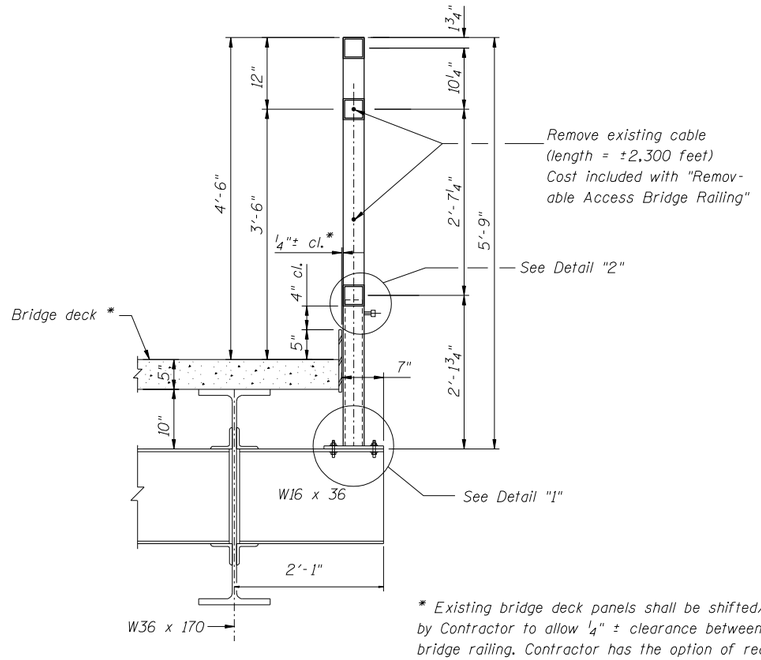

SECTION A-A

* Existing bridge deck panels shall be shifted/adjusted laterally by Contractor to allow 1/4" ± clearance between toe plate and bridge railing. Contractor has the option of reaming/slotting the existing holes in the top flange of the existing W16x36 and shifting existing posts to proper position in lieu of shifting bridge deck panels. Cost included with Removable Access Bridge Railing.

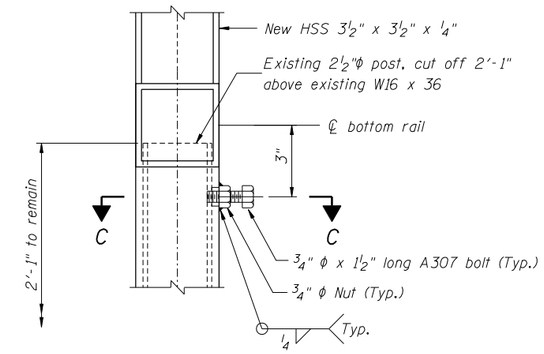

DETAIL "2"

NOTES

Railing shall be according to Section 509 of the Standard Specifications, except as noted, and will be paid for at the Contract Unit Price per foot for Removable Access Bridge Railing. 1

The 9 gauge fabric ties shall be according to Article 1006.27 (d) of the Standard Specifications.

Installation of the chain link fabric shall be according to Section 664 of the Standard Specifications.

Hollow structural sections shall conform to the requirements of ASTM designation A 500, Grade B, structural steel tubing.

All other steel shapes and plates shall conform to the requirements of AASHTO M 270 Grade 36.

The chain link fabric shall be placed along Pedestrian/Bicycle side as shown on Section B-B.

Stretcher bars shall be used at all four sides of each panel.

All posts, railing, splices, anchor devices, and bent plates shall be galvanized after shop fabrication according to AASHTO M 111 and ASTM A 385. All bolts, nuts, washers, and anchor rods shall be galvanized according to AASHTO M 232 except stainless steel bolts as noted.

Vent holes for galvanizing shall be placed in the posts and rails at locations that will not allow the accumulation of moisture in the members.

The chain link fabric shall conform to the requirements of Article 1006.27(a)(1)a, b or c of the Standard Specifications.

1 Contractor shall verify location of all existing posts prior to ordering Bridge Railing Panels. Adjustments shall be approved by the Engineer.

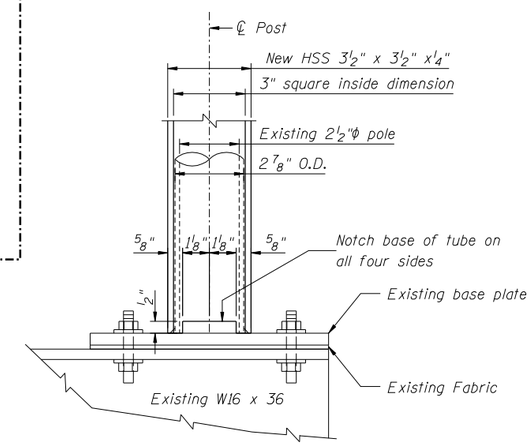

DETAIL "1"

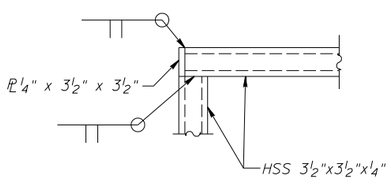

DETAIL A

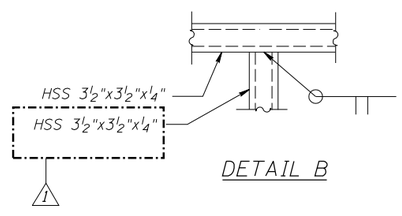

DETAIL B

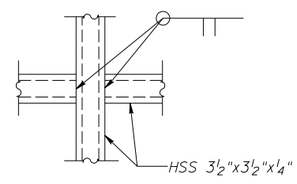

DETAIL C

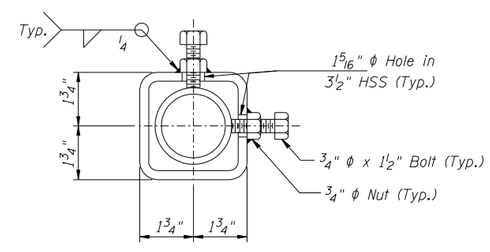

SECTION C-C

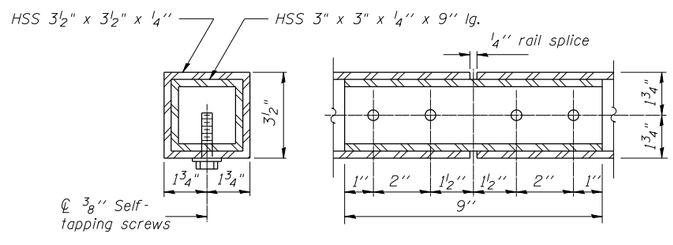

RAIL SPLICE

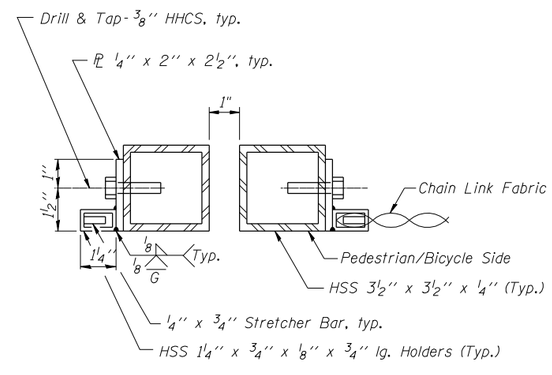

SECTION B-B

1 Revised 4/17/2006, TMM

BILL OF MATERIAL

Item	Unit	Quantity
Removable Access Bridge Railing	Foot	1,140 1

Designed By RLP Checked By TMM
Drawn By JJF Checked By TMM

$FILE$ $TIME$ $DATE$