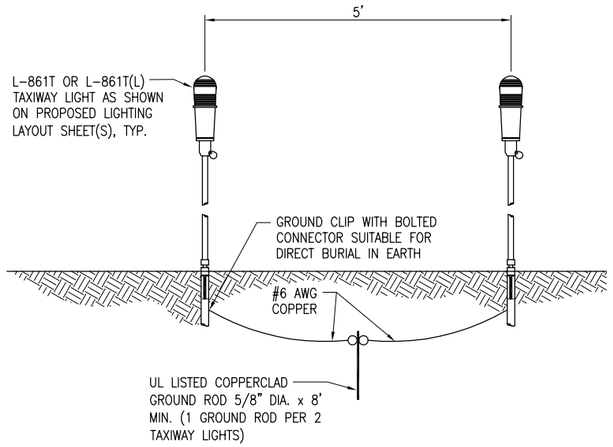

GROUNDING DETAIL FOR ADJACENT TAXIWAY LIGHTS

(NOT TO SCALE)

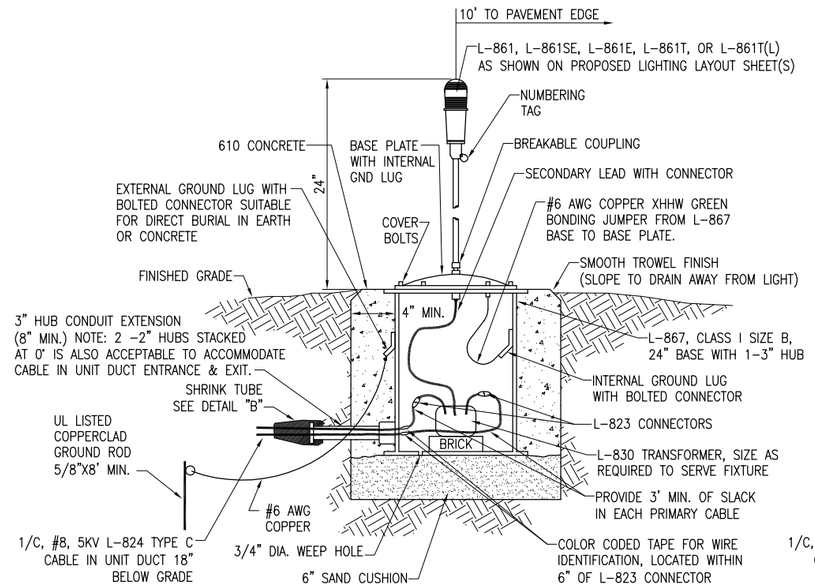

MEDIUM/HIGH INTENSITY LIGHT – BASE MOUNTED OPTION 1

(NOT TO SCALE)

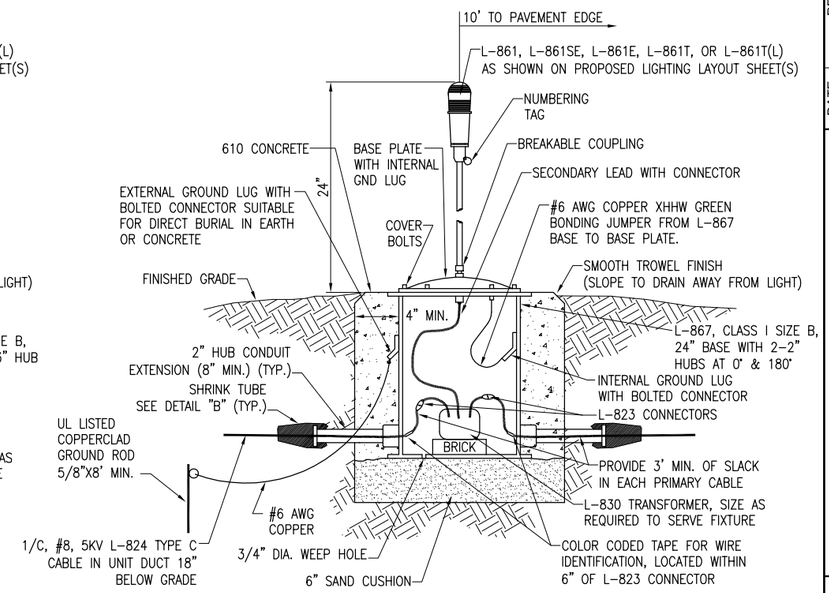

MEDIUM/HIGH INTENSITY LIGHT – BASE MOUNTED OPTION 2

(NOT TO SCALE)

NOTES

1. GROUNDING FOR RUNWAY LIGHTS, TAXIWAY LIGHTS, AND LIGHTED TAXI GUIDANCE SIGNS SHALL BE AS DETAILED ON THE PLANS AND AS SPECIFIED HEREIN. PER FAA AC 150/5340-30F DESIGN AND INSTALLATION DETAILS FOR AIRPORT VISUAL AIDS, CHAPTER 12, PART 12.6; A GROUND MUST BE INSTALLED AT EACH LIGHT FIXTURE. THE PURPOSE OF THE LIGHT BASE GROUND IS TO PROVIDE A DEGREE OF PROTECTION FOR MAINTENANCE PERSONNEL FROM POSSIBLE CONTACT WITH AN ENERGIZED LIGHT BASE OR MOUNTING STAKE THAT MAY RESULT FROM A SHORTED POWER CABLE OR ISOLATION TRANSFORMER. A LIGHT BASE GROUND SHALL BE INSTALLED AT EACH TRANSFORMER BASE/LIGHT CAN ASSOCIATED WITH RUNWAY LIGHTS, TAXIWAY LIGHTS, AND LIGHTED TAXI GUIDANCE SIGNS. A LIGHT BASE GROUND SHALL ALSO BE INSTALLED AT EACH STAKE MOUNTED LIGHT FIXTURE. A LIGHT BASE GROUND SHALL BE INSTALLED AND CONNECTED TO THE METAL FRAME OF EACH TAXI GUIDANCE SIGN AS DETAILED ON THE PLANS AND IN ACCORDANCE WITH THE RESPECTIVE TAXI GUIDANCE SIGN MANUFACTURER RECOMMENDATIONS. THE LIGHT BASE GROUND SHALL BE A #6 AWG BARE COPPER CONDUCTOR BONDED TO THE GROUND LUG ON THE RESPECTIVE L-867 TRANSFORMER BASE/LIGHT CAN OR MOUNTING STAKE AND A 5/8-INCH DIAMETER BY 8-FEET LONG (MINIMUM) UL LISTED COPPER CLAD GROUND ROD. CONNECTIONS TO GROUND LUGS ON THE L-867 TRANSFORMER BASE/LIGHT CAN OR MOUNTING STAKE SHALL BE WITH A UL LISTED GROUNDING CONNECTOR. CONNECTIONS TO GROUND RODS SHALL BE MADE WITH EXOTHERMIC WELD TYPE CONNECTORS, CADWELD BY ERICO PRODUCTS, INC., SOLON, OHIO, (PHONE: 800-248-9353), THERMOWELD BY CONTINENTAL INDUSTRIES, INC., TULSA, OKLAHOMA (PHONE: 918-663-1440), ULTRAWELD BY HARGER, GRAYSLAKE, ILLINOIS (PHONE: 800-842-7437), OR APPROVED EQUAL. EXOTHERMIC WELD CONNECTIONS SHALL BE INSTALLED IN CONFORMANCE WITH THE RESPECTIVE MANUFACTURER'S DIRECTIONS USING MOLDS AS REQUIRED FOR EACH RESPECTIVE APPLICATION. BOLTED CONNECTIONS WILL NOT BE PERMITTED AT GROUND RODS. TOP OF GROUND RODS SHALL BE BURIED 12 INCHES MINIMUM BELOW GRADE, UNLESS SPECIFIED OTHERWISE HEREIN, FOR RESPECTIVE APPLICATIONS

2. FOR BASE MOUNTED LIGHT FIXTURES THE LIGHT FIXTURE MUST BE BONDED TO THE LIGHT BASE INTERNAL GROUND LUG VIA A #6 AWG STRANDED COPPER WIRE RATED FOR 600 VOLTS WITH GREEN XHHW OR USE INSULATION. THE GROUND WIRE LENGTH MUST BE SUFFICIENT TO ALLOW THE REMOVAL OF THE LIGHT FIXTURE FROM THE LIGHT BASE FOR ROUTINE MAINTENANCE. SEE THE LIGHT FIXTURE MANUFACTURER'S INSTRUCTIONS FOR PROPER METHODS OF ATTACHING A BONDING WIRE.

3. FOR TAXIWAY LIGHTS THAT ARE SPACED WITH LESS THAN 10 FEET OF SEPARATION BETWEEN THEM PROVIDE ONE 5/8-INCH DIAMETER BY 8-FOOT LONG GROUND ROD PER TWO ADJACENT TAXIWAY LIGHTS.

4. STEEL USED TO MANUFACTURE GROUND RODS SHALL BE 100% DOMESTIC STEEL.

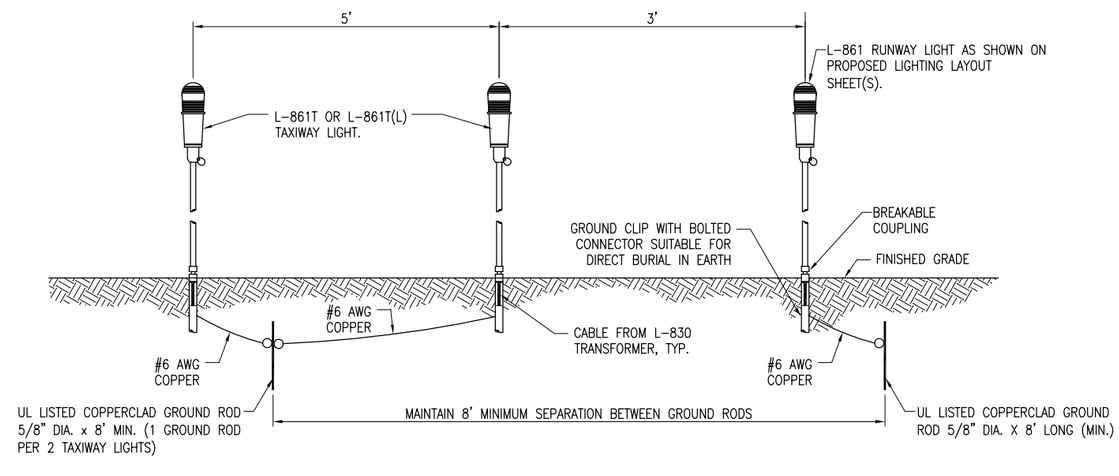

GROUNDING DETAIL FOR ADJACENT RUNWAY AND TAXIWAY LIGHTS

(NOT TO SCALE)

DATE	REVISION
03/08/12	UPDATE PER FAA PGL 12-2 & EB670

SHELBY COUNTY AIRPORT
SHELBYVILLE, ILLINOIS

A.I.P. PROJ.: 3-17-0093-B11

IL PROJ.: 2H0-4149

Hanson Proj. No. 10A0047
Filename
Scale NOT TO SCALE
Date 02/18/12

LAYOUT	KNL	01/17/12
DRAWN	CWS	01/18/12
REVIEWED	CAH/KNL	02/23/12

HANSON

©Copyright Hanson Professional Services Inc. 2012
Hanson Professional Services Inc.
1525 South Sixth Street
Springfield, Illinois 62703-2886
Ph: (217) 788-2450 Fax: (217) 788-2503
www.hansonInc.com
Offices Nationwide

CONSTRUCT VAULT, LIGHT TAXIWAY & INSTALL NAVAIDS

ELECTRICAL DETAILS SHEET 4

MAR 09, 2012 1:49 PM KINCAID394
E:\10JOBS\10A0047\10A0047D\CAD\AIRPORT\SHEET\E-504.DWG