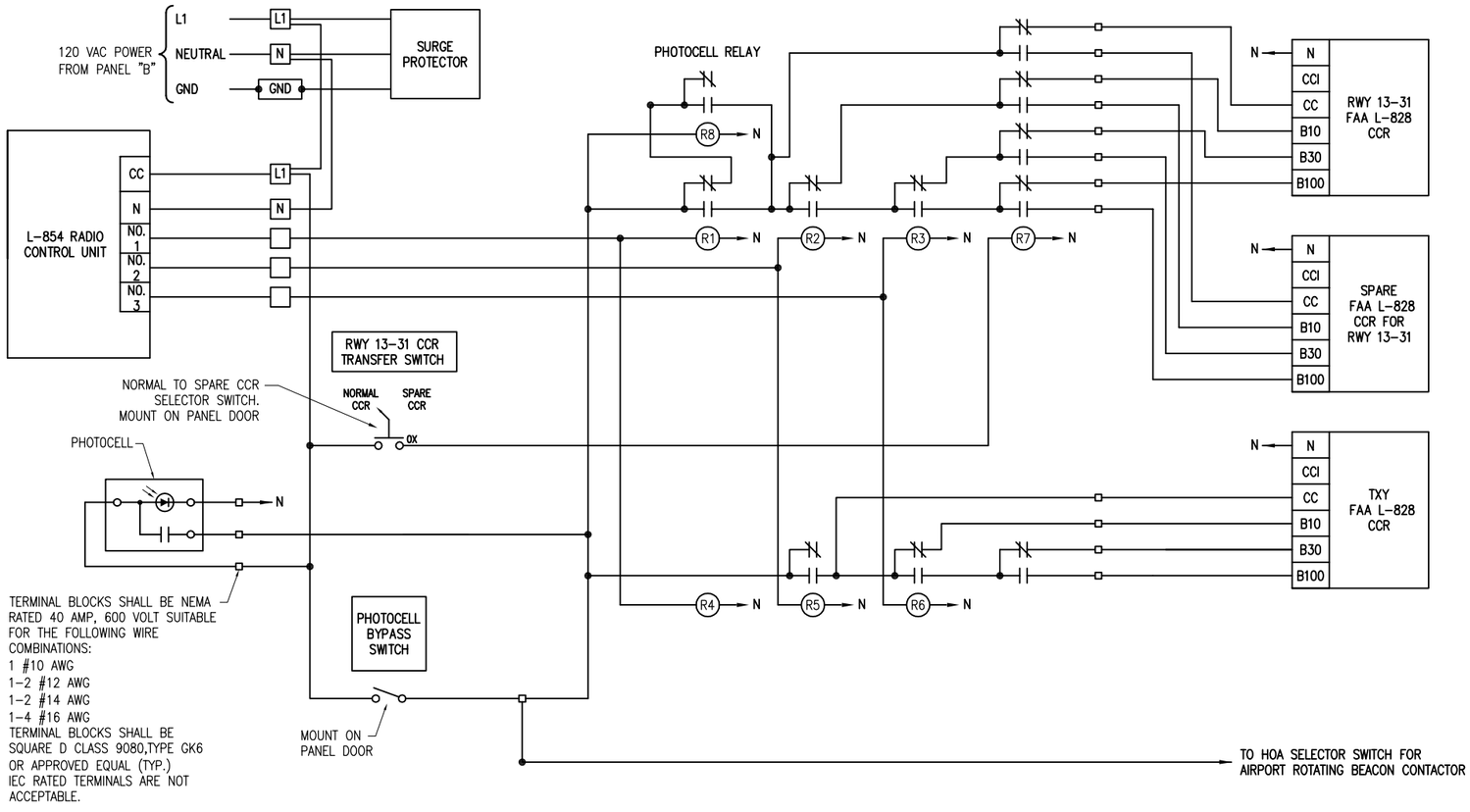

NOTES:

1. RELAY INTERFACE CONTROL PANEL SHALL BE MANUFACTURED BY AN FAA APPROVED L-821 PANEL BUILDER OR A UL 508 INDUSTRIAL CONTROL PANEL BUILDER, AND SHALL BE MANUFACTURED IN THE UNITED STATES TO COMPLY WITH THE AIRPORT IMPROVEMENT PROGRAM BUY AMERICAN REQUIREMENT AND THE "BUY AMERICAN ACT". RELAY INTERFACE CONTROL PANEL SHALL BE A SEPARATE PANEL. DO NOT COMBINE WITH LIGHTING CONTACTOR PANEL.
2. PANEL SHALL BE IN A NEMA 12 ENCLOSURE WITH HINGED COVER. DRILL HOLE IN BOTTOM OF ENCLOSURE TO ALLOW CONDENSATION TO ESCAPE.
3. EXTERNAL CONTROL CABLE SHALL BE NO. 12 AWG COPPER, 600 VOLT CABLE. ALL PANEL INTERIOR CONTROL CABLE SHALL BE MINIMUM 16 AWG, COPPER, 600 VOLT CABLE.
4. IN THE AUTOMATIC MODE OF OPERATION THE RUNWAY 13-31 CONSTANT CURRENT REGULATORS (PRIMARY UNIT & SPARE UNIT) SHALL BE CONTROLLED BY THE PHOTOCELL & THE L-854 RADIO CONTROL UNIT IN THE FOLLOWING MANNER:
   PHOTOCELL - 10% BRIGHTNESS & ACTIVATE RADIO CONTROL
   5 CLICKS - 30% BRIGHTNESS
   7 CLICKS - 100% BRIGHTNESS
5. IN THE AUTOMATIC MODE OF OPERATION THE TAXIWAY CIRCUIT WILL BE CONTROLLED BY THE PHOTOCELL & THE L-854 RADIO CONTROL UNIT IN THE FOLLOWING MANNER:
   PHOTOCELL -ACTIVATE RADIO CONTROL
   3 CLICKS -10% BRIGHTNESS
   5 CLICKS -30% BRIGHTNESS
   7 CLICKS -100% BRIGHTNESS
6. IN THE AUTOMATIC MODE OF OPERATION THE AIRPORT ROTATING BEACON SHALL BE ACTIVATED BY THE PHOTOCELL OR PHOTOCELL BYPASS SWITCH.
7. EQUIPMENT GROUND WIRES SHALL BE INCLUDED WITH EACH BRANCH CIRCUIT & EACH CONTROL CIRCUIT.
8. INCLUDE PHOTOCELL BYPASS SWITCH.
9. SURGE PROTECTOR SHALL BE UL LISTED PER UL 1449, SUITABLE FOR 120 VAC, 1PH, 2 WIRE PLUS GROUND SYSTEM WITH SURGE CURRENT RATING OF 40 KA (MIN.), 8x20 MICROSECOND WAVE, AND STATUS INDICATION LIGHTS IN A WEATHERPROOF HOUSING, JOSLYN MODEL 1260-21, OR APPROVED EQUAL. MAINTAIN LEADS AS SHORT & AS STRAIGHT AS POSSIBLE. INCLUDE MOUNTING BRACKET.
10. INCLUDE EQUIPMENT GROUND BAR, ILSCO D167-12 OR EQUAL.
11. CONTROL RELAYS SHALL HAVE 10 AMP CONTACT RATINGS AT 240 VAC WITH 120 VAC COILS. PROVIDE 3 SPARE RELAYS FOR EACH TYPE USED IN THE RELAY INTERFACE PANEL.
12. COLOR CODING FOR THE CONTROL WIRING TO EACH CONSTANT CURRENT REGULATOR SHALL BE CONSISTENT FOR ALL REGULATORS. COLOR CODING SHALL BE AS FOLLOWS:
   CC -RED
   10% -ORANGE
   30% -YELLOW
   100% -BLUE
   NEUTRAL -WHITE
   EQUIPT. GND -GREEN
   ALSO TAG THE CONTROL WIRES WITH THE RESPECTIVE DESIGNATION (CC, 10%, 30%, 100%)
13. "N" DESIGNATES NEUTRAL CONNECTION OR NEUTRAL CONDUTOR.

AIRFIELD LIGHTING CONTROL WIRING SCHEMATIC

REVISION	DATE

JOLIET REGIONAL AIRPORT
JOLIET PARK DISTRICT
JOLIET, ILLINOIS

A.I.P. PROJ.: 3-17-0056-B8
IL. PROJ.: JOT-4166

Hanson Project No. 09A0177D-0001
Filename E-603-SCM.dwg
Scale NONE
Date 02/13/12

LAYOUT	KNL	01/13/12
DRAWN	MLH	01/28/12
REVIEWED	KNL/CAH	02/13/12

HANSON

© Copyright Hanson Professional Services Inc. 2012
Hanson Professional Services Inc.
1525 South Sixth Street
Springfield, Illinois 62703-2886

AIRFIELD LIGHTING CONTROL WIRING SCHEMATIC

CONSTRUCT A STAND ALONE ELECTRICAL VAULT, REPLACE RUNWAY LIGHTS AND INSTALL TAXIWAY LIGHTS

MAR 12, 2012 2:44 PM KINCA00394
pw:\\sgi-svr306.hanson.dom:Hanson Projects\Documents\09Jobs\09A0177\09A0177D\CAD\Airport\Sheet\E-603-SCM