Illinois Department of Transportation
Division of Highways
District Nine Materials

SOIL BORING LOG

Page 1 of 1

Date 3-3-11

ROUTE FAP Rte 885 DESCRIPTION FAP 885 (IL 146) over Big Grand Pierre Creek LOGGED BY R. Moberly

SECTION 6B-DR LONGITUDE LATITUDE

COUNTY Pope DRILLING METHOD HAMMER TYPE

STRUCT. NO. 076-0002
Station 1259 + 03.51

BORING NO. 3-S
Station 1258 + 50
Offset 44.00ft Lt.
Ground Surface Elev. 338.0 ft

Surface Water Elev. 336.5 ft
Stream Bed Elev. ft

Groundwater Elev.:
First Encounter ft
Upon Completion ft
After Hrs. ft

Description	Elev. (ft)	DEPTH (ft)	BLOWS (6")	UCS Qu (tsf)	MOIST (%)
Augered to bedrock					
		-5			
	328.0	-10			
Cored 10.0 to 15.0 feet 100% Recovery: 35% RQD Very dense, dry, grey, Sandstone					
	323.0	-15			
Cored 15.0 to 20.0 feet 100% Recovery: 52% RQD Very dense, dry, grey, Sandstone					
	318.0	-20			
Cored 20.0 to 25.0 feet 90% Recovery: 42% RQD Very dense, dry, grey, Sandstone					
	313.0	-25			
Cored 25.0 to 30.0 feet 87% Recovery: 17% RQD Hard, dry, grey, Limestone (drilled hard and slow)					
	308.0	-30			
Bottom of hole = 30.0 feet Free water observed at 10.0 feet Elevation referenced to BM @ NW wingwall; Elev. = 358.9 feet Borehole advanced with hollow stem auger (8" O.D., 3.25" I.D.)					
		-35			
		-40			

The Unconfined Compressive Strength (UCS) Failure Mode is indicated by (B-Bulge, S-Shear, P-Penetrometer)
The SPT (N value) is the sum of the last two blow values in each sampling zone (AASHTO T206)

BBS, form 137 (Rev. 11-11)

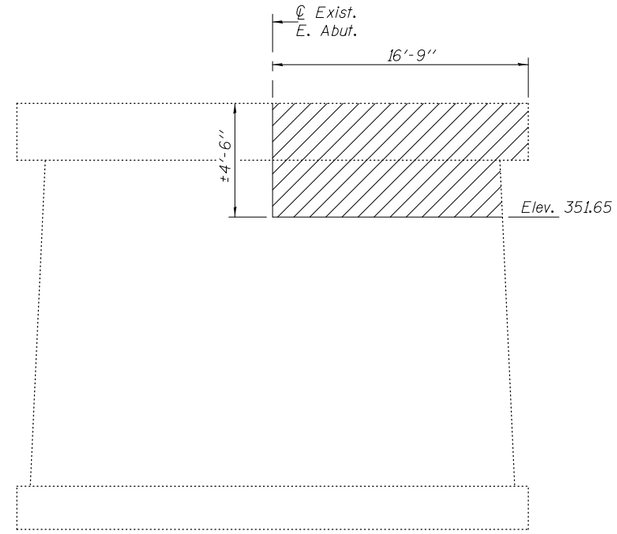

ELEVATION - EXISTING EAST ABUTMENT
(Looking east)

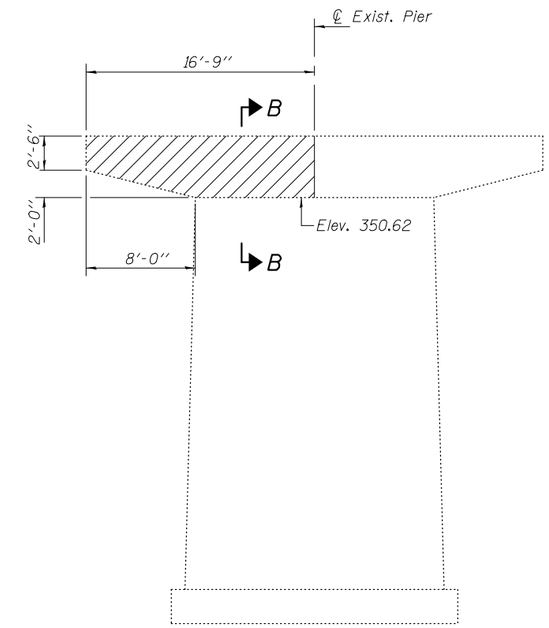

ELEVATION - EXISTING PIER
(Looking west)

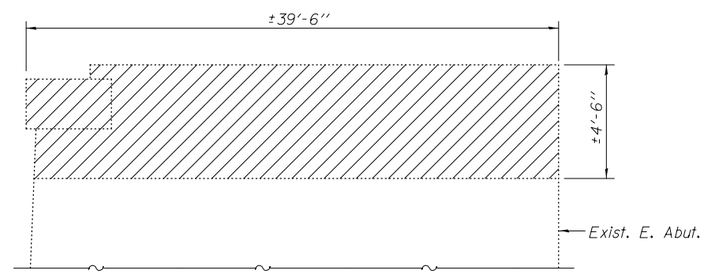

VIEW A-A

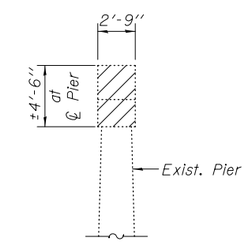

SECTION B-B

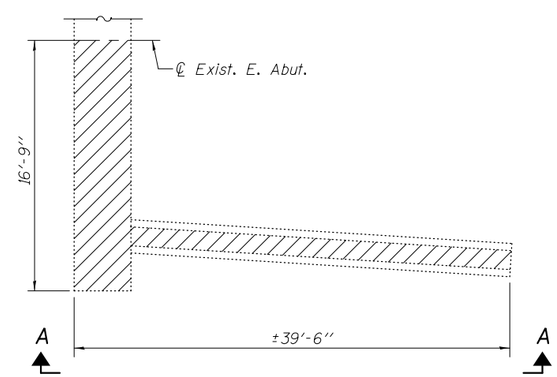

PARTIAL PLAN - EXISTING EAST ABUTMENT

Hatched areas indicate the maximum portion of the existing east abutment and the existing pier that may be removed during Stage I Removal to allow Stage II Construction. Remaining portions of existing east abutment and existing pier shall be removed during Stage II Removal. Cost included with Removal of Existing Structures.

DESIGNED - Nicholas R. Barnett	EXAMINED Thomas J. Domagalski ENGINEER OF BRIDGE DESIGN	DATE - MARCH 20, 2012	STATE OF ILLINOIS DEPARTMENT OF TRANSPORTATION
CHECKED - Michael D. Rolape			
DRAWN - h.t. duong	PASSED D. Carl Puntney ENGINEER OF BRIDGES AND STRUCTURES	REVISED	
CHECKED - NRB/MDR		REVISED	

SOIL BORING LOGS & CONCRETE REMOVAL DETAILS
STRUCTURE NO. 076-0031
SHEET NO. 25 OF 25 SHEETS

F.A.P. RTE.	SECTION	COUNTY	TOTAL SHEETS	SHEET NO.
885	6B-2	POPE	51	40b
		CONTRACT NO. 78168		
		ILLINOIS FED. AID PROJECT		