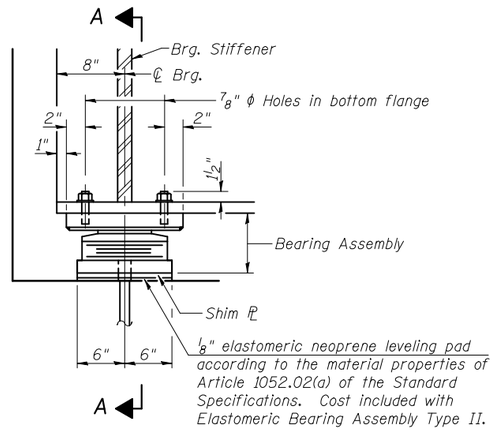

ELEVATION

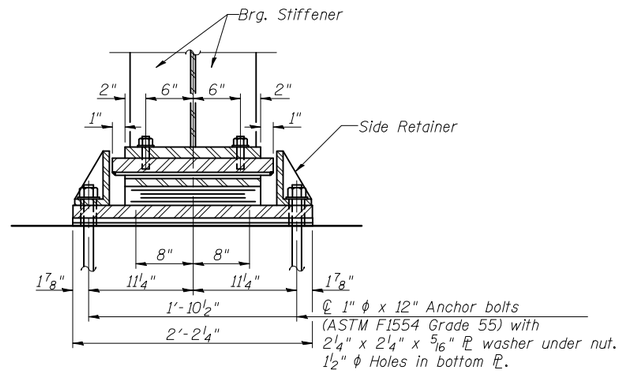

SECTION A-A

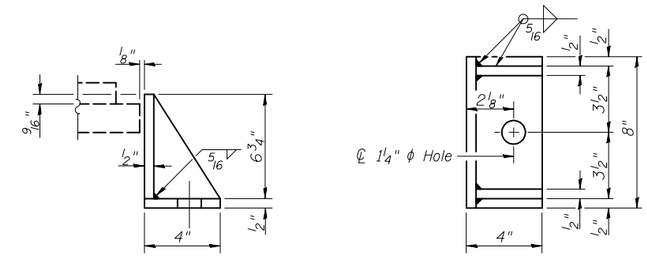

SIDE RETAINER ⑩

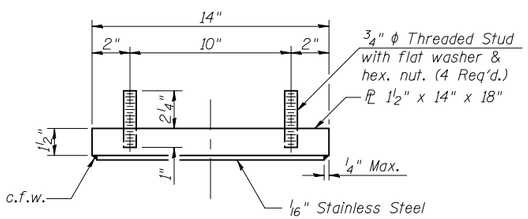

TOP BEARING ASSEMBLY

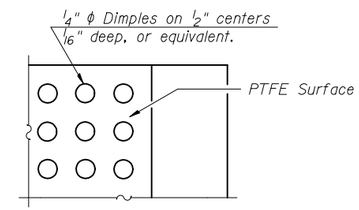

PLAN-PTFE SURFACE

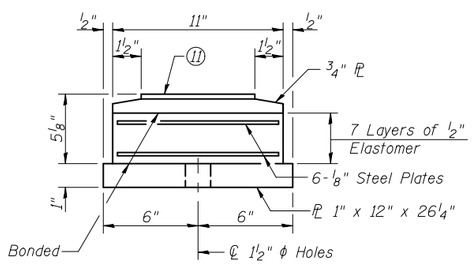

BOTTOM BEARING ASSEMBLY

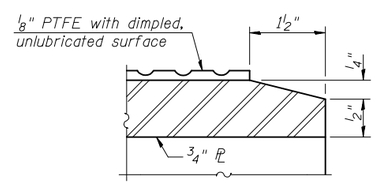

SECTION THRU PTFE

TYPE II ELASTOMERIC EXP. BRG.
(EAST & WEST ABUTMENTS)

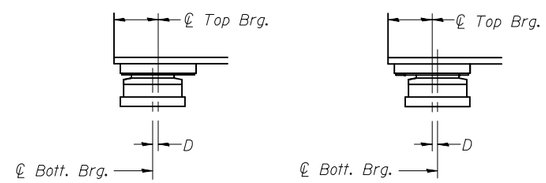

BELOW 50°F. (Move bott. brg. away from fixed brg.)

ABOVE 50°F. (Move bott. brg. toward fixed brg.)

SETTING ANCHOR BOLTS AT EXP. BRG.

D= 1/8" per each 100' of expansion for every 15° temp. change from the normal temp. of 50°F. Design Expansion Lengths are: E. Abut. = 272'
W. Abut. = 187'

Notes:

1. Anchor bolts shall be ASTM F1554 all-thread or an Engineer-approved alternate material of the grade and diameter specified. The corresponding specified grade of AASHTO M314 anchor bolts may be used in lieu of ASTM F1554.
2. Anchor bolts for Type II bearings shall be placed in holes drilled in the concrete through holes in the bottom bearing plate after members are in place. Side retainers shall be placed after bolts are installed.
3. Drilled and set anchor bolts shall be installed according to Article 521.06 of the Standard Specifications.
4. Side retainers and other steel members required for the elastomeric bearing assembly shall be included in the cost of Elastomeric Bearing Assembly, Type II.
5. The 1/8" PTFE sheet shall be bonded directly to the top steel plate with a two-component, medium viscosity epoxy resin, conforming to the requirements of the Federal Specification MMM-A-134, Type I. The bond agent shall be applied on the full area of the contact surfaces.
6. Bonding of 1/8" PTFE sheet during vulcanizing process will be permitted provided the process and method of adjusting assembly height is approved by the Engineer.
7. The structural steel plates of the Bearing Assembly shall conform to the requirements of AASHTO M 270 Grade 50W.
8. Two 1/8" adjusting shims shall be provided for each bearing in addition to all other plates or shims and placed as shown on bearing details.
9. The anchor bolt sizes and grades shown constitute a calculated seismic structural fuse. Substitution of higher diameter and/or grade anchor bolts will not be allowed.
10. Equivalent rolled angle with stiffeners will be allowed in lieu of welded plates.
11. 1/8" PTFE dimpled, unlubricated.

BILL OF MATERIAL

Item	Unit	Total
Elastomeric Bearing Assembly Type II	Each	12
Anchor Bolts, 1"	Each	24

ILLINOIS
Eastport Business Center 1
100 Lantar Court, Suite 1
Collinsville, IL 62234
tel 618.345.2200
fax 618.345.7233

MISSOURI
Laclede Gas Building
720 Olive, Suite 1050
St. Louis, MO 63101
tel 314.588.8081
fax 314.588.9605

BATES ASSOCIATES
Engineering • Architecture
www.batesassociates.com

USER NAME =	DESIGNED - JAD	REVISED -	
	CHECKED - DGL	REVISED -	
PLOT SCALE =	DRAWN - JAD	REVISED -	
PLOT DATE =	CHECKED - DGL	REVISED -	

STATE OF ILLINOIS
DEPARTMENT OF TRANSPORTATION

BEARING DETAILS
STRUCTURE NO. 036-0076 (W.B.)

SHEET NO. 30 OF 53 SHEETS

F.A.P. RTE.	SECTION	COUNTY	TOTAL SHEETS	SHEET NO.
331	(12-1)B-1	JACKSON	200	142
		CONTRACT NO. 78056		
	ILLINOIS	FED. AID PROJECT		