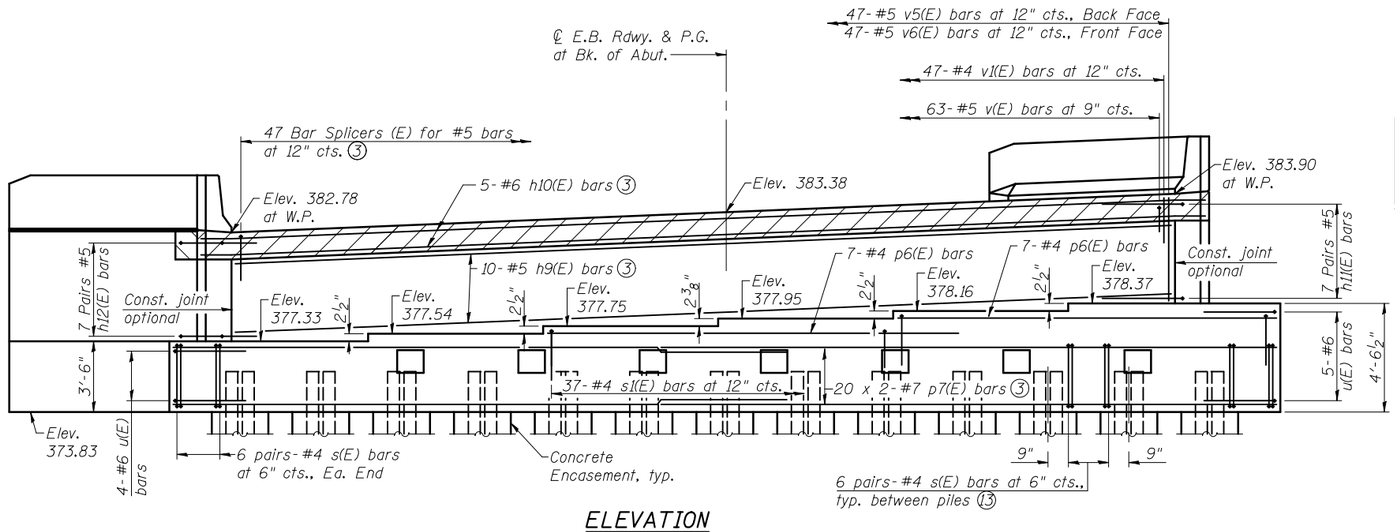

ELEVATION

MIN. BAR LAP

#4 bar = 2'-11"
#7 bar = 5'-10"

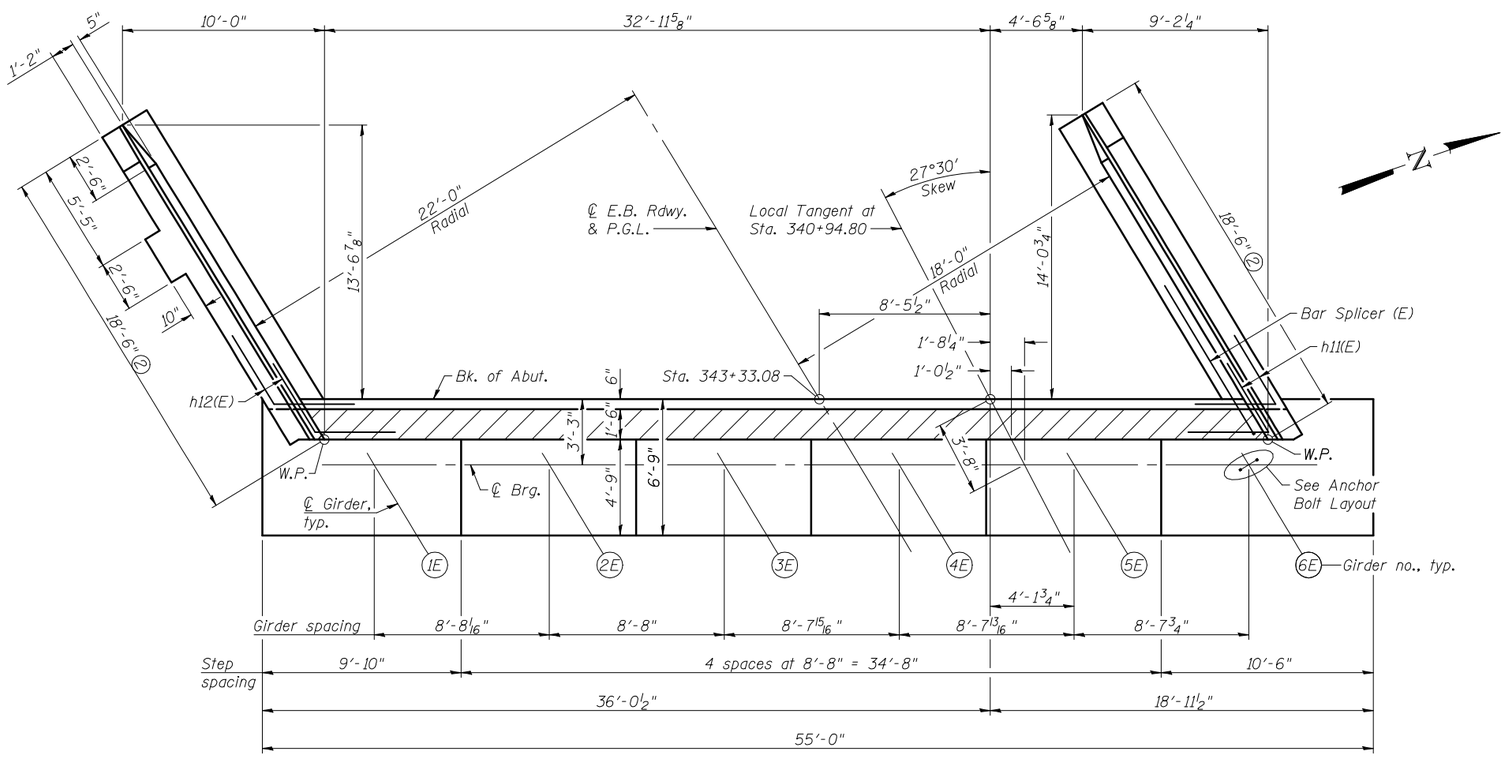

TOP VIEW

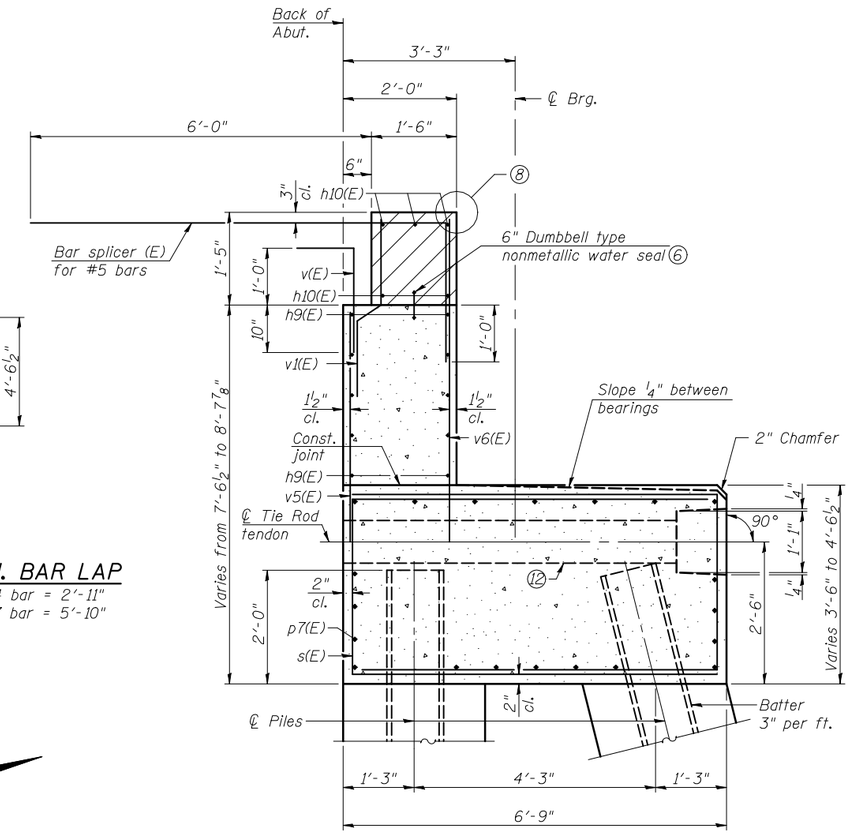

SEC. THRU ABUT.

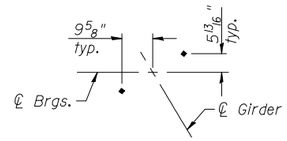

ANCHOR BOLT LAYOUT (4)

Notes:

(1) For details of Bar Splicers, see sheet 47 of 53.
(2) Wingwall length is along front face of end post.
(3) For bar locations, see Sec. Thru Abut.
(4) Space reinforcement in cap to miss anchor bolts.
(5) Hatched area to be poured after superstructure falsework has been removed. Cost of concrete included with Concrete Superstructure on sheet 17 of 53.
(6) 6" Dumbbell type nonmetallic water seal shall be in accordance with Sections 503.12 and 1054 of the Standard Specifications. Cost included with Concrete Structures.
(7) Pour steps monolithically with cap.
(8) For Expansion Joint details, see sheet 24 of 53.
(9) Expansion joint details for skews greater than 30°, as shown on sheet 24 of 53, are applicable for the West Abutment.
(10) The abutments shall have all exposed surfaces of backwalls, bridge seats, and front faces of pile caps treated with Concrete Sealer.
(11) Bars indicated thus 20 x 2-#7 etc. indicates 20 lines of bars with 2 lengths per line.
(12) Round HSS blockouts cast into cap for Tie Rod. For additional details, see sheet 37 of 53.
(13) Adjust orientation of pairs of s(E) bars as needed to miss piles and round HSS blockouts by varying bar lap.

BATES ASSOCIATES Engineering • Architecture
ILLINOIS: Eastport Business Center 1, 100 Lanter Court, Suite 1, Collinsville, IL 62234, tel 618.345.2200, fax 618.345.7235
MISSOURI: Laclede Gas Building, 720 Olive, Suite 1660, St. Louis, MO 63101, tel 314.588.8581, fax 314.588.9005
www.batesassociates.com

USER NAME =	DESIGNED - JAD	REVISED -	
	CHECKED - DGL	REVISED -	
PLOT SCALE =	DRAWN - JAD	REVISED -	
PLOT DATE =	CHECKED - MAG	REVISED -	

STATE OF ILLINOIS
DEPARTMENT OF TRANSPORTATION

WEST ABUTMENT DETAILS
STRUCTURE NO. 039-0075 (E.B.)

SHEET NO. 36 OF 53 SHEETS

F.A.P. RTE.	SECTION	COUNTY	TOTAL SHEETS	SHEET NO.
331	(12-1)B-1	JACKSON	200	95
		CONTRACT NO. 78056		
		ILLINOIS FED. AID PROJECT		