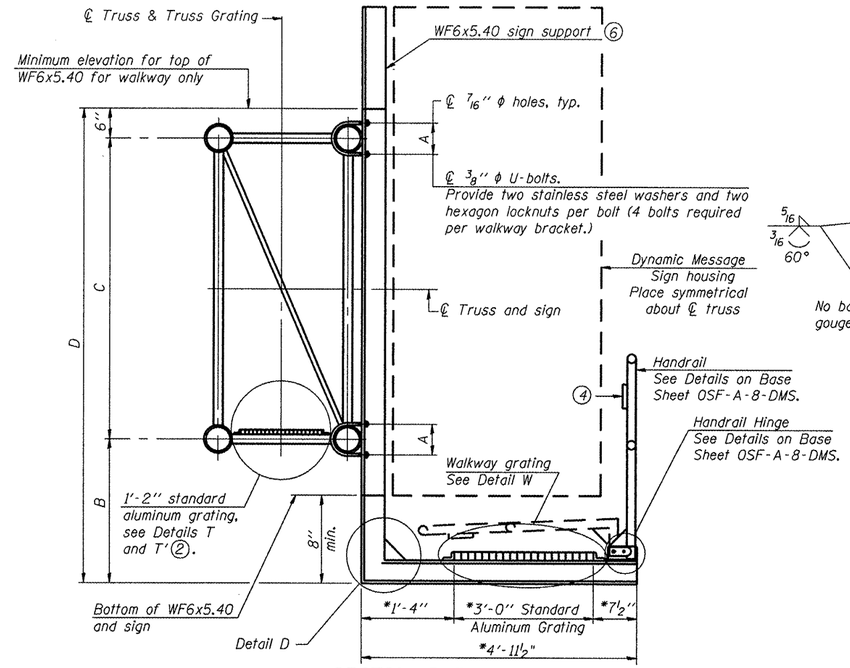

SECTION B-B

* Bracket and grating dimensions are nominal and will vary based on actual DMS cabinet dimensions plus manufacturers mounting device.

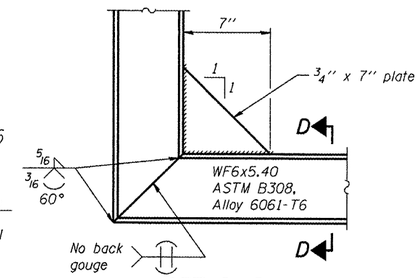

DETAIL D

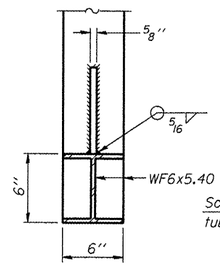

SECTION D-D

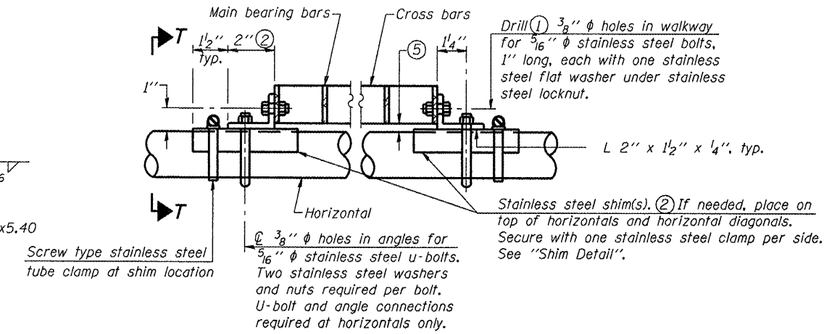

DETAIL T
(Continuous Truss grating)

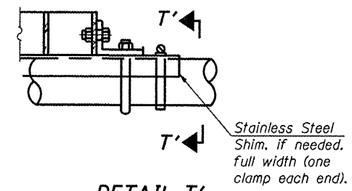

DETAIL T'
(Truss grating splice)
Details not shown same as Detail T.
Alternate materials may be used subject to the Engineer's review and approval.

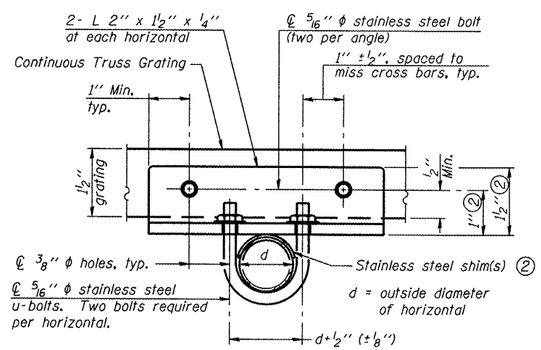

SECTION T-T

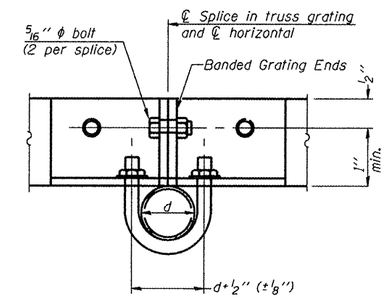

SECTION T'-T'

Drill (1) 3/8" ϕ holes in walkway for 5/16" ϕ stainless steel bolts, 1" long, each with one stainless steel washer and 2 stainless steel flat washers.

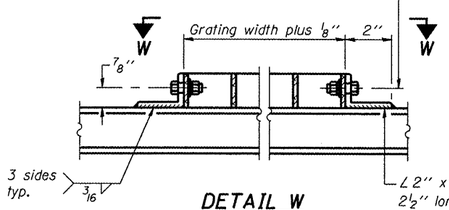

DETAIL W
(Walkway grating)

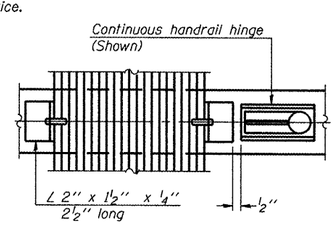

(CONTINUOUS WALKWAY GRATING)

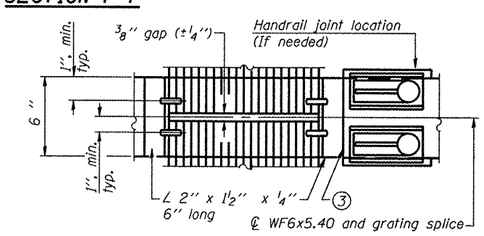

(AT WALKWAY GRATING SPLICE)

SECTION W-W

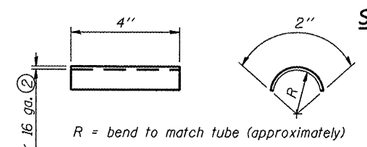

SHIM DETAIL

SPECIFICATIONS FOR STANDARD ALUMINUM GRATING

Main Bearing Bars (MBB) shall be 3/16" x 1 1/2" on 1 3/16" centers and conform to ASTM B211 Alloy 6061-T6.

Cross bars (CB) shall be 3/16" x 1 1/2" on 4" centers and conform to ASTM B221 Alloy 6063-T5 or 6061-T6.

OR

Aluminum Grating with modified "t" sections for main bearing bars shall meet the following requirements:

Main bars shall conform to ASTM B221 Alloy 6061-T6 and have a minimum section modulus equal to 0.0705 in.^{3} per bar, a depth of 1 1/2", spaced on 1 3/16" centers.

Cross bars shall conform to ASTM B221 Alloy 6063-T5 or T-42 and spaced on 4" centers.

(1) Drilling holes in grating may be done in shop or field, based on Contractor's preference and subject to accurate alignment.

(2) Stainless steel shims shall be placed as shown in Detail T <u>if needed</u> to compensate for alignment variations between horizontal and diagonal pipes beyond adjustment provided by angles. Thicker shims may be used subject to shims performing properly.

(3) If Handrail Joint present, weld angle to WF(A-N)4 and 1/4" extension bars. (See Base Sheet OSF-A-8)

(4) PL 1/8" x 1/2" x 2" welded to handrail posts to protect locations that contact grating.

(5) Tube to grating gap may very from 0 to 1/2" max. to align walkway, allow for camber, etc.

(6) Cabinet manufacturer must design and supply hardware for connection of cabinet to WF6's. Bolts must be stainless steel or hot dip galvanized high strength per IDOT specifications.

(7) Based on actual sign height, Ds, given on OSF-A-1-DMS.

Structure Number	Station	A	(7) B	C	(7) D
3F0501039R052.6	701+50	7 1/2"	1'-8"	7'-0"	9'-2"
3F0501039L057.6	965+00	7 1/2"	1'-8"	7'-0"	9'-2"
3F0501080L083.6	130+00	7 1/2"	1'-8"	7'-0"	9'-2"

OSF-A-7-DMS 1-20-11

FILE NAME = c:\pw_work\pwidot\pately\d0250292\D366828-sht-details.DGN	USER NAME = pately	DESIGNED -	REVISED -
	PLOT SCALE = 99.9999 ' / in.	DRAWN -	REVISED -
	PLOT DATE = 2/23/2012	CHECKED -	REVISED -
		DATE -	REVISED -

STATE OF ILLINOIS
DEPARTMENT OF TRANSPORTATION

BUTTERFLY SIGN STRUCTURES – ALTERNATE WALKWAY
DETAILS FOR DMS – ALUMINUM TRUSS & STEEL POST

SCALE: ____ SHEET NO. 1 OF 1 SHEETS STA. ____ TO STA.

F.A.I. RTE.	SECTION	COUNTY	TOTAL SHEETS	SHEET NO.
VAR	D3 OVD MESSAGE SG - 2012	VAR	50	37
		CONTRACT NO. 66B28		
	ILLINOIS			