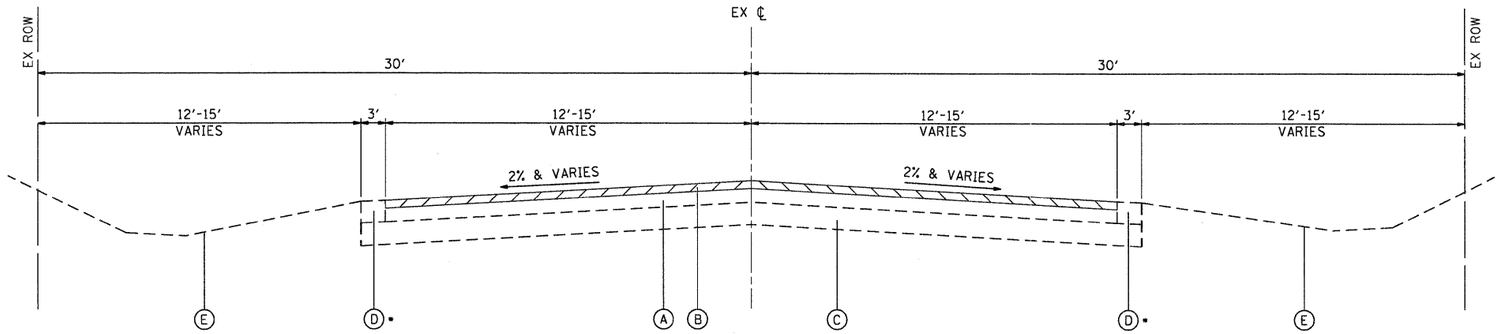

EXISTING TYPICAL SECTION
EAST WONDER LAKE ROAD

STA 102+36 TO STA 146+24

EXISTING TYPICAL SECTION
THOMPSON ROAD

STA 301+00 TO STA 361+99

DENOTES AREA OF HOT-MIX ASPHALT SURFACE REMOVAL

NOTES:
• EX CONC GUTTER:
STA 331+33 LT TO STA 332+89 LT
STA 341+41 RT TO STA 344+72 RT
STA 341+75 LT TO STA 343+67 LT
STA 344+34 LT TO STA 345+56 LT

EXISTING LEGEND

- (A) HOT-MIX ASPHALT PAVEMENT; DEPTH 8"±
- (B) HOT-MIX ASPHALT SURFACE REMOVAL, 1 INCH
- (C) AGGREGATE SUBBASE; 12"±
- (D) AGGREGATE SHOULDERS
- (E) EXISTING GROUND

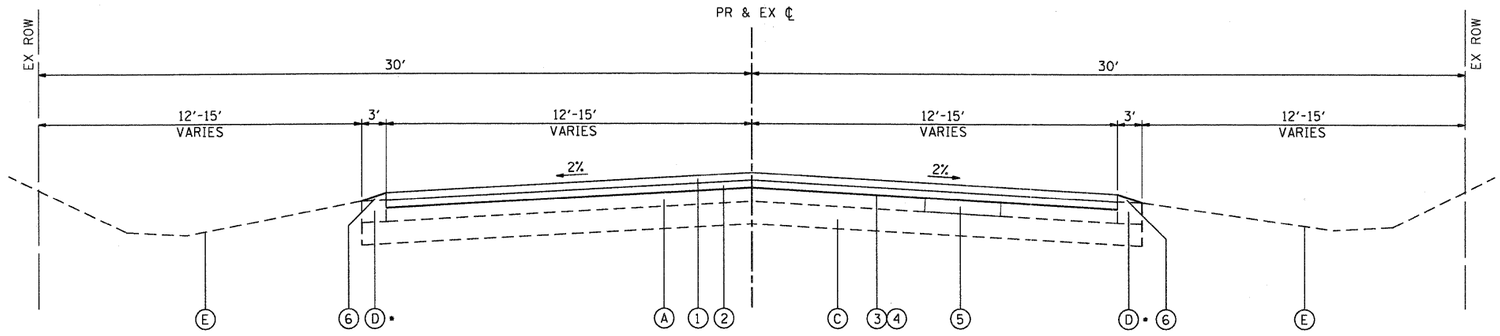

PROPOSED TYPICAL SECTION
EAST WONDER LAKE ROAD

STA 102+36 TO STA 146+24

PROPOSED TYPICAL SECTION
THOMPSON ROAD

STA 301+00 TO STA 361+99

NOTES:
• EX CONC GUTTER:
STA 331+33 LT TO STA 332+89 LT
STA 341+41 RT TO STA 344+72 RT
STA 341+75 LT TO STA 343+67 LT
STA 344+34 LT TO STA 345+56 LT

PROPOSED LEGEND

1. HOT-MIX ASPHALT SURFACE COURSE, MIX "D", N50; 1 $\frac{1}{2}$"
2. LEVELING BINDER (MACHINE METHOD), N50; 3/4"
3. BITUMINOUS MATERIALS (PRIME COAT)
4. AGGREGATE (PRIME COAT)
5. CLASS D PATCHES, 8 INCH (AS DIRECTED BY THE ENGINEER)
6. AGGREGATE SHOULDERS, TYPE B (9% MAX SLOPE)

HOT-MIX ASPHALT MIXTURE REQUIREMENTS

MIXTURE TYPE	AIR VOIDS @ Ndes
PAVEMENT RESURFACING	
HOT-MIX ASPHALT SURFACE COURSE, MIX "D", N50 (IL-9.5mm); 1 1/2"	4% @ 50 GYR
LEVELING BINDER (MACHINE METHOD), N50 (IL-9.5mm); 3/4"	4% @ 50 GYR
PATCHING	
CLASS D PATCH, (HMA BINDER IL-19mm); 8" (PLACED IN TWO LIFTS)	4% @ 70 GYR.
DRIVEWAY	
HOT-MIX ASPHALT SURFACE COURSE, MIX "D", N50 (IL-9.5mm); 3"	4% @ 50 GYR.

THE UNIT WEIGHT TO CALCULATE ALL HMA SURFACE MIXTURE QUATITIES IS 112 LBS/SQ YD/IN
THE "AC TYPE" FOR POLYMERIZED HMA MIXES SHALL BE "SBS/SBR PG 76-22" AND FOR NON-POLYMERIZED HMA THE "AC TYPE" SHALL BE "PG 64-22" UNLESS MODIFIED BY DISTRICT ONE SPECIAL PROVISIONS.
FOR PERCENT OF RAP SEE DISTRICT ONE SPECIAL PROVISIONS.
THE CONTRACTOR SHALL MILL BEFORE PATCHING.
THE SURFACE COURSE SHALL BE INSTALLED 1/4" ABOVE THE GUTTER FLAG.