ROUTE	SECTION	COUNTY	TOTAL SHEETS	SHEET NUMBER
VARIOUS	2011-227-I	MCHENRY	53	30

CONTRACT NO. 60R91

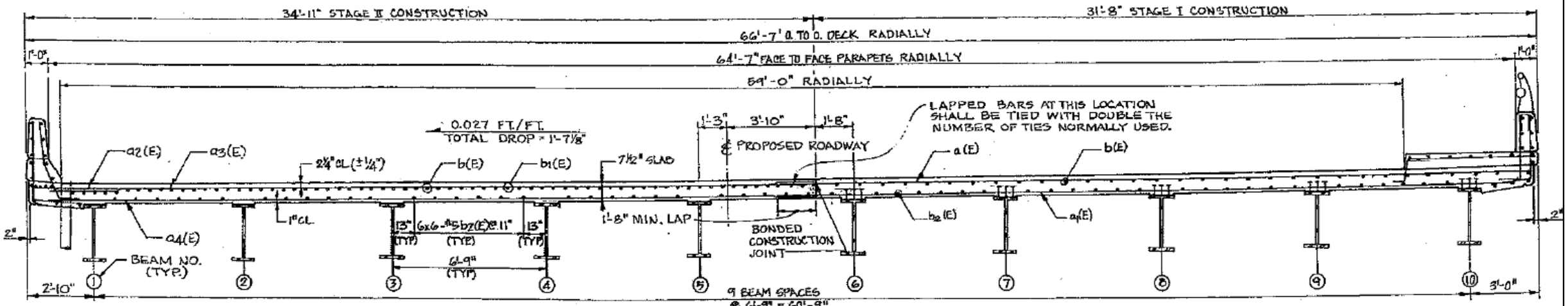

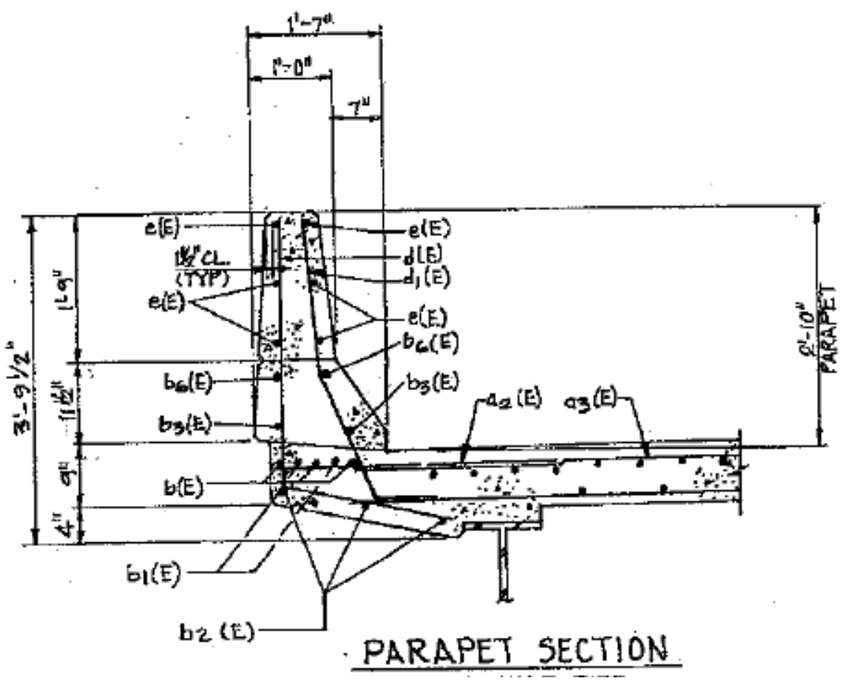

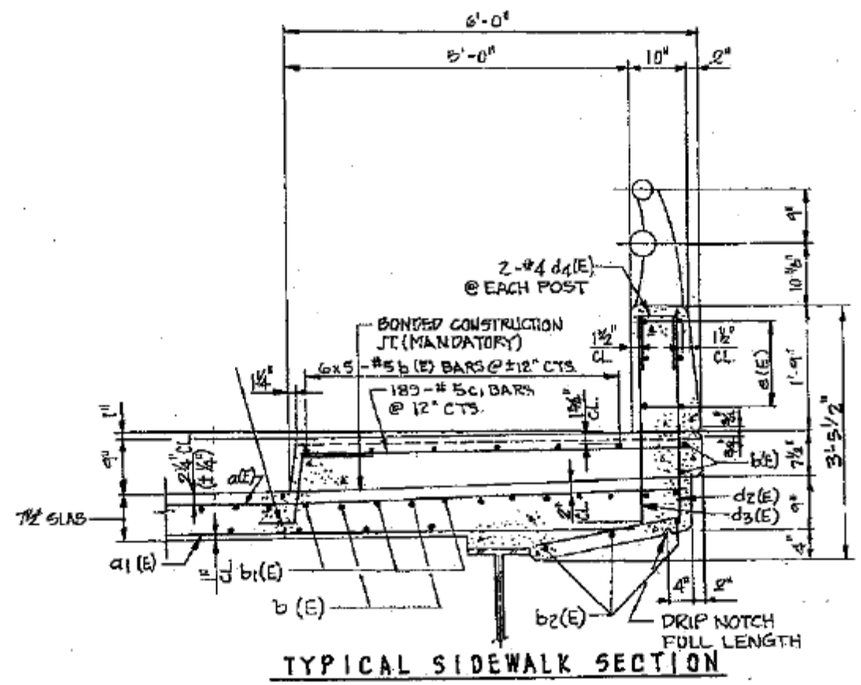

FOR INFORMATION ONLY

ILLINOIS DEPARTMENT OF TRANSPORTATION

EXISTING PLAN & CROSS SECTION
LOCATION 6 (SN 056-0020)
US 12 OVER NIPPERSINK CR OVERFL
SHEET 2 OF 2