STATE OF ILLINOIS
DEPARTMENT OF TRANSPORTATION

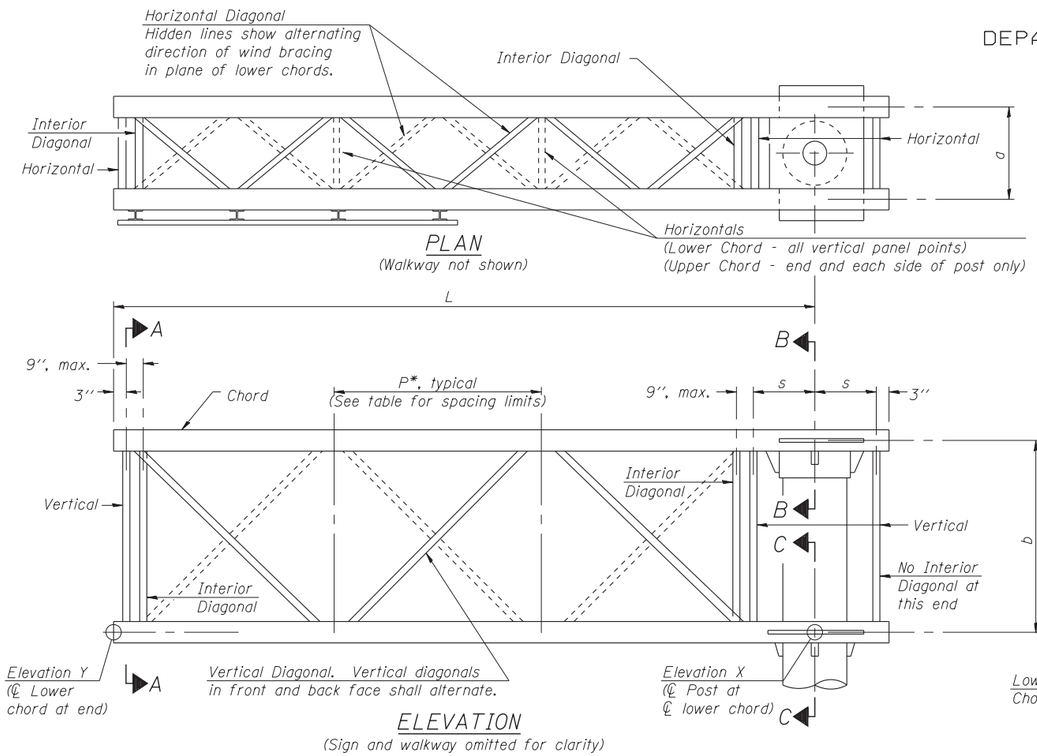

PLAN
(Walkway not shown)

ELEVATION
(Sign and walkway omitted for clarity)

TYPICAL TRUSS UNIT

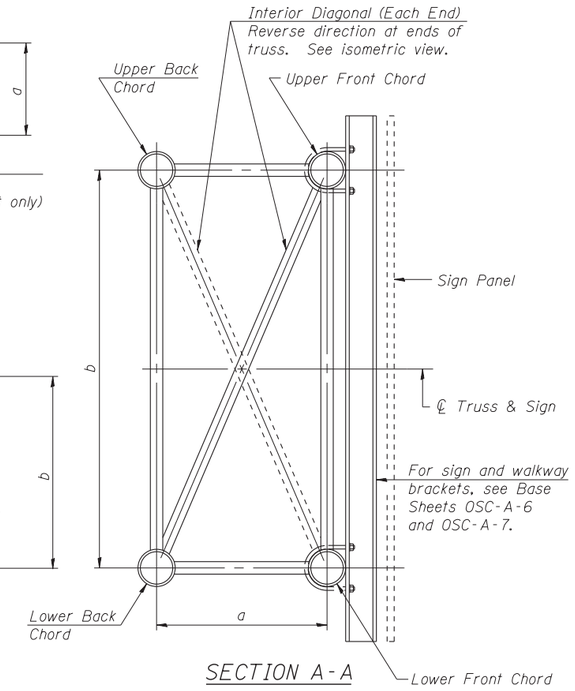

SECTION A-A

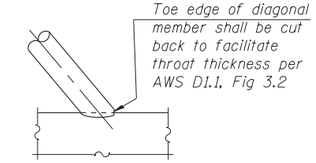

DETAIL A

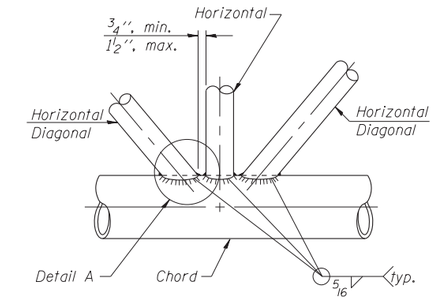

TRUSS INTERIOR JOINT DETAIL

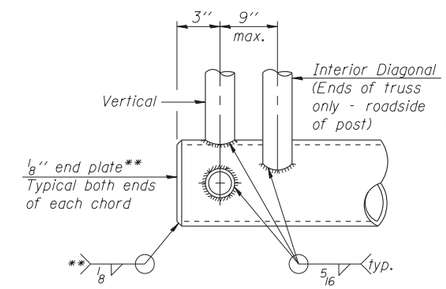

CANTILEVER END JOINT DETAIL
** Contractor may alternatively use standard aluminum drive-fit cap to close ends.

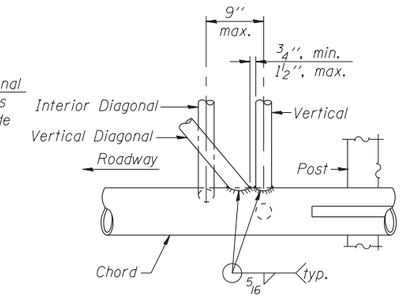

POST END JOINT DETAIL

Note:
For Section B-B and Section C-C, see Base Sheet OSC-A-3.
There are twice as many horizontal diagonals as there are vertical diagonals.

TRUSS UNIT TABLE

Truss Type	Dimension "a"	Dimension "b"	Dimension "s"	Limits for Panel Spacing (P)*	Up. & Low. Chord O.D.	Up. & Low. Chord Wall	Verticals; Horizontals; Vertical, Horizontal, and Interior Diagonals O.D.	Verticals; Horizontals; Vertical, Horizontal, and Interior Diagonals Wall
I-C-A	24''	54''	16''	36'' min. to 48'' max.	5''	5/16''	2 1/2''	5/16''
II-C-A	36''	66''	21''	42'' min. to 54'' max.	6 1/2''	5/16''	3 1/4''	5/16''
III-C-A (35' Max.)	36''	84''	21''	48'' min. to 66'' max.	7''	3/8''	3 1/2''	3/8''
III-C-A (>35' to 40')	36''	84''	21''	48'' min. to 66'' max.	8''	3/8''	3 1/2''	3/8''

$$*P = \frac{L - s - 3''}{\#\ Panels}$$

Structure Number	Station	Truss Type	Design Length (L)	Number of Panels Per Unit	Panel Length (P)*
1C016S053R000.0-003	406+75	III-C-A	37'-6"	7	60.86"
1C016S053R000.0-002	436+61	III-C-A	37'-6"	7	60.86"
1C016S053R000.0-004	490+91	III-C-A	35'-6"	7	57.43"
1C016S053R000.0-005	540+84	III-C-A	33'-6"	6	63.00"
1C016S053L000.0-006	541+83	III-C-A	35'-6"	7	57.43"

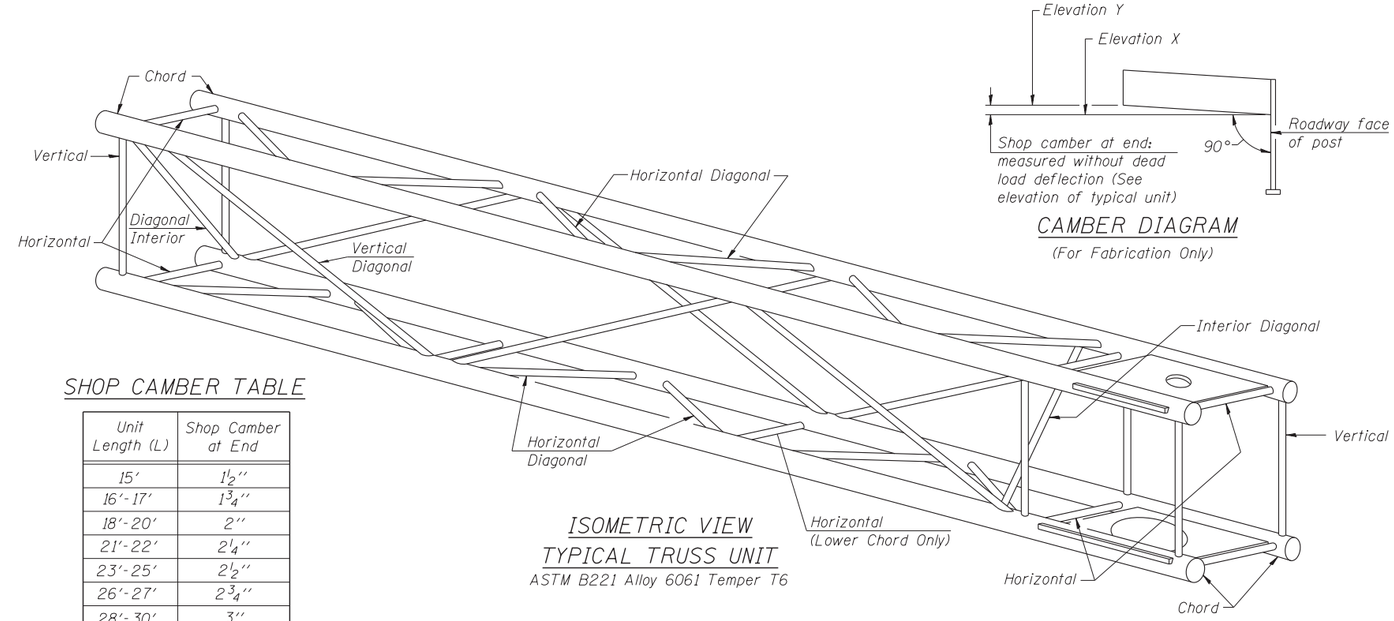

ISOMETRIC VIEW
TYPICAL TRUSS UNIT
ASTM B221 Alloy 6061 Temper T6

CAMBER DIAGRAM
(For Fabrication Only)

SHOP CAMBER TABLE

Unit Length (L)	Shop Camber at End
15'	1 1/2''
16'-17'	1 3/4''
18'-20'	2''
21'-22'	2 1/4''
23'-25'	2 1/2''
26'-27'	2 3/4''
28'-30'	3''
31'-32'	3 1/4''
33'-35'	3 1/2''
36'-37'	4''
38'-40'	4 1/2''

*I-290/IL-53 FAI 290/FAP 342

FILE NAME =	USER NAME =	DESIGNED - ABW	REVISED
		CHECKED -	REVISED
	PLOT SCALE =	DRAWN - KAR	REVISED
	PLOT DATE =	CHECKED -	REVISED

STATE OF ILLINOIS
DEPARTMENT OF TRANSPORTATION

CANTILEVER SIGN STRUCTURES – TRUSS DETAILS
ALUMINUM TRUSS & STEEL POST

SHEET NO. C2 OF 10A SHEETS

F.A. RTE.	SECTION	COUNTY	TOTAL SHEETS	SHEET NO.
•	2011-024-SG	COOK/DuPAGE	132	112

CONTRACT NO. 60P24
ILLINOIS FED. AID PROJECT

OSC-A-2 1-20-11