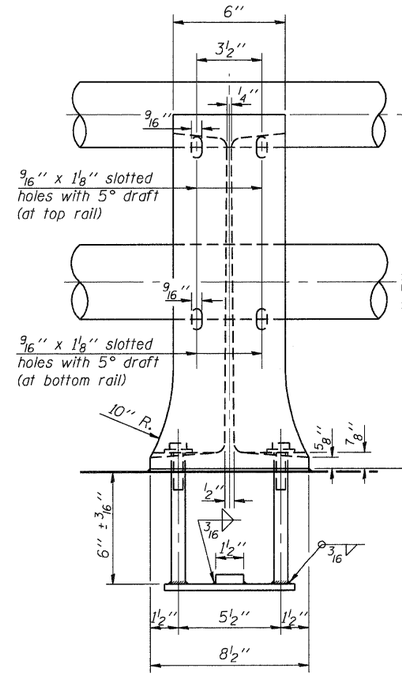

VIEW B-B

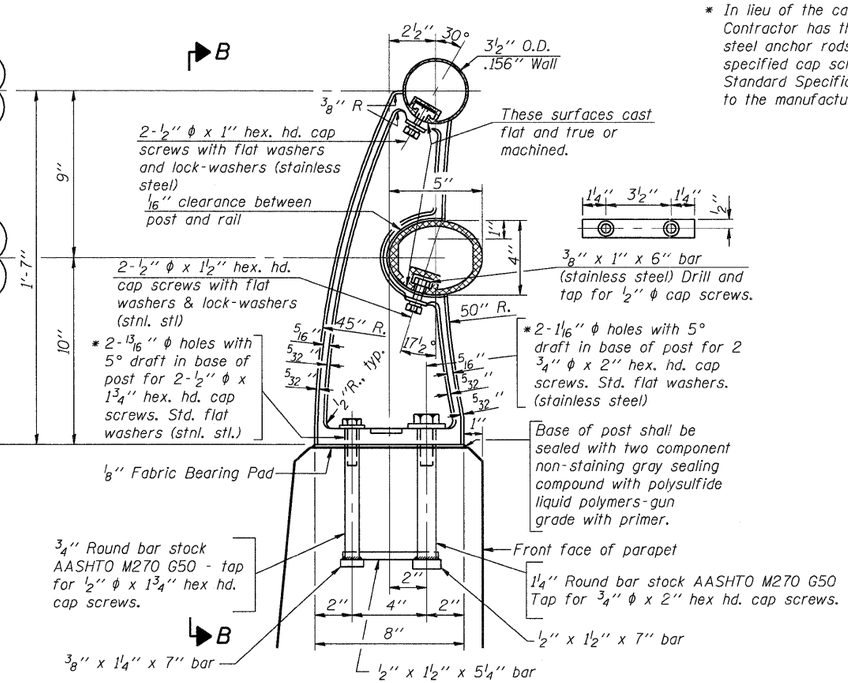

SECTION A-A

RAIL POST DETAILS

* In lieu of the cast-in-place anchor device shown, the Contractor has the option of drilling and setting stainless steel anchor rods of the same diameter and grade as the specified cap screws according to Article 509.06 of the Standard Specifications. Embedment shall be according to the manufacturer's specifications.

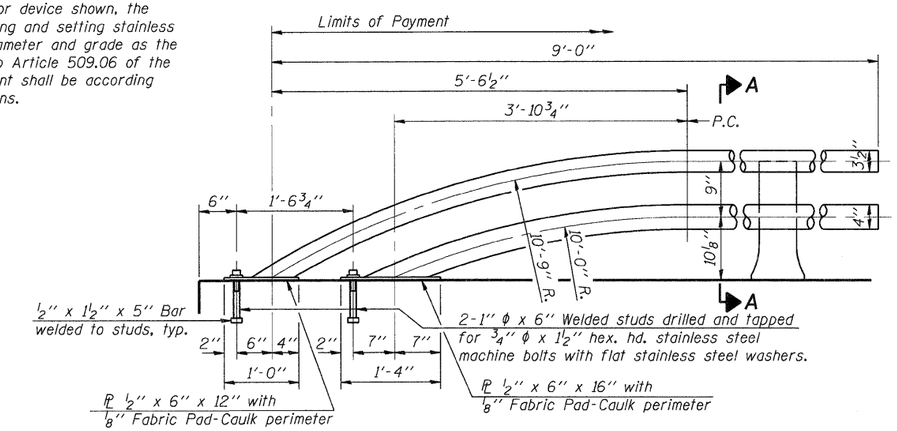

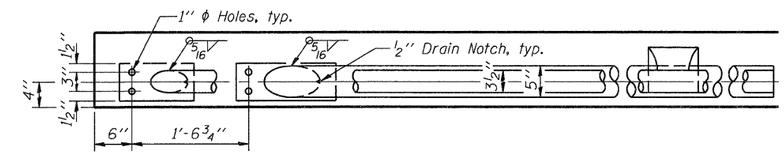

RAIL TERMINAL SECTION

Note:
The end rail post shall be set back as required for the terminal rail section.

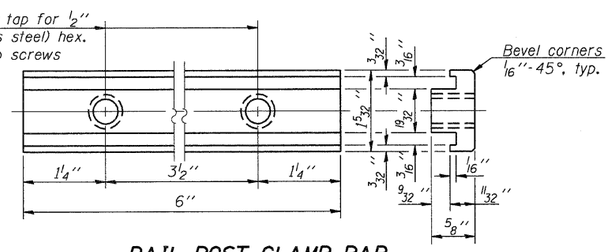

RAIL POST CLAMP BAR

For Top Rail

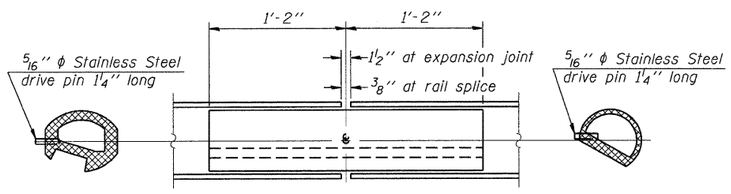

BOTTOM RAIL

TOP RAIL

RAIL SPLICE

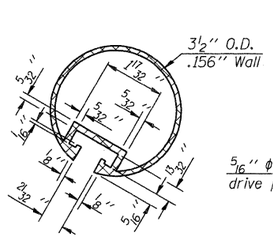

SECTION THRU TOP RAIL

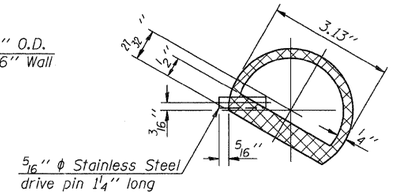

SECTION THRU SPLICE

For Top Rail

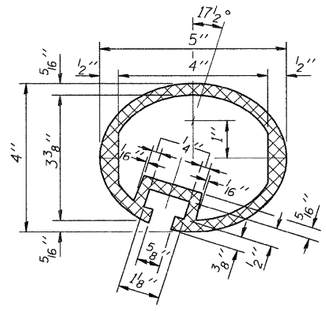

SEC. THRU ELLIPTICAL RAIL SECTION

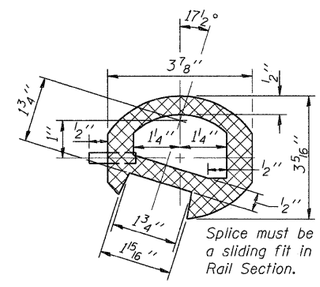

SEC. THRU SPLICE

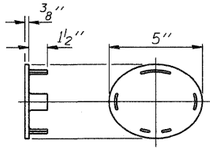

CAST END CAP

For bottom rail
DRIVE FIT TYPE

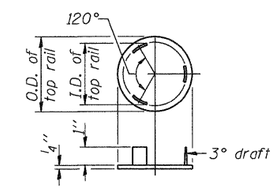

CAST END CAP

For top rail

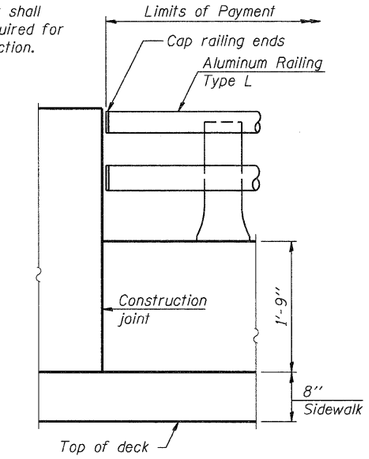

RAIL END TREATMENT FOR TYPE 5 AND 6 TERMINAL

Notes:
All Posts shall be normal to parapet.
All joints in rail shall be spliced per detail.
All exposed rail ends shall be capped per detail.
Provide 1-⅛" and 2-1/16" Aluminum Shims for 25% of the Posts. Rail elements shall be parallel to Grade-high spots will be ground and low spots shimmed.
See sheet W-1 for rail post spacing.

BILL OF MATERIAL

Item	Unit	Quantity
Aluminum Railing, Type L	Foot	73

R-20 7-1-10 (7'-0" to 10'-0" Post spacing)

FILE NAME = $FILEL$	USER NAME = $USER$	DESIGNED - MDB	REVISED -
		DRAWN - MDB	REVISED -
	PLOT SCALE = $SCALE$	CHECKED - PK	REVISED -
TENG TENG & ASSOCIATES, INC. ENGINEERS/ARCHITECTS/PLANNERS CHICAGO, ILLINOIS	PLOT DATE = $DATE$	DATE - 12/16/11	REVISED -

STATE OF ILLINOIS
DEPARTMENT OF TRANSPORTATION
US 20 OVER MCLEAN BOULEVARD

ALUMINUM RAILING, TYPE L DETAILS

SCALE: | SHEET NO. W-3 OF W-3 | STA. 68+25.66 TO STA. 68+99.35

F.A.P. RTE.	SECTION	COUNTY	TOTAL SHEETS	SHEET NO.
345	8R-R	KANE	794	537
SN 045-W012		CONTRACT NO. 60H45		
FED. ROAD DIST. NO. 7	ILLINOIS	FED. AID PROJECT		

\\FS-0014\MV\VAULT_D-TRANS_87\2202\21379-001\STRUCT\CAD\60H45\045W012-60H45-211-MISCDETAIL_SHT.DGN
12-12-2011, 08:41:31 SHUZEKKJ
\\FLS-SNJM-60H45-001-BORDER.DGN