CONTRACT NO. 76994

F.A.P. RTE.	SECTION	COUNTY	TOTAL SHEETS	SHEET NO.
789	*	MADISON	42	34
* 125RS-1, 125I-2TS-2				

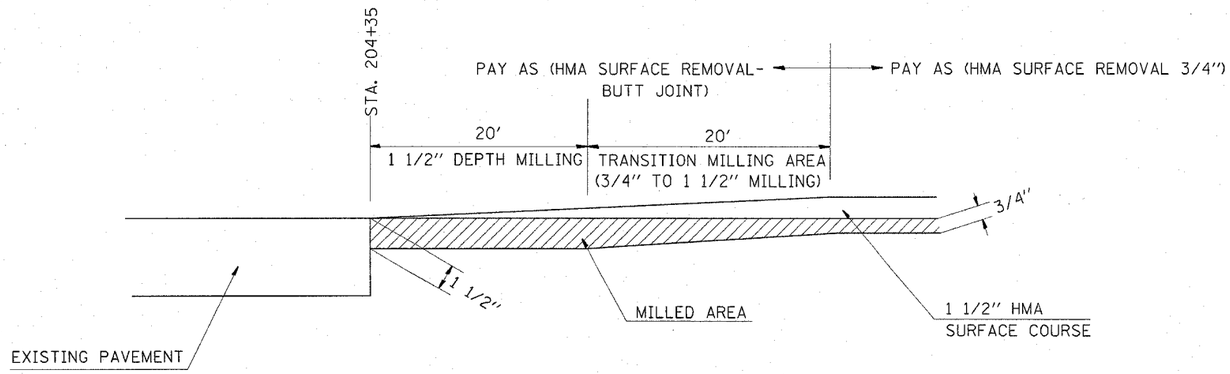

HMA SURFACE REMOVAL - BUTT JOINT

(STA. 204+35 TO STA. 204+75)

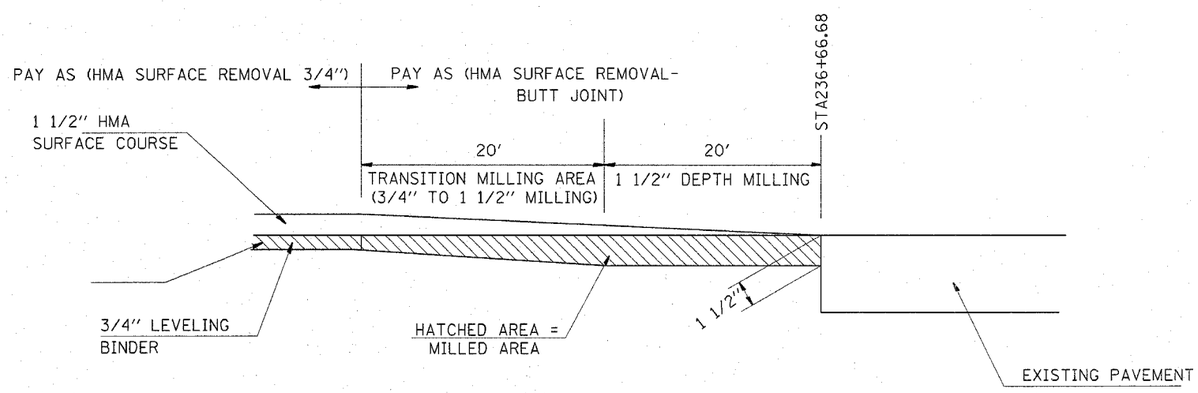

HMA SURFACE REMOVAL - BUTT JOINT

(STA. 236+26.68 TO STA. 236+66.68)

REVISIONS	
NAME	DATE

ILLINOIS DEPARTMENT OF TRANSPORTATION

MISCELLANEOUS DETAILS

FAP ROUTE 789
SECTION 125RS-1, 125I-2TS-2
MADISON COUNTY

SCALE: VERT. HORIZ.
DATE
DRAWN BY
CHECKED BY

PLOT DATE = 1/22/2007
FILE NAME = c:\projects\ed83486\plan\pln83486e.dgn
PLOT SCALE = 50.4000 ' / IN.
REFERENCE = REF