F.A.P. RTE.	SECTION	COUNTY	TOTAL SHEETS	SHEET NO.
310	*	MADISON	418	137
STA.		TO STA.		
FED. ROAD DIST. NO.		ILLINOIS	FED. AID PROJECT	

* SECTION 60-14-2
& 60-14-2B
CONTRACT NO. 76986

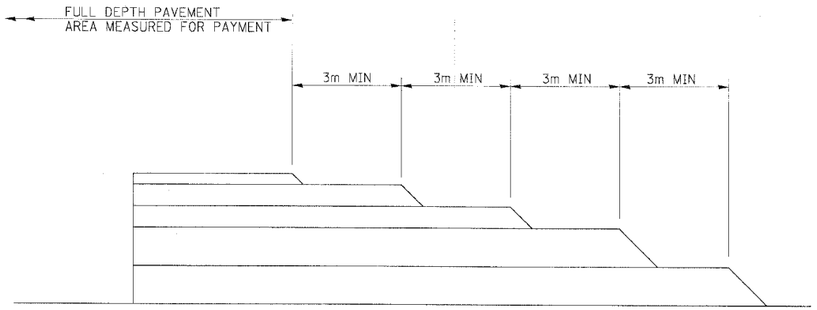

1. THE EXISTING TERMINATION SHALL BE CLEANED AND PRIMED AS DIRECTED BY THE ENGINEER.
2. PRIOR TO PLACING THE SURFACE COURSE AT A FULL DEPTH PAVEMENT TERMINATION, THE CONTRACTOR SHALL SAW THE SURFACE COURSE AND REMOVE EXCESS BITUMINOUS MATERIAL AS DIRECTED BY THE ENGINEER. THE COST OF SAWING AND REMOVING THIS MATERIAL SHALL BE INCLUDED IN THE BITUMINOUS CONCRETE PAVEMENT FULL DEPTH OF THE TYPE AND THICKNESS SPECIFIED. THE COST OF CLEANING AND REMOVING MATERIAL AT THE EXISTING TAPER SHALL BE INCIDENTAL TO THE BITUMINOUS CONCRETE PAVEMENT FULL DEPTH OF THE TYPE AND THICKNESS SPECIFIED.

DETAIL OF TERMINATION OF FULL-DEPTH HOT-MIX ASPHALT PAVEMENT

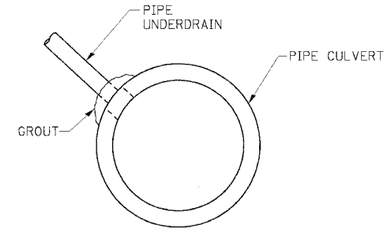

DETAIL OF PIPE UNDERDRAIN ATTACHING TO CULVERTS

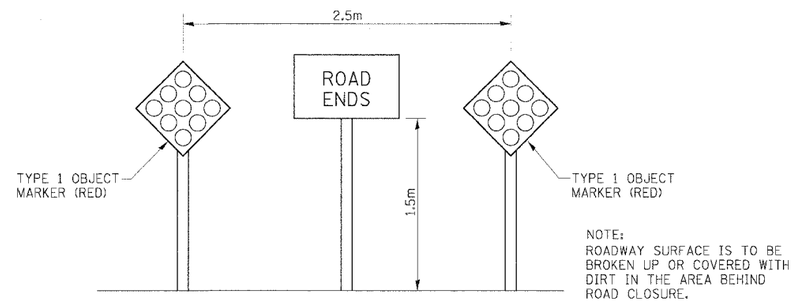

NOTE:
ROADWAY SURFACE IS TO BE BROKEN UP OR COVERED WITH DIRT IN THE AREA BEHIND ROAD CLOSURE.

ROAD CLOSURE DETAIL

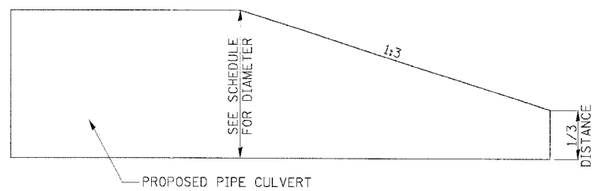

BEVELED END DETAIL

THE BEVELED END PORTION WILL BE PAID FOR AT THE SAME UNIT PRICE PER FOOT AS THE PIPE CULVERT.

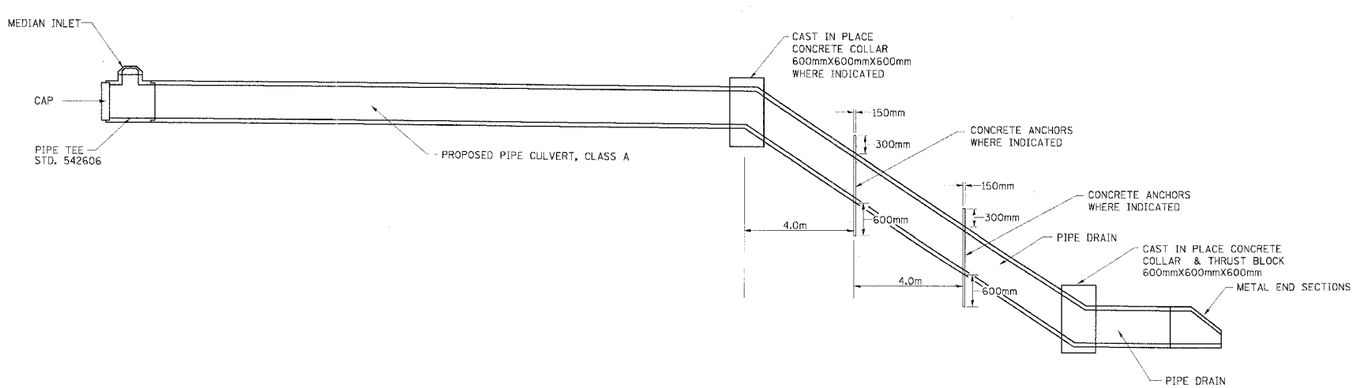

MEDIAN DRAIN DETAIL

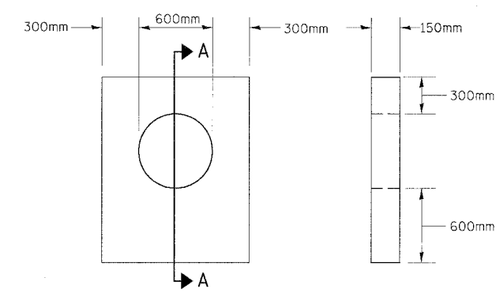

CONCRETE ANCHOR

SECTION A-A

REVISIONS	
NAME	DATE

ILLINOIS DEPARTMENT OF TRANSPORTATION

MISCELLANEOUS DETAILS

FAP ROUTE 310
FAP ROUTE 310 SECTION 60-14-2, 60-14-2B
MADISON COUNTY

DRAWN BY BANDY
DATE CHECKED BY STEUART