CONTRACT NO. 72899

F.A.P. RTE.	SECTION	COUNTY	TOTAL SHEETS	SHEET NO.
714	(135)RS-6,TS	CHRISTIAN	47	19
STA.		TO STA.		
FED. ROAD DIST. NO. 6	ILLINOIS	FED. AID PROJECT		

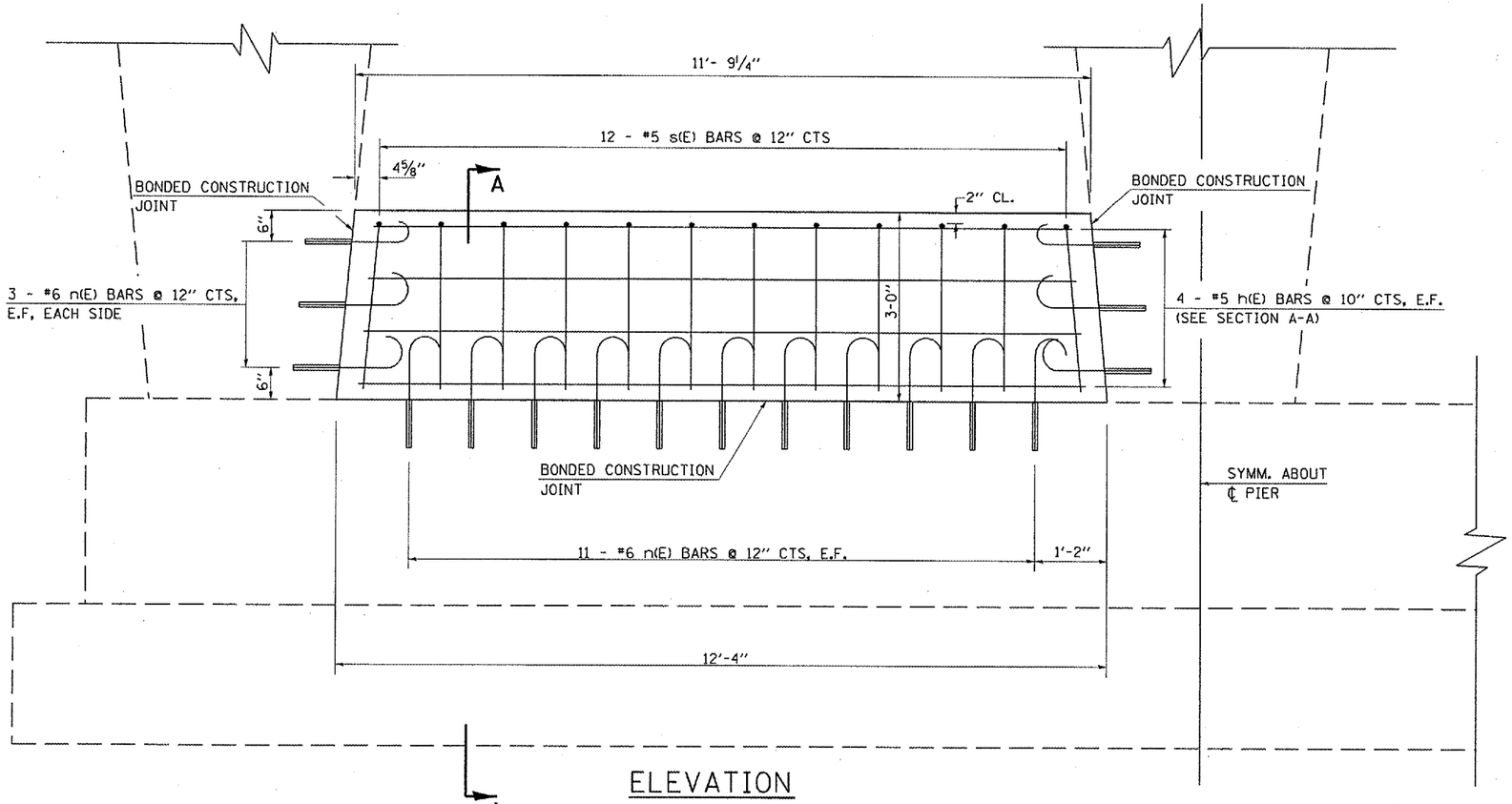

ELEVATION

(TYP. EACH PIER OPENING
4 TOTAL CRASHWALLS)

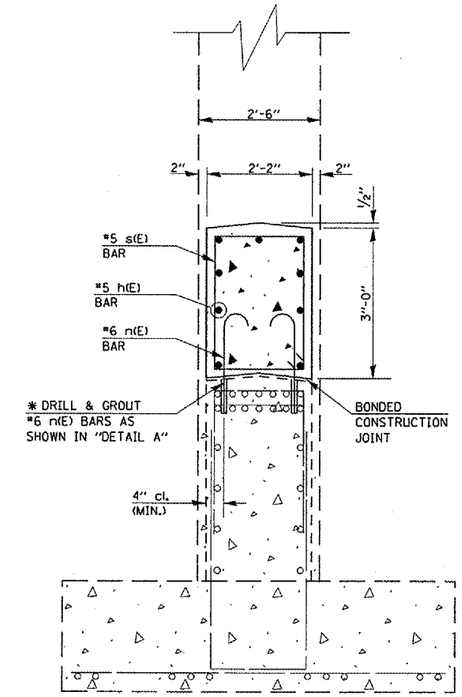

SECTION A - A

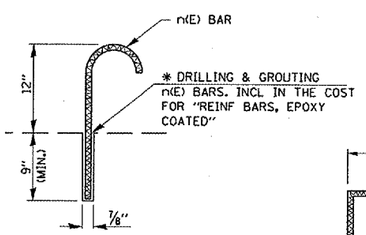

DETAIL A

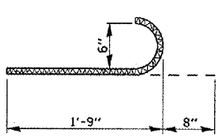

BAR n(E)

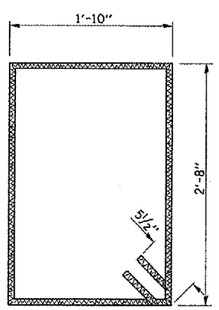

BAR s(E)

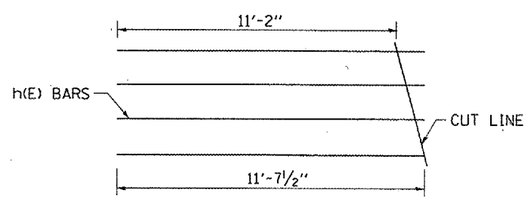

BAR h(E)
CUT DIAGRAM

BILL OF MATERIAL (SN 011-0010)				
BAR	NO.	SIZE	LENGTH	SHAPE
h(E)	36	#5	11'-7½"	
n(E)	136	#6	2'-5"	
s(E)	48	#5	9'-11"	
CONCRETE STRUCTURES			CU. YD.	11.6
REINFORCEMENT BARS, EPOXY COATED			POUND	1430

* EPOXY GROUTING TO BE DONE IN ACCORDANCE WITH ART. 584 OF THE STANDARD SPECIFICATIONS.

NOTES:

PLAN DIMENSIONS AND DETAILS RELATIVE TO EXISTING PLANS ARE SUBJECT TO ROUTINE VARIATIONS. THE CONTRACTOR SHALL FIELD VERIFY EXISTING DIMENSIONS AND DETAILS AFFECTING NEW CONSTRUCTION AND MAKE NECESSARY APPROVED ADJUSTMENTS PRIOR TO CONSTRUCTION OR ORDERING OF MATERIALS. SUCH VARIATIONS SHALL NOT BE CAUSE FOR ADDITIONAL COMPENSATION FOR A CHANGE IN SCOPE OF WORK, HOWEVER, THE CONTRACTOR WILL BE PAID FOR THE QUANTITY ACTUALLY FURNISHED BASED UPON THE UNIT PRICE BID FOR THE WORK.

REINFORCEMENT BARS SHALL CONFORM TO THE REQUIREMENTS OF ASTM A 706 Gr 60 (IL MODIFIED). SEE SPECIAL PROVISIONS

REINFORCEMENT BARS DESIGNATED (E) SHALL BE EPOXY COATED.

THE CONTRACTOR SHOULD TAKE SPECIAL CARE NOT TO DAMAGE EXISTING REINFORCEMENT BARS ON CRASHWALL OR COLUMNS WHILE EPOXY GROUTING NEW REINFORCEMENT.

REVISIONS	
NAME	DATE
AJS	3/7/07

ILLINOIS DEPARTMENT OF TRANSPORTATION

CRASHWALL DETAILS - SN 011-0010
FAP ROUTE 714 (IL 48)
SECTION (135)RS-6, TS
CHRISTIAN COUNTY

SCALE: VERT. HORIZ.
DATE
DRAWN BY
CHECKED BY

PLOT DATE = 3/9/2007
FILE NAME = c:\projects\d852284\sht3gnrcls.dgn
PLOT SCALE = 64.7857 ' / IN.
USER NAME = baughlurd