STATE OF ILLINOIS
DEPARTMENT OF TRANSPORTATION

ROUTE NO.	SECTION	COUNTY	TOTAL SHEETS	SHEET NO.
SBI 4	F(B-3)	MACOUPIN	27	18
FED. ROAD DIST. NO. 7	ILLINOIS	FED. AID PROJECT-		

SHEET NO. 2
6 SHEETS

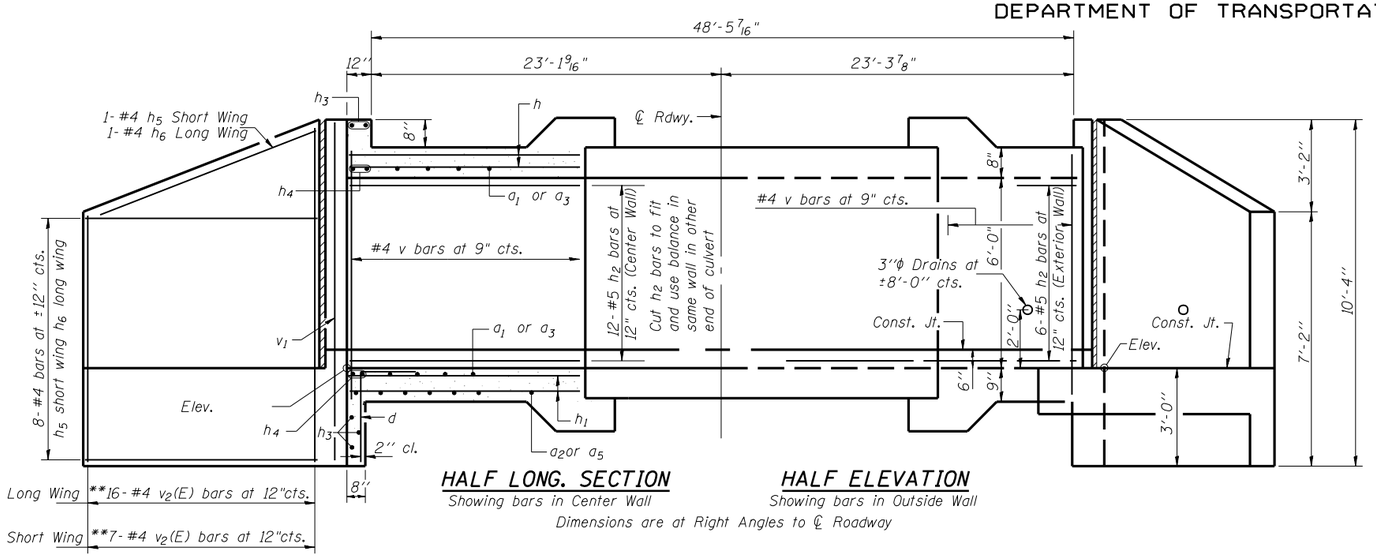

HALF LONG. SECTION
Showing bars in Center Wall

HALF ELEVATION
Showing bars in Outside Wall

Dimensions are at Right Angles to ℄ Roadway

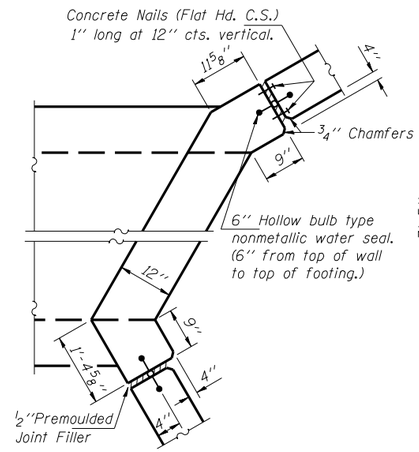

CORNER DETAIL

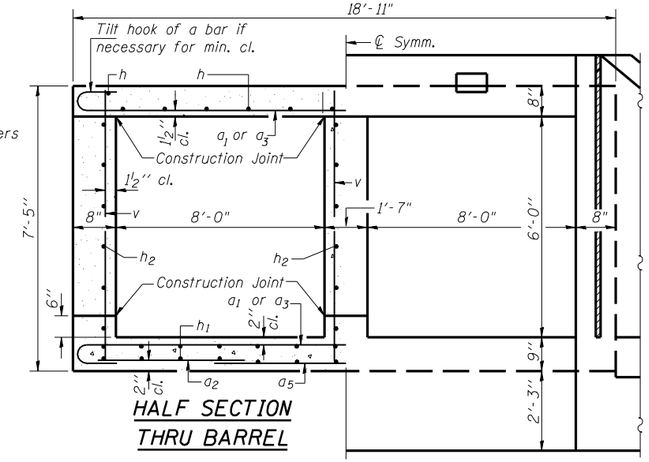

HALF SECTION THRU BARREL

HALF END ELEVATION

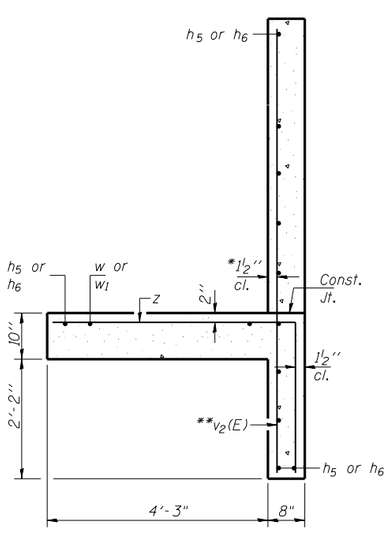

SECTION A-A

* v_2(E) bars shall not be placed more than 1½" cl. from back face of wingwalls.

** Cut v_2(E) bars to fit wingwall slope

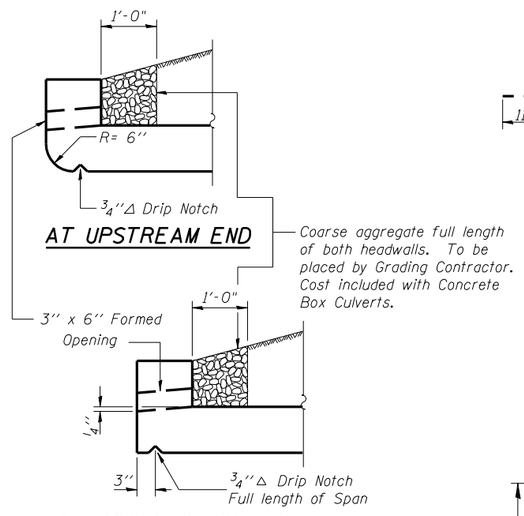

DRAIN DETAIL

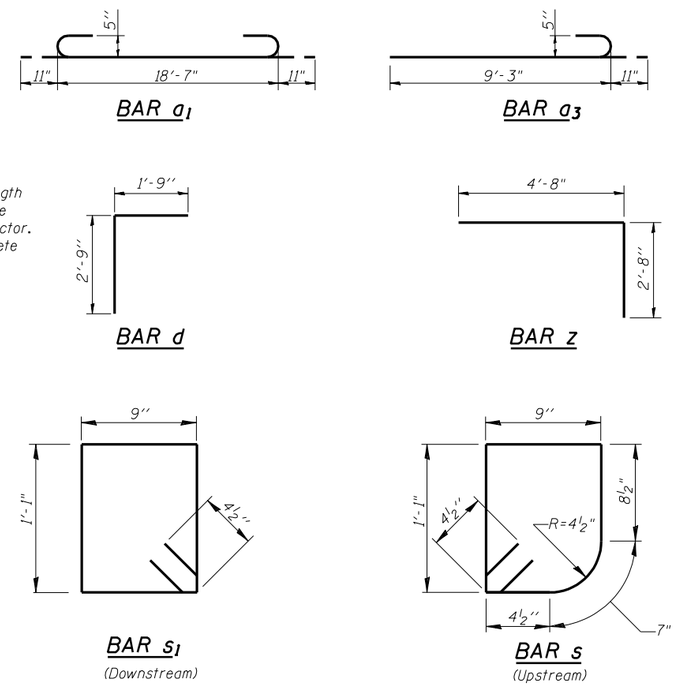

BILL OF MATERIAL

Bar	No.	Size	Length	Shape
a_1	36	#8	20'-5"	
a_2	9	#4	8'-0"	
a_3	68	#8	10'-2"	
a_4	12	#4	8'-3"	
a_5	16	#7	7'-6"	
d	36	#4	4'-6"	
h	14	#7	20'-7"	
h_1	28	#5	20'-7"	
h_2	24	#5	20'-7"	
h_3	10	#6	23'-8"	
h_4	8	#6	24'-7"	
h_5	22	#4	6'-9"	
h_6	22	#4	15'-0"	
s	23	#4	4'-3"	
s_1	23	#4	4'-5"	
v	116	#4	7'-1"	
v_1	8	#4	10'-1"	
v_2(E)	46	#4	10'-1"	
w	10	#5	28'-0"	
w_1	10	#5	12'-2"	
x	120	#4	6'-9"	
x_1	12	#4	14'-11"	
x_2	12	#4	15'-7"	
z	56	#6	7'-4"	
Concrete Box Culverts			Cu. Yd.	62.6
Reinforcement Bars, Epoxy Coated			Pound	310
Reinforcement Bars			Pound	9510

Notes: Reinforcement bars designated (E) shall be epoxy coated.
Bars indicated thus 12x4-#5 etc. indicates 12 lines of bars with 4 lengths per line.

For Collar Detail see Sheet #5

Bill of Material shown is for two end sections. The quantities shown are for information only.

DESIGNED	N. KAMPMAN
CHECKED	M. HOOK
DRAWN	M. HUNT
CHECKED	M. HOOK

DB-L-R 10-31-02

- 20
EXAMINED
ENGINEER OF BRIDGE DESIGN
PASSED
ENGINEER OF BRIDGES AND STRUCTURES

CULVERT DETAILS
OLD IL 4 OVER HURRICANE CREEK
SBI ROUTE 4 SECTION F(B-3)
MACOUPIN COUNTY
STATION 2126+25.00
STRUCTURE 059-2503