ROUTE NO.	SECTION	COUNTY	TOTAL SHEETS	SHEET NO.
F.A.S. 2245	22B-D	BUREAU	66	37
FED. ROAD DIST. NO. 7		ILLINOIS	FED. AID PROJECT-	

SHEET NO. 1
25 SHEETS

Bench Mark: Sta. 5+698.96, 0.00 offset. Elev. 142.512.

Existing Structure: S.N. 006-0084 Built in 1964 as F.A. Rte. 30, Section 22B, at Sta. 5+343.760.
Existing structure consists of a 3-span composite reinforced concrete deck on steel WF stringers supported on concrete pile bent spill thru abutments and solid timber pile supported piers. 66.446 m Bk.-Bk. abuts. varies 11.474 m to 13.094 m O.-O. deck. Concrete deck to be removed and replaced.
One lane of traffic to be maintained utilizing stage construction.

STATE OF ILLINOIS
DEPARTMENT OF TRANSPORTATION

No salvage

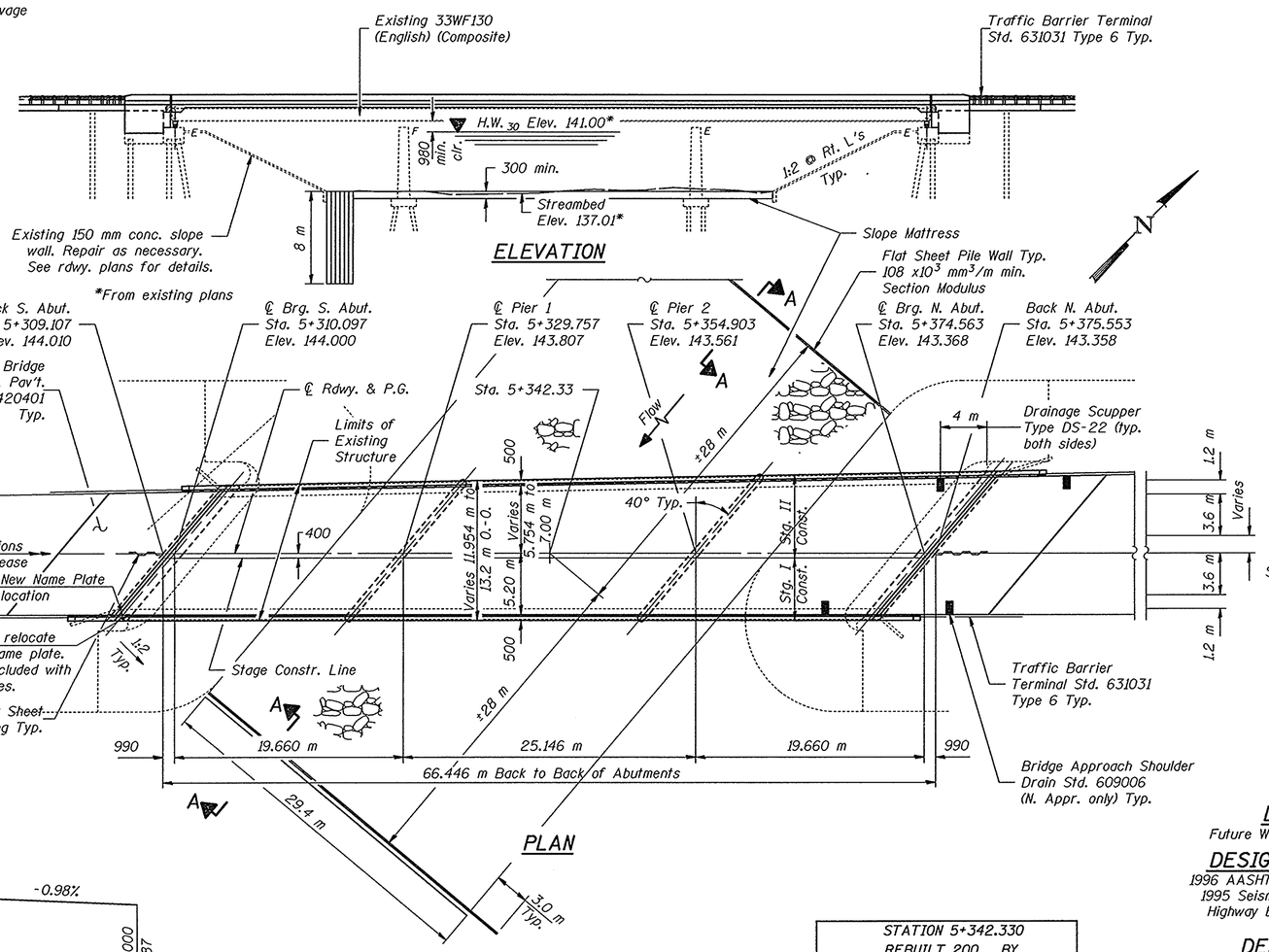

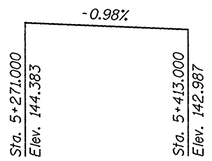

PROFILE GRADE
(along P.G.)

DESIGNED	C.M.E.
CHECKED	E.J.C.
DRAWN	W.D.C. / M.B.M.
CHECKED	E.J.C. / C.M.E.

November 18, 1999
EXAMINED Thomas J. Domyslski — ENGINEER OF BRIDGE DESIGN
PASSED Ralph E. Anderson — ENGINEER OF BRIDGES AND STRUCTURES

STATE OF ILLINOIS RALPH E. ANDERSON 081-004625 SPRINGFIELD LICENSED STRUCTURAL ENGINEER

EXPIRES 11-30-2000

STATION 5+342.330
REBUILT 200 BY
STATE OF ILLINOIS
F.A.S. RT. 2245 - SECT. 22B-D
F.A. PROJECT:
LOADING MS18
STR. NO. 006-0084

NAME PLATES
See Std. 515001.

GENERAL NOTES

Fasteners shall be high strength bolts. Bolts M20, open holes 22 mm ϕ, unless otherwise noted.
Field welding of construction accessories will not be permitted to the bottom flange of beams or girders nor to the top flange for a distance equal to one-fourth the span length each way from the pier supports. Field welding in other areas will be permitted only when approved by the Engineer.
Anchor bolts shall be set before bolting diaphragms over supports.
Reinforcement bars shall conform to the requirements of AASHTO M 31M, M 42M or M 53M Grade 400.
Layout of slope protection system may be varied in the field to suit ground conditions as directed by the Engineer.
Plan dimensions and details relative to existing structure have been taken from existing plans and are subject to nominal construction variations. It shall be the Contractor's responsibility to verify such dimensions and details in the field and make necessary approved adjustments prior to construction or ordering of materials. Such variations shall not be cause for additional compensation for a change in the scope of the work, however, the Contractor will be paid for the quantity actually furnished at the unit price bid for the work.
Prior to pouring the new concrete for the deck, all loose rust, loose mill scale and all other loose, detrimental foreign material shall be removed from the existing shear studs and from the portions of flanges of beams in contact with concrete. The removal shall be accomplished with appropriate hand tools. Cost shall be included with Removal of Existing Concrete Deck.
All dimensions are in millimeters (mm) except as noted.
The existing structural steel coating contains lead. The Contractor should take appropriate precautions to deal with the presence of lead on this project.
Field painting of structural steel shall be done under a separate painting contract.
All new structural steel shall be shop painted with the inorganic zinc rich primer per AASHTO M 300, Type 1.
Existing structural steel shall only be cleaned as required by the Special Provision, Cleaning and Painting Adjacent Areas of Existing Steel Structures.
Bearing seat surfaces shall be constructed or adjusted to the designated elevations within a tolerance of 3 mm. Adjustment shall be made either by grinding the surface or by shimming the bearing. Two 3 mm adjusting shims, of the dimensions of the bottom bearing plate, shall be provided for each bearing in addition to all other plates or shims. For Type I Elastomeric Bearings, two 3 mm adjusting shims shall be provided for each bearing and placed as detailed.

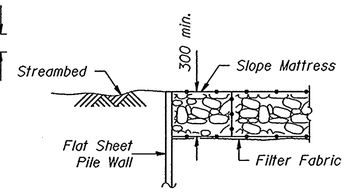

SECTION A-A

LOADING MS18
Future Wearing Surface not allowed.

DESIGN SPECIFICATIONS
1996 AASHTO with 1997 and 1998 Interims
1995 Seismic Retrofitting Guidelines for Highway Bridges FHWA/RD - 94/052

DESIGN STRESSES

Existing Structure
f_c = 10 MPa
f_s = 140 MPa (reinforcement)
f_y = 250 MPa (structural steel)
v = 520 kPa (footings)

New Construction
f_y = 400 MPa (reinforcement)
f'_c = 24 MPa
f_y = 250 MPa (structural steel AASHTO M 270M, grade 250)

SEISMIC DATA
Seismic Performance Category (SPC) = A
Bedrock Acceleration Coefficient (A) = 0.038g
Site Coefficient (S) = 1.2

TOTAL BILL OF MATERIAL

	ITEM	UNIT	SUPER	SUB	TOTAL
	Removal of Existing Concrete Deck	Each	1		1
	Elastomeric Bearing Assembly, Type I	Each	7		7
	Elastomeric Bearing Assembly, Type II	Each	7		7
	Jack and Remove Existing Bearings	Each	14		14
	Name Plates	Each	1		1
	Filter Fabric for use with Riprap	m²		1650	1650
	Slope Mattress, 300 mm	m²		1650	1650
**	Protective Coat	m²	918		918
	Concrete Removal	m³		28.8	28.8
	Structure Excavation	m³		58.7	58.7
	Neoprene Expansion Joint, 50 mm	meter	29		29
	Concrete Structures	m³		32.4	32.4
	Concrete Superstructure	m³	224		224
	Bridge Deck Grooving	m²	715		715
	Furnishing and Erecting Structural Steel	kg	3255		3255
	Structural Steel Removal	kg	2040		2040
	Temporary Sheet Piling	m²		35	35
	Reinforcement Bars, Epoxy Coated	kg	37340	3080	40420
	Steel Sheet Piling	m²		520	520
	Bar Splicers	Each	717	8	725
	Drainage Scuppers	Each	2		2

** Quantity includes deck surface, top and inside surface of parapets and top and inside face of wingwalls.

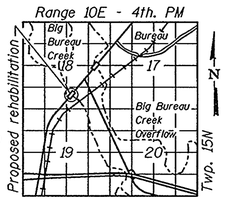

LOCATION SKETCH

GENERAL PLAN
ILLINOIS ROUTE 29 OVER
BIG BUREAU CREEK
F.A.S. ROUTE 2245 - SECTION 22B-D
BUREAU COUNTY
STATION 5+342.330
STRUCTURE NO. 006-0084

STATE OF ILLINOIS
DEPARTMENT OF TRANSPORTATION

ROUTE NO.	SECTION	COUNTY	TOTAL SHEETS	SHEET NO.
F.A.S. 2245	22B-D	BUREAU	66	42
FED. ROAD DIST. NO. 7		ILLINOIS	FED. AID PROJECT-	

SHEET NO. 6
25 SHEETS

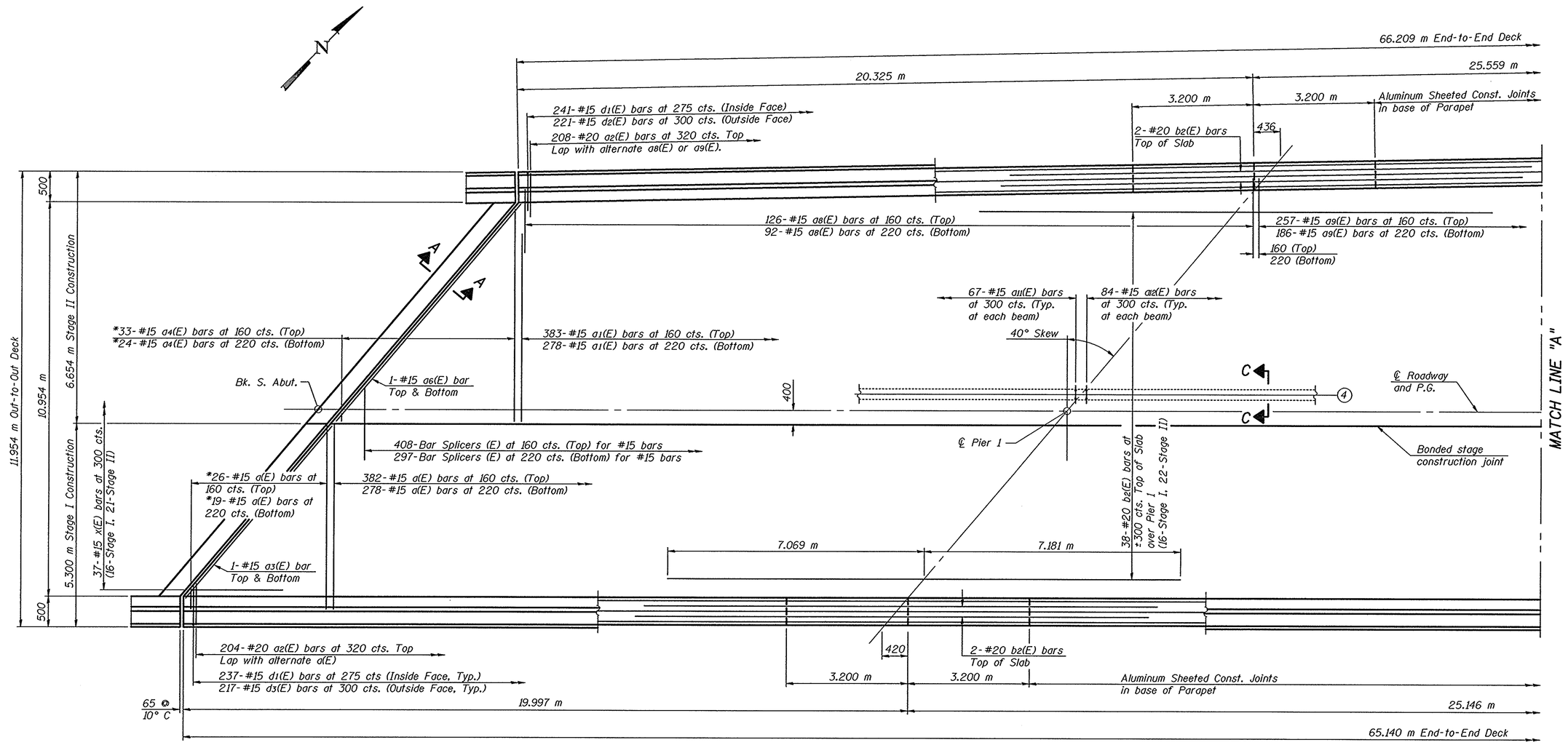

MINIMUM BAR LAP

#15 bar = 510
#20 bar = 640

Notes: See Sheets 6 thru 11 of 25 for superstructure details and Bill of Material.
Reinforcement bars designated (E) shall be epoxy coated.
Bars indicated thus 34 x 11-#15 etc. indicates 34 lines of bars with 11 lengths per line.
See Sheets 9 and 10 of 25 for parapet reinforcement.

* Order d(E) & a4(E) bars full length. Cut to fit skew and use remainder of bars in opposite end.

DESIGNED	C.M.E.
CHECKED	E.J.C.
DRAWN	M.B.M.
CHECKED	E.J.C. / C.M.E.

November 18, 1999
EXAMINED Thomas J. Domagalski
ENGINEER OF BRIDGE DESIGN
PASSED Ralph E. Anderson
ENGINEER OF BRIDGES AND STRUCTURES

SUPERSTRUCTURE
F.A.S. ROUTE 2245 SEC. 22B-D
BUREAU COUNTY
STATION 5+342.330

STATE OF ILLINOIS
DEPARTMENT OF TRANSPORTATION

ROUTE NO.	SECTION	COUNTY	TOTAL SHEETS	SHEET NO.
F.A.S. 2245	22B-D	BUREAU	66	43
FED. ROAD DIST. NO. 7		ILLINOIS	FED. AID PROJECT-	

SHEET NO. 7
25 SHEETS

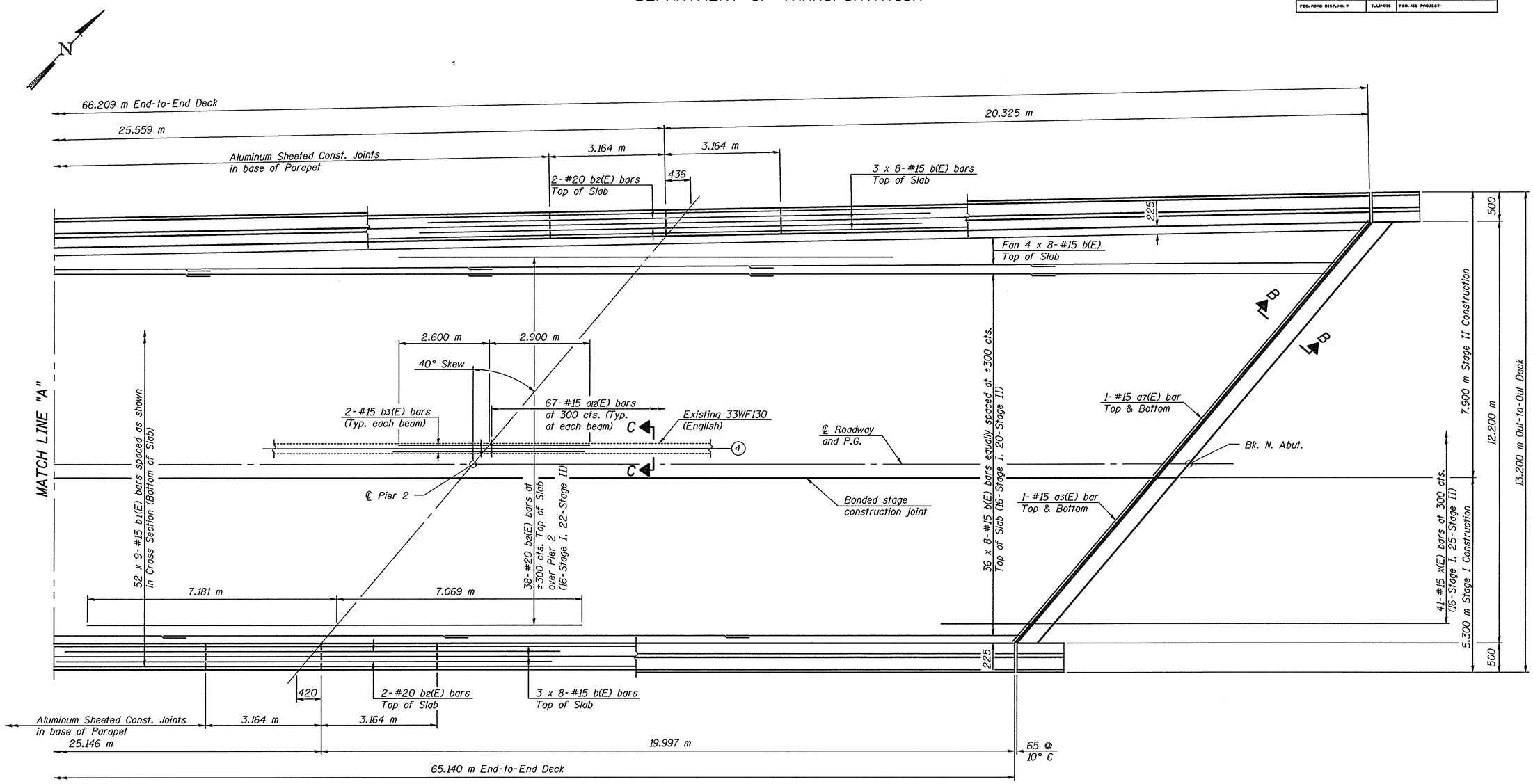

MINIMUM BAR LAP

#15 Bar = 510
#20 Bar = 640

DESIGNED	C.M.E.
CHECKED	E.J.C.
DRAWN	M.B.M.
CHECKED	E.J.C. / C.M.E.

November 18, 1999
EXAMINED Thomas J. Domagalski
ENGINEER OF BRIDGE DESIGN
PASSED Ralph E. Anderson
ENGINEER OF BRIDGES AND STRUCTURES

SUPERSTRUCTURE
F.A.S. ROUTE 2245 SEC. 22B-D
BUREAU COUNTY
STATION 5+342.330

ROUTE NO.	SECTION	COUNTY	TOTAL SHEETS	SHEET NO.
F.A.S. 2245	22B-D	BUREAU	66	44
FED. ROAD DIST. NO. 7	ILLINOIS	FED. AID PROJECT-		

SHEET NO. 8
25 SHEETS

* Place bars in back of anchor bolts as shown if required to maintain 25 mm cl. (±0-3 mm). Anchor bolts should be tied to these bars.

STATE OF ILLINOIS
DEPARTMENT OF TRANSPORTATION

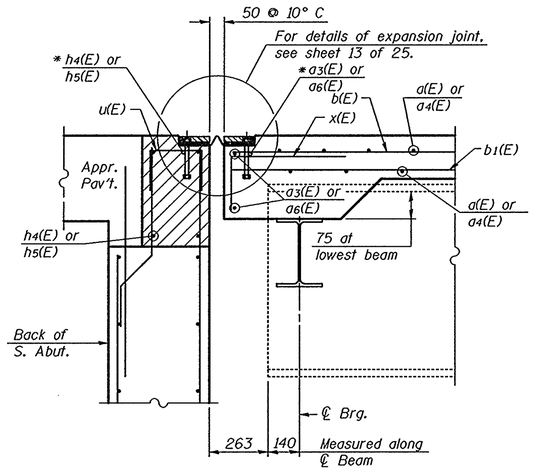

SECTION A-A

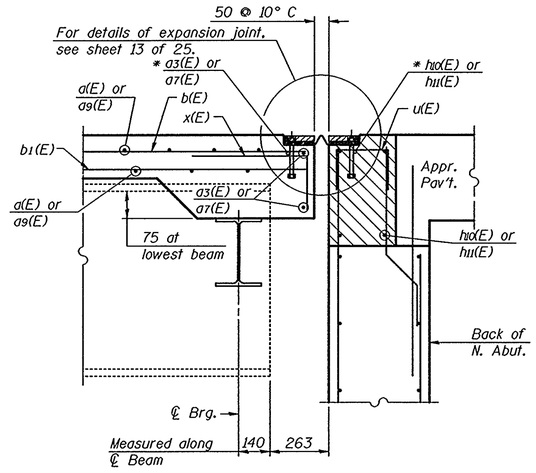

SECTION B-B

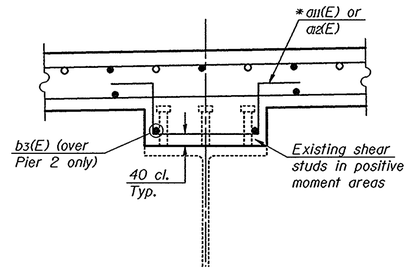

SECTION C-C

* a11(E) or a12(E) bars shall be required at any other locations where fillet heights exceed 150 mm. Additional a11(E) or a12(E) bars may be required.

Indicates area to be poured after superstructure forms have been removed. Quantity of concrete is included with Concrete Superstructure.

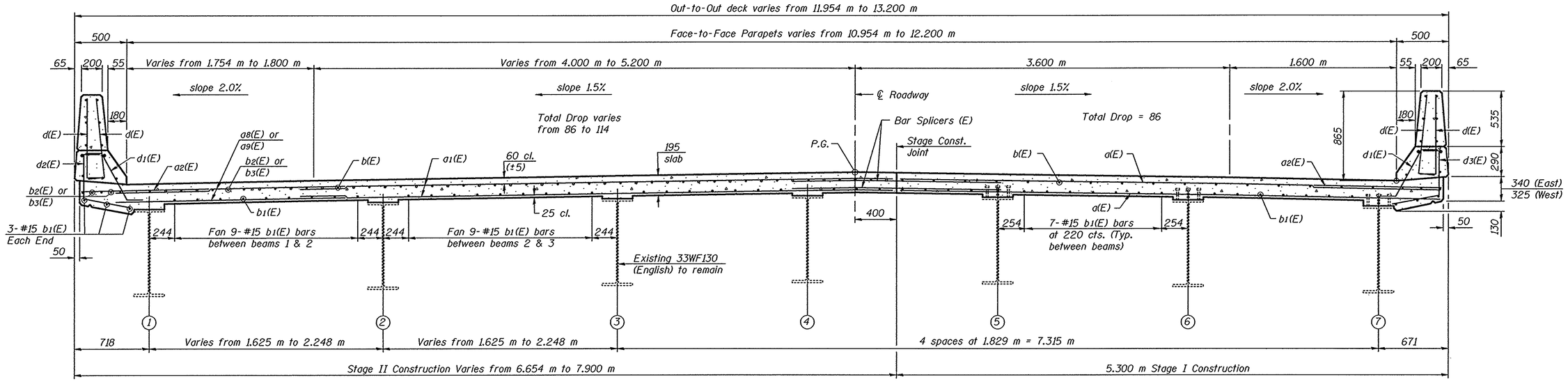

NEAR PIER

NEAR MIDSPAN

CROSS SECTION
(Looking North)

DESIGNED	C.M.E.
CHECKED	E.J.C.
DRAWN	M.B.M.
CHECKED	E.J.C. / C.M.E.

November 18, 1999
EXAMINED Thomas J. Domagalski
ENGINEER OF BRIDGE DESIGN
PASSED Ralph E. Anderson
ENGINEER OF BRIDGES AND STRUCTURES

SUPERSTRUCTURE DETAILS
F.A.S. ROUTE 2245 SEC. 22B-D
BUREAU COUNTY
STATION 5+342.330

STATE OF ILLINOIS
DEPARTMENT OF TRANSPORTATION

ROUTE NO.	SECTION	COUNTY	TOTAL SHEETS	SHEET NO.
F.A.S. 2245	22B-D	BUREAU	66	45
FED. ROAD DIST. NO. 7		ILLINOIS	FED. AID PROJECT-	

SHEET NO. 9
25 SHEETS

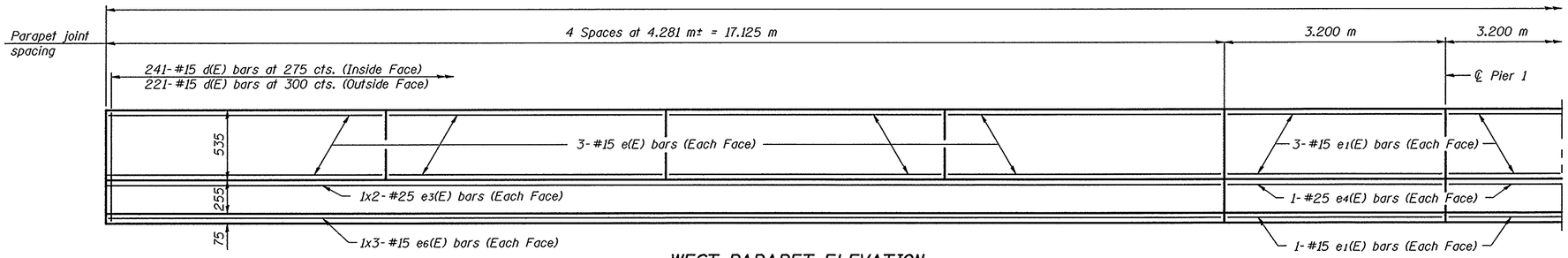

WEST PARAPET ELEVATION
(Looking West at inside face)

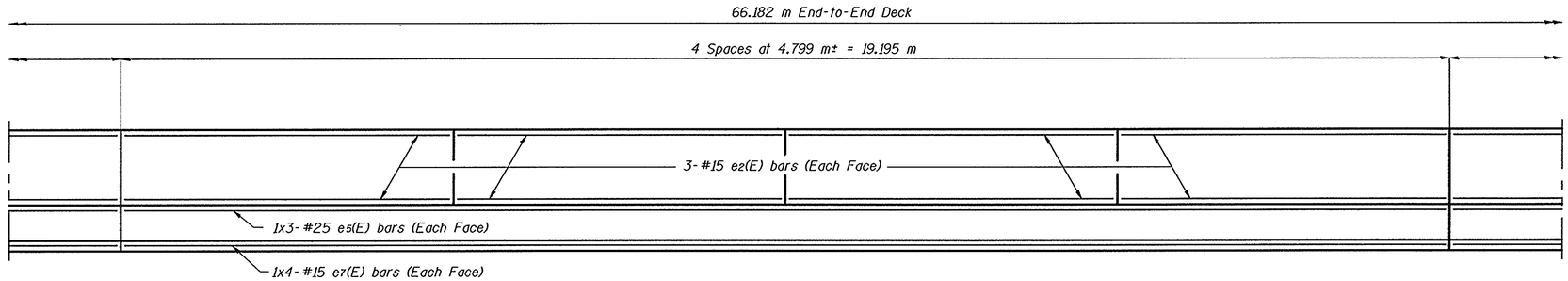

WEST PARAPET ELEVATION
(Looking West at inside face)

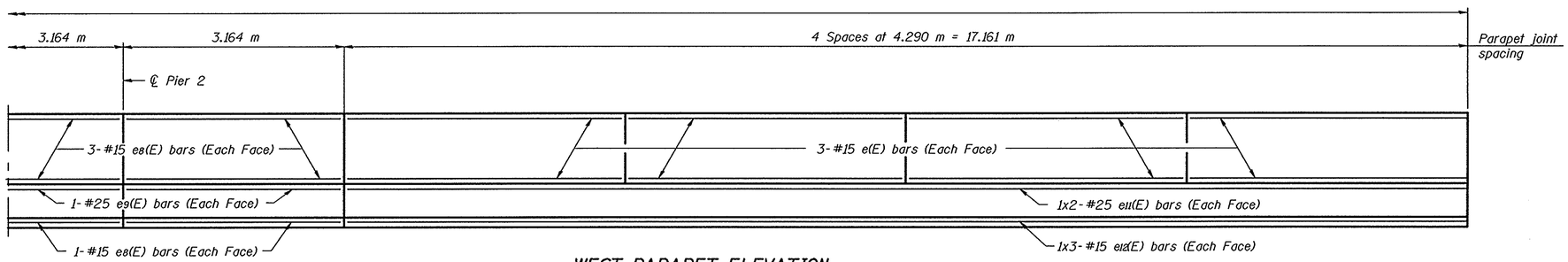

WEST PARAPET ELEVATION
(Looking West at inside face)

DESIGNED	C.M.E.
CHECKED	E.J.C.
DRAWN	M.B.M.
CHECKED	E.J.C. / C.M.E.

November 18, 1999
EXAMINED Thomas J. Domagalski
ENGINEER OF BRIDGE DESIGN
PASSED Ralph E. Anderson
ENGINEER OF BRIDGES AND STRUCTURES

MINIMUM BAR LAP
#15 Bar = 490
#25 Bar = 1.01 m

SUPERSTRUCTURE DETAILS
F.A.S. ROUTE 2245 SEC. 22B-D
BUREAU COUNTY
STATION 5+342.330

STATE OF ILLINOIS
DEPARTMENT OF TRANSPORTATION

ROUTE NO.	SECTION	COUNTY	TOTAL SHEETS	SHEET NO.
F.A.S. 2245	22B-D	BUREAU	66	46
FED. ROAD DIST. NO. 7		ILLINOIS	FED. AID PROJECT-	

SHEET NO. 10
25 SHEETS

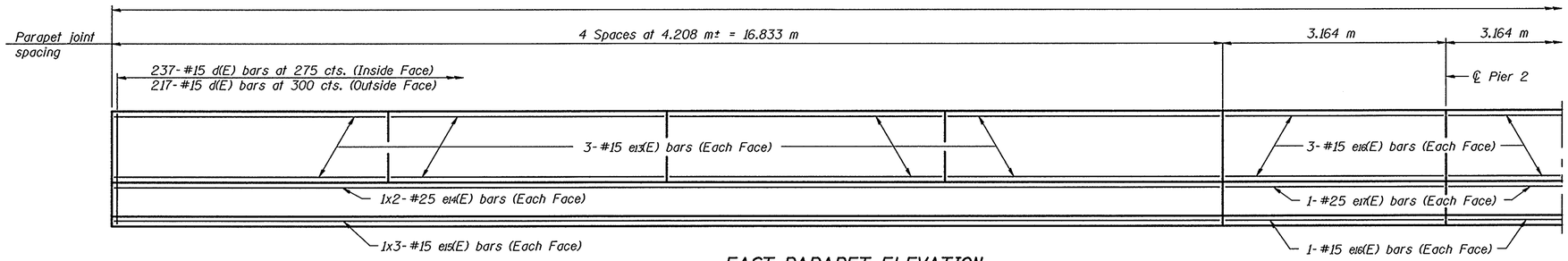

EAST PARAPET ELEVATION
(Looking East at inside face)

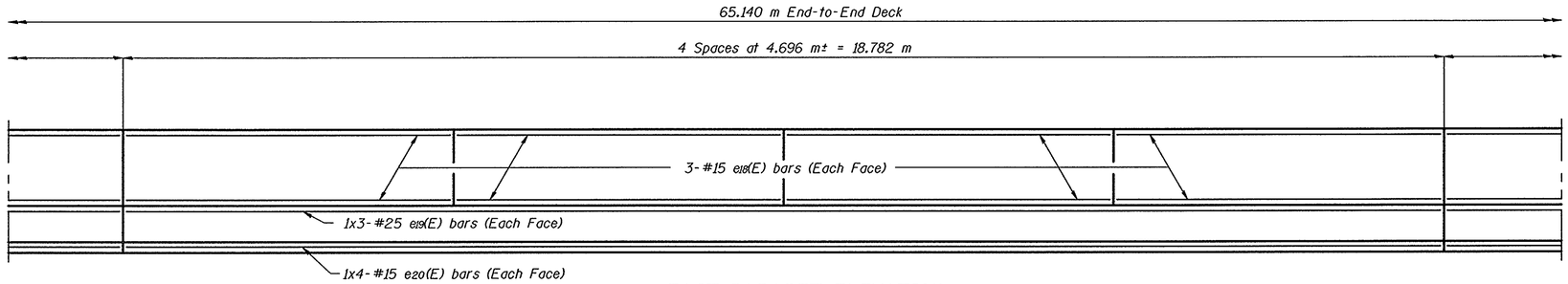

EAST PARAPET ELEVATION
(Looking East at inside face)

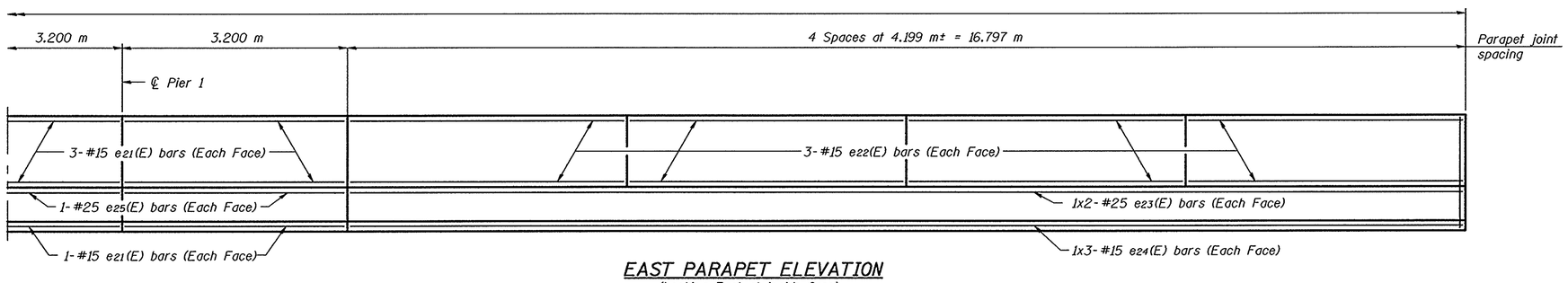

EAST PARAPET ELEVATION
(Looking East at inside face)

DESIGNED	C.M.E.
CHECKED	E.J.C.
DRAWN	M.B.M.
CHECKED	E.J.C. / C.M.E.

November 18, 1999
EXAMINED Thomas J. Domagalski
ENGINEER OF BRIDGE DESIGN
PASSED Ralph E. Anderson
ENGINEER OF BRIDGES AND STRUCTURES

MINIMUM BAR LAP
#15 Bar = 490
#25 Bar = 1.01 m

SUPERSTRUCTURE DETAILS
F.A.S. ROUTE 2245 SEC. 22B-D
BUREAU COUNTY
STATION 5+342.330

STATE OF ILLINOIS
DEPARTMENT OF TRANSPORTATION

ROUTE NO.	SECTION	COUNTY	TOTAL SHEETS	SHEET NO.
F.A.S. 2245	22B-D	BUREAU	66	47
FED. ROAD DIST. NO. 7		ILLINOIS	FED. AID PROJECT-	

SHEET NO. 11
25 SHEETS

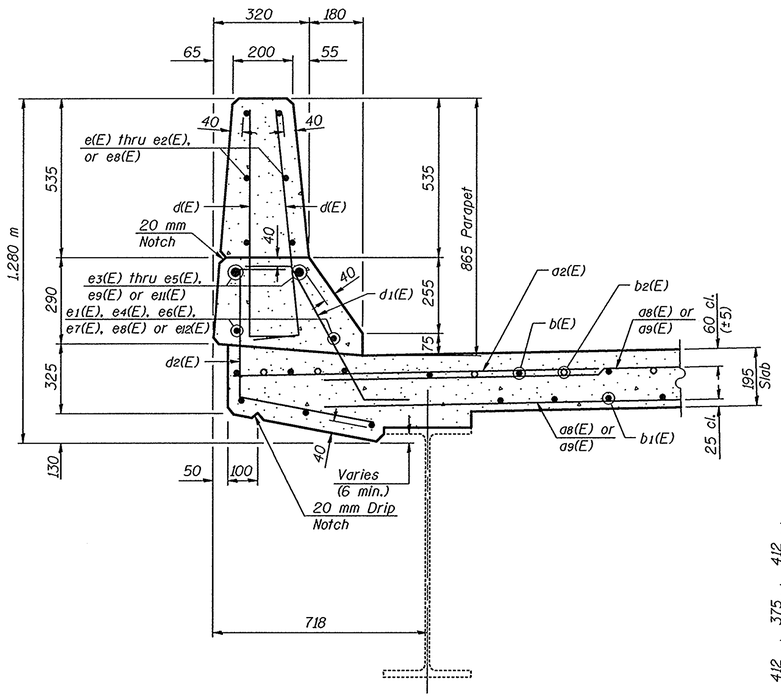

SECTION THRU WEST PARAPET

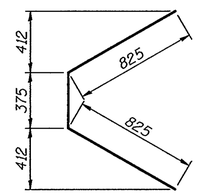

BAR a10(E)

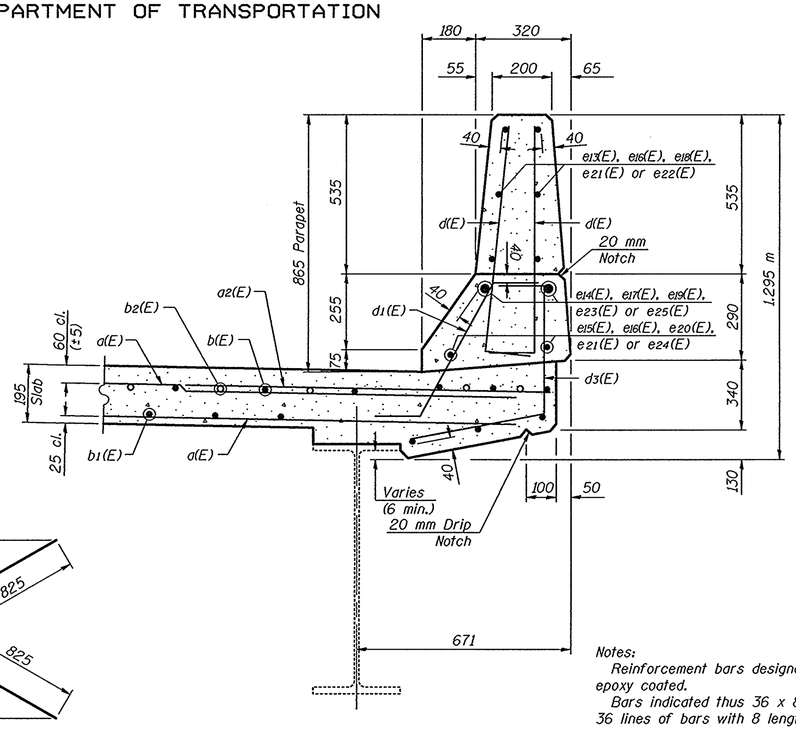

SECTION THRU EAST PARAPET

Notes:
Reinforcement bars designated (E) shall be epoxy coated.
Bars indicated thus 36 x 8-#15 etc. indicates 36 lines of bars with 8 lengths per line.

SUPERSTRUCTURE BILL OF MATERIAL

Bar	No.	Size	Length (m)	Shape
a(E)	705	#15	5.02	
a1(E)	661	#15	5.40	
a2(E)	412	#20	1.20	
a3(E)	4	#15	6.17	
a4(E)	57	#15	6.05	
a5(E)	16	#15	0.60	
a6(E)	2	#15	7.93	
a7(E)	2	#15	9.56	
a8(E)	218	#15	1.97	
a9(E)	443	#15	2.83	
a10(E)	4	#15	2.03	
a11(E)	469	#15	0.94	
a12(E)	1,057	#15	1.02	
b(E)	368	#15	8.71	
b1(E)	468	#15	7.80	
b2(E)	84	#20	14.25	
b3(E)	14	#15	5.50	
d(E)	916	#15	0.96	
d1(E)	478	#15	0.80	
d2(E)	221	#15	1.11	
d3(E)	217	#15	1.12	
e(E)	48	#15	4.19	
e1(E)	16	#15	3.10	
e2(E)	24	#15	4.70	
e3(E)	4	#25	9.02	
e4(E)	4	#25	3.10	
e5(E)	6	#25	7.04	
e6(E)	6	#15	6.00	
e7(E)	8	#15	5.14	
e8(E)	16	#15	3.06	
e9(E)	4	#25	3.06	
e11(E)	4	#25	9.04	
e12(E)	6	#15	6.01	
e13(E)	24	#15	4.11	
e14(E)	4	#25	8.87	
e15(E)	6	#15	5.90	
e16(E)	16	#15	3.06	
e17(E)	4	#25	3.06	
e18(E)	24	#15	4.60	
e19(E)	6	#25	6.90	
e20(E)	8	#15	5.04	
e21(E)	16	#15	3.10	
e22(E)	24	#15	4.10	
e23(E)	4	#25	8.85	
e24(E)	6	#15	5.89	
e25(E)	4	#25	3.10	
x(E)	78	#15	1.28	
Reinforcement Bars, Epoxy Coated			kg	37,340
Concrete Superstructure			m^3	224

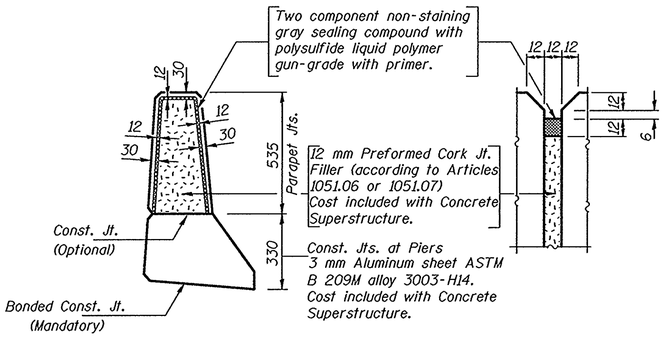

PARAPET JOINT DETAILS

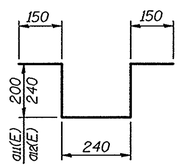

BARS a11(E) & a12(E)

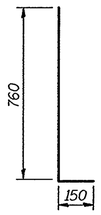

BAR d(E)

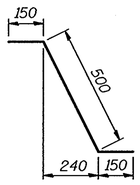

BAR d1(E)

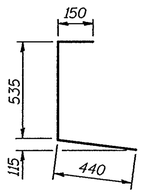

BAR d2(E)

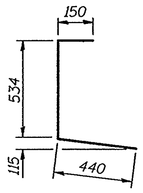

BAR d3(E)

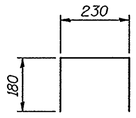

BAR u(E)

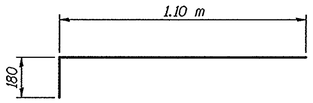

BAR x(E)

DESIGNED	C.M.E.
CHECKED	E.J.C.
DRAWN	M.B.M.
CHECKED	E.J.C. / C.M.E.

November 18, 1999
EXAMINED Thomas J. Domagalski
ENGINEER OF BRIDGE DESIGN
PASSED Ralph E. Anderson
ENGINEER OF BRIDGES AND STRUCTURES

SUPERSTRUCTURE DETAILS
F.A.S. ROUTE 2245 SEC. 22B-D
BUREAU COUNTY
STATION 5+342.330

STATE OF ILLINOIS
DEPARTMENT OF TRANSPORTATION

ROUTE NO.	SECTION	COUNTY	TOTAL SHEETS	SHEET NO.
F.A.S. 2245	22B-D	BUREAU	66	48
FED. ROAD DIST. NO. 7		ILLINOIS	FED. AID PROJECT-	

SHEET NO. 12
25 SHEETS

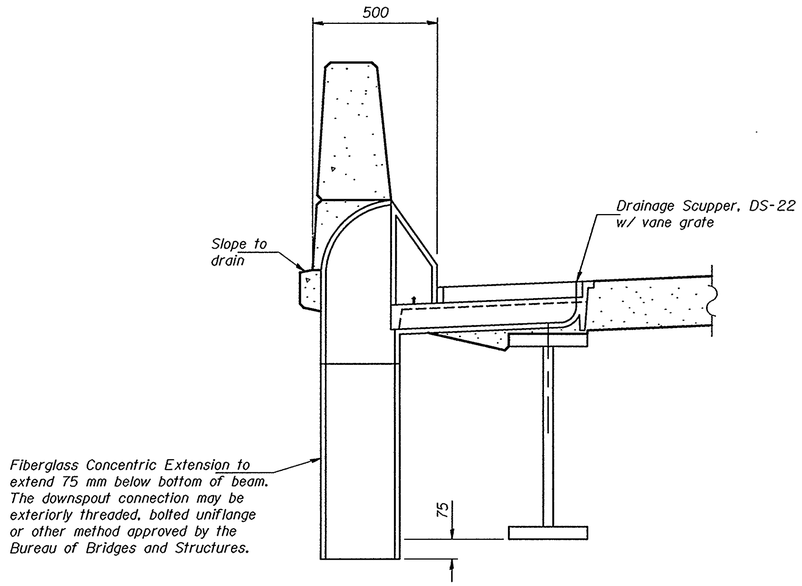

SECTION A-A

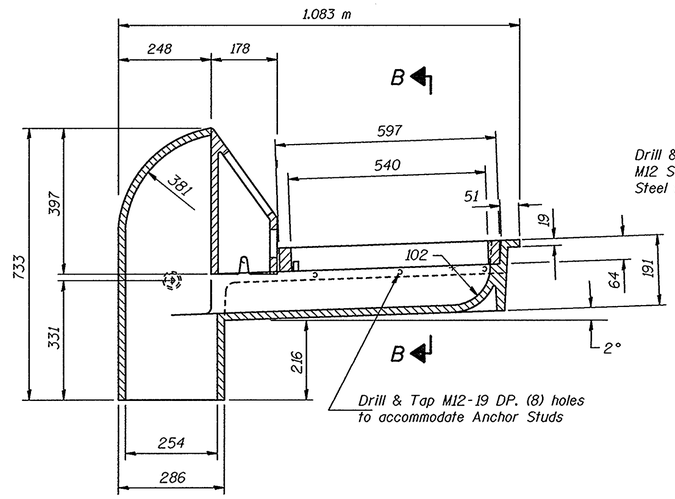

DRAINAGE SCUPPER DETAIL

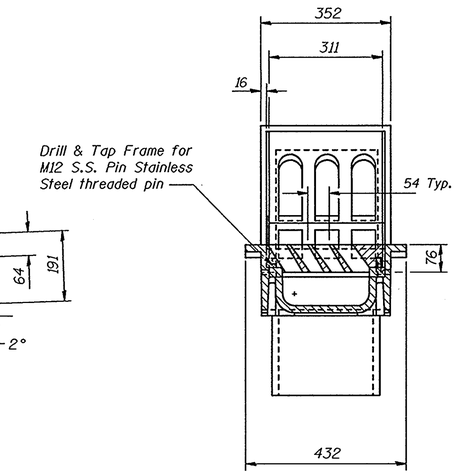

SECTION B-B

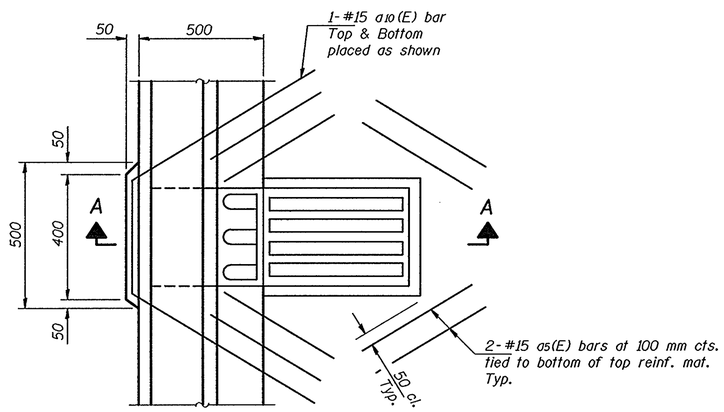

PLAN

Note: Reinforcement bars designated (E) shall be epoxy coated.
Cut longitudinal reinforcement to clear drainage scuppers.

Notes:
All cast iron parts shall be gray iron conforming to the requirements of AASHTO M 105, Class 35B.
Bolts and nuts shall conform to the requirements of ASTM A 307.
All bolts and washers shall be galvanized according to AASHTO M 232.
As an alternate bolts and washers may be stainless steel conforming to the requirements of ASTM A 193 M, Type 304.
Cost of the grate, frame, downspout, bolts and washers including complete installation of scupper will be paid for at the unit bid price each for Drainage Scuppers.
See sheet 11 of 25 for reinforcement quantities.

DESIGNED	C.M.E.
CHECKED	E.J.C.
DRAWN	M.B.M.
CHECKED	E.J.C. / C.M.E.

November 18, 1999
EXAMINED Thomas J. Domagalski
ENGINEER OF BRIDGE DESIGN
PASSED Ralph E. Anderson
ENGINEER OF BRIDGES AND STRUCTURES

DS-22 SCUPPER DETAILS
F.A.S. ROUTE 2245 SEC. 22B-D
BUREAU COUNTY
STATION 5+342.330

ROUTE NO.	SECTION	COUNTY	TOTAL SHEETS	SHEET NO.
F.A.S. 2245	22B-D	BUREAU	66	50
FED. ROAD DIST. NO. 7		ILLINOIS	FED. AID PROJECT-	

SHEET NO. 14
25 SHEETS

STATE OF ILLINOIS
DEPARTMENT OF TRANSPORTATION

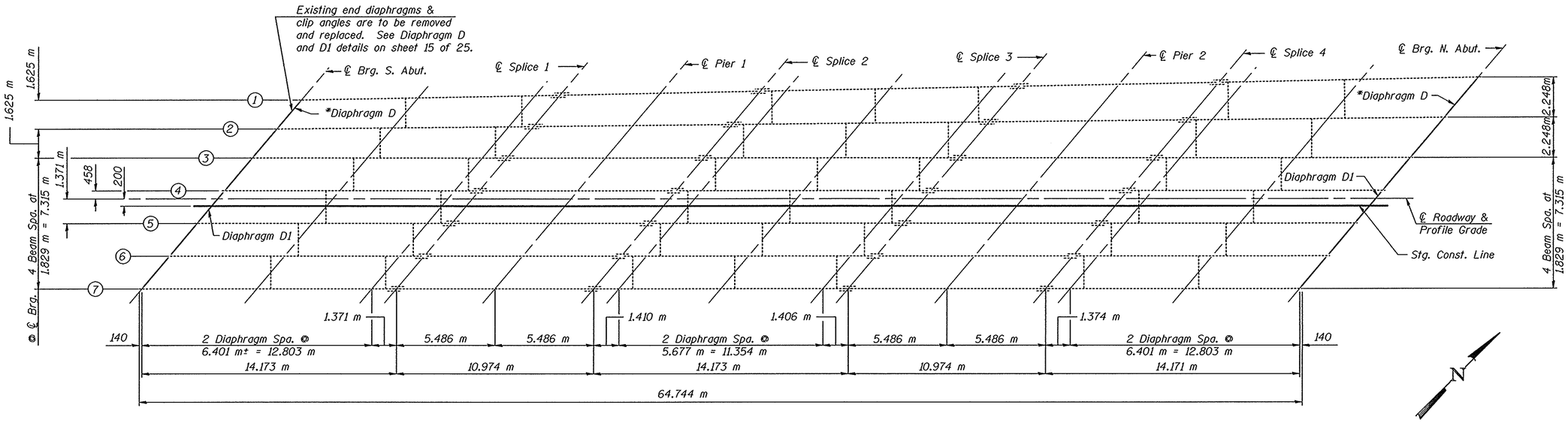

EXISTING FRAMING PLAN

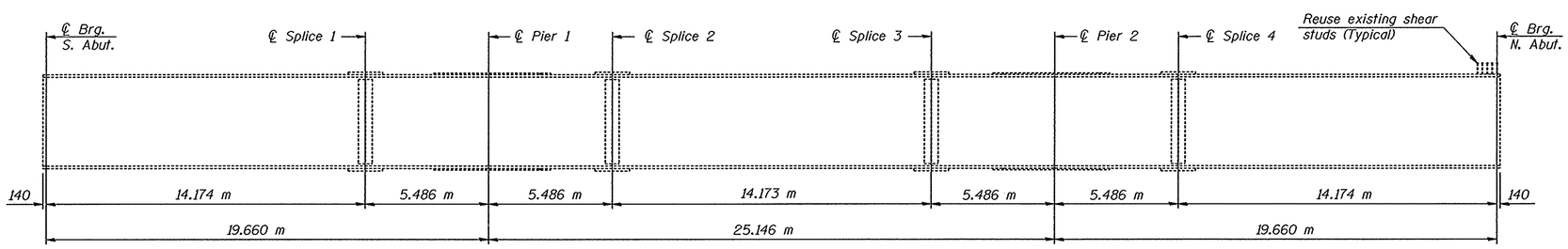

EXISTING BEAM ELEVATION

(All dimensions are taken parallel to ℄ Roadway)
All existing beams are 33WF130 (English).

DESIGNED	C.M.E.
CHECKED	E.J.C.
DRAWN	M.B.M.
CHECKED	E.J.C. / C.M.E.

November 18, 1999
EXAMINED Thomas J. Domagalski
ENGINEER OF BRIDGE DESIGN
PASSED Ralph E. Anderson
ENGINEER OF BRIDGES AND STRUCTURES

* Adjust length of diaphragm in 2 exterior West bays (North and South).

Note: Existing shear studs that are damaged or removed during deck removal shall be replaced in kind. Cost is included with Removal of Existing Concrete Deck.

FRAMING PLAN & ELEVATION
F.A.S. ROUTE 2245 SEC. 22B-D
BUREAU COUNTY
STATION 5+342.330

STATE OF ILLINOIS
DEPARTMENT OF TRANSPORTATION

ROUTE NO.	SECTION	COUNTY	TOTAL SHEETS	SHEET NO.
F.A.S. 2245	22B-D	BUREAU	66	51
FED. ROAD DIST. NO. 7		ILLINOIS	FED. AID PROJECT-	

SHEET NO. 15
25 SHEETS

INTERIOR GIRDER REACTION TABLE			
	Abuts.	Pier 1 or 2	
R℄ (kN)	110	386	
R$_L$ (kN)	178	208	
Imp. (kN)	46	54	
R (Total) (kN)	334	648	

Is and Ss are the moment of inertia and section modulus of the steel section used in computing fs (Total & Overload).

Ic(n) and Sc(n) are the moment of inertia and section modulus of the composite section used in computing stresses due to Live Load.

Ic(3n) and Sc(3n) are the moment of inertia and section modulus of the composite section used in computing stresses due to superimposed dead loads. (according to AASHTO 10.38)

VR is the maximum Live Load + Impact shear range in span.

Z is the plastic section modulus used to determine the fully plastic moments in the non-composite areas.

Ma (Applied Moment)=1.3[M℄ + Ms℄ + $^5/_3$(M$_L$ + M$_{Imp}$)].

The Plastic Moment capacity (Mu) is computed according to AASHTO 10.48.1 and 10.50.1.1.

fs (Overload) is the sum of the stresses due to M℄ + Ms℄ + $^5/_3$(M$_L$ + M$_{Imp}$).

fs (Total) (Non-compact section) is the sum of the stresses due to 1.3[M℄ + Ms℄ + $^5/_3$(M$_L$ + M$_{Imp}$)].

INTERIOR GIRDER MOMENT TABLE			
	0.4 Sp. 1 or 0.6 Sp. 3	Pier 1 or Pier 2	0.5 Sp. 2
Is (10^6 mm^4)	2780	4043	2780
Ic (n) (10^6 mm^4)	7225	-	7225
Ic (3n) (10^6 mm^4)	5272	-	5272
Ss (10^3 mm^3)	6620	9337	6620
Sc (n) (10^3 mm^3)	12527	-	12527
Sc (3n) (10^3 mm^3)	11332	-	11332
Z (10^3 mm^3)	10352	-	10352
℄ (kN/m)	13.4	15.4	13.4
M℄ (kN·m)	331	814	334
s℄ (kN/m)	2.0	-	2.0
Ms℄ (kN·m)	56	-	56
M$_L$ (kN·m)	677	482	758
M (Imp) (kN·m)	179	121	183
$^5/_3$[M$_L$+M(Imp)] (kN·m)	1426.0	1006	1567
Ma (kN·m)	2284	2365	2471
Mu (kN·m)	2630	-	2630
fs℄(non-comp)(MPa)	50	87	51
fs℄(comp) (MPa)	5.0	-	6.0
fs$^5/_3$(L+Imp) (MPa)	114	108	125
fs (Overload) (MPa)	169	195	182
fs (Total) (MPa)	-	253	-
VR (kN)	246.4	-	258.8

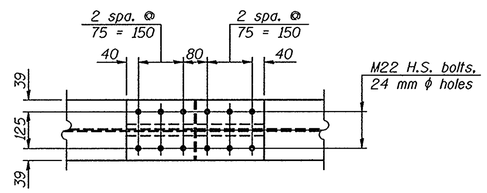

VIEW A-A

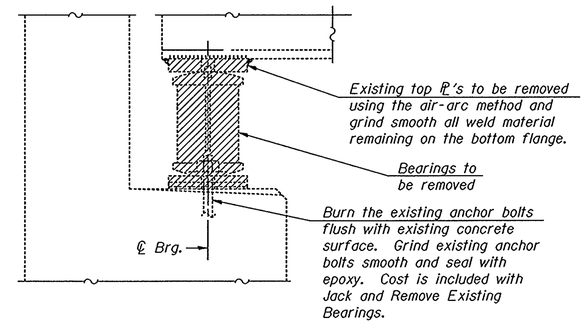

AT ABUTMENTS

EXISTING BEARING REMOVAL

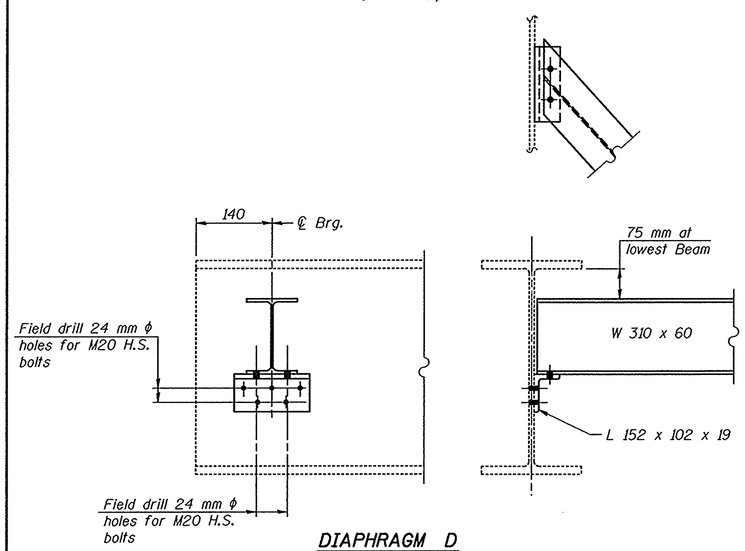

DIAPHRAGM D

12 Required

Note: Two hardened washers shall be required over all oversize holes for diaphragms.

Existing diaphragm to be removed by air-arc method. Grind smooth all weld material on the web.

Cost of field drilling is included with Furnishing and Erecting Structural Steel.

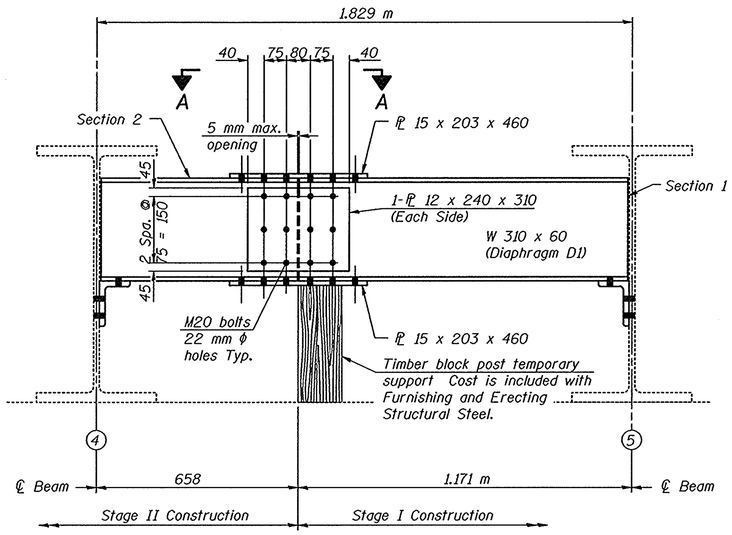

DIAPHRAGM D1 AT STAGE CONSTRUCTION LINE

(Dimensions given are at Rt. L's to ℄ roadway except splice detail dimensions.)

JACK AND REMOVE EXISTING BEARING PROCEDURE

1. Jacking and Removing Existing Bearings shall be done after existing deck removal is complete.
2. The Contractor shall submit for approval by the Engineer, plans for lifting existing beams and installing new bearings prior to commencing any related work. This work shall be done for each stage after existing concrete deck is removed and prior to pouring of the new concrete deck. The maximum dead load reaction per beam (weight of steel only) at North & South Abutments is 14 kN. Minimum jack capacity is 34 kN for North & South Abutments.
3. Prior to ordering any material, the Contractor shall verify steel extension height and shim plate thickness required at each bearing.
4. There shall be at least one jack per bearing and the jack shall be placed close to the bearing. The steel shall be raised a maximum of 6 mm and shall be blocked in position until after the completion of the installation of new bearings.
5. Remove the existing anchor bolts flush with the concrete surface, grind smooth and seal with epoxy. The rockers and top and bottom plates shall be removed.
6. The new bearings and steel extensions shall be in place and the jacks shall be lowered before the new concrete deck is poured.

BILL OF MATERIAL

Item	Unit	Total
Jack and Remove Existing Bearings	Each	14

DIAPHRAGM D1 CONSTRUCTION SEQUENCE

1.) Order Diaphragm D1 in two sections as shown above.
2.) Attach Section 1 to beam 5 along with top flange splice ℙ.
3.) Place timber block posts between section 1 of diaphragm and abutment bearing seat.
4.) Attach section 2 of diaphragm to section 1 and beam 4 during stage II construction.
5.) Attach web splice plates to sections 1 and 2 of diaphragms.
6.) Remove timber block posts.
7.) Attach bottom flange splice plate to sections 1 and 2.

DESIGNED	C.M.E.
CHECKED	E.J.C.
DRAWN	M.B.M.
CHECKED	E.J.C. / C.M.E.

November 18, 1999

EXAMINED Thomas J. Domagalski
ENGINEER OF BRIDGE DESIGN

PASSED Ralph E. Anderson
ENGINEER OF BRIDGES AND STRUCTURES

STRUCTURAL STEEL AND BEARING DETAILS
F.A.S. ROUTE 2245 SEC. 22B-D
BUREAU COUNTY
STATION 5+342.330

ROUTE NO.	SECTION	COUNTY	TOTAL SHEETS	SHEET NO.
F.A.S. 2245	22B-D	BUREAU	66	52
FED. ROAD DIST. NO. 7		ILLINOIS	FED. AID PROJECT-	

SHEET NO. 16
25 SHEETS

STATE OF ILLINOIS
DEPARTMENT OF TRANSPORTATION

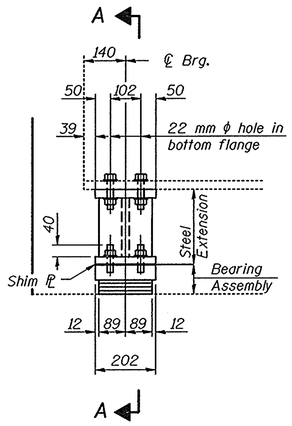

ELEVATION AT SOUTH ABUTMENT

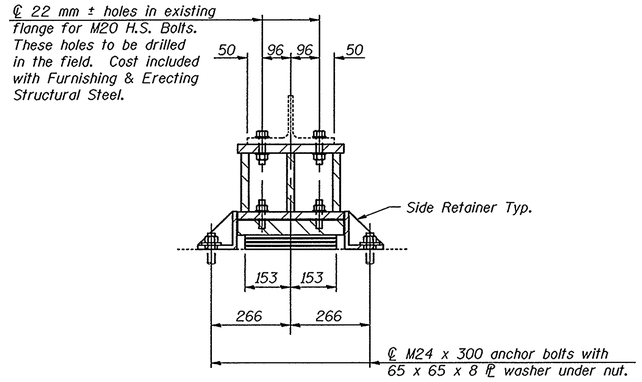

SECTION A-A

TYPE I ELASTOMERIC EXP. BRG.

SHIM PLATE TABLE

Beam	1	2	3	4	5	6	7
℄ Thickness	0	0	0	0	11	5	3

Notes: New steel extensions, side retainers, shim ℙ's, connection bolts, and anchor bolts are included in Furnishing and Erecting Structural Steel.
See Sheets 20 & 25 of 25 for Anchor Bolt installation.
Prior to ordering any material, the Contractor shall verify in the field all bearing height and shim thickness dimensions.

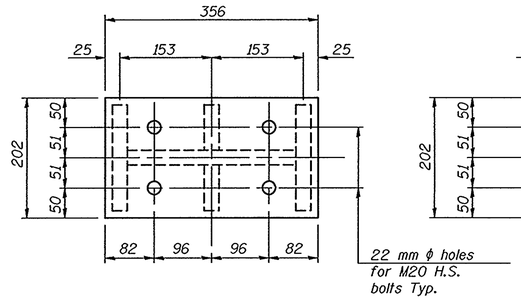

PLAN - TOP PLATE

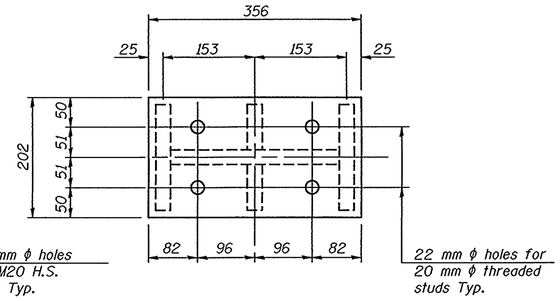

PLAN - BOTTOM PLATE

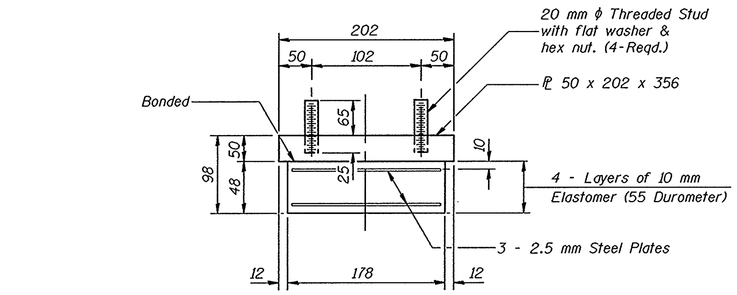

BEARING ASSEMBLY

Note: Shim plates shall not be placed under Bearing Assembly.

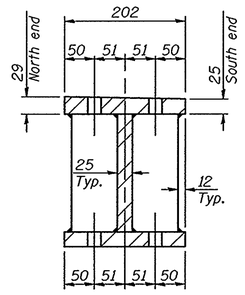

SECTION B-B

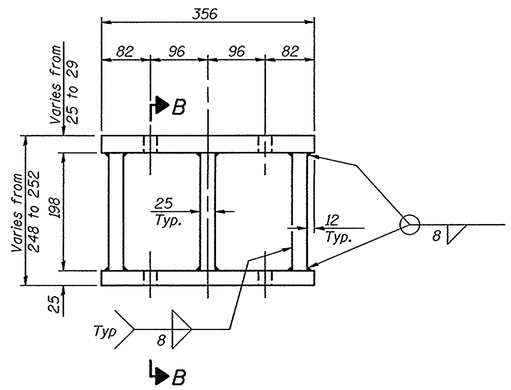

STEEL EXTENSION DETAIL
(7 Required at South Abutment)

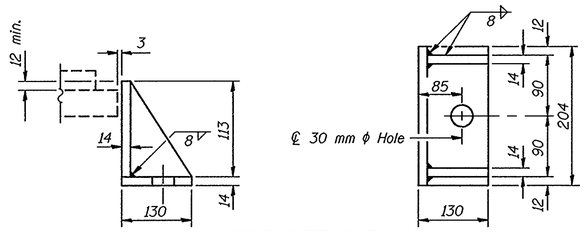

SIDE RETAINER
Equivalent rolled angle with stiffeners will be allowed in lieu of welded plates. Weight included with Structural Steel.

BILL OF MATERIAL

Item	Unit	Total
Elastomeric Bearing Assembly Type I	Each	7

DESIGNED	C.M.E.
CHECKED	E.J.C.
DRAWN	M.B.M.
CHECKED	E.J.C. / C.M.E.

November 18, 1999
EXAMINED Thomas J. Domagalski
ENGINEER OF BRIDGE DESIGN
PASSED Ralph E. Anderson
ENGINEER OF BRIDGES AND STRUCTURES

BEARING DETAILS
F.A.S. ROUTE 2245 SEC. 22B-D
BUREAU COUNTY
STATION 5+342.330

STATE OF ILLINOIS
DEPARTMENT OF TRANSPORTATION

ROUTE NO.	SECTION	COUNTY	TOTAL SHEETS	SHEET NO.
F.A.S. 2245	22B-D	BUREAU	66	53
FED. ROAD DIST. NO. 7		ILLINOIS	FED. AID PROJECT-	

SHEET NO. 17
25 SHEETS

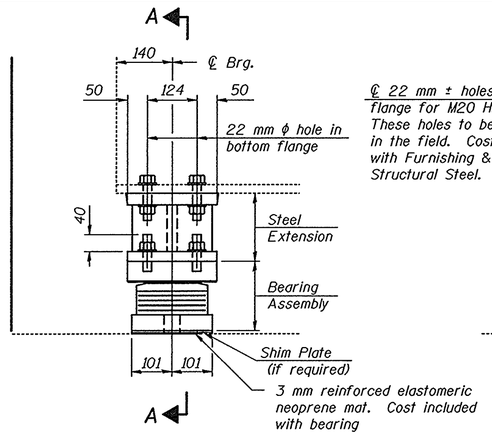

ELEVATION AT NORTH ABUTMENT

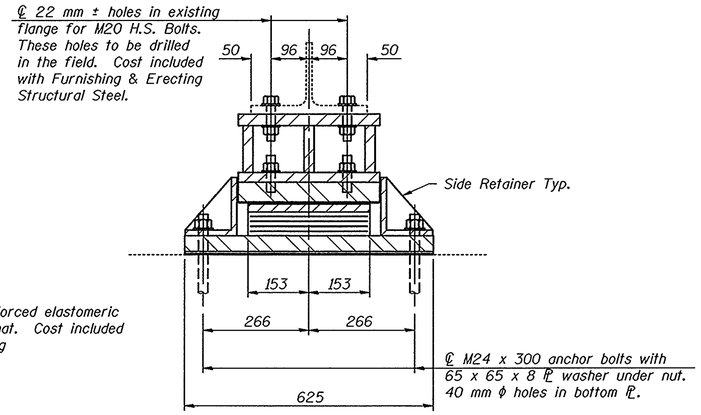

SECTION A-A

TYPE II TFE ELASTOMERIC EXP. BRG.

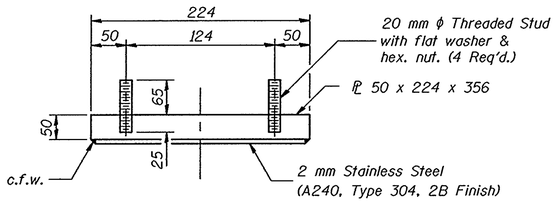

TOP BEARING ASSEMBLY

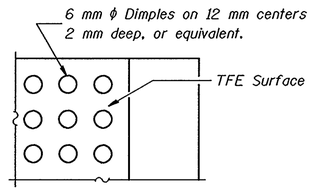

PLAN-TFE SURFACE

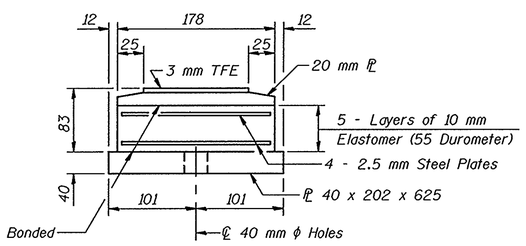

BOTTOM BEARING ASSEMBLY

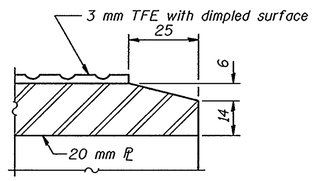

SECTION THRU TFE

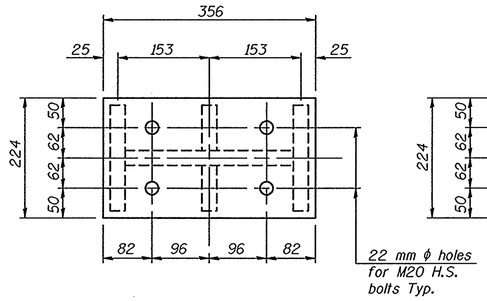

PLAN - TOP PLATE

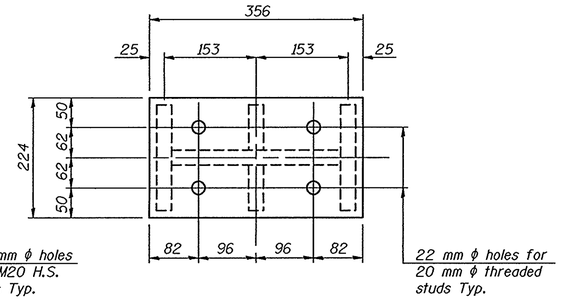

PLAN - BOTTOM PLATE

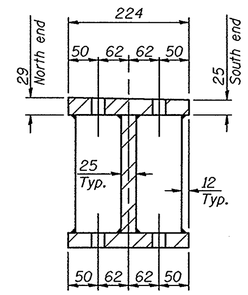

SECTION B-B

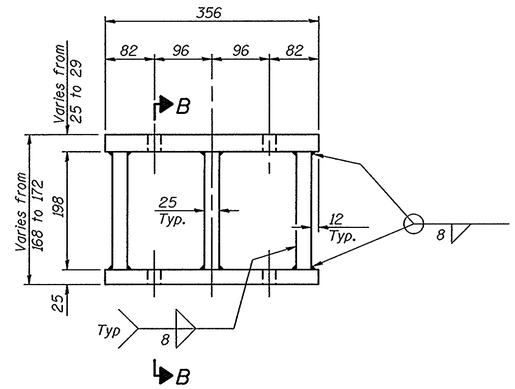

STEEL EXTENSION DETAIL
(7 Required at North Abutment)

SHIM PLATE TABLE

Beam	1	2	3	4	5	6	7
℄ Thickness	0	0	0	0	11	5	3

Note: The 3 mm TFE sheet shall be bonded directly to the top steel plate with a two-component, medium viscosity epoxy resin, conforming to the requirements of the Federal Specification MMM-A-134, Type I. The bond agent shall be applied on the full area of the contact surfaces.

Bonding of 3 mm TFE sheet during vulcanizing process will be permitted provided the process and method of adjusting assembly height is approved by the Engineer.

Notes: New steel extensions, side retainers, shim ⅊'s, connection bolts, anchor bolts and lead plates are included in Furnishing and Erecting Structural Steel.
See Sheets 22 & 25 of 25 for Anchor Bolt installation.
Prior to ordering any material, the Contractor shall verify in the field all bearing height and shim thickness dimensions.

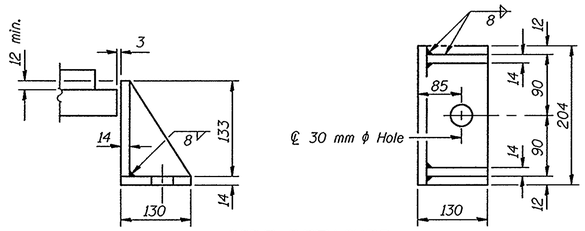

SIDE RETAINER
Equivalent rolled angle with stiffeners will be allowed in lieu of welded plates. Weight included with Structural Steel.

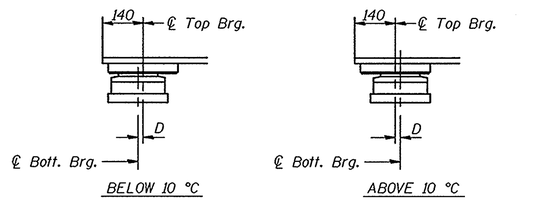

BELOW 10 °C
(Move bott. brg. away from fixed brg.)

ABOVE 10 °C
(Move bott. brg. toward fixed brg.)

SETTING ANCHOR BOLTS AT EXP. BRG.
D= 1 mm per each 10 m of expansion for every 8 °C temp. change from the normal temp. of 10 °C.

BILL OF MATERIAL

Item	Unit	Total
Elastomeric Bearing Assembly Type II	Each	7

DESIGNED	C.M.E.
CHECKED	E.J.C.
DRAWN	M.B.M.
CHECKED	E.J.C. / C.M.E.

November 18, 1999
EXAMINED Thomas J. Domagalski
ENGINEER OF BRIDGE DESIGN
PASSED Ralph E. Anderson
ENGINEER OF BRIDGES AND STRUCTURES

BEARING DETAILS
F.A.S. ROUTE 2245 SEC. 22B-D
BUREAU COUNTY
STATION 5+342.330

ROUTE NO.	SEC.	COUNTY	TOTAL SHEETS	SHEET NO.
FAS 2245	*	BUREAU	66	64
FED ROAD DIST. NO.		ILLINOIS PROJECT		

* 22B-1D & 22B-D

TYPICAL PAVEMENT MARKINGS

TYPICAL PAVEMENT MARKING FOR FLUSH MEDIAN

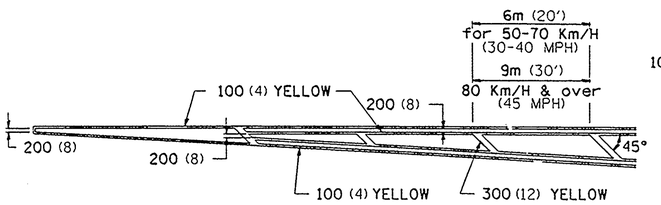

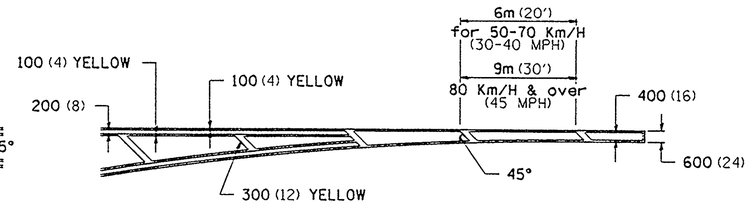

MEDIAN PAVEMENT MARKING

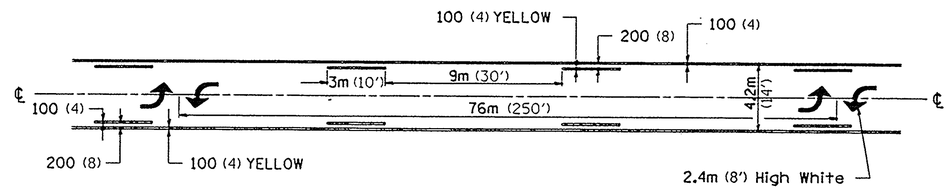

TYPICAL ISLAND OFFSET SHOULDER WIDTH

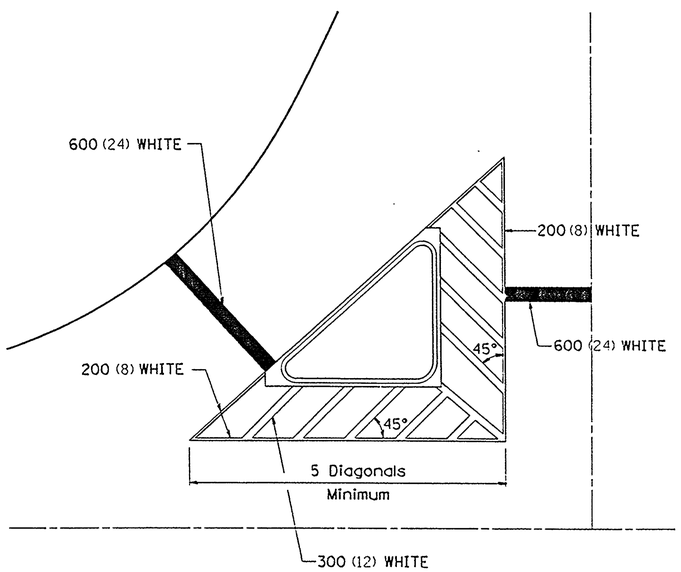

TYPICAL PARKING SPACING

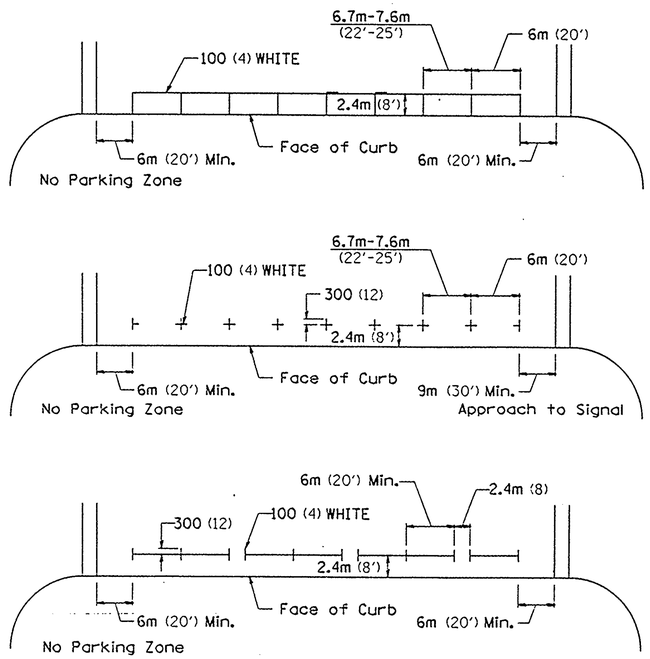

•• ALL DIMENSIONS ARE IN MILLIMETERS (INCHES) UNLESS OTHERWISE NOTED.

STANDARD CROSSWALK MARKING

See Schedules for Locations

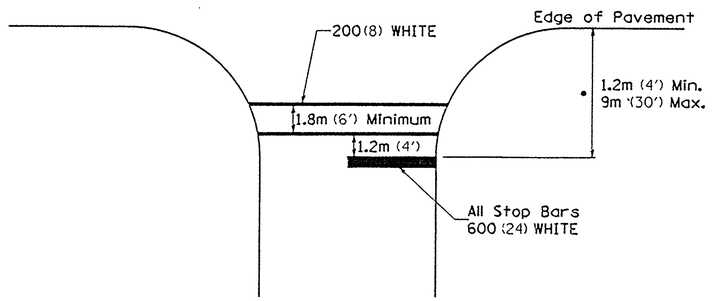

• Distance to the nearest edge of the intersecting roadway in the absence of a marked crosswalk.

CHECKED BY:

DRAWN BY:

DESIGNED BY:

AR CULVERT INSTALLATION

F. A. RTE.	SECTION	COUNTY	TOTAL SHEETS	SHEET NO
STA.	TO STA.			
FED. ROAD DIST. NO. 7	ILLINOIS	FED. AID PROJECT		

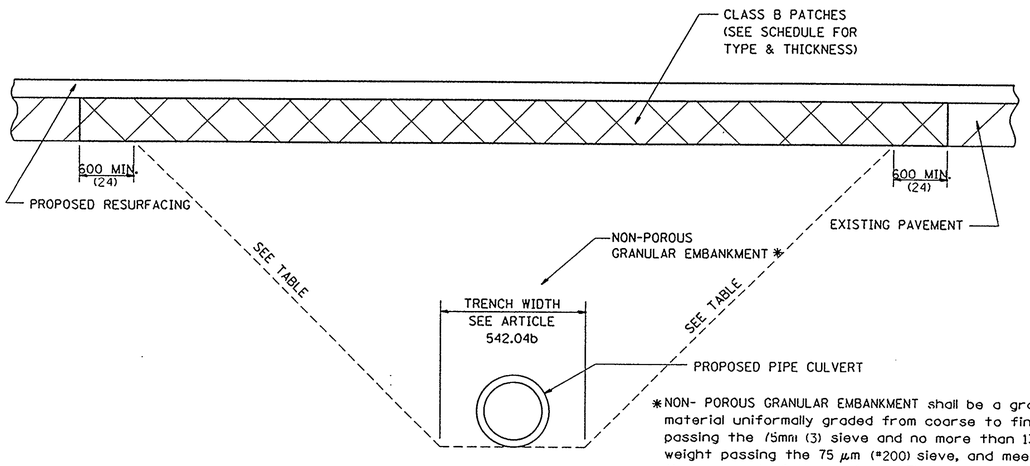

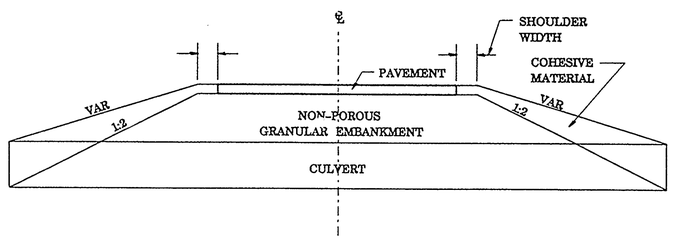

*NON- POROUS GRANULAR EMBANKMENT shall be a granular material uniformally graded from coarse to fine with 100% passing the 75mm (3) sieve and no more than 13% by weight passing the 75 μm (#200) sieve, and meeting the approval of the engineer. The material shall be placed and measured per Articles 207.03 and 207.04 of the Standard Specifications and shall be compacted to not less than 95% of the standard laboratory density.

The maximum volume shall be the demensions and slopes shown by the depth from the bottom of the pavement to the bottom of the culvert.

The cost to furnish and place NON-POROUS GRANULAR EMBANKMENT will be paid at the contract unit price per m^3(Cu. Yd.) for NON-POROUS GRANULAR EMBANKMENT. The pipe culvert, patching, and resurfacing shall be paid for seperately. If the culvert is staged, shoring or bracing may be required at the stage line to retain the backfill The shoring shall not be wood and will be left in place upon completion of the work. The cost of the shoring and bracing shall be included in the contract unit price per m^3(Cu. Yd.) for NON-POROUS GRANULAR EMBANKMENT.

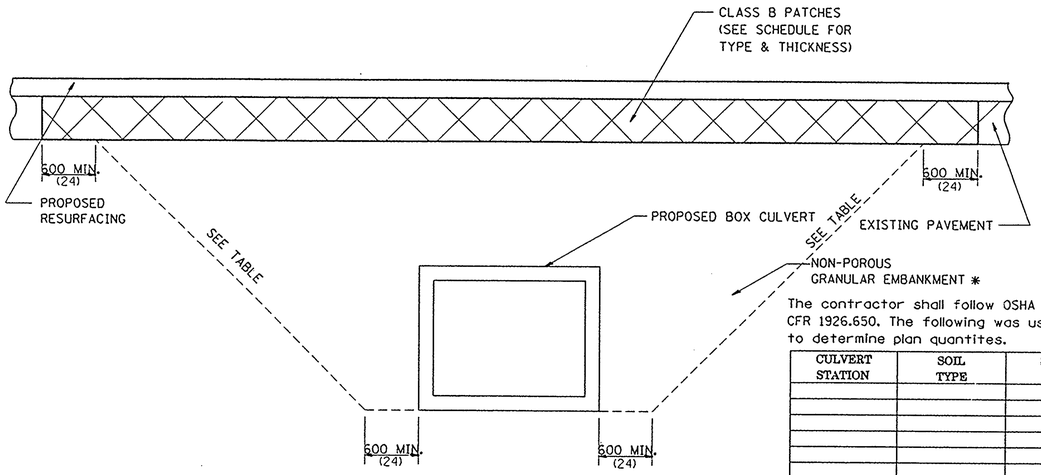

The contractor shall follow OSHA 29 CFR 1926.650. The following was used to determine plan quantites.

CULVERT STATION	SOIL TYPE	SLOPE H:V

ALL DIMENSIONS ARE IN MILLIMETERS (INCHES)
UNLESS OTHERWISE NOTED.

REVISED 7/21/99

BITUMINOUS SHOULDER

ROUTE NO.	SEC.	COUNTY	TOTAL SHEETS	SHEET NO.
FAS 2245	*	BUREAU	66	65
FED ROAD DIST. NO.		ILLINOIS PROJECT		

* 22B-1D & 22B-D

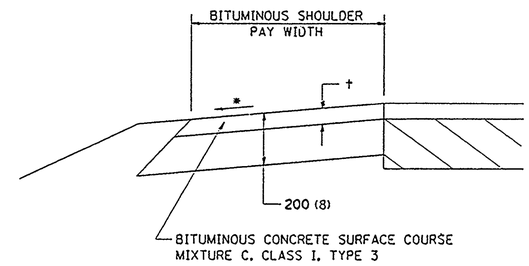

† = SEE TYPICAL SECTIONS
FOR THICKNESS

GENERAL NOTES

THE BITUMINOUS SHOULDER SHALL BE CONSTRUCTED IN ACCORDANCE WITH SECTION 482 EXCEPT THE TOP LIFT SHALL BE BITUMINOUS CONCRETE SURFACE COURSE, MIXTURE C, CLASS I, TYPE 3. THE WORK WILL BE PAID FOR AT THE CONTRACT UNIT PRICE PER SQUARE METER (SQUARE YARD) FOR BITUMINOUS SHOULDERS 200 (8).

USE BITUMINOUS CONCRETE SURFACE COURSE, MIXTURE C, CLASS I, TYPE 3 WHEN RESURFACING EXISTING BITUMINOUS SHOULDERS. THE THICKNESS IS SHOWN ON THE TYPICAL SECTIONS. THIS WORK WILL BE PAID FOR AT THE CONTRACT UNIT PRICE PER TON FOR BITUMINOUS CONCRETE SURFACE COURSE, MIXTURE C, CLASS I, TYPE 3.

* 4% WHEN MAINLINE IS ON TANGENT. FOR CROSS SLOPE ON SUPERELEVATION SECTION, SEE HIGHWAY STANDARD 482001 OR 482006.

ALL DIMENSIONS ARE IN MILLIMETERS (INCHES) UNLESS OTHERWISE NOTED.

DETAIL OF BITUMINOUS SHOULDER AT GUARD RAIL

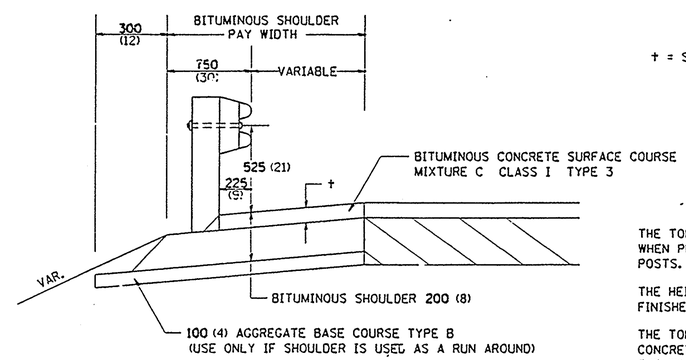

† = SEE TYPICAL SECTIONS
FOR THICKNESS

GENERAL NOTES

THE TOP LIFT SHALL NOT BE PLACED BEHIND THE GUARDRAIL POSTS. WHEN PLACING THE TOP LIFT THE RAIL MUST BE REMOVED FROM THE POSTS. THE POST SHALL NOT BE REMOVED.

THE HEIGHT OF THE GUARD RAIL SHALL BE SET 525 (21) FROM THE FINISHED SURFACE.

THE TOP LIFT OF THE BITUMINOUS SHOULDER SHALL BE BITUMINOUS CONCRETE SURFACE COURSE, MIXTURE C, CLASS I, TYPE 3. THE WORK WILL BE PAID FOR AT THE CONTRACT UNIT PRICE PER SQUARE METER (SQUARE YARD) FOR BITUMINOUS SHOULDERS 200 (8), WHICH SHALL INCLUDE THE REMOVAL AND REINSTALLATION OF THE GUARD RAIL.

ALL DIMENSIONS ARE IN MILLIMETERS (INCHES)
UNLESS OTHERWISE NOTED.

DATE 12-4-97

d:\projects\b22atnd\b22b01d.dgn LVH-63

THRUST BLOCK DETAILS

F. A. RTE.	SECTION	COUNTY	TOTAL SHEETS	SHEET NO
STA.		TO STA.		
FED. ROAD DIST. NO. 7	ILLINOIS	FED. AID PROJECT		

ALL DIMENSIONS ARE IN MILLIMETERS (INCHES) UNLESS OTHERWISE SHOWN.

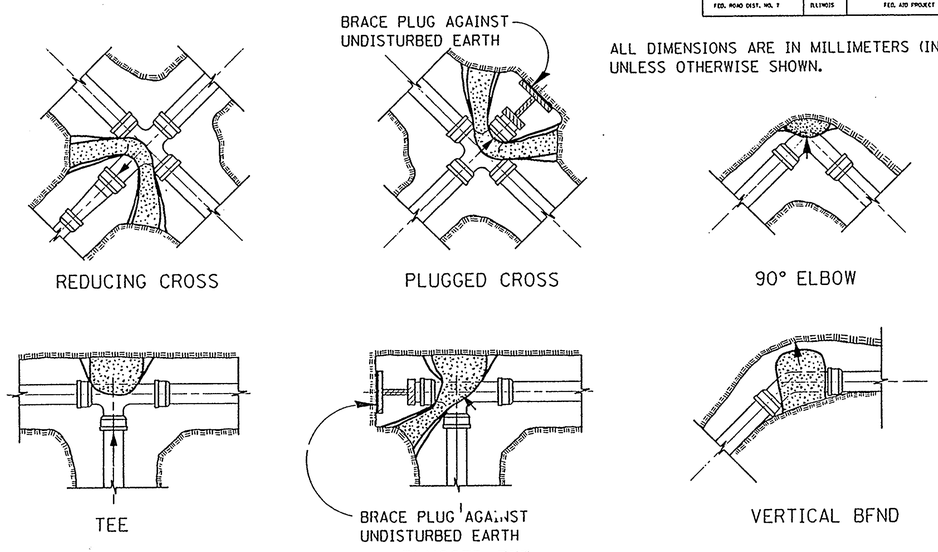

NOTES:
ALL BLOCKS TO BEAR AGAINST UNDISTURBED EARTH.
ARROWS INDICATE DIRECTION OF THRUST.
ALL BLOCKS TO BE CLASS SI CONCRETE.
ALL FITTINGS SHOWN IN PLAN EXCEPT VERTICAL BEND.

REVISED 10/20/87 34.4

Wed Nov 9 14:05:30 1994
/usr/project/dotstnds/236pt4.dgn LV41-63

LETTERING FOR NAME PLATE

ROUTE NO.	SEC.	COUNTY	TOTAL SHEETS	SHEET NO.
FAS 2245	*	BUREAU	66	66
FED ROAD DIST. NO.		ILLINOIS PROJECT		

* 22B-1D & 22B-D

STATION
BUILT 199 BY
STATE OF ILLINOIS
RTE. SEC.
FA PROJECT
LOADING HS 20
STR. NO.

SEE STD. 515001

DESIGNERS NOTE

WHEN USING A DOUBLE BOX CULVERT GET A STRUCTURE NUMBER AND SHOW IT ON THE GENERAL NOTES. IF THE DOUBLE BOX CULVERT IS EQUAL TO OR GREATER THAN 6.1m (20 FT) WIDE INCLUDE A PAY ITEM FOR NAME PLATES AND INCLUDE THIS DETAIL IN THE PLANS.

ALL DIMENSIONS ARE IN MILLIMETERS (INCHES) UNLESS OTHERWISE NOTED.

89.4

SIZE: 600 (24) x 450 (18)

100 (4) CAPITAL LETTERS - BLACK

13 (1/2) BORDER - BLACK

WHITE REFLECTIVE - TYPE B ENGINEERING GRADE SHEETING

GENERAL NOTE:

THIS SIGN SHALL BE INSTALLED AT THE STOP LINE AS DIRECTED BY ENGINEER.

ALL DIMENSIONS ARE IN MILLIMETERS (INCHES) UNLESS OTHERWISE NOTED.

8-7-90 99.4

LANDMARK ENGINEERING 989484