RAILROAD OMISSION:
STA. 1372+05.00 TO STA. 1373+05.00

STATION EQUATION:
STA. 1359+99.91 (BK) =
STA. 1359+99.69 (AH)

① EXISTING TYPICAL CROSS SECTION / LOCATION #4

STATION	TO	STATION
1207+00.00		1386+05.10 ②
② 1397+75.30		1552+29.35

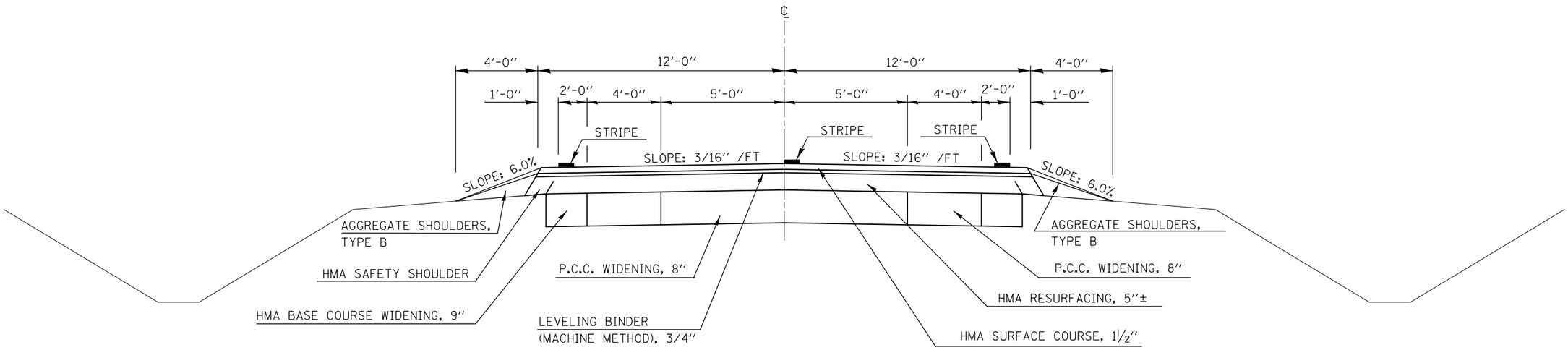

② EXISTING TYPICAL CROSS SECTION / LOCATION #4

STATION	TO	STATION
① 1386+05.10		1397+75.30 ①

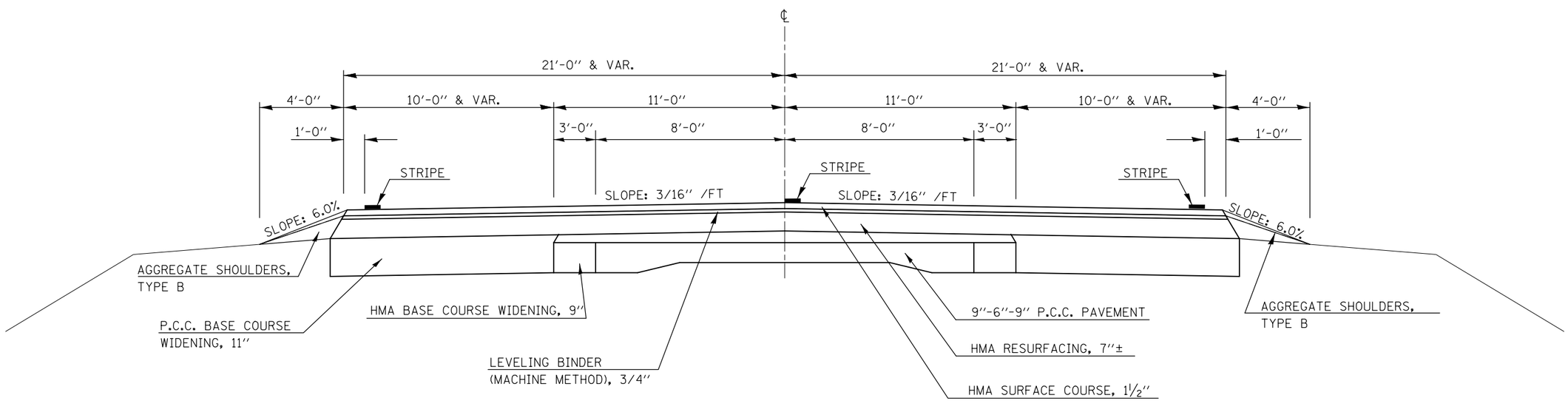

* D5 CRACK & JOINT SEAL 2013-2

FILE NAME = c:\pw_work\pwidot\bakercr\d0327161\D570982-sht-typical.dgn	USER NAME = bakercr	DESIGNED -	REVISED -	STATE OF ILLINOIS DEPARTMENT OF TRANSPORTATION	EXISTING TYPICAL CROSS SECTION LOCATION #4	F.A. RTE.	SECTION	COUNTY	TOTAL SHEETS / SHEET NO.
		DRAWN -	REVISED -			VAR.	*	VARIES	36 / 21
	PLOT SCALE = 40.0000 ' / in.	CHECKED -	REVISED -			CONTRACT NO. 70982			
$MODELNAME$	PLOT DATE = 1/28/2013	DATE -	REVISED -		SCALE: SHEET 1 OF 1 SHEETS STA. TO STA.	ILLINOIS	FED. AID PROJECT		