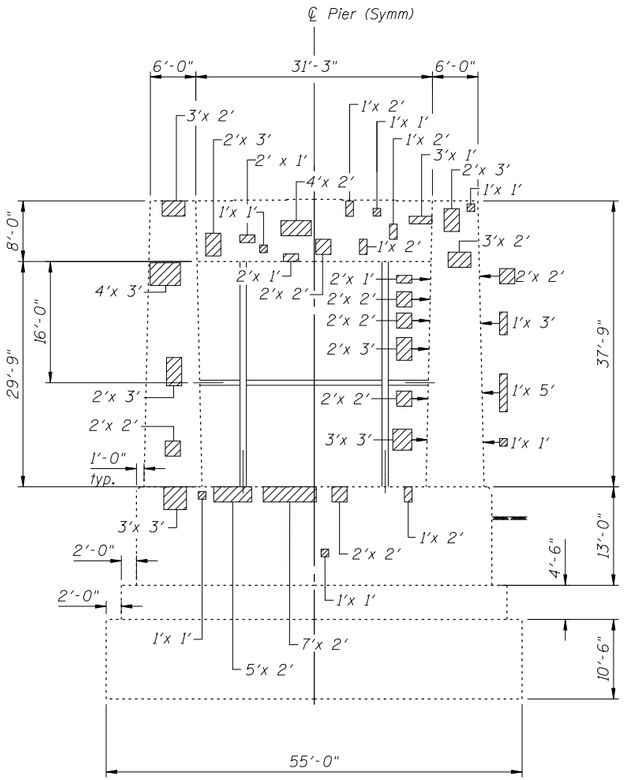

PIER 3 NORTH ELEVATION

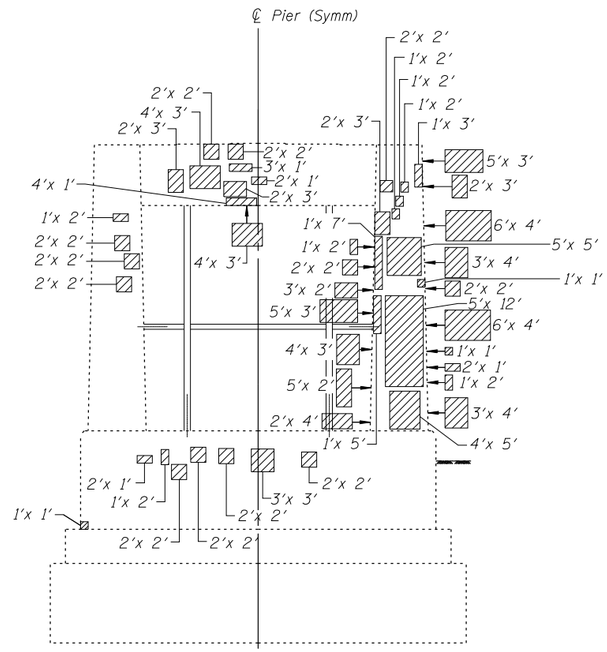

PIER 3 SOUTH ELEVATION

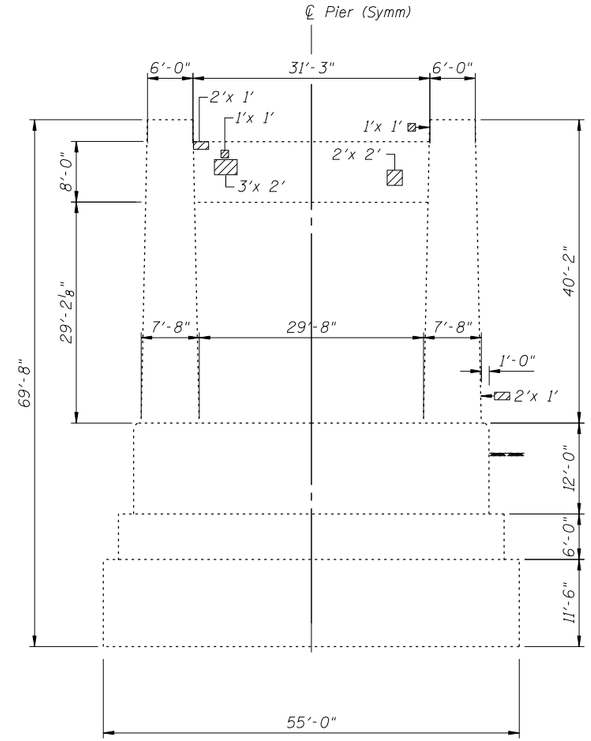

PIER 4 NORTH ELEVATION

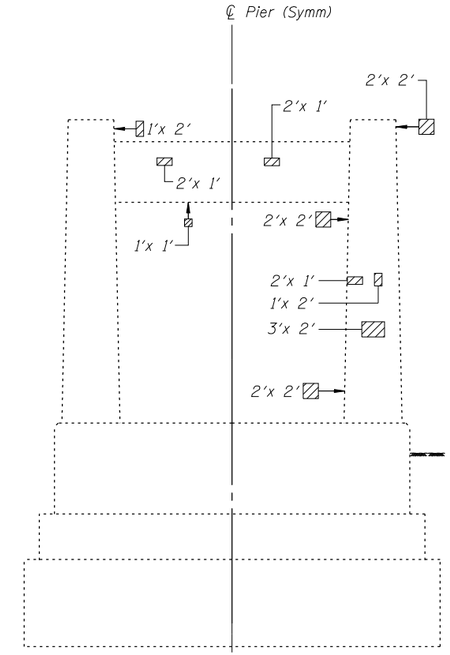

PIER 4 SOUTH ELEVATION

LEGEND:

Structural Repair of Concrete
(Depth Equal to or Less Than 5 Inches)

BILL OF MATERIAL

DESCRIPTION	UNIT	TOTAL
Structural Repair of Concrete (Depth Equal to or Less Than 5 Inches)	Sq Ft	590

FILE NAME = u:\03103_i-55 over des plaines\structural\cadd sheets\016OR62-S8-pier_3-4_NB.dgn

CHRISTIAN-ROGE & ASSOCIATES, INC.	USER NAME = IDOT	DESIGNED - J.C.N./B.N.S./J.W.	REVISED -	STATE OF ILLINOIS DEPARTMENT OF TRANSPORTATION
		CHECKED - B.N.S./J.W.	REVISED -	
	PLOT SCALE = 0:2.0000 ':' / IN.	DRAWN - F.M.	REVISED -	
	PLOT DATE = 1/18/2013	DATE - JANUARY 16, 2013	REVISED -	

PIERS 3 & 4 REPAIRS – NORTHBOUND
STRUCTURE NO. 099-0009

SHEET NO. S58 OF S60 SHEETS

F.A.I. RTE.	SECTION	COUNTY	TOTAL SHEETS	SHEET NO.
55	87B, D-BR-I	WILL	106	94
		CONTRACT NO. 60R62		
		ILLINOIS FED. AID PROJECT		