*Note 1:
Replace broken or missing Rivets or Bolts with $\frac{7}{8}$"φ H.S. Bolts. Cost included with Structural Steel Repair.

*Note 2:
Replace broken plate washer. Replace with same size $2\frac{1}{2}$"x$2\frac{1}{2}$"x$\frac{5}{16}$". Cost included with Structural Steel Repair.

*Note 3:
Repair or replace broken conduit. Cost included with Structural Steel Repair.

*Note 4:
Clean bearings & remove all rust. Cost included with Structural Steel Repair.

*Note 5:
Field weld entire 13" crack. Cost included with Structural Steel Repair.

*Notes refers to specific repairs as indicated in Structural Steel Repair Tables I, II & III. See Sht's. S42, S43 & S49.

GENERAL NOTES:

All holes field drilled into existing members shall be included in the cost of Structural Steel Repair.
Cost of all bolts & washers shall be included in the cost of Structural Steel Repair.

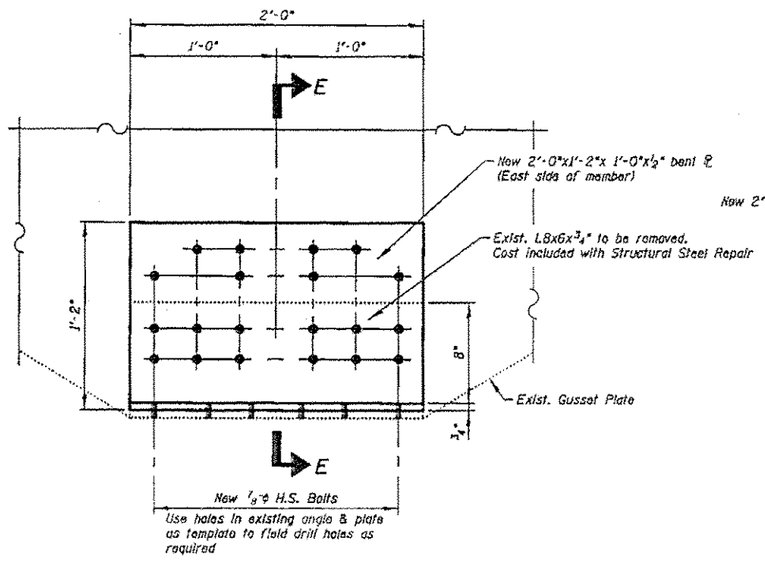

REPAIR NO. N38

REPAIR DETAIL (21)

ELEVATION

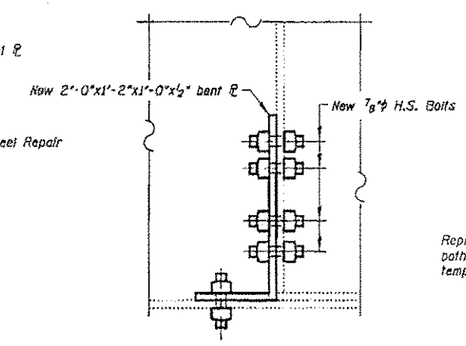

SECTION E-E

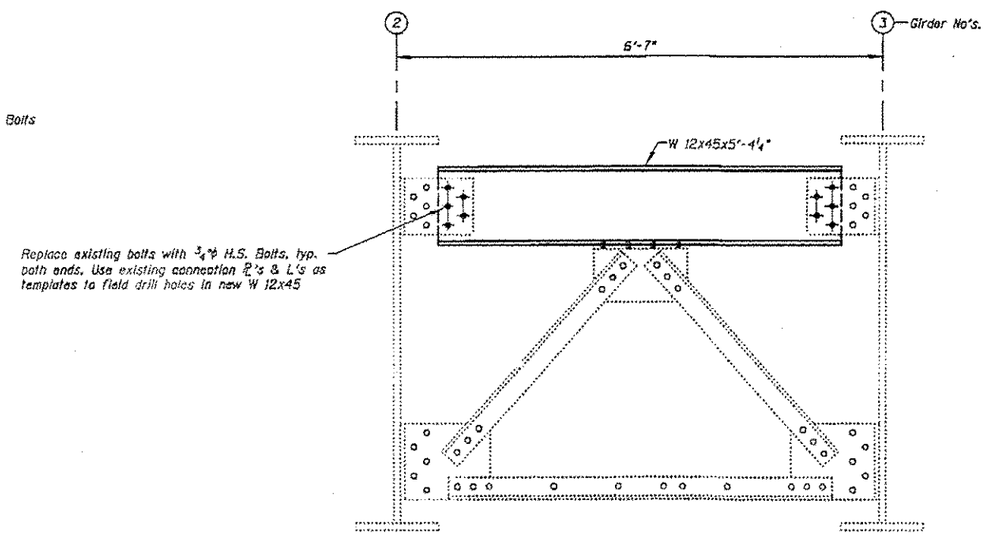

REPAIR NO. N41

REPAIR DETAIL (22)

ELEVATION

FILE NAME = I:\103103.I-55 over Des Plaines\Structural\CADD Sheets\D160R62-49-str-steel-repairs-V.dgn

CHRISTIAN-ROGE & ASSOCIATES, INC.	USER NAME = IDOT	DESIGNED - J.C.N./B.N.S./J.W.	REVISED -	STATE OF ILLINOIS DEPARTMENT OF TRANSPORTATION	STRUCTURAL STEEL REPAIRS-V STRUCTURE NO'S. 099-0008 & 099-0009	F.A.I. RTE. 55	SECTION 87B, D-BR-1	COUNTY WILL	TOTAL SHEETS 106	SHEET NO. 87
		CHECKED - B.N.S./J.W.	REVISED -					CONTRACT NO. 60R62		
	PLOT SCALE = 50.0001 ' / IN.	DRAWN - F.M.	REVISED -							
	PLOT DATE = 3/19/2013	DATE - MARCH 20, 2013	REVISED -		SHEET NO. S49 OF S60 SHEETS		ILLINOIS FED. AID PROJECT			