SEE DRAWING DU-45
MATCH LINE STA. 16+00.00

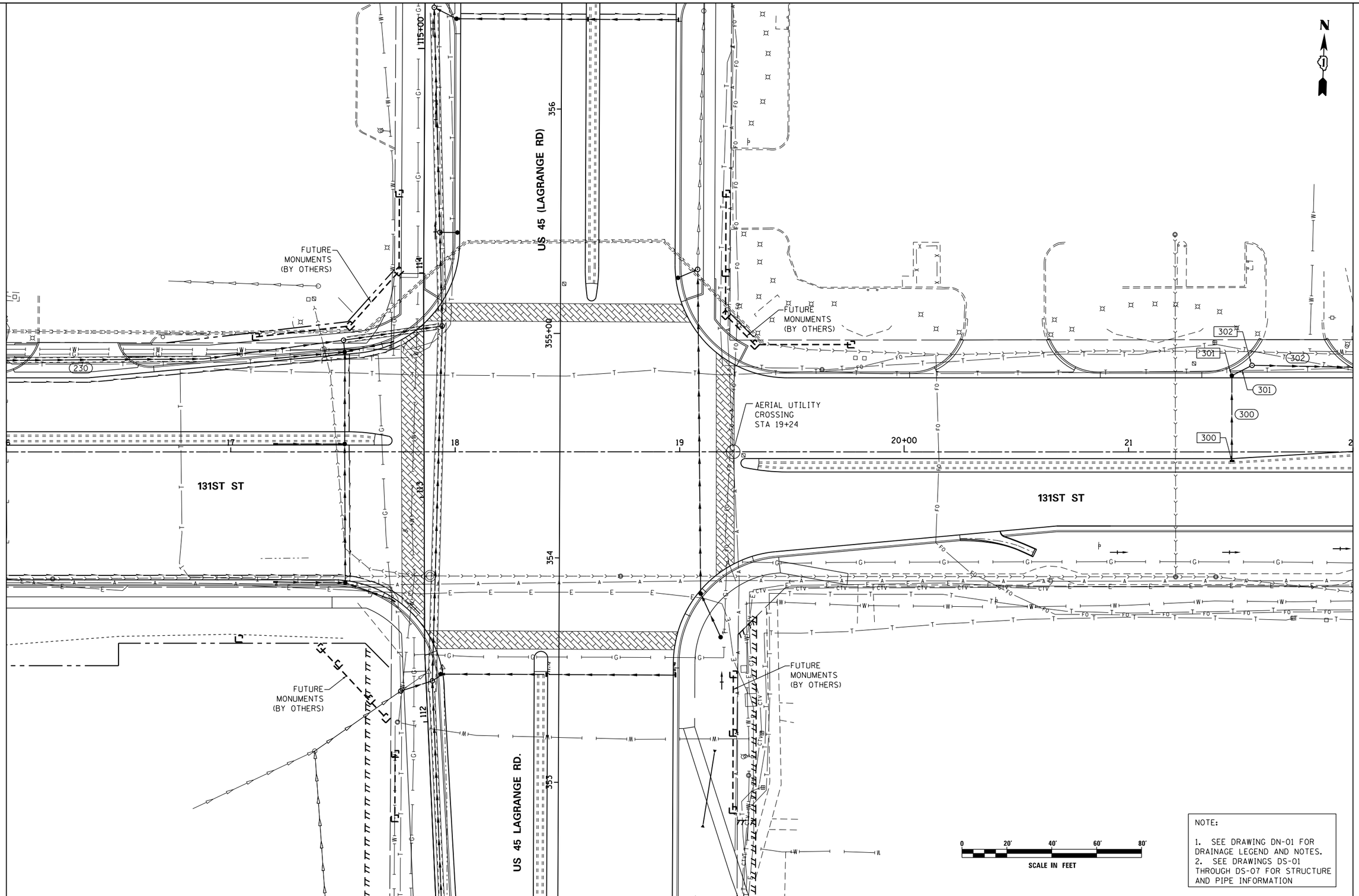

MATCH LINE STA. 22+00.00
SEE DRAWING DU-47

NOTE:

1. SEE DRAWING DN-01 FOR DRAINAGE LEGEND AND NOTES.
2. SEE DRAWINGS DS-01 THROUGH DS-07 FOR STRUCTURE AND PIPE INFORMATION

URS
100 S. WACKER DR.
SUITE 500
CHICAGO IL 60606
TEL (312)939-1000
FAX (312)939-4198

FILE NAME = D160M62-SHT-DRAINPR22.dgn	USER NAME = Anthony.Plutz	DESIGNED - EJD	REVISED -
		DRAWN - EJD	REVISED -
	PLOT SCALE = 40.000000 ' / in.	CHECKED - JWM	REVISED -
SHT_PLAN	PLOT DATE = 3/13/2013	DATE - 03/13/13	REVISED -

STATE OF ILLINOIS
DEPARTMENT OF TRANSPORTATION

PROPOSED DRAINAGE PLAN – 131ST STREET

SCALE: 1"=20' | SHEET 2 OF 3 SHEETS | STA. 16+00.00 TO STA. 22+00.00

F.A.P RTE.	SECTION	COUNTY	TOTAL SHEETS	SHEET NO.
330	103R-5	COOK	778	201
	DU–46	CONTRACT NO. 60M62		
		ILLINOIS FED. AID PROJECT		

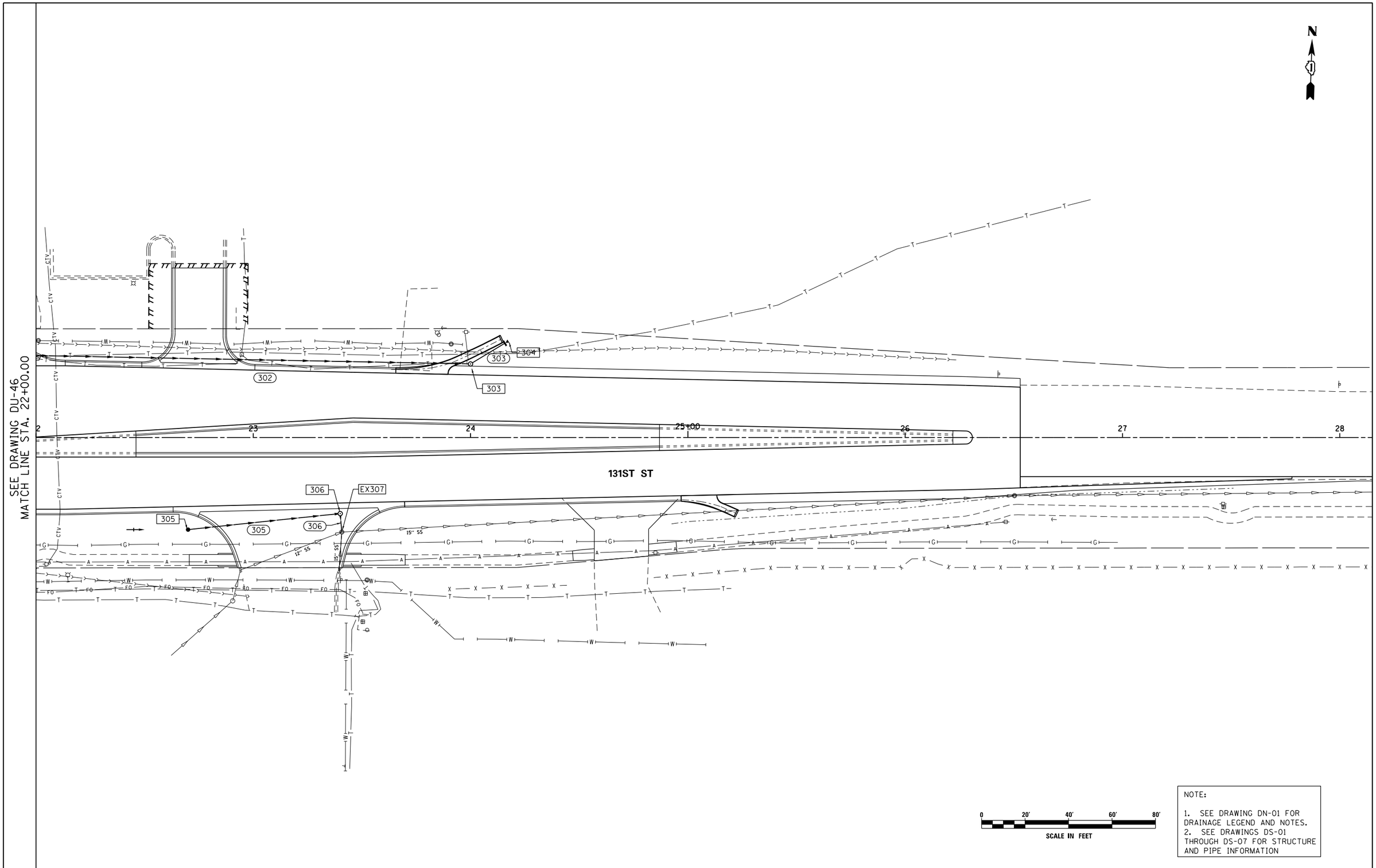

NOTE:

1. SEE DRAWING DN-01 FOR DRAINAGE LEGEND AND NOTES.
2. SEE DRAWINGS DS-01 THROUGH DS-07 FOR STRUCTURE AND PIPE INFORMATION

URS
100 S. WACKER DR.
SUITE 500
CHICAGO, IL 60606
TEL (312)-939-1000
FAX (312)-939-9498

FILE NAME = D160M62-SHT-DRAINPR23.dgn	USER NAME = Anthony.Plutz	DESIGNED - EJD	REVISED -	STATE OF ILLINOIS DEPARTMENT OF TRANSPORTATION	PROPOSED DRAINAGE PLAN – 131ST STREET	F.A.P RTE.	SECTION	COUNTY	TOTAL SHEETS	SHEET NO.
		DRAWN - EJD	REVISED -			330	103R-5	COOK	778	202
	PLOT SCALE = 40.000000 ' / in.	CHECKED - JWM	REVISED -			DU-47		CONTRACT NO. 60M62		
SHT_PLAN	PLOT DATE = 3/13/2013	DATE - 03/13/13	REVISED -		SCALE: 1"=20' SHEET 3 OF 3 SHEETS STA. 22+00.00 TO STA. END	ILLINOIS	FED. AID PROJECT			

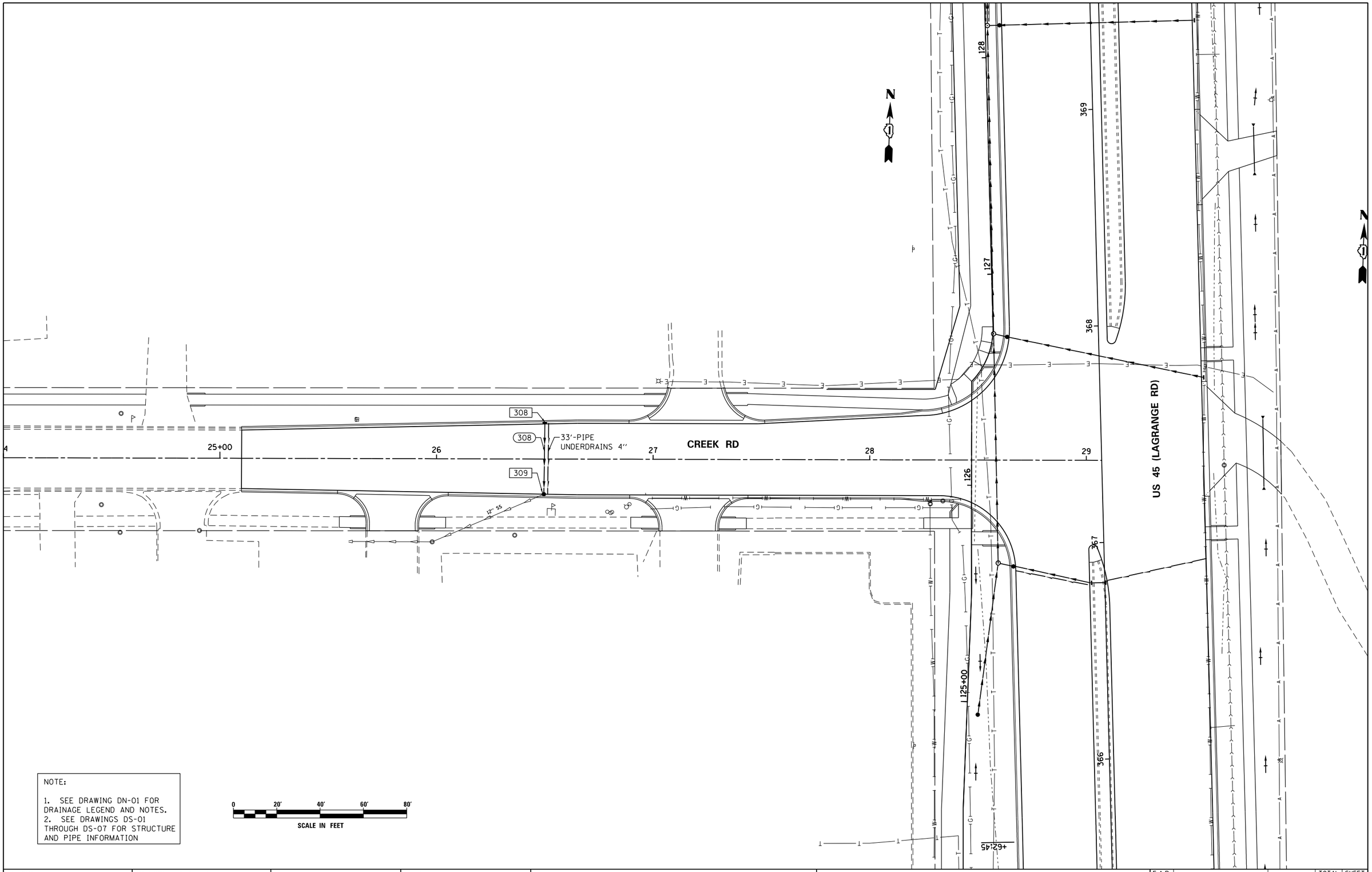

NOTE:

1. SEE DRAWING DN-01 FOR DRAINAGE LEGEND AND NOTES.
2. SEE DRAWINGS DS-01 THROUGH DS-07 FOR STRUCTURE AND PIPE INFORMATION

URS
100 S. WACKER DR.
SUITE 500
CHICAGO IL 60606
TEL (312)939-1000
FAX (312)939-4198

FILE NAME = D160M62-SHT-DRAINPR24.dgn	USER NAME = Anthony_Plutz	DESIGNED - EJD	REVISED -
		DRAWN - EJD	REVISED -
	PLOT SCALE = 40.000000 ' / in.	CHECKED - JWM	REVISED -
SHT_PLAN	PLOT DATE = 3/13/2013	DATE - 03/13/13	REVISED -

STATE OF ILLINOIS
DEPARTMENT OF TRANSPORTATION

PROPOSED DRAINAGE PLAN – CREEK RD

SCALE: 1"=20' | SHEET 1 OF 1 SHEETS | STA. 25+00.00 TO STA. 29+07.12

F.A.P RTE.	SECTION	COUNTY	TOTAL SHEETS	SHEET NO.
330	103R-5	COOK	778	203
	DU-48	CONTRACT NO. 60M62		
		ILLINOIS FED. AID PROJECT		

STRUCTURE SCHEDULE

Drawing	STR. NO.	STA.	OFFSET	STRUCTURE	COVER	FINAL RIM ELEV. CONTRACT 60F05	N	E	S	W
DU-25	900	289+50.0	48.0' LT	IN TA 2	T24 F&G	683.37		679.00(E) 12"		
	901	289+50.0	14.0' LT	IN TB 3	T23 F&G	684.10		676.50(E) 12"		678.63(W) 12"
*	902	289+50.0	14.0' RT	CB TA 4	T23 F&G	684.10		674.32(NE) 12"		676.25(W) 12"
	903	289+50.0	48.0' RT	CB TA 4	T24 F&G	683.37	678.00(NE) 12"	679.77(E) 12"		
	903A	289+47.0	72.3' RT	CB TA 4	TY8 GR	685.34				680.00(W) 12"
	904	289+60.0	25.4' RT	MH TA 6	T1F CL	683.69		673.56(E) 48"	675.64(S) 42"	674.21(SW) 12"
	905	289+69.2	59.3' RT	JUNCTION CHAMBER	T1F CL	683.55	673.30(N) 6'x3' BOX		677.84(SW) 12"	673.30(W) 48"
DU-26	906	290+75.0	48.0' LT	IN TA 2	T24 F&G	681.48		677.11(E) 12"		
	907	290+75.0	48.0' RT	CB TA 4	T24 F&G	681.48		673.48(E) 12"		675.48(W) 12"
	908	290+75.0	57.0' RT	JUNCTION CHAMBER	T1F CL	681.98	673.10(N) 6'x3' BOX		673.10(S) 6'x3' BOX	673.45(W) 12"
	909	292+00.0	48.0' LT	IN TA 2	T24 F&G	680.09		675.72(E) 12"		
	910	292+00.0	14.0' LT	IN TB 3	T23 F&G	680.83		675.25(E) 12"		675.50(W) 12"
*	911	292+00.0	14.0' RT	CB TA 4	T23 F&G	680.83		674.80(E) 12"		675.00(W) 12"
	912	292+00.0	48.0' RT	CB TA 4	T24 F&G	680.09		674.43(E) 12"		674.60(W) 12"
	913	292+00.0	56.9' RT	JUNCTION CHAMBER	T1F CL	680.60	672.82(N) 6'x3' BOX		672.82(S) 6'x3' BOX	674.40(W) 12"
	914	293+20.7	50.4 RT	JUNCTION CHAMBER	T1F CL	679.41	672.59(N) 6'x3' BOX		672.59(S) 6'x3' BOX	
	916	294+30.0	48.0' LT	CB TA 4	T24 F&G	678.58	674.00(N) 12"		673.80(S) 12"	
	916A	293+85.0	48.0' LT	CB TA 4	T24 F&G	678.68	674.10(N) 12"		674.30(S) 12"	674.36(W) 12"
	916B	293+85.0	66.6' LT	IN TB 3	T10 F&G	686.70		674.52(E) 12"		
	916C	293+28.0	48.0' LT	IN TA 2	T24 F&G	678.95	674.58(N) 12"			
	917	294+70.0	48.0' LT	IN TB 3	T24 F&G	678.56	674.00(N) 12"		673.80(S) 12"	
	917A	295+93.0	48.0' LT	IN TA 2	T24 F&G	678.99			674.62(S) 12"	
	918	294+57.0	48.0' LT	CB TA 4	T24 F&G	678.56	673.75(N) 12"	673.55(E) 24"	673.75(S) 12"	
	919	294+57.0	14.0' LT	CB TA 4	T23 F&G	679.30		673.15(NE) 24"		673.35(W) 24"
*	920	294+57.0	14.0' RT	IN TA 2	T23 F&G	679.30	674.28(N) 12"			
	921	294+75.0	14.0' RT	MH TA 6	T1F CL	679.30		672.90(SE) 24"	674.18(S) 12"	673.00(SW) 24"
	922	294+41.0	48.0' RT	CB TA 4	T24 F&G	678.57	673.80(N) 12"		674.00(S) 12"	
	922A	293+28.0	48.0' RT	IN TA 2	T24 F&G	678.95	674.58(N) 12"			
	923	294+70.0	48.0' RT	CB TA 4	T24 F&G	678.56	674.00(N) 12"		673.80(S) 12"	
	923A	295+93.0	48.0' RT	IN TA 2	T24 F&G	679.00			674.63(S) 12"	
	925	294+57.0	55.1' RT	JUNCTION CHAMBER	T24 F&G	679.11 (E) RIM	672.60(NW) 24"	673.70(N) 12"	672.35(N) 6'x3' BOX	673.70(S) 12"
	926	295+00.0	53.5' RT	MH TA 8D/R-PLT	2-T1F CL	679.00	672.26(N) 48"		672.26(S) 6'x3' BOX	
	926A	295+20.0	53.6' RT	CONNECT TO 48" PIPE		N/A		673.86(E) 12"		
	926B	295+20.0	61.7' RT	WYE ELEVATION		N/A				
	926C	295+20.0	68.0' RT	CB TC 2	TY8 GR	688.60				676.22(W) 12"
DU-27	927	297+03.0	54.2' RT	JUNCTION CHAMBER	T1F CL	680.42	671.76(NE) 48"		671.77(S) 48"	671.80(SW) 48"
	928	301+95.0	46.3' LT	IN TA 2	T24 F&G	688.34		683.97(E) 12"		
	929	301+95.0	12.3' LT	IN TB 3	T23 F&G	689.08		683.50(E) 12"		683.70(W) 12"
*	930	301+95.0	15.7' RT	CB TA 4	T23 F&G	689.08		683.00(E) 12"		683.25(W) 12"
	931	301+95.0	49.7' RT	CB TA 4	T24 F&G	688.34		682.55(SE) 12"		682.75(W) 12"
	932	301+90.0	57.3' RT	MH TA 5	T1F CL	688.76	682.60(N) 12"		682.04(S) 12"	682.50(NW) 12"
	933	300+78.0	46.8' LT	IN TA 2	T24 F&G	686.49		682.12(E) 12"		
	934	300+78.0	49.2' RT	CB TA 4	T24 F&G	686.50		680.41(SE) 12"		681.61(W) 12"
	935	300+73.0	56.8' RT	MH TA 5	T1F CL	686.88	678.68(N) 12"		678.36(S) 12"	680.36(NW) 12"
	936	299+60.0	47.3' LT	IN TA 2	T24 F&G	684.25		679.88(E) 12"		
	937	299+60.0	13.3' LT	IN TB 3	T23 F&G	684.99		679.40(E) 12"		679.60(W) 12"
*	938	299+60.0	14.7' RT	CB TA 4	T23 F&G	684.99		678.90(E) 12"		679.10(W) 12
	939	299+60.0	48.7' RT	CB TA 4	T24 F&G	684.25		678.40(SE) 12"		678.60(W) 12"
	940	299+55.0	56.3' RT	MH TA 5	T1F CL	684.64	674.97(N) 12"		674.70(S) 30"	678.35(W) 12"
	941	298+45.0	47.8' LT	IN TA 2	T24 F&G	682.08		677.71(E) 12"		
	942	298+45.0	48.2' RT	CB TA 4	T24 F&G	682.08		676.36(SE) 12"		677.00(W) 12"
	943	298+42.0	55.9' RT	MH TA 6	T1F CL	682.50	674.33(N) 30"		674.33(S) 30"	676.33(W) 12"
	944	297+30.0	48.0' LT	IN TA 2	T24 F&G	680.30		675.80(E) 12"		
	945	297+30.0	14.0' LT	IN TB 3	T23 F&G	681.04		675.27(E) 12"		675.47(W) 12"
*	946	297+30.0	14.0' RT	CB TA 4	T23 F&G	681.04		674.84(E) 12"		675.04(W) 12"
	947	297+30.0	48.0' RT	CB TA 4	T24 F&G	680.30		674.50(SE) 15"		674.52(W) 12"
	948	297+26.0	55.6' RT	MH TA 7D/R-PLT	2-T1F CL	680.76	674.00(N) 30"	673.81(SE) 24"		674.48(NW) 12"
	949	297+16.0	66.6' RT	MH TA 7	T1F CL	683.23	671.76(NE) 48"		671.75(SW) 48"	673.75(NW) 24"

PIPE SCHEDULE

SHEET	PIPE NO.	STR. NO. FROM	STR. NO. TO	DESCRIPTION	IN DIA.	FT LEN	SLOPE	CU YD TBF
DU-25	900	900	901	SS, CL A, TY 2	12	33.3	1.11%	7.9
	901	901	902	SS, CL A, TY 2	12	23	1.09%	19
	902	902	904	SS, CL A, TY 2	12	10.7	1.03%	12.3
	903A	903A	903	SS, CL A, TY 2	12	19.5	1.18%	2.1
	903	903	905	SS, CL A, TY 2	12	14.7	1.09%	0.6
	904	904	905	SS, CL A, TY 2	48	26	1.00%	37.9
	905	905	908	6'x3' BOX CULVERT		102.5	0.20%	
DU-26	906	906	907	SS, CL A, TY 2	12	95	1.72%	24.4
	907	907	908	SS, CL A, TY 2	12	5	0.60%	2.8
	908	908	913	6'x3' BOX CULVERT		120	0.23%	
	909	909	910	SS, CL A, TY 2	12	33.3	0.66%	7.9
	910	910	911	SS, CL A, TY 2	12	23	1.09%	7.4
	911	911	912	SS, CL A, TY 2	12	31.8	0.63%	10.2
	912	912	913	SS, CL A, TY 2	12	4.9	0.61%	1.7
	913	913	914	6'x3' BOX CULVERT		118.9	0.19%	
	914	914	925	6'x3' BOX CULVERT		129	0.19%	
	916C	916C	916A	SS, CL A, TY 2	12	54	0.52%	9.3
	916B	916B	916A	SS, CL A, TY 3	12	14.1	1.13%	13
	916A	916A	916	SS, CL A, TY 2	12	41	0.73%	8.8
	916	916	918	SS, CL A, TY 2	12	23	1.09%	4.9
	917A	917A	917	SS, CL A, TY 2	12	120.5	0.51%	23.4
	917	917	918	SS, CL A, TY 2	12	9.5	0.53%	2
	918	918	919	SS, CL A, TY 2	24	31.8	0.63%	9.3
	919	919	921	SS, CL A, TY 2	24	27	0.56%	11.1
	920	920	921	SS, CL A, TY 2	12	14	0.71%	3.6
	921	921	925	SS, CL A, TY 2	24	40.6	0.74%	15.5
	922A	922A	922	SS, CL A, TY 2	12	110	0.53%	21.3
	922	922	925	SS, CL A, TY 2	12	13.1	0.76%	2.8
	923A	923A	923	SS, CL A, TY 2	12	120	0.52%	23.3
	923	923	925	SS, CL A, TY 2	12	10.4	0.96%	2.2
	925	925	926	6'x3' BOX CULVERT		37	0.24%	
	926A	926C	926A	SS, CL A, TY 3	12	11.4	20.70%	11.2
	926	926	927	SS, CL A, TY 2	48	197	0.25%	230.1
DU-27	927	927	949	SS, CL A, TY 2	48	8	0.12%	11.7
	928	928	929	SS, CL A, TY 2	12	33.3	0.81%	7.9
	929	929	930	SS, CL A, TY 2	12	23	1.09%	7.4
	930	930	931	SS, CL A, TY 2	12	31.8	0.79%	10.8
	931	931	932	SS, CL A, TY 2	12	3.8	1.32%	1.4
	932	932	935	SS, CL A, TY 2	12	112	3.00%	113.9
	933	933	934	SS, CL A, TY 2	12	95	0.54%	20.4
	934	934	935	SS, CL A, TY 2	12	3.8	1.32%	1.5
	935	935	940	SS, CL A, TY 2	12	113	3.00%	143.9
	936	936	937	SS, CL A, TY 2	12	33.3	0.84%	7.9
	937	937	938	SS, CL A, TY 2	12	23	1.30%	7.4
	938	938	939	SS, CL A, TY 2	12	31.8	0.94%	10.8
	939	939	940	SS, CL A, TY 2	12	3.8	1.32%	1.4
	940	940	943	SS, CL A, TY 2	30	107.5	0.34%	163.2
	941	941	942	SS, CL A, TY 2	12	95	0.75%	20.4
	942	942	943	SS, CL A, TY 2	12	2.3	1.30%	0.8
	943	943	948	SS, CL A, TY 2	30	109.5	0.30%	126.7
	944	944	945	SS, CL A, TY 2	12	33.3	1.00%	8.6
	945	945	946	SS, CL A, TY 2	12	23	1.00%	7.8
	946	946	947	SS, CL A, TY 2	12	31.8	1.00%	10.8
	947	947	948	SS, CL A, TY 2	15	2.2	1.00%	0.8
	948	948	949	SS, CL A, TY 2	24	7.9	0.76%	7.6

* INDICATES STRUCTURE SHALL BE INITIALLY INSTALLED USING A TYPE I FRAME AND CLOSED LID. ULTIMATELY DURING STAGED CONSTRUCTION THE FINAL FRAME AND GRATE WILL BE INSTALLED AND PAID FOR SEPARATLEY (REFER TO SUGGESTED SEQUENCE OF DRAINAGE INSTALLATION SHEETS AND STORM SEWER DRAINAGE DETAILS)

URS
100 S. WACKER DR.
SUITE 500
CHICAGO IL 60606
TEL (312)-939-1000
FAX (312)-939-4198

STRUCTURE SCHEDULE

Drawing	STR. NO.	STA.	OFFSET	STRUCTURE	COVER	FINAL RIM ELEV. CONTRACT 60F05	N	E	S	W
DU-28	932A	302+91.0	57.5' RT	MH TA 4	T1F CL	689.43			683.55(S) 12"	683.75(NW) 12"
	932B	302+99.0	50.2' RT	CB TA 4	T24 F&G	689.33		683.81(SE) 12"		684.01(W) 12"
	932C	302+99.0	45.8' LT	IN TA 2	T24 F&G	689.33		684.96(E) 12"		
	800	307+22.0	45.0' LT	IN TA 2	T24 F&G	687.83		683.46(E) 12"		
	803	307+22.0	51.0' RT	CB TA 4	T24 F&G	687.83		682.26(SE) 12"		682.46(W) 12"
	804	307+17.0	56.8' RT	MH TA 4	T1F CL	688.34			682.02(S) 12"	682.22(NW) 12"
*	805	306+22.0	17.0' RT	CB TA 4	T23 F&G	689.33		683.26(E) 12"		683.46(W) 12"
	805A	306+22.0	11.0' LT	IN TB 3	T23 F&G	689.33		683.69(E) 12"		683.89(W) 12"
	805B	306+22.0	45.0' LT	IN TA 2	T24 F&G	688.59		684.22(E) 12"		
	806	306+22.0	51.0' RT	CB TA 4	T24 F&G	688.59		682.74(NE) 12"	682.91(S) 12"	682.94(W) 12"
	806A	305+17.0	51.0' RT	CB TA 4	T24 F&G	689.44	683.92(N) 12"			684.12(W) 12"
	806B	305+17.0	45.0' LT	IN TA 2	T24 F&G	689.44		685.07(E) 12"		
	808	306+25.0	56.8' RT	MH TA 6D/R-PLT	2-T1F CL	689.03	680.80(N) 12"		680.60(S) 12"	682.73(SW) 12"
	809	306+10.0	56.8' RT	MH TA 4	T1F CL	688.89	680.45(N) 12"	672.23(E) 12"		
	810	306+10.0	68.0' RT	12" FES		672.53				672.06(W) 12"
	20A	306+04.0	96.8' LT	WALL OPENING				672.42(E) 12"		
	20	305+50.0	80.0' LT	CB TA 4	TY8 GR	680.80	675.58(N) 12"			
	21	306+04.0	78.1' LT	MH TA 4	T1F CL	680.70	675.07(N) 12"	672.38(E) 12"	675.07(S) 12"	672.38(W) 12"
	22	307+90.0	74.6' LT	CB TA 4	TY8 GR	679.90			676.89(S) 12"	
	23	306+03.8	66.5' RT	24" FES						672.06(W) 12"
DU-29	700	308+13.0	45.0' LT	IN TA 2	T24 F&G	687.61	683.24(N) 12"			
	701	308+25.0	45.0' LT	IN TB 3	T24 F&G	687.61		682.22(E) 12"	683.14(S) 12"	
	702	308+25.0	11.0' LT	CB TA 4	T23 F&G	688.35		681.78(E) 12"		681.88(W) 12"
	703	308+25.0	17.0' RT	CB TA 4	T23 F&G	688.35		681.47(E) 12"		681.57(W) 12"
*	704	308+13.0	51.0' RT	IN TA 2	T24 F&G	687.61	683.24(N) 12"			
	705	308+25.0	51.0' RT	CB TA 4	T24 F&G	687.61	680.97(NE) 12"		683.14(S) 12"	681.17(W) 12"
	706	308+30.0	56.8' RT	MH TA 4	T1F CL	688.07	679.29(N) 12"		680.92(SW) 12"	
	707	309+25.0	56.8' RT	MH TA 4	T1F CL	688.40	672.12(NE) 12"		678.29(S) 12"	
	708	309+32.0	68.4' RT	12" FES		671.92				671.92(SW) 12"
	19A	310+00.0	88.1' LT	WALL OPENING				674.48(E) 24"		
	19	309+40.6	67.4' RT	24" FES						671.92(W) 24"
	614	312+98.0	45.0' LT	CB TC 2	T24 F&G	693.38		684.64(E) 12"		
	615	312+98.0	51.0' RT	CB TC 2	T24 F&G	693.38				683.80(W) 12"
	616	312+98.0	45.0' RT	MH TA 5	T1F CL	693.56	683.76(N) 24"	683.76(E) 12"	681.76(S) 24"	683.76(W) 12"
	617	311+36.0	17.0' RT	CB TA 4	T23 F&G	691.18		680.11(E) 12"		683.48(W) 12"
*	617A	311+36.0	11.0' LT	IN TB 3	T23 F&G	691.18		683.72(E) 12"		685.72(W) 12"
	617B	311+36.0	45.0' LT	IN TA 2	T24 F&G	690.44		686.07(E) 12"		
	618	311+36.0	51.0' RT	CB TC 2	T24 F&G	690.44				679.90(W) 12"
	619	311+36.0	45.0' RT	MH TA 5	T1F CL	690.59	679.26(N) 24"	679.86(E) 12"	677.86(S) 24"	679.86(W) 12"
	619A	309+76.0	56.1' RT	MH TA 6	T1F CL	688.85	676.31(N) 24"		676.11(S) 24"	679.89(SW) 12"
	619B	309+74.0	51.0' RT	CB TA 4	T24 F&G	688.31		679.90(NE) 12"		683.00(W) 12"
	619C	309+74.0	45.0 LT	IN TA 2	T24 F&G	688.31		683.94(E) 12"		
	620	309+60.0	55.8' RT	MH TA 5D/R-PLT	T1F CL	688.68	676.00(N) 24"		675.00(S) 24"	
	621	309+51.0	56.2' RT	MH TA 5	T1F CL	688.60	674.96(N) 24"	672.17(SE) 24"		
	622	309+46.5	68.3' RT	24" FES						671.92(NW) 24"
DU-30	604	317+84.0	45.0' LT	CB TA 4	T24 F&G	702.20		695.79(E) 12"	695.99(SW) 12"	
	604A	317+50.0	56.2' LT	CB TC 2	TY8 GR	700.66	696.29(NE) 12"			
	604B	319+41.0	58.8' RT	MH TA 4	T1F CL	705.52	698.48(N) 12"		695.48(S) 18"	699.51(NW) 12"
	604C	319+46.0	51.0' RT	CB TA 4	T24 F&G	705.13		699.56(SE) 12"		699.76(W) 12"
	604D	319+46.0	45.0' LT	IN TA 2	T24 F&G	705.13		700.76(E) 12"		
	605	317+84.0	' RT	CB TA 4	T23 F&G	702.94		695.19(E) 12"		695.39(W) 12"
	606	317+84.0	17.0' RT	CB TA 4	T23 F&G	702.94		694.84(E) 12"		695.04(W) 12"
*	607	317+84.0	51.0' RT	CB TA 4	T24 F&G	702.20		694.34(SE) 12"		694.54(W) 12"
	608	317+83.0	58.8' RT	MH TA 4	T1F CL	702.54	693.00(N) 18"		692.78(S) 18"	694.31(NW) 12"
	608A	316+17.0	60.7' RT	MH TA 4	T1F CL	699.72	690.50(N) 12"		690.30(S) 18"	693.51(W) 12"
	608B	316+17.0	51.0' RT	CB TA 4	T24 F&G	699.17		693.56(E) 12"		693.76(W) 12"
	608C	316+15.0	45.0' LT	IN TA 2	T24 F&G	699.13		694.76(E) 12"		
	609	314+60.0	45.0' LT	IN TA 2	T24 F&G	696.32		691.95(E) 12"		
	610	314+60.0	11.0' LT	IN TB 3	T23 F&G	697.06		691.40(E) 12"		691.60(W) 12"
	611	314+60.0	6.0' RT	CB TA 4	T23 F&G	697.06		691.08(E) 12"		691.28(W) 12"
*	612	314+60.0	51.0' RT	CB TA 4	T24 F&G	696.32		690.48(E) 12"		690.68(W) 12"
	613	314+60.0	59.5' RT	MH TA 5	T1F CL	696.70	687.80(N) 18"		687.00(S) 24"	690.45(W) 12"

PIPE SCHEDULE

SHEET	PIPE NO.	STR. NO. FROM	STR. NO. TO	DESCRIPTION	IN DIA.	FT LEN	SLOPE	CU YD TBF
DU-28	932C	932C	932B	SS, CL A, TY 2	12	95	1.00%	22.4
	932B	932B	932A	SS, CL A, TY 2	12	6.2	0.97%	1.9
	932A	932A	932	SS, CL A, TY 2	12	96.5	0.98%	64.6
	801	800	803	SS, CL A, TY 2	12	95	1.05%	22.4
	803	803	804	SS, CL A, TY 2	12	2.9	1.38%	1
	804	804	808	SS, CL A, TY 2	18	87	1.40%	91.1
	805B	805B	805A	SS, CL A, TY 2	12	33.3	1.00%	7.9
	805A	805A	805	SS, CL A, TY 2	12	23	1.00%	7.4
	805	805	806	SS, CL A, TY 2	12	31.8	1.00%	10.8
	806B	806B	806A	SS, CL A, TY 2	12	95	1.00%	22.4
	806A	806A	806	SS, CL A, TY 2	12	101	1.00%	30.2
	806	806	808	SS, CL A, TY 2	12	0.7	1.43%	0.3
	808	808	809	SS, CL A, TY 2	12	10	1.50%	11.8
	809	809	810	SS, CL A, TY 4	12	9	1.89%	8.6
	13	20A	21	PCUL CL A TY 2	24	16.7	0.24%	13.7
	14	21	23	PCUL CL A TY 4	24	142.6	0.22%	277.2
	15	20	21	PCUL CL A TY 2	12	50	1.02%	
	16	22	21	PCUL CL A TY 2	12	182	1.00%	
DU-29	700	700	701	SS, CL A, TY 2	12	9.5	1.05%	1.8
	701	701	702	SS, CL A, TY 2	12	32.3	1.05%	11
	702	702	703	SS, CL A, TY 2	12	22.5	0.93%	14.9
	703	703	705	SS, CL A, TY 2	12	31.8	0.94%	21.1
	704	704	705	SS, CL A, TY 2	12	9	1.11%	1.7
	705	705	706	SS, CL A, TY 2	12	2.9	1.72%	2
	706	706	707	SS, CL A, TY 2	12	91	1.10%	121.8
	707	707	708	SS, CL A, TY 4	12	11.5	1.74%	10.2
	12	19A	19	PCUL CL A TY 3	24	166.5	1.54%	391.4
	613	613	616	SS, CL A, TY 2	24	157.6	2.06%	226.5
	614	614	616	SS, CL A, TY 2	12	87.5	1.01%	94.6
	615	615	616	SS, CL A, TY 2	12	3.5	1.14%	4
	616	616	619	SS, CL A, TY 2	24	157	1.59%	260.5
	617B	617B	617A	SS, CL A, TY 2	12	33.3	1.05%	7.9
	617A	617A	617	SS, CL A, TY 2	12	23	1.04%	18.2
	617	617	619	SS, CL A, TY 2	12	24.3	1.03%	32.5
	618	618	619	SS, CL A, TY 2	12	3.5	1.14%	4.6
	619	619	619A	SS, CL A, TY 3	24	154.9	1.00%	317.5
	619B	619C	619B	SS, CL A, TY 2	12	94	1.00%	22.2
	619A	619B	619A	SS, CL A, TY 2	12	0.6	1.00%	0.6
	620A	619A	620	SS, CL A, TY 3	24	10.5	1.00%	23
	620	620	621	SS, CL A, TY 3	24	4	1.00%	9.6
	621	621	622	SS, CL A, TY 3	24	12	2.08%	31.6
DU-30	604C	604D	604C	SS, CL A, TY 2	12	95	1.05%	22.4
	604B	604C	604B	SS, CL A, TY 2	12	4.4	1.14%	1.4
	603A	604B	608	SS, CL A, TY 2	18	154	1.61%	228.6
	604A	604A	604	SS, CL A, TY 2	12	32.5	0.92%	9
	604	604	605	SS, CL A, TY 2	12	42.8	0.93%	29.8
	605	605	606	SS, CL A, TY 2	12	11.5	1.30%	9.8
	606	606	607	SS, CL A, TY 2	12	31.8	0.94%	27.2
	607	607	608	SS, CL A, TY 2	12	2.9	1.03%	2.6
	608	608	608A	SS, CL A, TY 2	18	162	1.41%	228.8
	608B	608C	608B	SS, CL A, TY 2	12	95	1.05%	22.4
	608A	608B	608A	SS, CL A, TY 2	12	4.7	1.06%	1.6
	609A	608A	613	SS, CL A, TY 2	18	152.5	1.64%	209.7
	609	609	610	SS, CL A, TY 2	12	33.3	1.05%	7.9
	610	610	611	SS, CL A, TY 2	12	12	1.00%	3.8
	611	611	612	SS, CL A, TY 2	12	42.8	0.93%	13.7
	612	612	613	SS, CL A, TY 2	12	3	1.00%	1.1

* INDICATES STRUCTURE SHALL BE INITIALLY INSTALLED USING A TYPE I FRAME AND CLOSED LID. ULTIMATELY DURING STAGED CONSTRUCTION THE FINAL FRAME AND GRATE WILL BE INSTALLED AND PAID FOR SEPARATLEY (REFER TO SUGGESTED SEQUENCE OF DRAINAGE INSTALLATION SHEETS AND STORM SEWER DRAINAGE DETAILS)

URS
100 S. WACKER DR.
SUITE 500
CHICAGO IL 60606
TEL (312)-939-1000
FAX (312)-939-4198

FILE NAME = D160M62-SHT-Drain Schedules.dgn	USER NAME = Frank.Stallone	DESIGNED -	REVISED -
		DRAWN -	REVISED -
	PLOT SCALE = 40.000000 ' / in.	CHECKED -	REVISED -
SHT_PLAN	PLOT DATE = 3/14/2013	DATE - 03/13/13	REVISED -

STATE OF ILLINOIS
DEPARTMENT OF TRANSPORTATION

DRAINAGE SCHEDULE

SCALE: | SHEET 02 OF 07 SHEETS | STA. TO STA.

F.A.P RTE.	SECTION	COUNTY	TOTAL SHEETS	SHEET NO.
330	103R-5	COOK	778	205
	DS-02	CONTRACT NO. 60M62		
		ILLINOIS FED. AID PROJECT		

STRUCTURE SCHEDULE

Drawing	STR. NO.	STA.	OFFSET	STRUCTURE	COVER	FINAL RIM ELEV. CONTRACT 60F05	N	E	S	W
DU-31	600	321+00.0	53.4' LT	CB TC 2	TY8 GR	707.20	702.83(NE) 12"			
	601	321+08.0	45.0' LT	CB TA 4	T24 F&G	707.77		702.53(E) 12"		702.73(SW) 12"
	602	321+08.0	51.0' RT	CB TA 4	T24 F&G	707.77		701.43(SE) 12"		701.63(W) 12"
	603	321+03.0	58.6' RT	MH TA 4	T1F CL	707.84			701.18(S) 12"	701.38(NW) 12"
	18A	323+31.0	71.3' LT	WALL OPENING				705.45(E) 24"		
	18	323+31.0	53.0' LT	CB TA 4	TY8 GR	707.85		703.63(E) 24"		704.39(W) 24"
	18B	323+31.0	61.6' RT	WALL OPENING						703.06(W) 24"
	500	323+51.0	45.0' LT	IN TA 2	T24 F&G	707.83	703.33(N) 12"			
	501	323+51.0	51.6' RT	CB TA 4	T24 F&G	707.83		703.33(NE) 12"		
	502	323+56.0	59.5' RT	MH TA 4	T1F CL	708.10	702.11(N) 15"			703.29(SW) 12"
	502A	324+22.0	45.0' LT	CB TA 4	T24 F&G	707.58	702.46(N) 15"	703.18(E) 12"	702.66(S) 12"	
	502B	324+22.0	11.0' LT	IN TB 3	T23 F&G	708.32		703.70(E) 12"		703.50(W) 12"
	502C	324+22.0	12.6' RT	IN TA 2	T23 F&G	708.39				703.89(W) 12"
*	502D	324+22.0	51.6' RT	CB TA 4	T24 F&G	707.46		702.96(E) 12"		
	502E	324+23.0	63.7' RT	MH TA 4	T1F CL	707.95	701.58(N) 15"		701.78(S) 15"	702.89(W) 12"
	503	324+93.0	45.0' LT	CB TA 4	T24 F&G	707.33		701.59(E) 15"	701.79(S) 15"	
	504	324+93.0	60.0' RT	CB TA 4	T24 F&G	707.10		700.46(E) 15"		700.56(W) 15"
	505	324+94.0	67.9' RT	MH TA 4	T1F CL	707.52	701.04(N) 15"		701.24(S) 15"	700.43(W) 15"
	506A	325+64.0	45.0' LT	IN TA 2	T24 F&G	707.08		702.58(E) 12"		
	506B	325+64.0	11.0' LT	IN TB 3	T23 F&G	707.82		702.15(E) 12"		702.25(W) 12"
	506C	325+64.0	6.0' RT	CB TA 4	T23 F&G	707.99		701.93(E) 12"		702.03(W) 12"
*	506D	325+64.0	63.0' RT	CB TA 4	T24 F&G	706.78		701.28(E) 12"		701.38(W) 12"
	506E	325+65.0	70.0' RT	MH TA 4	T1F CL	707.10	700.51(N) 18"		700.71(S) 15"	701.26(W) 12"
DU-32	507A	326+35.0	45.0' LT	IN TA 2	T24 F&G	706.83		702.33(E) 12"		
	507B	326+35.0	63.0' RT	CB TA 4	T24 F&G	706.53		701.16(E) 12"		701.26(W) 12"
	507C	326+36.0	70.0' RT	MH TA 4	T1F CL	706.81	700.07(N) 18"		700.17(S) 18"	701.14(SW) 12"
	508A	327+00.0	52.9' LT	CB TC 2	TY8 GR	706.50		701.21(E) 12"		
	508B	327+06.0	45.0' LT	CB TA 4	T24 F&G	706.58	701.15(N) 12"	701.05(E) 12"	701.15	701.15(W) 12"
	508C	327+20.0	11.0' LT	CB TA 4	T23 F&G	707.27		700.61(E) 12"		700.71(W) 12"
	508D	327+20.0	6.0' RT	CB TA 4	T23 F&G	707.44		700.39(E) 12"		700.49(W) 12"
*	508E	327+20.0	70.0' RT	MH TA 4	T1F CL	706.43	699.57(N) 18"		699.67(S) 18"	699.78(W) 12"
	509	327+77.0	45.0' LT	IN TA 2	T24 F&G	706.33			701.83(S) 12"	
	510A	328+48.0	45.0' LT	IN TA 2	T24 F&G	706.08	701.58(N) 12"			
	510B	328+58.0	68.0' RT	CB TA 4	T24 F&G	705.60	701.10(N) 12"			
	510C	328+76.0	62.0' RT	MH TA 4	T1F CL	706.35	698.71(N) 24"	700.95(SE) 12"	698.81(S) 18"	
	511A	329+19.0	45.5' LT	IN TB 3	T24 F&G	705.84	701.34(N) 12"	700.80(E) 12"	700.90(S) 12"	
	511B	329+19.0	51.0' RT	CB TA 4	T24 F&G	705.84		699.75(E) 15"		699.85(W) 12"
	511C	329+21.0	58.6' RT	MH TA 5	T1F CL	706.30	698.21(N) 24"	699.64(SE) 12"	698.51(S) 24"	699.72(W) 15"
	512A	329+89.0	45.0' LT	CB TA 4	T24 F&G	705.69	700.93(N) 15"	700.83(E) 18"		
	512B	329+89.0	11.0' RT	CB TA 4	T23 F&G	706.43		700.19(E) 18"		700.29(W) 18"
*	512C	329+89.0	17.0' RT	CB TA 4	T23 F&G	706.43		700.09(E) 18"		700.16(W) 18"
*	512D	329+89.0	53.0' RT	CB TA 4	T24 F&G	705.69	701.02(N) 12"	699.65(E) 18"		699.75(W) 18"
	512E	329+91.0	58.6' RT	MH TA 5	T1F CL	706.19	693.69(N) 36"		697.69(S) 24"	699.63(W) 18"
	513A	330+10.0	55.0' LT	CB TC 2	TY8 GR	705.00		701.26(E) 12"		
	513B	330+10.0	45.5' LT	CB TA 4	T24 F&G	705.70			701.10(S) 12"	701.20(W) 12"
	514	330+10.0	51.0' RT	IN TA 2	T24 F&G	705.70			701.20(S) 12"	
	515A	331+40.0	45.5' LT	IN TA 2	T24 F&G	706.39		701.89(E) 12"		
	515B	331+40.0	51.0' RT	CB TA 4	T24 F&G	706.39		700.84(E) 12"		700.94(W) 12"
	515C	331+41.0	57.7' RT	MH TA 5	T1F CL	706.95	692.81(N) 36"		693.31(S) 36"	700.82(W) 12"

PIPE SCHEDULE

SHEET	PIPE NO.	STR. NO. FROM	STR. NO. TO	DESCRIPTION	IN DIA.	FT LEN	SLOPE	CU YD TBF
DU-31	600	600	601	SS, CL A, TY 2	12	7.9	1.27%	
	601	601	602	SS, WMR	12	94	0.96%	30.1
	602	602	603	SS, CL A, TY 2	12	4.3	1.16%	3.5
	603	603	604B	SS, WMR	12	158	1.71%	145.5
	10	18A	18	PCUL CL A TY 1	24	16.3	6.50%	2
	11	18	18B	PCUL CL A TY 1	24	112.6	0.51%	16.4
	500	500	502A	SS, CL A, TY 2	12	68	0.99%	14.6
	501	501	502	SS, CL A, TY 2	12	4.5	1.00%	1.6
	502	502	502E	SS, CL A, TY 2	15	63.1	0.53%	51.4
	502A	502A	503	SS, WMR	15	67	1.00%	18.9
	502B	502B	502A	SS, CL A, TY 2	12	32.3	0.99%	6.3
	502C	502C	502B	SS, CL A, TY 2	12	19.6	0.97%	3.8
	502D	502D	502E	SS, CL A, TY 2	12	7.1	1.00%	1.5
	502E	502E	505	SS, WMR	15	67.1	0.50%	56.9
	503	503	504	SS, WMR	15	103	1.00%	38.6
	504	504	505	SS, CL A, TY 2	15	3	1.00%	2.9
	505	505	506E	SS, CL A, TY 2	15	67	0.50%	59.1
	506A	506A	506B	SS, CL A, TY 2	12	33.3	1.00%	8.6
	506B	506B	506C	SS, CL A, TY 2	12	12	1.00%	3.8
	506C	506C	506D	SS, CL A, TY 2	12	54.8	1.00%	17.5
	506D	506D	506E	SS, CL A, TY 2	12	2.1	1.00%	1.5
DU-32	506	506E	507C	SS, CL A, TY 2	18	67	0.50%	60.4
	507A	507A	507B	SS, CL A, TY 2	12	107	1.00%	25.3
	507B	507B	507C	SS, CL A, TY 2	12	2.1	1.00%	1.5
	507	507C	508E	SS, CL A, TY 2	18	80	0.50%	71.3
	508A	508A	508B	SS, CL A, TY 2	12	6.1	1.00%	1.7
	508B	508B	508C	SS, CL A, TY 2	12	34.4	1.00%	12.5
	508C	508C	508D	SS, CL A, TY 2	12	11.5	1.00%	7.6
	508D	508D	508E	SS, CL A, TY 2	12	60.8	1.00%	42.3
	508	508E	510C	SS, CL A, TY 2	18	152.2	0.50%	121
	509	509	508B	SS, CL A, TY 2	12	68	1.00%	16
	510A	510A	511A	SS, CL A, TY 2	12	68.5	1.00%	14.7
	510B	510B	510C	SS, CL A, TY 2	12	15.3	1.00%	3.6
	510	510C	511C	SS, CL A, TY 2	24	40.6	0.50%	47.5
	511A	511A	511B	SS, CL A, TY 2	12	95	1.00%	28.4
	511B	511B	511C	SS, CL A, TY 2	15	2.4	1.00%	1
	511	511C	512E	SS, CL A, TY 2	24	65	0.80%	84
	513A	513A	513B	SS, CL A, TY 2	12	5.5	1.00%	0.8
	513B	513B	512A	SS, CL A, TY 2	12	17	1.00%	3.7
	512A	512A	512B	SS, CL A, TY 2	18	53.8	1.00%	16.5
	512B	512B	512C	SS, CL A, TY 2	18	0.5	6.40%	0.2
	512C	512C	512D	SS, CL A, TY 2	18	33.8	1.00%	12.9
	512D	512D	512E	SS, CL A, TY 2	18	0.5	4.40%	0.4
	514	514	512D	SS, CL A, TY 2	12	18.1	1.00%	3.5
	512	512E	515C	SS, CL A, TY 3	36	145	0.26%	369.1
	515A	515A	515B	SS, CL A, TY 2	12	95.5	1.00%	22.5
	515B	515B	515C	SS, CL A, TY 2	12	1.3	1.00%	1
	515	515C	521	SS, CL A, TY 3	36	123.5	0.26%	367.5

* INDICATES STRUCTURE SHALL BE INITIALLY INSTALLED USING A TYPE I FRAME AND CLOSED LID. ULTIMATELY DURING STAGED CONSTRUCTION THE FINAL FRAME AND GRATE WILL BE INSTALLED AND PAID FOR SEPARATLEY (REFER TO SUGGESTED SEQUENCE OF DRAINAGE INSTALLATION SHEETS AND STORM SEWER DRAINAGE DETAILS)

URS
100 S. WACKER DR.
SUITE 500
CHICAGO IL 60606
TEL (312)-939-1000
FAX (312)-939-4498

STRUCTURE SCHEDULE

Drawing	STR. NO.	STA.	OFFSET	STRUCTURE	COVER	FINAL RIM ELEV. CONTRACT 60F05	N	E	S	W
DU-33	518A	332+60.0	60.1' LT	CB TC 2	TY8 GR	706.09		704.20(E) 12"		
	518B	332+90.0	45.0' LT	CB TA 4	T24 F&G	708.40		703.80(E) 12"		703.90(W) 12"
	518C	332+90.0	5.5' LT	CB TA 4	T23 F&G	709.22		703.33(E) 12"		703.43(W) 12"
*	518D	332+90.0	17.0' RT	CB TA 4	T23 F&G	709.14		703.06(SE) 12"		703.16(W) 12"
*	519	332+70.0	45.0' RT	MH TA 6	T1F CL	708.24	692.67(N) 18"	692.57(E) 18"	703.74(NE) 12"	702.76(NW) 12"
	520	332+90.0	51.0' RT	CB TA 4	T24 F&G	708.40			703.90(SW) 12"	
	521	332+70.0	58.6' RT	MH TA 6	T1F CL	708.98	692.49(W) 18"	692.39(NE) 36"	692.49(S) 36"	
	522	332+74.0	64.9' RT	MH TA 6D/R-PLT	2-T1F CL	709.13	692.31(N) 36"			692.37(SW) 36"
	523	332+90.0	63.7' RT	MH TA 6	T1F CL	709.14		692.16(E) 36"	692.26(S) 36"	
	524	332+90.0	76.0' RT	30" FES		692.22				692.11(W) 36"
	525A	334+40.0	45.0' LT	CB TC 2	T24 F&G	710.67		706.17(E) 12"		
	525B	334+40.0	45.0' RT	MH TA 4	T1F CL	710.82	699.32(N) 18"	706.13(E) 12"	694.32(S) 18"	705.29(W) 12"
	525C	334+40.0	51.0' RT	CB TC 2	T24 F&G	710.67				706.17(W) 12"
	526	334+86.0	76.4' LT	WALL OPENING				704.95(E) 12"		
	527A	335+90.0	45.0' LT	CB TA 4	T24 F&G	712.95	706.72(N) 12"	703.79(E) 12"		703.89(W) 12"
	527B	335+90.0	11.0' LT	CB TA 4	T23 F&G	713.69		703.37(E) 12"		703.47(W) 12"
	527C	335+90.0	17.0' RT	CB TA 4	T23 F&G	713.69		703.04(E) 12"		703.14(W) 12"
*	527D	335+90.0	45.0' RT	MH TA 4	T1F CL	713.10	703.56(N) 18"	708.42(E) 12"	701.56(S) 18"	702.80(W) 12"
	527E	335+90.0	51.0' RT	CB TA 4	T24 F&G	712.95				708.45(W) 12"
	527F	336+05.0	60.0' LT	CB TA 4	TY8 GR	711.39			706.89(S) 12"	
	528A	337+40.0	45.0' LT	IN TA 2	T24 F&G	715.23		710.73(E) 12"		
	528B	337+40.0	51.0' RT	CB TA 4	T24 F&G	715.23		709.68(E) 12"		709.78(W) 12"
	529	337+39.0	58.6' RT	MH TA 4	T1F CL	715.61	708.81(N) 15"		705.81(S) 18"	709.65(NW) 12"
	15	334+70.3	58.3' LT	12" FES					708.17(S) 12"	
	16	334+32.7	58.3' LT	12" FES			707.95(N) 12"			
	17	332+96.0	77.9' LT	12" FES						EX INV (W)EX 12"
	8A	332+97.0	77.0' LT	WALL OPENING				699.17(E) 24"		
	8B	332+97.0	69.0' RT	WALL OPENING						695.06(W) 24"
DU-34	530	338+90.0	45.0' LT	IN TA 2	T24 F&G	717.51		713.01(E) 12"		
	531	338+90.0	11.0' LT	IN TB 3	T23 F&G	718.25		712.58(E) 12"		712.68(W) 12"
	532	338+90.0	17.0' RT	CB TA 4	T23 F&G	718.25		712.25(E) 12"		712.35(W) 12"
*	533	338+90.0	51.0' RT	CB TA 4	T24 F&G	717.51		711.83(E) 12"		711.93(W) 12"
	534	338+88.0	58.6' RT	MH TA 4	T1F CL	719.36	711.54(N) 12"		711.04(S) 15"	711.80(W) 12"
	535	340+40.0	45.0' LT	IN TA 2	T24 F&G	719.56		715.06(E) 12"		
	536	340+40.0	51.0' RT	CB TA 4	T24 F&G	719.56		714.03(E) 12"		714.13(W) 12"
	537	340+35.0	58.6' RT	MH TA 4	T1F CL	719.94			713.74(S) 12"	713.98(W) 12"
	400	343+25.0	56.0' LT	CB TC 2	TY8 GR	718.70		715.67(SE) 12"		
	401	343+22.0	45.0' LT	CB TA 4	T24 F&G	720.00	715.50(N) 12"			715.60(NW) 12"
	408	343+22.0	51.0' RT	IN TA 2	T24 F&G	720.00	715.50(N) 12"			
DU-35	402	344+50.0	67.5' LT	CB TC 2	TY8 GR	718.00		713.98(SE) 24"		
	403	344+36.0	45.0' LT	CB TA 4	T24 F&G	719.02		713.90(E) 24"	714.40(S) 12"	713.90(NW) 24"
	405	344+36.0	9.1' LT	CB TA 4	T23 F&G	719.79		713.77(E) 24"		713.78(W) 24"
	406	344+36.0	6.0' RT	CB TA 4	T23 F&G	719.93		713.74(E) 24"		713.74(W) 24"
*	410	344+36.0	51.0' RT	CB TA 4	T24 F&G	719.02		713.58(NE) 24"	714.39(S) 12"	713.59(W) 24"
	412	344+54.0	73.5' RT	MH TA 6D/R-PLT	2-T1F CL	718.50			713.50(SE) 24"	713.50(W) 24"
	200	345+50.0	45.0' LT	IN TA 2	T24 F&G	718.02	713.65(N) 12"			
	201A	346+64.0	51.0' RT	IN TA 2	T24 F&G	717.01				712.64(W) 12"
	201B	346+64.0	45.0' LT	CB TA 4	T24 F&G	717.01		711.64(E) 12"	712.55(S) 12"	711.44(NW) 12"
	202	346+69.0	51.0' LT	MH TA 4	T1F CL	717.30	710.94(N) 15"	711.14(SE) 12"		
	203	347+79.0	51.0' LT	MH TA 4	T1F CL	717.34	709.95(N) 15"	710.13(SE) 12"	710.15(S) 15"	
	203A	347+78.0	51.0' RT	IN TA 2	T24 F&G	716.00				711.63(W) 12"
	203B	347+78.0	17.0' RT	IN TB 3	T23 F&G	716.74		711.30(E) 12"		711.10(W) 12"
*	203C	347+78.0	0.3' LT	CB TA 4	T23 F&G	716.74		710.98(E) 12"		710.78(W) 12"
*	203D	347+78.0	45.0' LT	CB TA 4	T24 F&G	716.00		710.36(E) 12"		710.16(NW) 12"
	204	348+92.0	51.0' RT	IN TA 2	T24 F&G	715.00				710.63(W) 12"
	205	348+92.0	45.0' LT	CB TA 4	T24 F&G	715.00		709.68(E) 12"		709.48(NW) 12"
	206	348+93.0	51.0' LT	MH TA 4	T1F CL	715.58	708.92(N) 18"	709.45(SE) 12"	709.12(S) 15"	

PIPE SCHEDULE

SHEET	PIPE NO.	STR. NO. FROM	STR. NO. TO	DESCRIPTION	IN DIA.	FT LEN	SLOPE	CU YD TBF
DU-33	8	8A	8B	PCUL CL A TY 3	24	146	2.82%	230.3
	9	15	16	PCUL CL A TY 1	12	37.6	0.59%	3.3
	518A	518A	518B	SS, CL A, TY 2	12	30.1	1.00%	0.8
	518B	518B	518C	SS, CL A, TY 2	12	37.3	1.00%	9.6
	518C	518C	518D	SS, CL A, TY 2	12	17	1.00%	5.8
	518D	518D	519	SS, CL A, TY 2	12	30	1.00%	9.6
	519	519	521	SS, CL A, TY 3	18	7.6	1.00%	18.2
	520	520	519	SS, CL A, TY 2	12	16.2	1.00%	3.1
	521	521	522	SS, CL A, TY 3	36	2	1.00%	5.2
	522	522	523	SS, CL A, TY 3	36	10.5	0.50%	32.9
	523	523	524	SS, CL A, TY 3	36	9.3	0.50%	9.9
	525	525B	519	SS, CL A, TY 3	18	165	1.00%	395.1
	525A	525A	525B	SS, CL A, TY 2	12	88	1.00%	20.8
	525C	525C	525B	SS, CL A, TY 2	12	4	1.00%	0.8
	527	527D	525B	SS, CL A, TY 2	18	146	1.54%	227.4
	526	526	527A	SS, CL A, TY 2	12	106.4	1.00%	42.8
	527A	527A	527B	SS, CL A, TY 2	12	31.8	1.00%	36.4
	527B	527B	527C	SS, CL A, TY 2	12	22.5	1.00%	28.7
	527C	527C	527D	SS, CL A, TY 2	12	24.8	1.00%	31.6
	527E	527E	527D	SS, CL A, TY 2	12	3	1.00%	0.6
	527F	527F	527A	SS, CL A, TY 2	12	16.5	1.03%	4.6
	529	529	527D	SS, CL A, TY 2	18	145.6	1.54%	189.4
	528A	528A	528B	SS, CL A, TY 2	12	95	1.00%	22.4
	528B	528B	529	SS, CL A, TY 2	12	2.7	1.00%	2
DU-34	534	534	529	SS, CL A, TY 2	15	145	1.54%	152.8
	530	530	531	SS, CL A, TY 2	12	33.3	1.00%	8.6
	531	531	532	SS, CL A, TY 2	12	23	1.00%	7.4
	532	532	533	SS, CL A, TY 2	12	31.8	1.00%	10.2
	533	533	534	SS, CL A, TY 2	12	2.9	1.00%	2.6
	537	537	534	SS, CL A, TY 2	12	143	1.54%	131.7
	535	535	536	SS, CL A, TY 2	12	93	1.00%	21.9
	536	536	537	SS, CL A, TY 2	12	5.1	1.00%	3.7
	400	400	401	SS, CL A, TY 2	12	7.4	1.00%	1
	401	401	403	SS, CL A, TY 2	12	110	1.00%	21.3
	408	408	410	SS, CL A, TY 2	12	111	1.00%	21.5
DU-35	402	402	403	SS, CL A, TY 1	24	22.7	0.35%	4.2
	403	403	405	SS, CL A, TY 2	24	33.7	0.35%	9.9
	405	405	406	SS, CL A, TY 2	24	9.6	0.35%	3.7
	406	406	410	SS, CL A, TY 2	24	42.8	0.35%	13.8
	410	410	412	SS, CL A, TY 2	24	23	0.35%	7.5
	200	200	201B	SS, CL A, TY 2	12	111	0.99%	19.2
	201A	201A	201B	SS, CL A, TY 2	12	95	1.05%	22.4
	201B	201B	202	SS, CL A, TY 2	12	3.1	9.68%	1.1
	202	202	203	SS, CL A, TY 2	15	106	0.75%	
	203A	203A	203B	SS, CL A, TY 2	12	33.3	0.99%	7.9
	203B	203B	203C	SS, CL A, TY 2	12	12.3	0.98%	3.9
	203C	203C	203D	SS, CL A, TY 2	12	42.5	0.99%	13.6
	203D	203D	203	SS, CL A, TY 2	12	1.1	2.73%	0.7
	203	203	206	SS, CL A, TY 2	15	110	0.75%	
	204	204	205	SS, CL A, TY 2	12	95	1.00%	22.4
	205	205	206	SS, CL A, TY 2	12	1.1	2.73%	0.4
	206	206	207E	SS, CL A, TY 2	18	111	0.74%	

* INDICATES STRUCTURE SHALL BE INITIALLY INSTALLED USING A TYPE I FRAME AND CLOSED LID. ULTIMATELY DURING STAGED CONSTRUCTION THE FINAL FRAME AND GRATE WILL BE INSTALLED AND PAID FOR SEPARATLEY (REFER TO SUGGESTED SEQUENCE OF DRAINAGE INSTALLATION SHEETS AND STORM SEWER DRAINAGE DETAILS)

URS
100 S. WACKER DR.
SUITE 500
CHICAGO IL 60606
TEL (312)-939-1000
FAX (312)-939-4498

STRUCTURE SCHEDULE

Drawing	STR. NO.	STA.	OFFSET	STRUCTURE	COVER	FINAL RIM ELEV. CONTRACT 60F05	N	E	S	W
DU-36	207A	349+50.0	51.0' RT	IN TA 2	T24 F&G	714.49				710.12(W) 12"
	207B	350+07.0	2.1' RT	IN TB 3	T23 F&G	714.84		709.42(E) 12"		709.22(W) 12"
*	207C	350+07.0	11.0' LT	CB TA 4	T23 F&G	714.73		709.14(E) 12"		708.94(W) 12"
	207D	350+07.0	45.0' LT	CB TA 4	T24 F&G	713.99		708.62(E) 12"		708.62(NW) 12"
	207E	350+08.0	51.0' LT	MH TA 4	T1F CL	714.70	707.90(N) 18"	708.59(SE) 12"	708.10(S) 18"	
	208A	351+20.0	51.0' RT	IN TA 2	T24 F&G	712.99				708.62(W) 12"
	208B	351+20.0	45.0' LT	CB TA 4	T24 F&G	712.99		707.67(E) 12"		707.47(NW) 12"
	208C	351+21.0	51.0' LT	MH TA 4	T1F CL	713.79	706.88(N) 18"	707.46(SE) 12"	707.08(S) 18"	
	209A	352+34.0	51.0' RT	IN TA 2	T24 F&G	711.98				707.61(W) 12"
	209B	352+34.0	5.0' LT	IN TB 3	T23 F&G	712.72		707.06(E) 12"		706.86(W) 12"
*	210	352+34.0	45.0' LT	CB TA 4	T24 F&G	711.98		706.50(E) 12"		706.30(NW) 12"
	211	352+35.0	51.0' LT	MH TA 5	T1F CL	712.63	705.86(N) 24"	706.29(SE) 12"	706.06(S) 18"	
	212	353+48.0	51.0' RT	IN TA 2	T24 F&G	710.97				706.60(W) 12"
	213A	353+48.0	5.0' LT	IN TB 3	T23 F&G	711.71		706.05(E) 12"		705.85(W) 12"
*	213B	353+48.0	51.7' LT	CB TA 4	T24 F&G	710.74		705.42(E) 12"		705.22(SW) 12"
	214A	353+40.0	70.4' LT	MH TA 4	T1F CL	711.70		707.21(E) 15"	707.41(SW) 15"	
	214	353+43.0	56.4' LT	MH TA 6	T1F CL	711.40	704.41(N) 36"	705.21(NE) 12"	705.34(S) 24"	707.12(W) 15"
	215	17+70.0	65.0' RT	IN TA 2	T24 F&G	709.80				705.43(W) 12"
	217	17+20.0	57.0' RT	IN TA 2	T24 F&G	709.25		704.88(E) 12"		
	218	17+51.0	57.3' RT	CB TA 4	T24 F&G	708.78	704.40(N) 24"	705.26(E) 12"		704.60(W) 12"
	219	17+20.0	3.5 LT	IN TA 2	T23 F&G	711.79		707.42(E) 12"		
	220	17+51.0	4.5' LT	CB TA 4	T23 F&G	711.66	703.90(N) 24"		704.10(S) 24"	707.12(W) 12"
	221	17+20.0	40.8' LT	IN TA 2	T24 F&G	709.36		704.99(E) 12"		
	222	17+70.0	48.0' LT	IN TA 2	T24 F&G	709.16				704.79(W) 12"
	223	17+51.0	43.4' LT	CB TA 4	T24 F&G	709.07	703.52(N) 24"	704.63(E) 12"	703.72(S) 24"	704.71(W) 12"
	231	17+51.0	54.0' LT	MH TA 5	T1F CL	709.72		703.27(E) 24"	703.47(S) 24"	704.69(W) 18"
	232	355+03.0	53.0' LT	MH TA 6	T1F CL	709.37	702.77(N) 36"		703.85(S) 36"	702.97(W) 24"
	233A	355+45.0	45.0' LT	CB TC 2	T24 F&G	709.24				704.97(NW) 12"
	233	355+45.0	53.0' LT	MH TA 6	T1F CL	709.91	700.14(N) 36"	704.94(SE) 12"	702.64(S) 36"	
	270	353+62.0	72.0' RT	CB TC 2	TY8 GR	709.46	705.09(NW) 15"			
	271	353+85.0	62.5' RT	CB TA 4	T24 F&G	710.24	705.61(N) 18"		704.99(SE) 15"	
	272	355+25.0	51.3' RT	CB TC 2	T24 F&G	709.41		705.03(NE) 12"		
	273	355+29.0	61.1' RT	MH TA 5	T1F CL	710.03	704.91(N) 24"		704.91(S) 18"	704.97(SW) 12"
	13	352+81.7	64.6' RT	12" FES			710.13(N) 12"			
	14	353+13.3	69.5' RT	12" FES					709.94(N) 12"	

PIPE SCHEDULE

SHEET	PIPE NO.	STR. NO. FROM	STR. NO. TO	DESCRIPTION	IN DIA.	FT LEN	SLOPE	CU YD TBF
DU-36	207B	207A	207B	SS, CL A, TY 2	12	73.8	0.95%	17.4
	207C	207B	207C	SS, CL A, TY 2	12	8.1	0.99%	2.4
	207D	207C	207D	SS, CL A, TY 2	12	31.8	1.01%	9.5
	207E	207D	207E	SS, CL A, TY 2	12	1.1	2.73%	0.4
	207	207E	208C	SS, CL A, TY 2	18	109	0.75%	
	208A	208A	208B	SS, CL A, TY 2	12	95	1.00%	22.4
	208B	208B	208C	SS, CL A, TY 2	12	1.1	1.00%	0.4
	208	208C	211	SS, CL A, TY 2	18	109.5	0.75%	
	209A	209A	209B	SS, CL A, TY 2	12	55.3	0.99%	13.1
	209B	209B	210	SS, CL A, TY 2	12	36.8	0.98%	11.8
	210	210	211	SS, CL A, TY 2	12	0.6	1.00%	0.2
	211	211	214	SS, WMR	24	102.6	0.50%	
	7	13	14	PCUL CL A TY 1	12	32	0.59%	31.1
	212	212	213A	SS, CL A, TY 2	12	55.3	0.99%	13.1
	213A	213A	213B	SS, CL A, TY 2	12	43.5	0.99%	13
	213B	213B	214	SS, CL A, TY 2	12	1.2	1.00%	0.4
	214A	214A	214	SS, WMR	15	9.3	0.97%	1.6
	214	214	232	SS, CL A, TY 2	36	154	0.36%	80.1
	215	215	218	SS, CL A, TY 2	12	17.5	0.97%	2.3
	217	217	218	SS, CL A, TY 2	12	28	1.00%	4.8
	218	218	220	SS, CL A, TY 2	24	59.6	0.50%	21
	219	219	220	SS, CL A, TY 2	12	28	1.07%	5.4
	220	220	223	SS, CL A, TY 2	24	35.2	0.51%	22.6
	221	221	223	SS, CL A, TY 2	12	28.1	1.00%	4.9
	222	222	223	SS, WMR	12	16.5	0.97%	2.9
	223	223	231	SS, WMR	24	5.1	0.98%	1.8
	231	231	232	SS, WMR	24	40	0.75%	25.7
	232	232	233	SS, CL A, TY 2	36	36	0.36%	24
	233A	233A	233	SS, CL A, TY 2	12	3	1.00%	0.6
	233	233	237	SS, CL A, TY 2	36	94.1	0.36%	
	270	270	271	SS, CL A, TY 2	15	21.5	0.47%	4.6
	271	271	273	SS, CL A, TY 2	18	139.5	0.50%	32.2
	272	272	273	SS, CL A, TY 2	12	6.2	0.97%	1.3

* INDICATES STRUCTURE SHALL BE INITIALLY INSTALLED USING A TYPE I FRAME AND CLOSED LID. ULTIMATELY DURING STAGED CONSTRUCTION THE FINAL FRAME AND GRATE WILL BE INSTALLED AND PAID FOR SEPARATLEY (REFER TO SUGGESTED SEQUENCE OF DRAINAGE INSTALLATION SHEETS AND STORM SEWER DRAINAGE DETAILS)

URS
100 S. WACKER DR.
SUITE 500
CHICAGO, IL 60606
TEL (312)-939-1000
FAX (312)-939-9498

STRUCTURE SCHEDULE

Drawing	STR. NO.	STA.	OFFSET	STRUCTURE	COVER	FINAL RIM ELEV. CONTRACT 60F05	N	E	S	W
DU-37	234	356+40.0	51.0' RT	IN TA 2	T24 F&G	708.40				704.03(W) 12"
	235	356+40.0	11.0' RT	IN TB 3	T23 F&G	709.14		703.65(E) 12"		703.45(W) 12"
*	236	356+40.0	45.0' LT	CB TA 4	T24 F&G	708.40		702.90(E) 12"		702.70(NW) 12"
	237	356+45.0	56.8' LT	MH TA 6	TY8 GR	707.23	699.60(N) 36"	702.63(SE) 12"	699.80(S) 36"	
	238A	357+57.0	51.0' RT	IN TA 2	T24 F&G	707.37				703.00(W) 12"
	238B	357+57.0	45.0' LT	CB TA 4	T24 F&G	707.37		702.05(E) 12"		701.85(W) 12"
	238C	357+60.0	56.8' LT	MH TA 6	T1F CL	705.90	698.21(N) 36"	701.78(E) 12"	699.21(S) 36"	
	239A	358+73.0	51.0' RT	IN TA 2	T24 F&G	706.42				702.05(W) 12"
	239B	358+73.0	17.0' RT	IN TB 3	T23 F&G	707.32		701.72(E) 12"		701.52(W) 12"
*	240	358+73.0	0.4' RT	CB TA 4	T23 F&G	707.16		701.41(E) 12"		701.21(W) 12"
*	241	358+73.0	45.0' LT	CB TA 4	T24 F&G	706.56		700.78(E) 12"		700.58(W) 12"
	242	358+76.0	56.8' LT	MH TA 6	T1F CL	705.22	697.61(N) 36"	700.51(E) 12"	697.81(S) 36"	
	243	359+73.0	51.0' RT	IN TA 2	T24 F&G	706.07	701.70(N) 12"			
	244	360+03.0	51.0' RT	IN TA 2	T24 F&G	706.08			701.71(S) 12"	
	245	359+88.0	51.0' RT	CB TA 4	T24 F&G	706.07	701.59(N) 12"		701.58(S) 12"	701.38(W) 15"
	246	359+88.0	17.0' RT	CB TA 4	T23 F&G	706.81		701.06(E) 15"		700.96(W) 15"
*	247	359+88.0	8.0' LT	CB TA 4	T23 F&G	706.81		700.76(E) 15"		700.56(W) 15"
*	248	359+73.0	45.0' LT	IN TA 2	T24 F&G	706.07	701.70(N) 12"			
	249	360+03.0	45.0' LT	IN TA 2	T24 F&G	706.08			701.71(S) 12"	
	250	359+88.0	45.0' LT	CB TA 4	T24 F&G	706.07	701.59(N) 12"	700.22(E) 15"	701.58(S) 12"	700.02(W) 24"
	251	359+88.0	56.8' LT	MH TA 6	TY8 GR	704.77	697.03(N) 36"	699.96(E) 24"	697.23(S) 36"	
	252A	360+69.0	50.4' RT	IN TA 2	T24 F&G	706.24				701.87(W) 12"
	252B	360+69.0	16.4' RT	IN TB 3	T23 F&G	706.98		701.54(E) 12"		701.34(W) 12"
*	252C	360+69.0	10.4' LT	CB TA 4	T23 F&G	706.98		701.12(E) 12"		700.93(W) 12"
	252D	360+57.0	44.4' LT	CB TA 4	T24 F&G	706.20		700.60(E) 12"		700.40(W) 12"
	253	360+54.0	56.1' LT	MH TA 6	TY8 GR	705.00	696.62(N) 36"	700.34(E) 12"	696.82(S) 36"	
	254	361+00.0	55.6' LT	MH TA 6	T1F CL	706.24	696.94(N) 30"	696.12(E) 42"	696.47(S) 36"	
	255	361+01.0	59.1' RT	MH TA 6D/R-PLT	2-T1F CL	706.02		695.53(E) 42"		695.73(W) 42"
	256	359+88.0	65.0' RT	MH TA 4	T1F CL	706.34	696.99(N) 24"		697.19(S) 24"	
	257	361+01.0	74.0' RT	MH TA 6	T1F CL	705.40		694.99(E) 42"	696.45(S) 24"	695.50(W) 42"
	258A	361+50.0	57.8' RT	CB TC 2	TY8 GR	705.60				702.24(W) 12"
	258B	361+50.0	48.6' RT	CB TA 4	T24 F&G	706.60		702.19(E) 12"		701.99(W) 12"
	258C	361+50.0	42.6' LT	CB TA 4	T24 F&G	706.60		701.09(E) 12"		700.89(SW) 12"
	258	361+47.0	55.6' LT	MH TA 4	TY8 GR	704.65	697.31(N) 30"	700.80(NE) 12"	697.11(S) 30"	697.49(NW) 24"
	259	361+78.0	55.5' LT	MH TA 4	T1F CL	704.47	697.62(N) 30"		697.42(S) 30"	697.96(W) 12"
DU-38	260	362+28.0	55.5' LT	MH TA 4	TY8 GR	704.18	698.01(N) 15"	701.10(NE) 12"	697.81(S) 30"	
	261A	362+31.0	47.0' RT	IN TA 2	T24 F&G	706.96				702.59(W) 12"
	261B	362+31.0	13.0' RT	IN TB 3	T23 F&G	707.70		702.26(E) 12"		702.06(W) 12"
*	261C	362+31.0	7.0' LT	CB TA 4	T23 F&G	707.70		701.91(E) 12"		701.71(W) 12"
	261D	362+31.0	41.0' LT	CB TA 4	T24 F&G	706.96		701.40(E) 12"		701.20(SW) 12"
	262	362+50.0	55.5' LT	MH TA 4	T1F CL	705.00	698.22(N) 15"		698.19(S) 15"	699.67(W) 12"
	263	362+50.0	61.0' LT	CB TC 2	TY8 GR	704.06		699.69(E) 12"		
	264	363+09.0	55.5' LT	MH TA 4	T1F CL	705.97	698.88(N) 15"	701.75(NE) 12"	698.68(S) 15"	
	265A	363+12.0	46.7' RT	IN TA 2	T24 F&G	707.32				702.95(W) 12"
	265B	363+12.0	41.2' LT	CB TA 4	T24 F&G	707.32		702.09(E) 12"		701.89(SW) 12"
	266	363+67.0	55.5' LT	MH TA 4	T1F CL	706.93	700.92(N) 12"	699.67(NE) 12"	699.42(S) 15"	
	267B	363+93.0	45.8' RT	CB TA 4	T24 F&G	707.68				703.31(W) 12"
	267C	363+93.0	6.6' RT	CB TA 4	T23 F&G	708.50		702.94(E) 12"		700.64(W) 12"
*	267D	363+93.0	8.2' LT	CB TA 4	T23 F&G	708.42		700.55(E) 12"		700.35(SW) 12"
	267E	363+71.0	41.0' LT	CB TA 4	T24 F&G	707.59		699.97(NE) 12"		699.77(SW) 12"
	268	364+64.0	57.7' LT	MH TA 4	T1F CL	706.86		702.48(NE) 12"	701.85(S) 12"	
	269A	364+74.0	44.4' RT	IN TA 2	T24 F&G	708.04				703.67(W) 12"
	269B	364+74.0	43.6' LT	CB TA 4	T24 F&G	708.04		702.80(E) 12"		702.60(SW) 12"
	100	366+22.0	59.0' LT	CB TC 2	TY8 GR	704.95	700.58(N) 12"			
	101A	366+81.0	1.2' RT	IN TA 2	T23 F&G	708.59				704.22(W) 12"
*	101B	366+81.0	6.9' LT	IN TB 3	T23 F&G	708.59		704.18(E) 12"		703.98(NW) 12"
	101C	366+90.0	41.0' LT	CB TA 4	T24 F&G	707.78		703.65(SE) 12"		703.45(NW) 12"
	9	367+55.1	74.9' RT	12" FES					704.78(S) 12"	
	10	367+23.9	74.5' RT	12" FES			705.55(N) 12"			
	11	364+13.7	56.1' RT	12" FES					706.26(S) 12"	
	12	363+80.6	56.3' RT	12" FES			706.08(N) 12"			
	102	366+92.0	48.0' LT	MH TA 4	T1F CL	708.00	699.00(N) 12"	703.42(SE) 12"	699.20(S) 12"	
	103A	367+75.0	47.0' RT	IN TA 2	T24 F&G	706.90				702.53(NW) 12"
	103B	367+95.0	41.0' LT	CB TA 4	T24 F&G	706.62		701.63(SE) 12"		701.43(NW) 12"
	104	367+98.0	47.6' LT	MH TA 4	T1F CL	707.18	696.76(N) 12"	701.40(SE) 12"	696.96(S) 12"	

PIPE SCHEDULE

SHEET	PIPE NO.	STR. NO. FROM	STR. NO. TO	DESCRIPTION	IN DIA.	FT LEN	SLOPE	CU YD TBF
DU-37	234	234	235	SS, CL A, TY 2	12	37.8	1.01%	8.9
	235	235	236	SS, CL A, TY 2	12	54.3	1.01%	16.2
	236	236	237	SS, CL A, TY 2	12	6.9	1.01%	1.8
	237	237	238C	SS, CL A, TY 2	36	109	0.36%	50
	238A	238A	238B	SS, WMR	12	95	1.00%	22.4
	238B	238B	238C	SS, CL A, TY 2	12	6.2	1.13%	
	238	238C	242	SS, CL A, TY 2	36	110	0.36%	
	239A	239A	239B	SS, WMR	12	33.3	0.99%	7.9
	239B	239B	240	SS, CL A, TY 2	12	11.6	0.95%	3.7
	240	240	241	SS, CL A, TY 2	12	43.2	1.00%	14.7
	241	241	242	SS, CL A, TY 2	12	6.2	1.13%	
	242	242	251	SS, CL A, TY 2	36	106	0.36%	
	243	243	245	SS, WMR	12	12	1.00%	2.3
	244	244	245	SS, WMR	12	12	1.00%	2.3
	245	245	246	SS, WMR	15	31.8	1.01%	9
	246	246	247	SS, CL A, TY 2	15	19.5	1.03%	6.9
	247	247	250	SS, CL A, TY 2	15	34.8	0.98%	13.1
	248	248	250	SS, CL A, TY 2	12	12	1.00%	2.3
	249	249	250	SS, CL A, TY 2	12	12	1.00%	2.3
	250	250	251	SS, CL A, TY 2	24	5.8	1.03%	
	251	251	253	SS, CL A, TY 2	36	60	0.36%	
	252A	252A	252B	SS, WMR	12	33.3	0.99%	7.9
	252B	252B	252C	SS, CL A, TY 2	12	21.8	1.01%	7
	252C	252C	252D	SS, CL A, TY 2	12	33.7	0.98%	11.5
	252D	252D	253	SS, CL A, TY 2	12	6.1	0.98%	2.2
	253	253	254	SS, CL A, TY 2	36	40	0.36%	58.3
	254	254	255	SS, WMR	42	108.7	0.36%	159.7
	255	255	257	SS, CL A, TY 2	42	8.9	0.36%	7.4
	256	256	257	SS, CL A, TY 2	24	108.4	0.50%	111.3
	258A	258A	258B	SS, CL A, TY 2	12	5.2	0.96%	0.7
	258B	258B	258C	SS, WMR	12	89.2	1.01%	22.9
	258C	258C	258	SS, CL A, TY 2	12	8.4	1.07%	
	258	258	254	SS, CL A, TY 2	30	42	0.40%	
	259A	259A	259	SS, CL A, TY 2	24	7.5	1.00%	6.9
	259	259	258	SS, CL A, TY 2	30	28.4	0.40%	
DU-38	260	260	259	SS, CL A, TY 2	30	46	0.40%	
	262	262	260	SS, CL A, TY 2	15	18	1.00%	
	263	263	262	SS, CL A, TY 2	12	2.5	0.80%	
	261A	261A	261B	SS, WMR	12	33.3	0.99%	7.9
	261B	261B	261C	SS, CL A, TY 2	12	15	1.00%	4.8
	261C	261C	261D	SS, CL A, TY 2	12	31.8	0.97%	10.2
	261D	261D	260	SS, CL A, TY 2	12	9.8	1.02%	
	264	264	262	SS, CL A, TY 2	15	55	0.84%	
	265A	265A	265B	SS, WMR	12	86.9	0.99%	18.7
	265B	265B	264	SS, CL A, TY 2	12	9.6	1.46%	
	266	266	264	SS, CL A, TY 2	15	54	1.00%	
	267B	267B	267C	SS, WMR	12	37	1.00%	8.7
	267C	267C	267D	SS, CL A, TY 2	12	9.3	0.97%	8
	267D	267D	267E	SS, CL A, TY 2	12	37	1.03%	31.7
	267E	267E	266	SS, CL A, TY 2	12	10.1	1.00%	
	269A	269A	269B	SS, WMR	12	87	1.00%	18.7
	269B	269B	268	SS, CL A, TY 2	12	12.5	0.96%	
	6	11	12	PCUL CL A TY 1	12	33.1	0.54%	7
	5	10	9	PCUL CL A TY 1	12	31.2	2.47%	3.4
	100	100	102	SS, CL A, TY 2	12	67.9	2.03%	
	101A	101A	101B	SS, CL A, TY 2	12	4.1	0.98%	0.7
	101B	101B	101C	SS, CL A, TY 2	12	33.5	0.99%	5.8
	101C	101C	102	SS, CL A, TY 2	12	2.3	1.30%	0.4
	102	102	104	SS, CL A, TY 2	12	102	2.00%	98
	103A	103A	103B	SS, CL A, TY 2	12	89.2	1.01%	19.2
	103B	103B	104	SS, CL A, TY 2	12	2.4	1.25%	0.7

*INDICATES STRUCTURE SHALL BE INITIALLY INSTALLED USING A TYPE I FRAME AND CLOSED LID. ULTIMATELY DURING STAGED CONSTRUCTION THE FINAL FRAME AND GRATE WILL BE INSTALLED AND PAID FOR SEPARATLEY (REFER TO SUGGESTED SEQUENCE OF DRAINAGE INSTALLATION SHEETS AND STORM SEWER DRAINAGE DETAILS)

URS
100 S. WACKER DR.
SUITE 500
CHICAGO IL 60606
TEL (312)939-1000
FAX (312)939-4498

FILE NAME = D160M62-SHT-Drain Schedules.dgn	USER NAME = Frank_Stallone	DESIGNED -	REVISED -
		DRAWN -	REVISED -
	PLOT SCALE = 40.000000 ' / in.	CHECKED -	REVISED -
SHT_PLAN	PLOT DATE = 3/14/2013	DATE - 03/13/13	REVISED -

STATE OF ILLINOIS
DEPARTMENT OF TRANSPORTATION

DRAINAGE SCHEDULE

SCALE: | SHEET 06 OF 07 SHEETS | STA. TO STA.

F.A.P RTE.	SECTION	COUNTY	TOTAL SHEETS	SHEET NO.
330	103R-5	COOK	778	209
	DS-06	CONTRACT NO. 60M62		
		ILLINOIS FED. AID PROJECT		

STRUCTURE SCHEDULE

Drawing	STR. NO.	STA.	OFFSET	STRUCTURE	COVER	FINAL RIM ELEV. CONTRACT 60F05	N	E	S	W
DU-39	105A	369+40.0	47.0' RT	IN TA 2	T24 F&G	703.92				699.55(W) 12"
	105B	369+40.0	41.0' LT	CB TA 4	T24 F&G	703.92		698.68(E) 12"		698.48(W) 12"
	106	369+40.0	47.6' LT	MH TA 4	T1F CL	704.50	693.80(N) 15"	698.46(E) 12"	694.00(S) 12"	
	107A	371+25.0	47.0' RT	IN TA 2	T24 F&G	699.05				694.68(W) 12"
	107B	371+25.0	13.0' RT	IN TB 3	T23 F&G	699.79		694.35(E) 12"		694.15(W) 12"
*	107C	371+25.0	4.0' LT	CB TA 4	T23 F&G	699.83		694.03(E) 12"		693.83(W) 12"
*	108	371+25.0	33.7' LT	CB TA 4	T24 F&G	699.24		693.55(E) 12"		693.35(W) 12"
	109	371+25.0	42.9' LT	MH TA 4	T1F CL	699.78	689.98(N) 15"	693.31(E) 12"	690.18(S) 15"	
	3	372+80.7	71.0' RT	12" FES					694.71(S) 12"	
	4	372+60.2	71.0' RT	12" FES			695.55(N) 12"			
	5	372+24.3	73.0' RT	12" FES					696.40(S) 12"	
	6	372+04.7	73.0' RT	12" FES			697.20(N) 12"			
	7	368+90.1	74.0' RT	12" FES					703.06(S) 12"	
	8	368+69.2	74.0' RT	12" FES			703.35(N) 12"			
	110A	373+10.0	43.2' RT	IN TA 2	T24 F&G	694.05				689.68(W) 12"
	110B	373+10.0	30.3' LT	CB TA 4	T24 F&G	694.30		688.95(E) 12"		688.75(W) 12"
	111	373+10.0	40.4' LT	MH TA 4	T1F CL	694.85	686.16(N) 15"	688.70(E) 12"	686.36(S) 15"	
DU-40	112A	374+95.0	39.0' RT	IN TA 2	T24 F&G	689.10				684.73(W) 12"
*	112B	374+95.0	8.0' RT	IN TB 3	T23 F&G	689.69		684.43(E) 12"		684.23(W) 12"
*	112C	374+95.0	8.0' LT	CB TA 4	T23 F&G	689.67		684.12(E) 12"		683.92(W) 12"
	113	374+95.0	32.3' LT	CB TA 4	T24 F&G	688.92		683.70(E) 12"		683.50(NW) 12"
	114	374+97.0	40.0' LT	MH TA 4	T1F CL	689.54	682.30(N) 18"	683.47(SE) 12"	682.50(S) 15"	
	115	376+80.0	34.9' RT	IN TA 2	T24 F&G	683.94				679.57(W) 12"
	116	376+80.0	32.0' LT	CB TA 4	T24 F&G	683.94		678.91(E) 12"		678.71(NW) 12"
	117	376+81.0	40.0' LT	MH TA 4	T1F CL	684.02	676.31(N) 18"	678.63(SE) 12"	678.70(S) 18"	
	118A	378+65.0	32.1' RT	IN TA 2	T24 F&G	679.98				676.11(W) 12"
*	118B	378+65.0	8.0' RT	IN TB 3	T23 F&G	680.44		675.99(E) 12"		675.89(W) 12"
*	118C	378+65.0	8.0' LT	CB TA 4	T23 F&G	680.31		675.83(E) 12"		675.73(W) 12"
	119	378+65.0	32.0' LT	CB TA 4	T24 F&G	679.74		675.61(E) 12"		675.52(W) 12"
	120	378+65.0	40.2' LT	MH TA 4	T1F CL	680.08	675.31(N) 18"	675.50(E) 12"	675.41(S) 18"	
	121	378+80.0	40.3' LT	MH TA 4D/R-PLT	T1F CL	679.83	675.15(N) EX18"		675.25(S) 18"	
	1	375+91.1	69.2' RT	12" FES					683.42(S) 12"	
	2	375+71.6	69.1' RT	12" FES			684.27(N) 12"			
DU-43	24	654+42.9	36.5' RT	15" FES				689.77(E) 15"		
	25	654+72.3	36.5' RT	15" FES						689.53(W) 15"
	26	655+34.3	31.2' RT	15" FES				689.02(E) 15"		
	27	655+97.6	31.2' RT	15" FES						688.55(W) 15"
	27A	656+15.0	33.5' LT	12" FES				687.46(E) 12"		
	28A	656+51.0	33.5' LT	12" FES						686.90(W) 12"
	28	657+35.4	27.9' RT	15" FES				687.79(E) 15"		
	29	657+61.6	27.9' RT	15" FES						687.66(W) 15"
	30	658+89.8	27.0' RT	18" FES				686.88(E) 18"		
	31	659+37.8	27.0' RT	18" FES						686.47(W) 18"
DU-45	224	14+00.0	47.4' RT	IN TA 2	T24 F&G	715.58	711.21(N) 12"			
	225	14+00.0	33.0' LT	CB TA 4	T24 F&G	715.94		710.21(NE) 12"	710.41(S) 12"	
	226	14+05.0	40.6' LT	MH TA 4	T1F CL	716.30		709.97(E) 12"		710.17(SW) 12"
	227	15+80.0	57.0' RT	IN TA 2	T24 F&G	711.85	707.48(N) 12"			
	228	15+80.0	3.0' LT	CB TA 4	T23 F&G	712.87	706.69(N) 15"		706.89(S) 12"	
	229	15+80.0	33.0' LT	CB TA 4	T24 F&G	712.21		706.23(NE) 15"	706.43(S) 15"	
	230	15+85.0	40.6' LT	MH TA 4	T1F CL	712.50		705.99(E) 18"	706.19(SW) 15"	708.57(W) 12"
DU-46	300	21+46.0	4.0' RT	IN TA 2	T23 F&G	708.47	704.51(N) 12"			
	301	21+46.0	35.0' LT	CB TA 4	T24 F&G	707.55		704.23(NE) 12"	704.33(S) 12"	
	302	21+55.0	38.6' LT	MH TA 4	T1F CL	707.90		704.10(E) 12"		704.20(SW) 12"
DU-47	303	24+00.0	33.8' LT	MH TA 4	T1F CL	705.92		702.56(NE) 15"		702.64(W) 12"
	304	24+17.4	44.4' LT	12" FES		702.50				702.50(SW) 15"
	305	22+70.0	42.4' RT	CB TC 2	TY8 GR	706.70		701.39(E) 12"		
	306	23+40.0	35.0' RT	MH TA 4	T1F CL	706.49			701.05(S) 12"	701.05(W) 12"
	EX307	23+40.7	43.6' RT	EX MH		706.67	701.02(N) 12"	701.02(E) 15"	701.02(S) 15"	701.02(SW) 12"
DU-48	308	26+50.0	16.2' LT	IN TA 2	T24 F&G	701.87			698.00(S) 12"	
	309	26+50.0	16.3' RT	CB TA 4	T24 F&G	702.02	697.71(N) 12"			697.65(SW) 12"

PIPE SCHEDULE

SHEET	PIPE NO.	STR. NO. FROM	STR. NO. TO	DESCRIPTION	IN DIA.	FT LEN	SLOPE	CU YD TBF
DU-39	104	104	106	SS, CL A, TY 2	12	138	2.00%	206.8
	105A	105A	105B	SS, CL A, TY 2	12	87	1.00%	18.7
	105B	105B	106	SS, CL A, TY 2	12	1.6	1.25%	0.5
	106	106	109	SS, CL A, TY 2	15	181.1	2.00%	271.6
	107A	107A	107B	SS, CL A, TY 2	12	33.3	0.99%	7.9
	107B	107B	107C	SS, CL A, TY 2	12	12	1.00%	3.8
	107C	107C	108	SS, CL A, TY 2	12	27.5	1.02%	9.4
	108	108	109	SS, CL A, TY 2	12	4.2	0.95%	1.5
	109	109	111	SS, CL A, TY 2	15	181	2.00%	240.4
	110A	110A	110B	SS, CL A, TY 2	12	72.5	1.01%	17.1
	110B	110B	111	SS, CL A, TY 2	12	5.1	0.98%	1.7
	111	111	114	SS, CL A, TY 2	15	183	2.00%	205.4
	4	8	7	PCUL CL A TY 1	12	20.9	1.39%	1.7
	3	6	5	PCUL CL A TY 1	12	19.6	4.08%	2.7
	2	4	3	PCUL CL A TY 1	12	20.5	4.10%	2.8
DU-40	112A	112A	112B	SS, CL A, TY 2	12	30.3	0.99%	6.5
	112B	112B	112C	SS, CL A, TY 2	12	11	1.00%	3.3
	112C	112C	113	SS, CL A, TY 2	12	22.1	1.00%	6.6
	113	113	114	SS, CL A, TY 2	12	3	1.00%	
	114	114	117	SS, CL A, TY 2	18	180	2.00%	155.8
	115	115	116	SS, CL A, TY 2	12	65.9	1.00%	14.2
	116	116	117	SS, CL A, TY 2	12	3.1	2.58%	
	117	117	120	SS, CL A, TY 2	18	180	0.50%	141.8
	118A	118A	118B	SS, CL A, TY 2	12	23.4	0.51%	3.6
	118B	118B	118C	SS, CL A, TY 2	12	11	0.55%	2.1
	118C	118C	119	SS, CL A, TY 2	12	21.8	0.55%	3.8
	119	119	120	SS, CL A, TY 2	12	3.2	0.62%	
	120	120	121	SS, CL A, TY 2	18	11	0.50%	4.2
	1	2	1	PCUL CL A TY 1	12	19.5	4.36%	2.6
DU-43	18	24	25	PCUL CL A TY 1	15	29.4	0.82%	2.5
	19	26	27	PCUL CL A TY 1	15	63.3	0.74%	4.4
	19A	27A	28A	PCUL CL A TY 1	15	36	1.56%	11
	20	28	29	PCUL CL A TY 1	15	26.2	0.50%	6.7
	21	30	31	PCUL CL A TY 1	18	48	0.85%	5.1
DU-45	224	224	225	SS, CL A, TY 2	12	79.4	1.01%	18.7
	225	225	226	SS, CL A, TY 2	12	4.3	0.93%	1.5
	226	226	230	SS, CL A, TY 2	12	176	0.80%	45.2
	227	227	228	SS, CL A, TY 2	12	58.8	1.00%	15.1
	228	228	229	SS, CL A, TY 2	15	26.3	0.99%	9.3
	229	229	230	SS, CL A, TY 2	15	4.3	0.93%	1.6
	230	230	231	SS, WMR	18	162	0.80%	53.8
DU-46	300	300	301	SS, CL A, TY 1	12	36	0.50%	4.8
	301	301	302	SS, CL A, TY 1	12	5.7	0.53%	1.1
	302	302	303	SS, CL A, TY 1	12	241	0.61%	16.7
DU-47	303	303	304	SS, CL A, TY 1	15	12	0.50%	
	305	305	306	SS, CL A, TY 2	12	67.4	0.50%	22.2
	306	306	EX307	SS, CL A, TY 2	12	4.6	0.65%	1.4
DU-48	308	308	309	SS, CL A, TY 2	12	29.5	1.00%	4.5

* INDICATES STRUCTURE SHALL BE INITIALLY INSTALLED USING A TYPE I FRAME AND CLOSED LID. ULTIMATELY DURING STAGED CONSTRUCTION THE FINAL FRAME AND GRATE WILL BE INSTALLED AND PAID FOR SEPARATLEY (REFER TO SUGGESTED SEQUENCE OF DRAINAGE INSTALLATION SHEETS AND STORM SEWER DRAINAGE DETAILS)

URS
100 S. WACKER DR.
SUITE 500
CHICAGO IL 60606
TEL (312)-939-1000
FAX (312)-939-4188

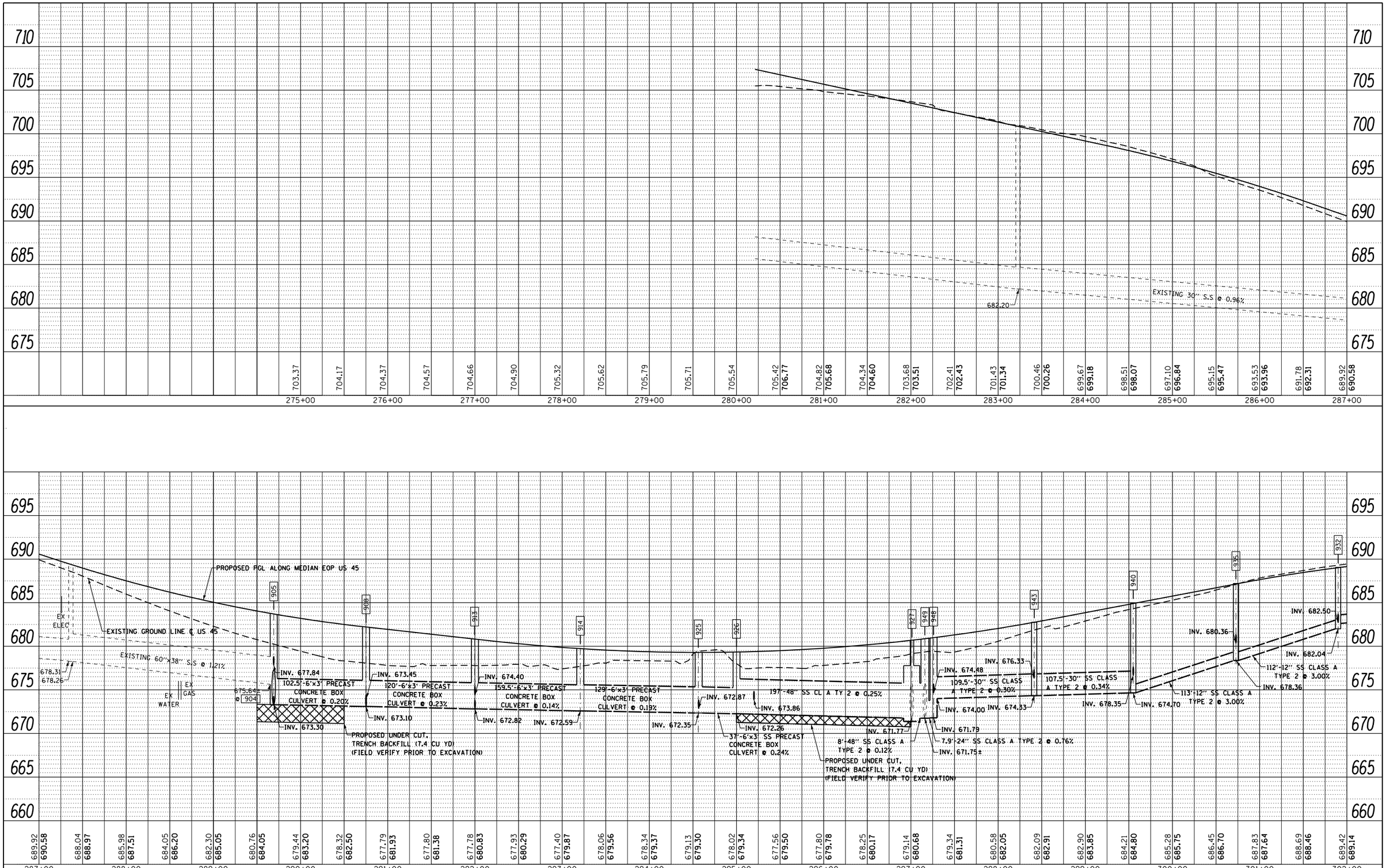

PLAN
SURVEYED
PLOTTED
ALIGNMENT CHECKED
RT. OF WAY CHECKED
CADD FILE NAME
NOTE BOOK NO.
BY
DATE

PROFILE
SURVEYED
PLOTTED
GRADES CHECKED
B.M. NOTED
STRUCTURE NOTATIONS CHKD
NOTE BOOK NO.
BY
DATE

URS
100 S. WACKER DR.
SUITE 500
CHICAGO IL 60606
TEL (312)939-1000
FAX (312)939-4198

FILE NAME = D160M62-SHT-DRAINPROF01.dgn	USER NAME = Anthony.Plutz	DESIGNED -	REVISED -
		DRAWN -	REVISED -
	PLOT SCALE = 100.000000 ' / in.	CHECKED -	REVISED -
SHT_DOUBLE PROFILE	PLOT DATE = 3/13/2013	DATE - 03/13/13	REVISED -

STATE OF ILLINOIS
DEPARTMENT OF TRANSPORTATION

DRAINAGE PROFILE – US 45 (LAGRANGE ROAD)

SCALE: 1:50 | SHEET 1 OF 4 SHEETS | STA. BEGIN TO STA. 302+00

F.A.P RTE.	SECTION	COUNTY	TOTAL SHEETS	SHEET NO.
330	103R-5	COOK	778	211
	DU-49	CONTRACT NO. 60M62		
		ILLINOIS FED. AID PROJECT		

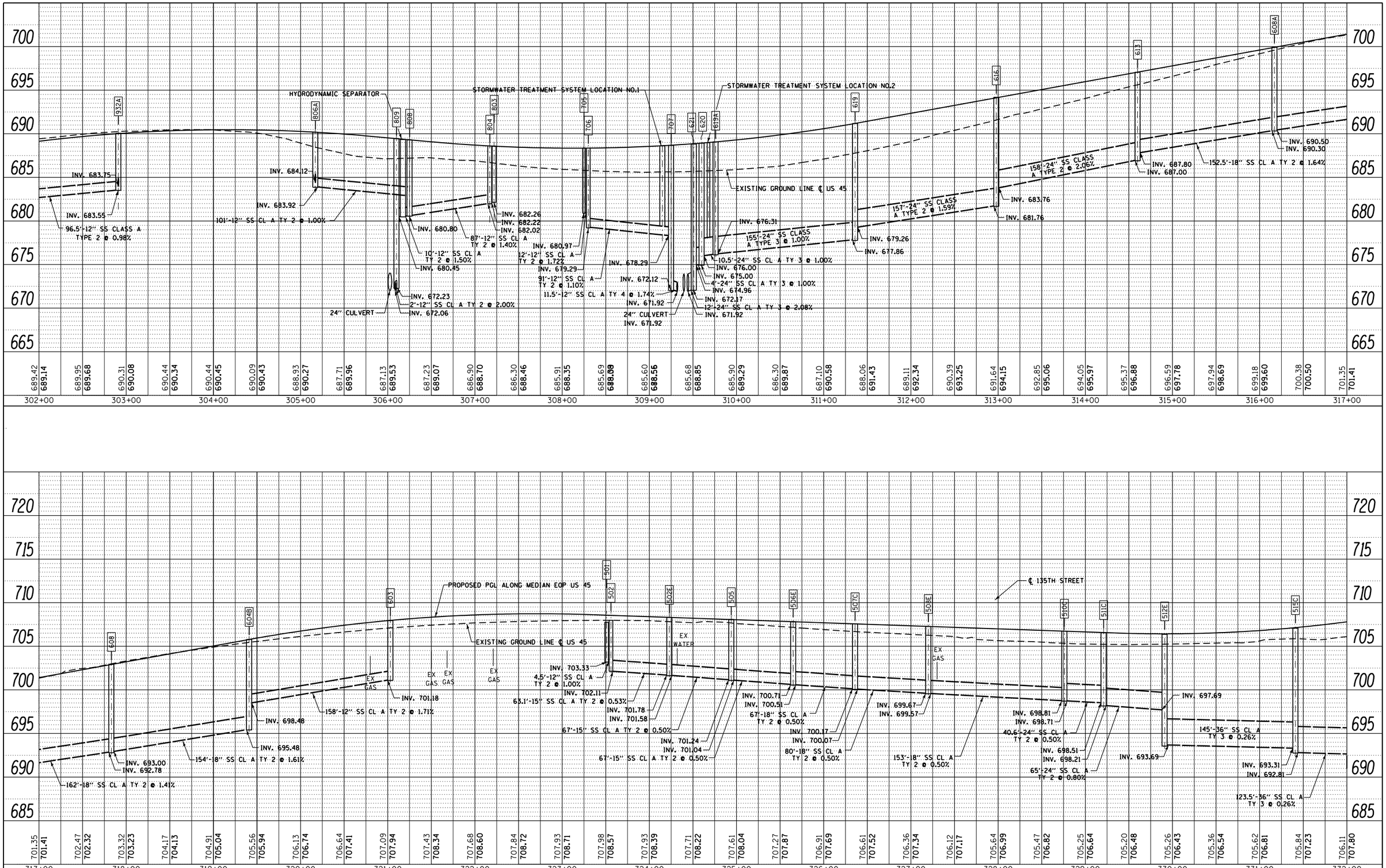

PLAN
SURVEYED
PLOTTED
ALIGNMENT CHECKED
RT. OF WAY CHECKED
CADD FILE NAME
NOTE BOOK NO.
BY
DATE

PROFILE
SURVEYED
PLOTTED
PROFILE CHECKED
B.M. NOTED
STRUCTURE NOTATIONS CHKD
NOTE BOOK NO.
BY
DATE

URS
100 S. WACKER DR.
SUITE 500
CHICAGO IL 60606
TEL (312)939-1000
FAX (312)939-4198

FILE NAME = D160M62-SHT-DRAINPROF02.dgn	USER NAME = Anthony.Plutz	DESIGNED -	REVISED -
		DRAWN -	REVISED -
	PLOT SCALE = 100.000000 ' / in.	CHECKED -	REVISED -
SHT_DOUBLE PROFILE	PLOT DATE = 3/13/2013	DATE - 03/13/13	REVISED -

STATE OF ILLINOIS
DEPARTMENT OF TRANSPORTATION

DRAINAGE PROFILE – US 45 (LAGRANGE ROAD)

SCALE: 1:50 | SHEET 2 OF 4 SHEETS | STA. 302+00 TO STA. 332+00

F.A.P RTE.	SECTION	COUNTY	TOTAL SHEETS	SHEET NO.
330	103R-5	COOK	778	212
	DU-50	CONTRACT NO. 60M62		
		ILLINOIS FED. AID PROJECT		

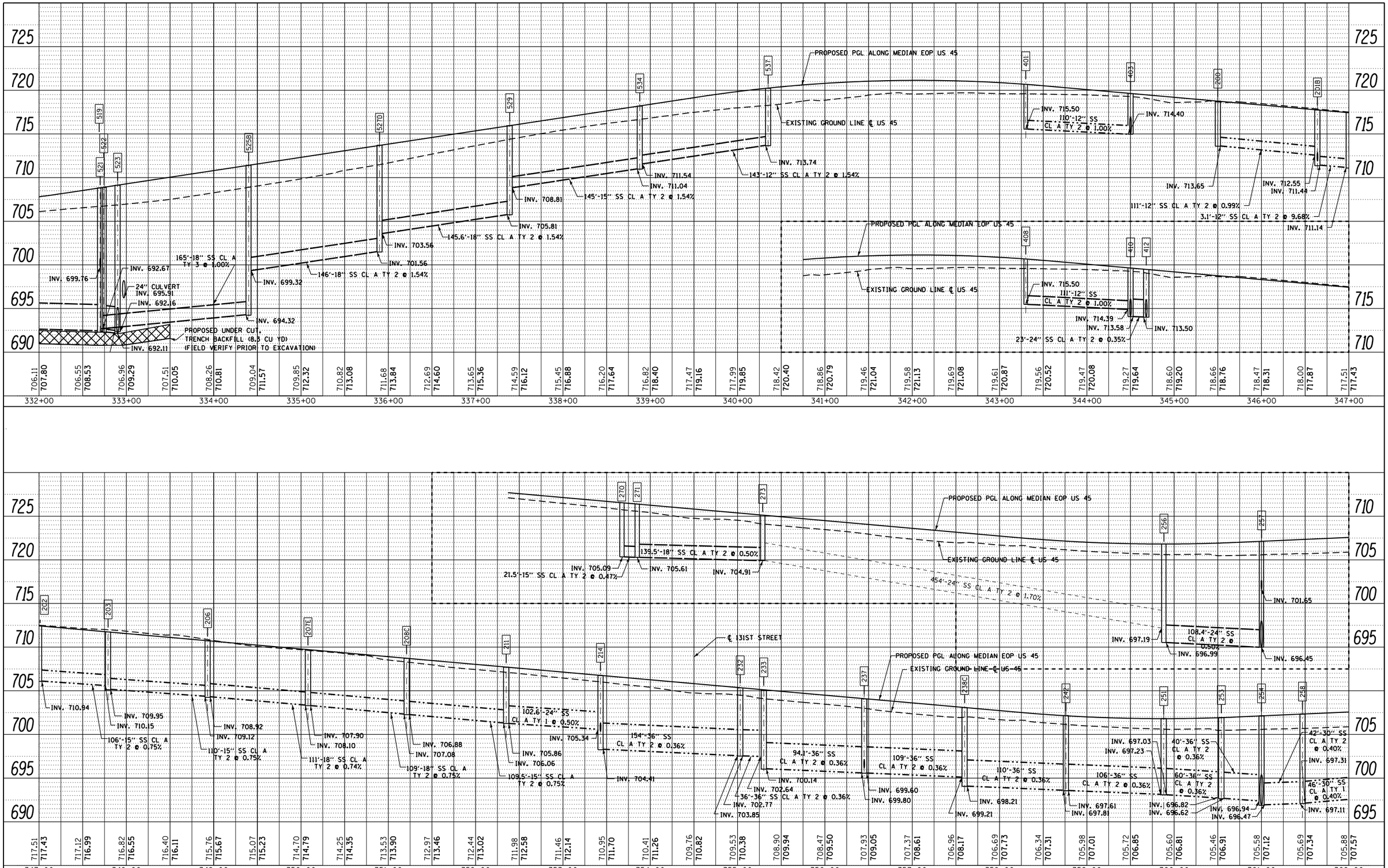

PLAN — SURVEYED / PLOTTED / ALIGNMENT CHECKED / RT. OF WAY CHECKED / CADD FILE NAME / NOTE BOOK NO. / BY / DATE

PROFILE — SURVEYED / PLOTTED / GRADES CHECKED / B.M. NOTED / STRUCTURE NOTAT'NS CHKD / NOTE BOOK NO. / BY / DATE

URS
100 S. WACKER DR.
SUITE 500
CHICAGO, IL 60606
TEL (312)939-1000
FAX (312)939-4198

FILE NAME = D160M62-SHT-DRAINPROF03.dgn	USER NAME = Anthony.Plutz	DESIGNED -	REVISED -
		DRAWN -	REVISED -
	PLOT SCALE = 100.000000 ' / in.	CHECKED -	REVISED -
SHT_DOUBLE PROFILE	PLOT DATE = 3/13/2013	DATE - 03/13/13	REVISED -

STATE OF ILLINOIS
DEPARTMENT OF TRANSPORTATION

DRAINAGE PROFILE – US 45 (LAGRANGE ROAD)

SCALE: 1:50 | SHEET 3 OF 4 SHEETS | STA. 332+00 TO STA. 362+00

F.A.P RTE.	SECTION	COUNTY	TOTAL SHEETS	SHEET NO.
330	103R-5	COOK	778	213
	DU-51	CONTRACT NO. 60M62		
		ILLINOIS FED. AID PROJECT		

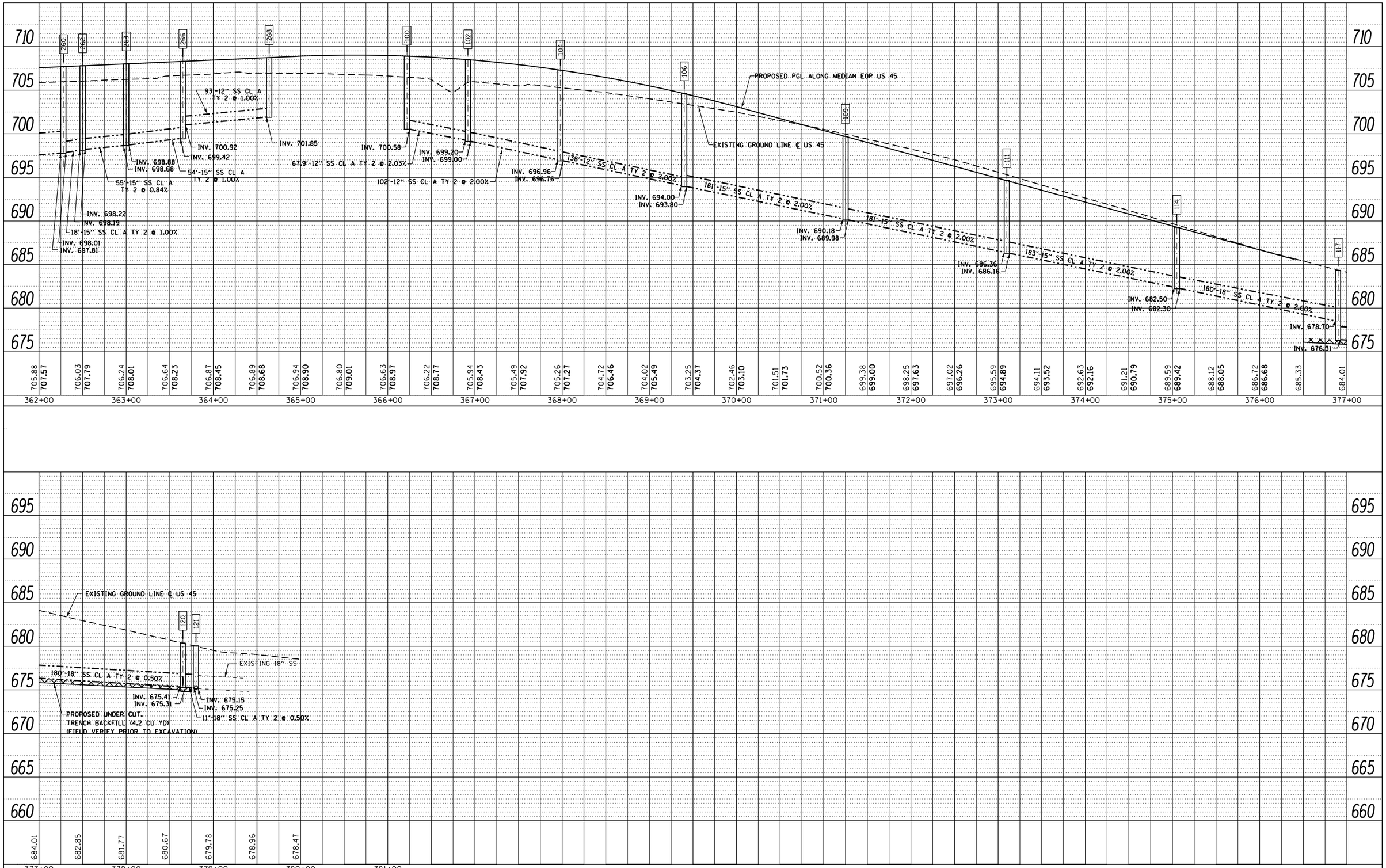

PLAN — SURVEYED / PLOTTED / ALIGNMENT CHECKED / RT. OF WAY CHECKED / CADD FILE NAME — NOTE BOOK NO. ____ — BY — DATE

PROFILE — SURVEYED / PLOTTED / GRADES CHECKED / B.M. NOTED / STRUCTURE NOTATIONS CHKD — NOTE BOOK NO. ____ — BY — DATE

URS
100 S. WACKER DR.
SUITE 500
CHICAGO IL 60606
TEL (312)-939-1000
FAX (312)-939-4198

FILE NAME = D160M62-SHT-DRAINPROF04.dgn	USER NAME = Anthony.Plutz	DESIGNED -	REVISED -
		DRAWN -	REVISED -
	PLOT SCALE = 100.000000 ' / in.	CHECKED -	REVISED -
SHT_DOUBLE PROFILE	PLOT DATE = 3/13/2013	DATE - 03/13/13	REVISED -

STATE OF ILLINOIS
DEPARTMENT OF TRANSPORTATION

DRAINAGE PROFILE – US 45 (LAGRANGE ROAD)

SCALE: 1:50 | SHEET 4 OF 4 SHEETS | STA. 362+00 TO STA. END

F.A.P RTE.	SECTION	COUNTY	TOTAL SHEETS	SHEET NO.
330	103R-5	COOK	778	214
	DU-52	CONTRACT NO. 60M62		
		ILLINOIS FED. AID PROJECT		

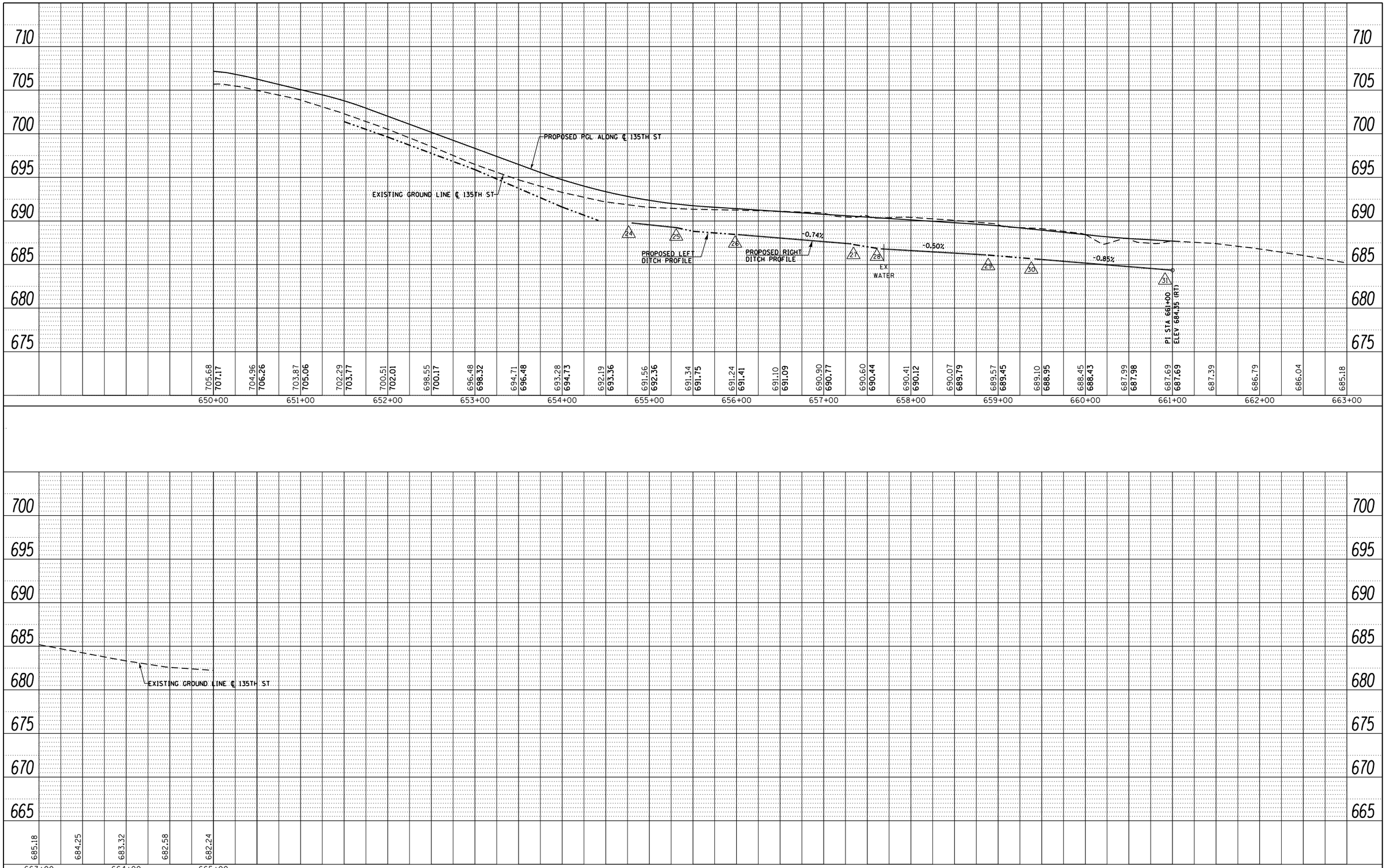

PLAN	BY	DATE
SURVEYED		
PLOTTED		
ALIGNMENT CHECKED		
RT. OF WAY CHECKED		
CADD FILE NAME		
NOTE BOOK NO.		

PROFILE	BY	DATE
SURVEYED		
PLOTTED		
GRADES CHECKED		
B.M. NOTED		
STRUCTURE NOTATIONS CHKD		
NOTE BOOK NO.		

URS
100 S. WACKER DR.
SUITE 500
CHICAGO IL 60606
TEL (312)-939-1000
FAX (312)-939-4198

FILE NAME = D160M62-SHT-DRAINPROF05.dgn	USER NAME = Anthony.Plutz	DESIGNED -	REVISED -
		DRAWN -	REVISED -
	PLOT SCALE = 100.000000 ' / in.	CHECKED -	REVISED -
SHT_DOUBLE PROFILE	PLOT DATE = 3/13/2013	DATE - 03/13/13	REVISED -

STATE OF ILLINOIS
DEPARTMENT OF TRANSPORTATION

DRAINAGE PROFILE – 135TH STREET

SCALE: 1:50 | SHEET 1 OF 1 SHEETS | STA. 650+00 TO STA. 665+00

F.A.P RTE.	SECTION	COUNTY	TOTAL SHEETS	SHEET NO.
330	103R-5	COOK	778	215
	DU-53	CONTRACT NO. 60M62		
		ILLINOIS FED. AID PROJECT		

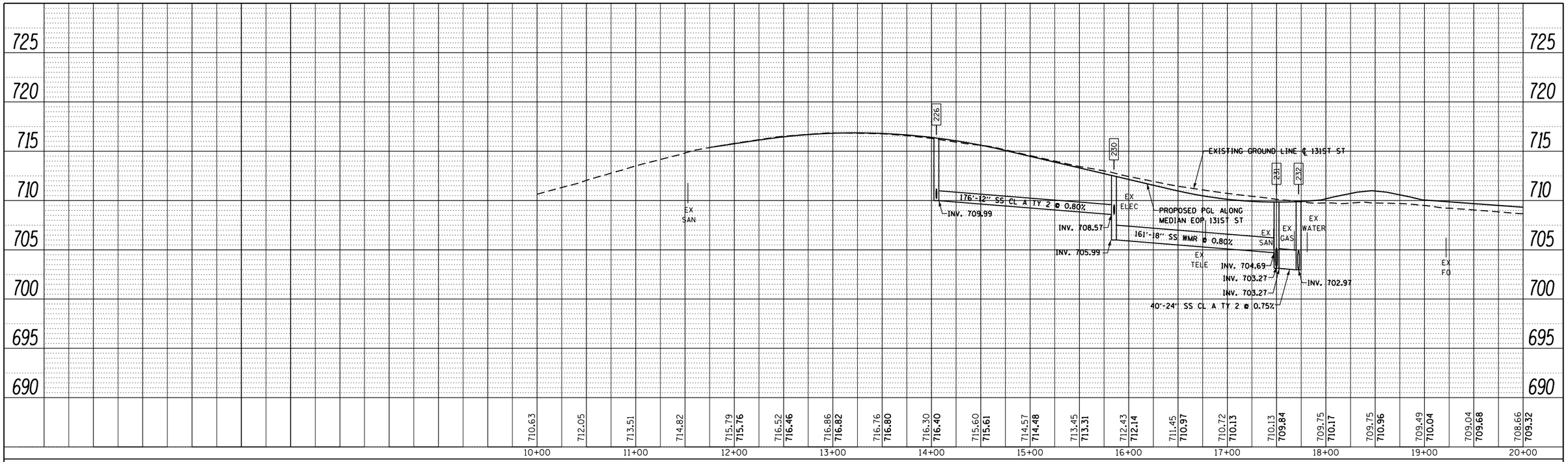

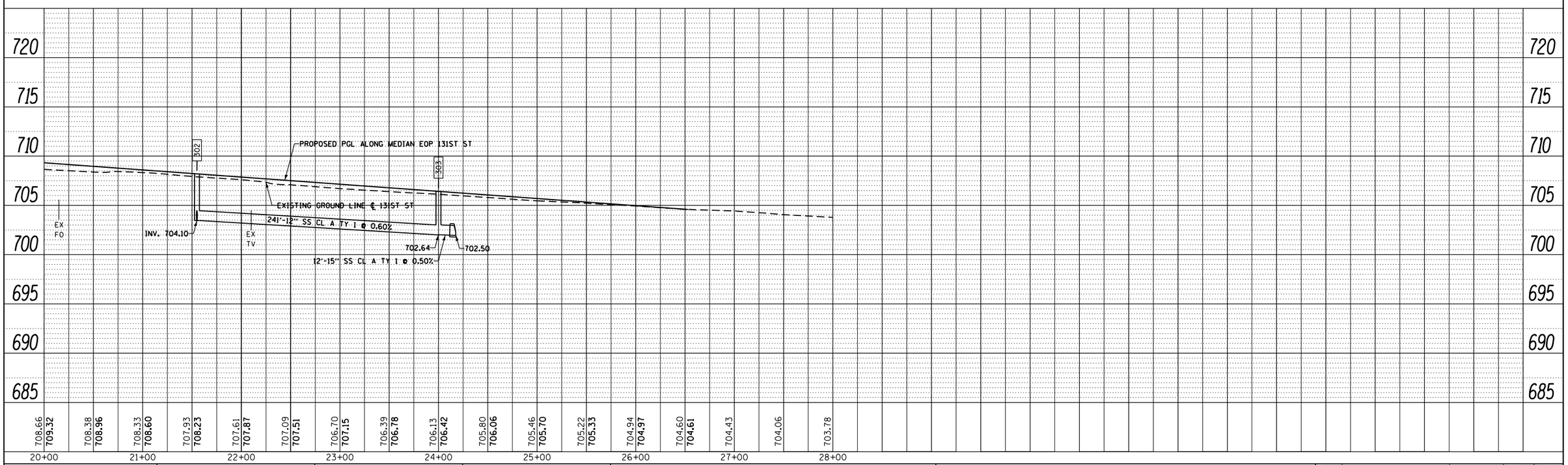

PLAN

BY	DATE

SURVEYED
PLOTTED
ALIGNMENT CHECKED
RT. OF WAY CHECKED
CADD FILE NAME

NOTE BOOK NO.

PROFILE

BY	DATE

SURVEYED
PLOTTED
GRADES CHECKED
B.M. NOTED
STRUCTURE NOTATIONS CHKD

NOTE BOOK NO.

URS
100 S. WACKER DR.
SUITE 500
CHICAGO IL 60606
TEL (312)-939-1000
FAX (312)-939-4198

FILE NAME = D160M62-SHT-DRAINPROF06.dgn	USER NAME = Anthony.Plutz	DESIGNED -	REVISED -
		DRAWN -	REVISED -
	PLOT SCALE = 100.000000 ' / in.	CHECKED -	REVISED -
SHT_DOUBLE PROFILE	PLOT DATE = 3/13/2013	DATE - 03/13/13	REVISED -

STATE OF ILLINOIS
DEPARTMENT OF TRANSPORTATION

DRAINAGE PROFILE – 131ST STREET

SCALE: 1:50 | SHEET 1 OF 1 SHEETS | STA. 10+00 TO STA. 28+00

F.A.P RTE.	SECTION	COUNTY	TOTAL SHEETS	SHEET NO.
330	103R-5	COOK	778	216
	DU-54	CONTRACT NO. 60M62		
		ILLINOIS FED. AID PROJECT		

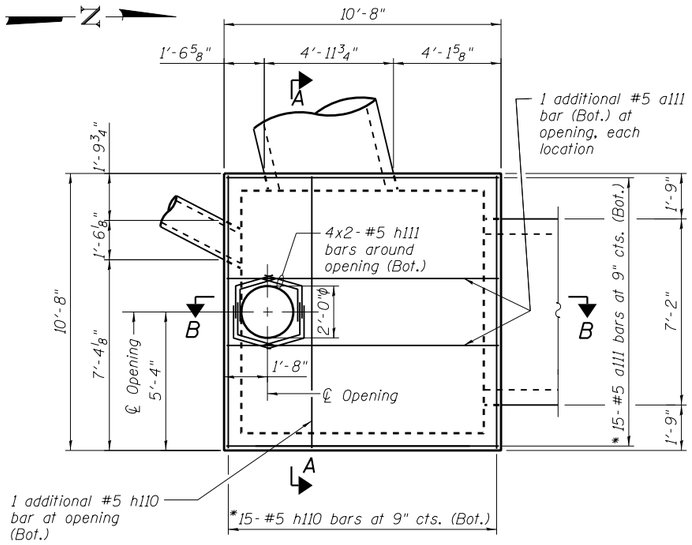

TOP PLAN

*Trim to fit around opening

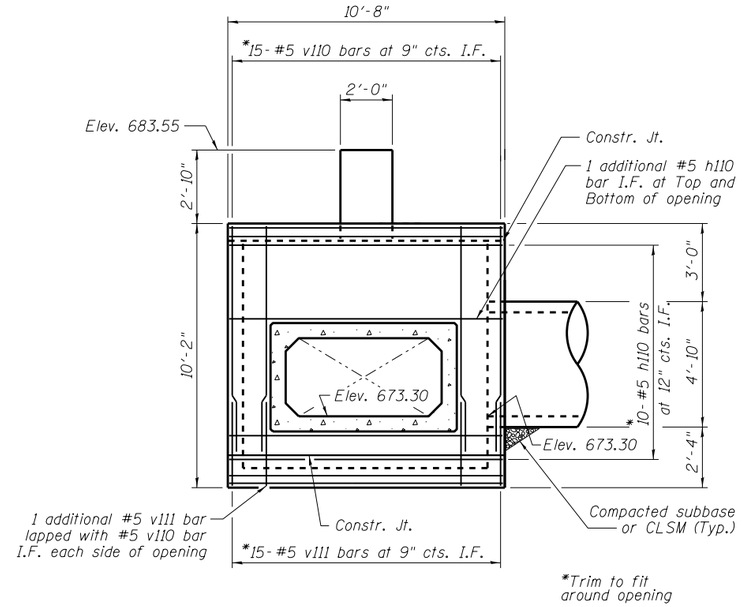

*Trim to fit around opening

NORTH ELEVATION

(Looking South)

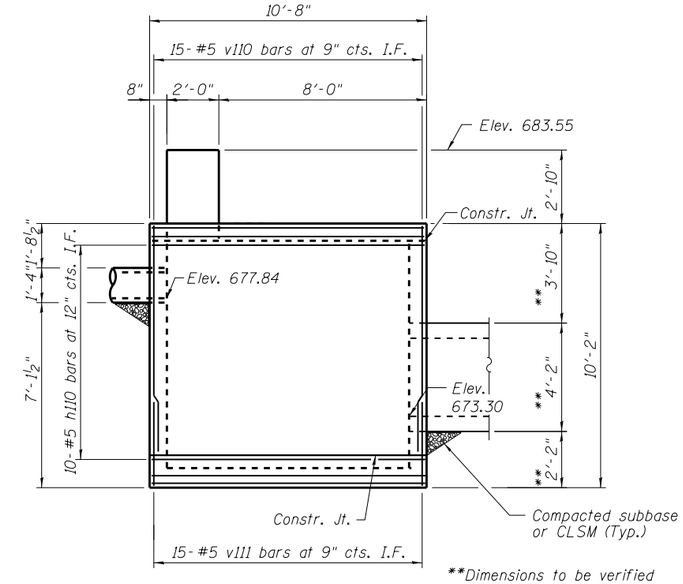

**Dimensions to be verified with precast concrete box culvert manufacturer.

EAST ELEVATION

(Looking West)

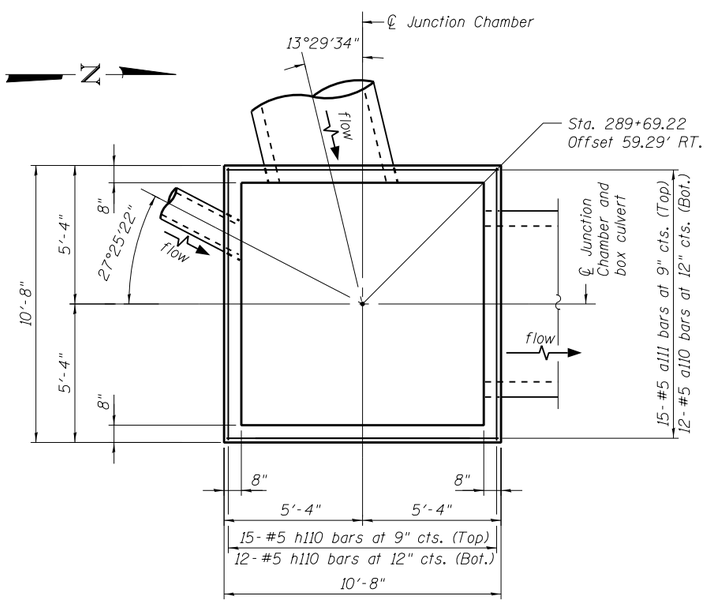

BOTTOM PLAN

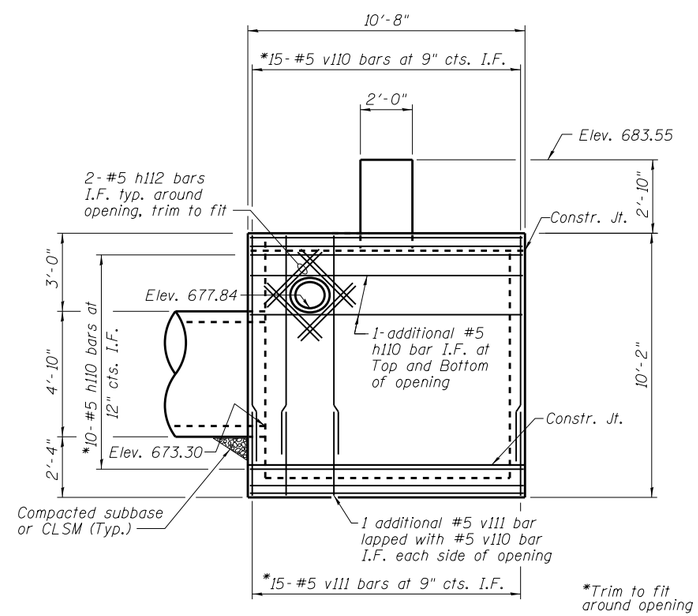

*Trim to fit around opening

SOUTH ELEVATION

(Looking North)

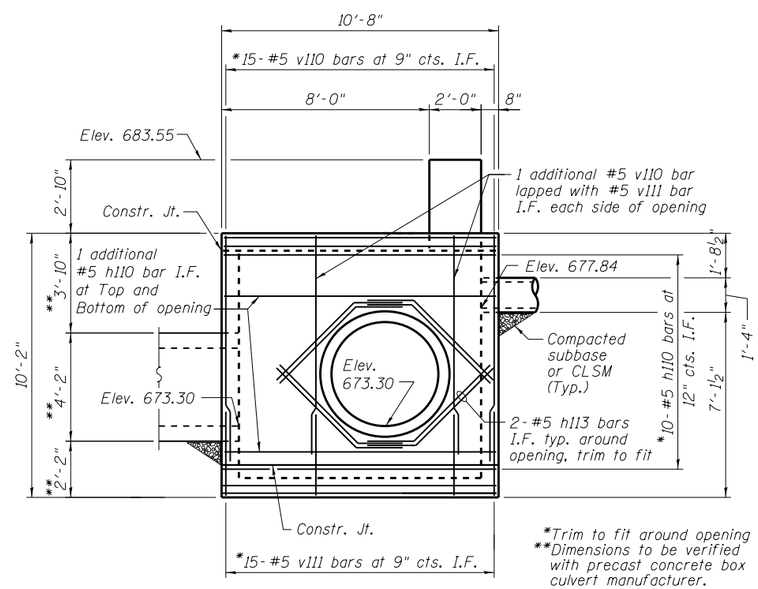

*Trim to fit around opening
**Dimensions to be verified with precast concrete box culvert manufacturer.

WEST ELEVATION

(Looking East)

URS
100 S. WACKER DR.
SUITE 500
CHICAGO IL 60606
TEL (312)939-1000
FAX (312)939-4198

FILE NAME = D160M62-SHT-JC1-01.dgn	USER NAME = Anthony.Plutz	DESIGNED - PMH	REVISED -
		CHECKED - MJL	REVISED -
	PLOT SCALE = 5.83 ' / in.	DRAWN - AMV	REVISED -
	PLOT DATE = 3/12/2013	CHECKED - PMH	REVISED -

STATE OF ILLINOIS
DEPARTMENT OF TRANSPORTATION

JUNCTION CHAMBER NO. 1
PLANS AND ELEVATIONS

SHEET NO. 1 OF 2 SHEETS

F.A.P RTE.	SECTION	COUNTY	TOTAL SHEETS	SHEET NO.
330	103R-5	COOK	778	217
		CONTRACT NO. 60M62		
		ILLINOIS FED. AID PROJECT		

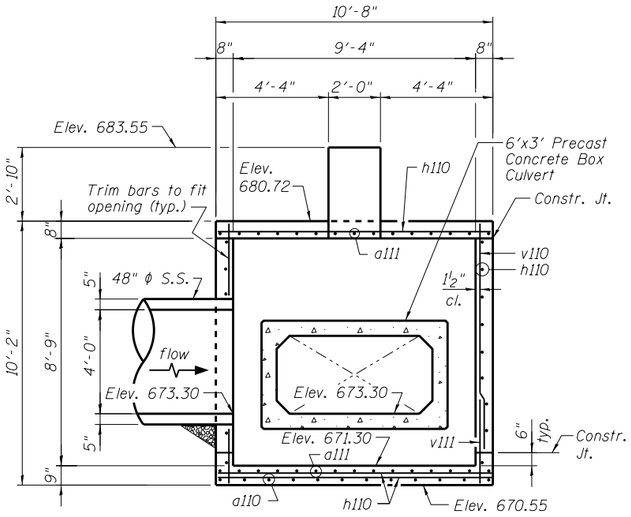

SECTION A-A

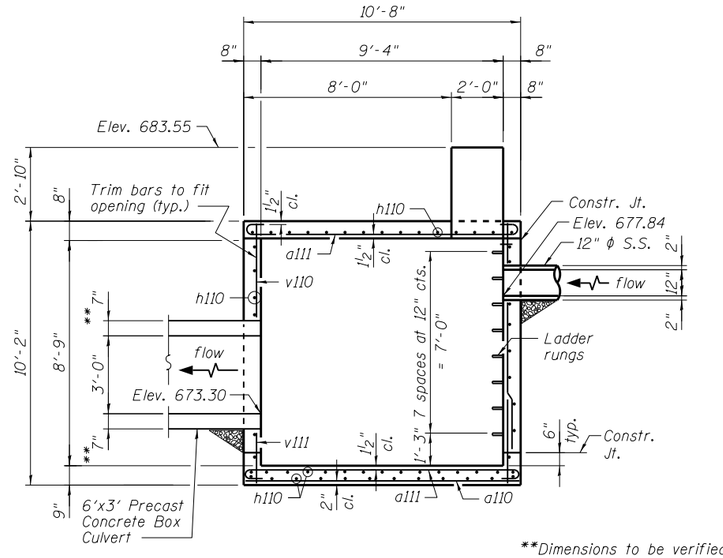

SECTION B-B

**Dimensions to be verified with precast concrete box culvert manufacturer.

Notes:
Bars indicated thus 12x4-#5 etc. indicates 12 lines of bars with 4 lengths per line.
Reinforcement bars shall conform to the requirements of ASTM A 706 Gr 60. See Special Provisions.

BILL OF MATERIAL

Bar	No.	Size	Length	Shape
a110	12	#5	10'-4"	
a111	32	#5	11'-9"	
h110	89	#5	10'-5"	
h111	8	#5	2'-9"	
h112	8	#5	3'-0"	
h113	8	#5	6'-4"	
v110	66	#5	8'-8"	
v111	66	#5	2'-4"	
Structure Excavation			Cu. Yd.	116
Concrete Structures			Cu. Yd.	13.3
Reinforcement Bars			Pound	2,350

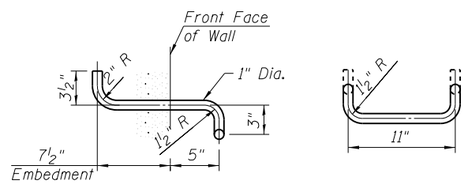

SIDE VIEW FRONT VIEW

TYPE Z LADDER RUNG ELEVATIONS

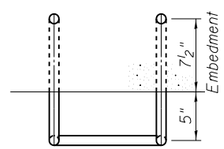

TYPE Z LADDER RUNG PLAN

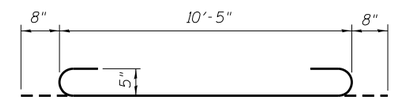

BAR a111

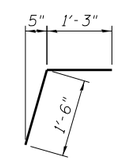

BAR h111

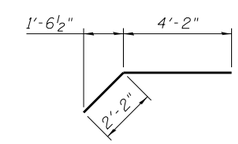

BAR h113

1. The ladder rungs shall be aluminum, conforming to ASTM B361-Alloy 6061-T6 or shall be ductile iron. Aluminum ladder rungs shall receive a heavy coat of bituminous paint or cold applied asphaltic mastic for the portion embedded in concrete. The coating must extend beyond the embedment at least two inches.
2. The contractor may submit an alternative ladder rung detail for Engineer's approval.

Note: All costs for compacted subbase or CLSM, ladder rungs, and all other appurtenances required to complete this work shall be included in the item "Concrete Structures."

DESIGN STRESSES

fy = 60,000 psi
f'c = 3,500 psi

URS
100 S. WACKER DR.
SUITE 500
CHICAGO IL 60606
TEL (312)939-1000
FAX (312)939-9498

FILE NAME = D160M62-SHT-JC1-02.dgn	USER NAME = Anthony.Plutz	DESIGNED - PMH	REVISED -	STATE OF ILLINOIS DEPARTMENT OF TRANSPORTATION	JUNCTION CHAMBER NO. 1 DETAILS	F.A.P RTE. 330	SECTION 103R-5	COUNTY COOK	TOTAL SHEETS 778	SHEET NO. 218
		CHECKED - MJL	REVISED -					CONTRACT NO. 60M62		
	PLOT SCALE = 5.83 ' / in.	DRAWN - AMV	REVISED -							
	PLOT DATE = 3/12/2013	CHECKED - PMH	REVISED -		SHEET NO. 2 OF 2 SHEETS		ILLINOIS FED. AID PROJECT			

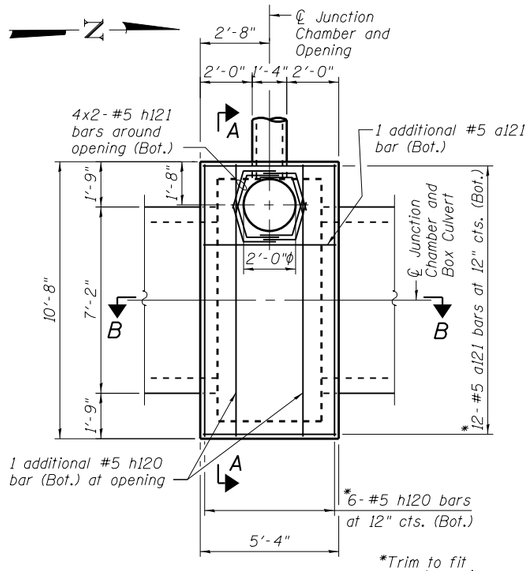

TOP PLAN

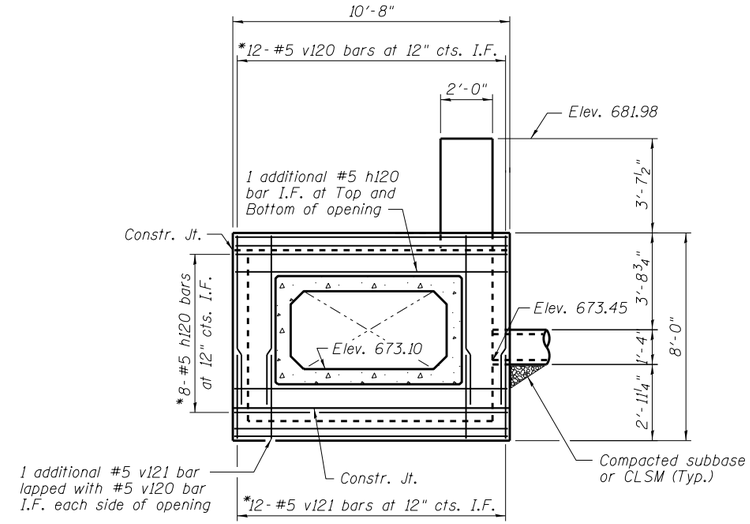

NORTH ELEVATION

(Looking South)

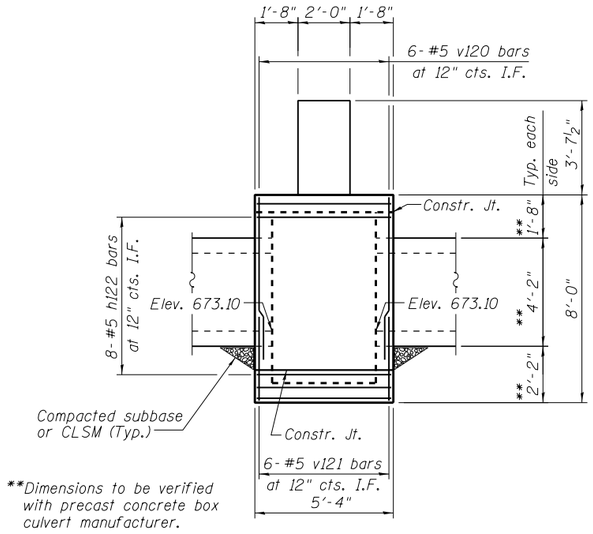

EAST ELEVATION

(Looking West)

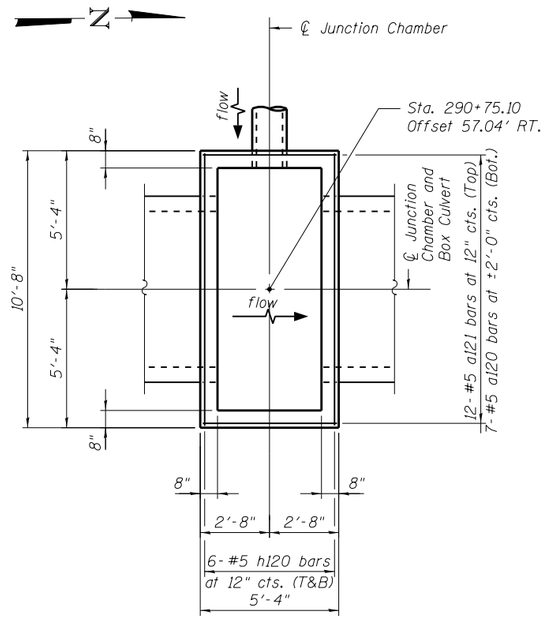

BOTTOM PLAN

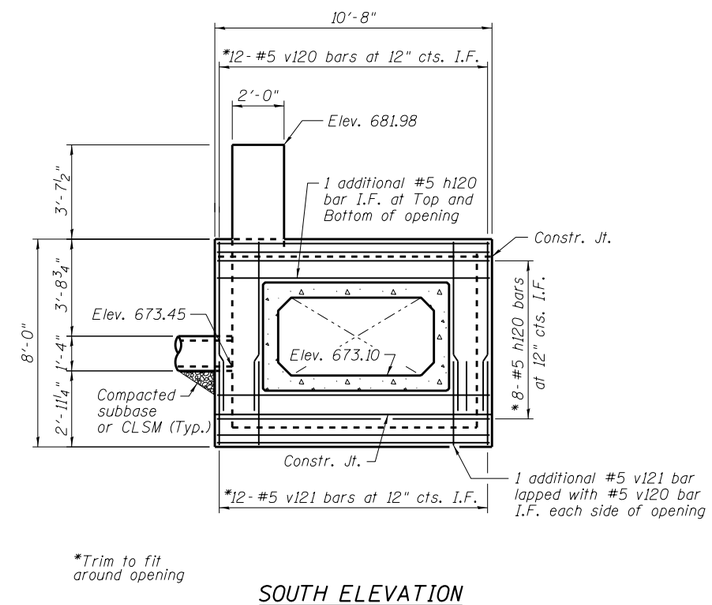

SOUTH ELEVATION

(Looking North)

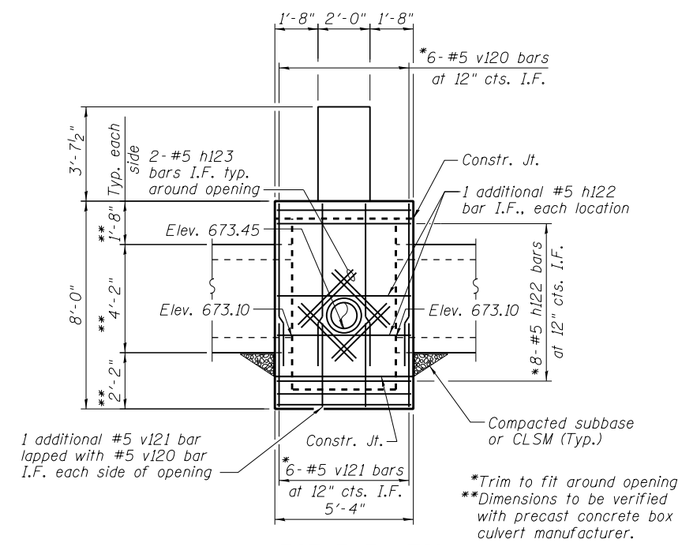

WEST ELEVATION

(Looking East)

URS
100 S. WACKER DR.
SUITE 500
CHICAGO IL 60606
TEL (312)939-1000
FAX (312)939-4198

FILE NAME = D160M62-SHT-JC2-01.dgn	USER NAME = Anthony.Plutz	DESIGNED - PMH	REVISED -	STATE OF ILLINOIS DEPARTMENT OF TRANSPORTATION	JUNCTION CHAMBER NO. 2 PLANS AND ELEVATIONS	F.A.P RTE.	SECTION	COUNTY	TOTAL SHEETS	SHEET NO.
		CHECKED - MJL	REVISED -			330	103R-5	COOK	778	219
	PLOT SCALE = 5.83 ' / in.	DRAWN - AMV	REVISED -					CONTRACT NO. 60M62		
	PLOT DATE = 3/12/2013	CHECKED - PMH	REVISED -		SHEET NO. 1 OF 2 SHEETS		ILLINOIS	FED. AID PROJECT		

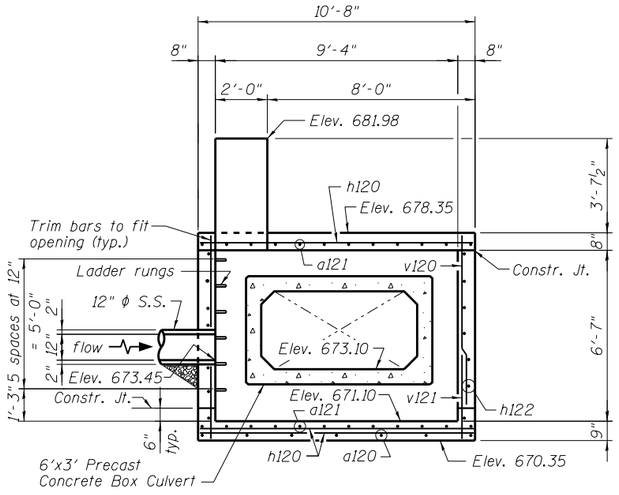

SECTION A-A

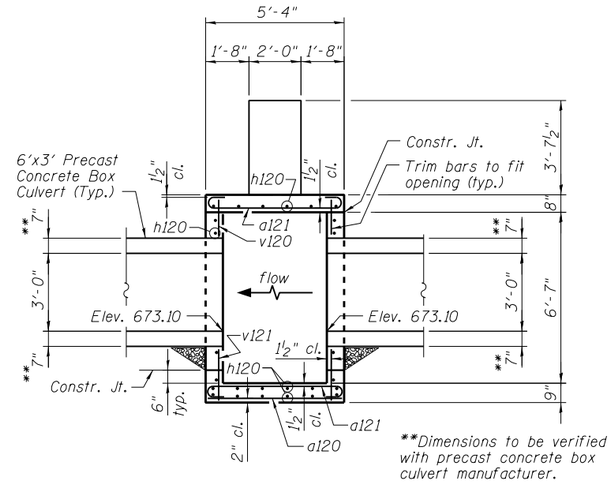

SECTION B-B

Notes:
Bars indicated thus 12x4-#5 etc. indicates 12 lines of bars with 4 lengths per line.
Reinforcement bars shall conform to the requirements of ASTM A 706 Gr 60. See Special Provisions.

BILL OF MATERIAL

Bar	No.	Size	Length	Shape
a120	7	#5	5'-0"	
a121	25	#5	6'-3"	
h120	40	#5	10'-4"	
h121	8	#5	2'-9"	
h122	18	#5	5'-1"	
h123	8	#5	3'-0"	
v120	42	#5	6'-6"	
v121	42	#5	2'-4"	
Structure Excavation			Cu. Yd.	62
Concrete Structures			Cu. Yd.	6.2
Reinforcement Bars			Pound	1,170

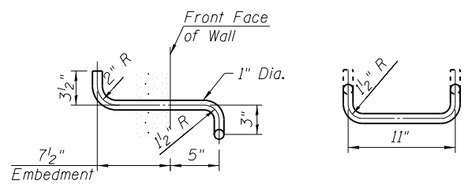

SIDE VIEW FRONT VIEW

TYPE Z LADDER RUNG ELEVATIONS

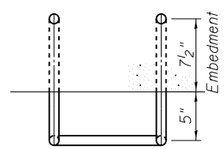

TYPE Z LADDER RUNG PLAN

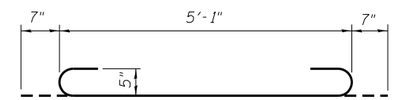

BAR a121

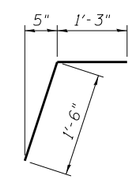

BAR h121

1. The ladder rungs shall be aluminum, conforming to ASTM B361-Alloy 6061-T6 or shall be ductile iron. Aluminum ladder rungs shall receive a heavy coat of bituminous paint or cold applied asphaltic mastic for the portion embedded in concrete. The coating must extend beyond the embedment at least two inches.
2. The contractor may submit an alternative ladder rung detail for Engineer's approval.

Note: All costs for compacted subbase or CLSM, ladder rungs and all other appurtenances required to complete this work shall be included in the item "Concrete Structures."

DESIGN STRESSES

fy = 60,000 psi
f'c = 3,500 psi

URS
100 S. WACKER DR.
SUITE 500
CHICAGO IL 60606
TEL (312)939-1000
FAX (312)939-9498

FILE NAME = D160M62-SHT-JC2-02.dgn	USER NAME = Anthony.Plutz	DESIGNED - PMH	REVISED -	STATE OF ILLINOIS DEPARTMENT OF TRANSPORTATION	JUNCTION CHAMBER NO. 2 DETAILS	F.A.P RTE.	SECTION	COUNTY	TOTAL SHEETS	SHEET NO.
		CHECKED - MJL	REVISED -			330	103R-5	COOK	778	220
	PLOT SCALE = 5.83 ' / in.	DRAWN - AMV	REVISED -					CONTRACT NO. 60M62		
	PLOT DATE = 3/12/2013	CHECKED - PMH	REVISED -		SHEET NO. 2 OF 2 SHEETS		ILLINOIS	FED. AID PROJECT		

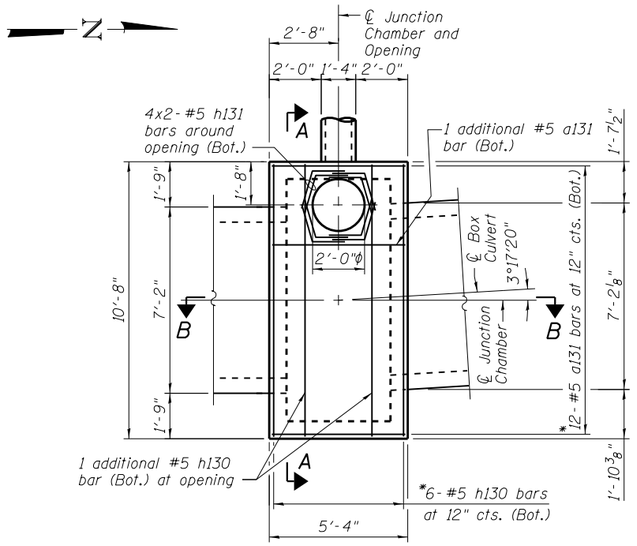

*Trim to fit around opening

TOP PLAN

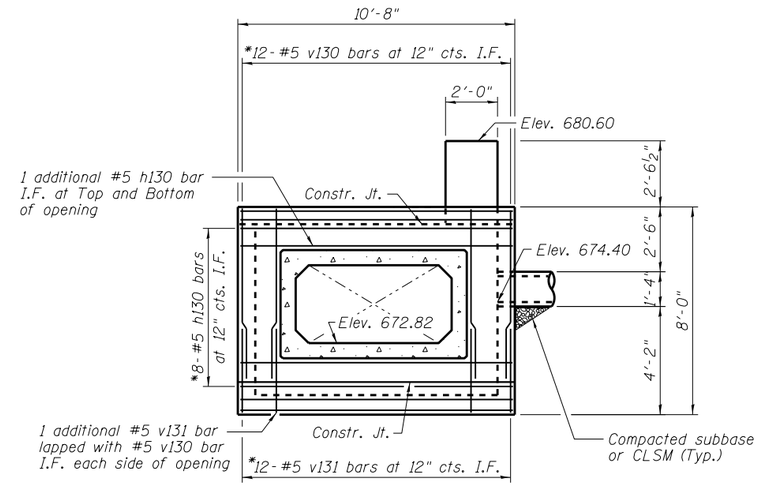

*Trim to fit around opening

NORTH ELEVATION

(Looking South)

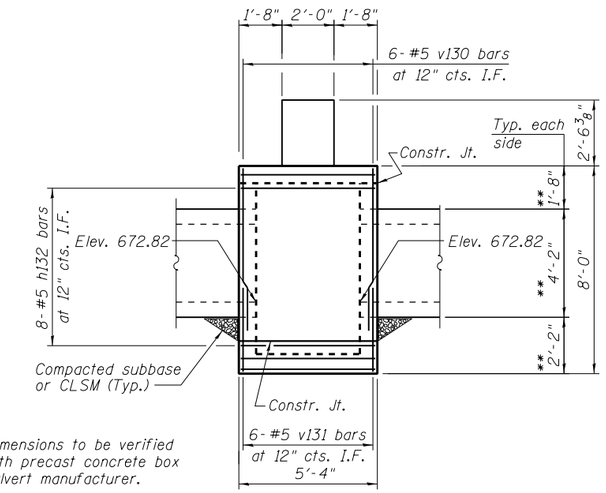

**Dimensions to be verified with precast concrete box culvert manufacturer.

EAST ELEVATION

(Looking West)

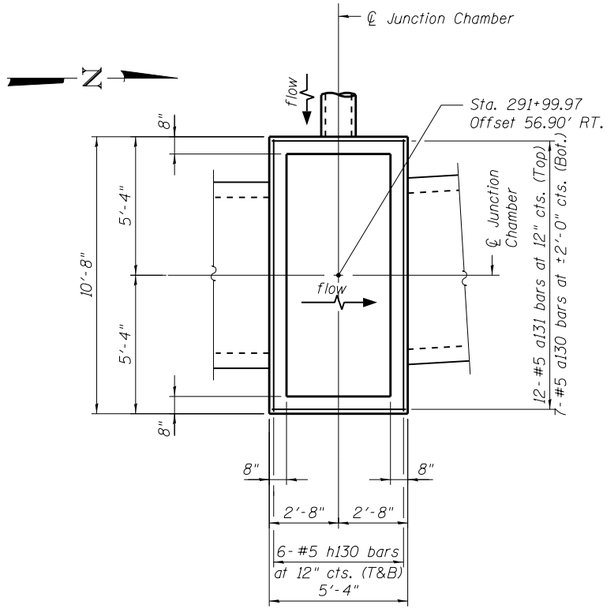

BOTTOM PLAN

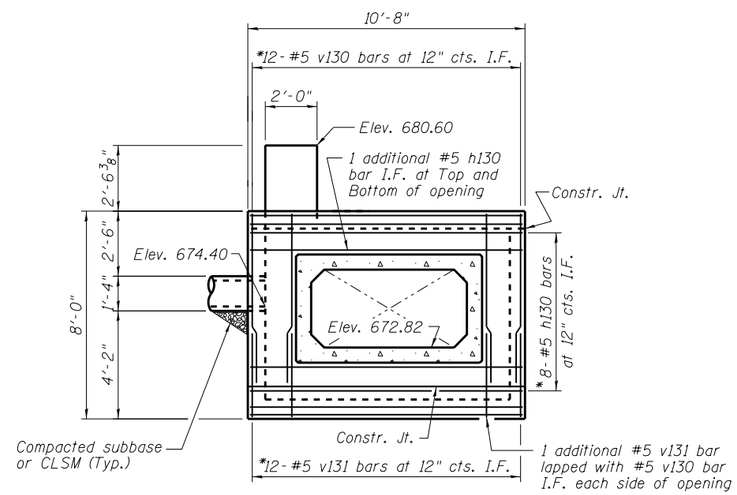

*Trim to fit around opening

SOUTH ELEVATION

(Looking North)

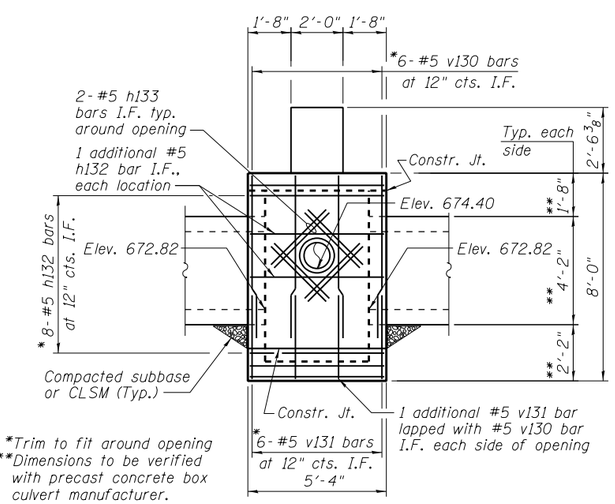

*Trim to fit around opening
**Dimensions to be verified with precast concrete box culvert manufacturer.

WEST ELEVATION

(Looking East)

URS
100 S. WACKER DR.
SUITE 500
CHICAGO ILL 60606
TEL (312)939-1000
FAX (312)939-4189

FILE NAME = D160M62-SHT-JC3-01.dgn	USER NAME = Anthony.Plutz	DESIGNED - PMH	REVISED -
		CHECKED - MJL	REVISED -
	PLOT SCALE = 5:10 ':' / in.	DRAWN - AMV	REVISED -
	PLOT DATE = 3/12/2013	CHECKED - PMH	REVISED -

STATE OF ILLINOIS
DEPARTMENT OF TRANSPORTATION

JUNCTION CHAMBER NO. 3
PLANS AND ELEVATIONS

SHEET NO. 1 OF 2 SHEETS

F.A.P RTE.	SECTION	COUNTY	TOTAL SHEETS	SHEET NO.
330	103R-5	COOK	778	221

CONTRACT NO. 60M62

ILLINOIS FED. AID PROJECT

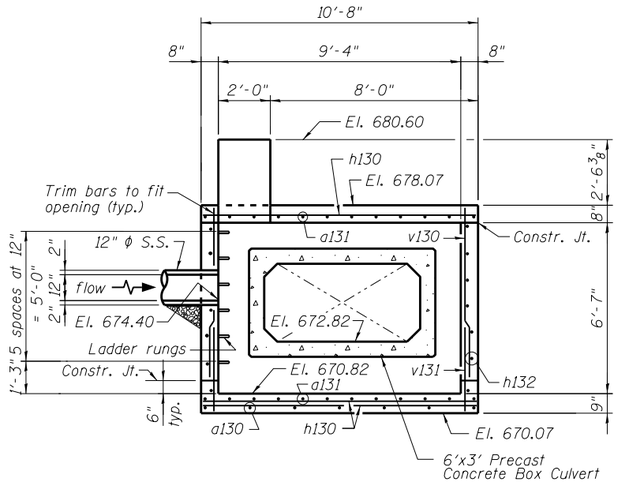

SECTION A-A

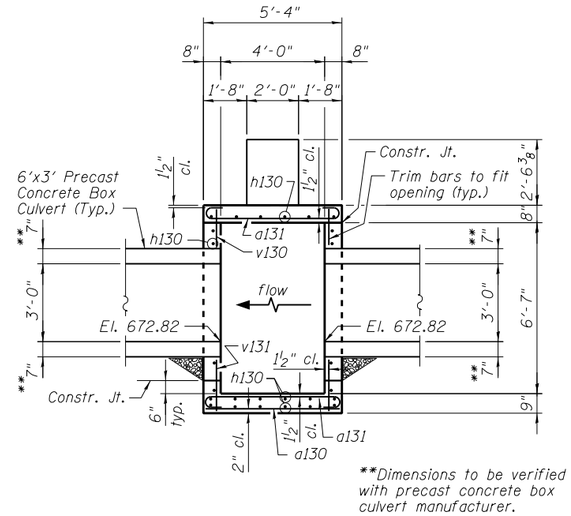

**Dimensions to be verified with precast concrete box culvert manufacturer.

SECTION B-B

Notes:
Bars indicated thus 12x4-#5 etc. indicates 12 lines of bars with 4 lengths per line.
Reinforcement bars shall conform to the requirements of ASTM A 706 Gr 60. See Special Provisions.

BILL OF MATERIAL

Bar	No.	Size	Length	Shape
a130	7	#5	5'-0"	
a131	25	#5	6'-3"	
h130	40	#5	10'-4"	
h131	8	#5	2'-9"	
h132	18	#5	5'-1"	
h133	8	#5	3'-0"	
v130	42	#5	6'-6"	
v131	42	#5	2'-4"	
Structure Excavation			Cu. Yd.	56
Concrete Structures			Cu. Yd.	6.2
Reinforcement Bars			Pound	1,170

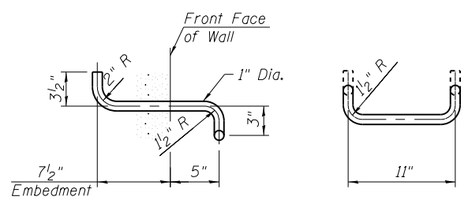

SIDE VIEW FRONT VIEW

TYPE Z LADDER RUNG ELEVATIONS

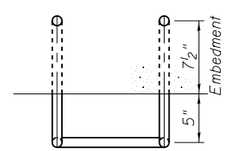

TYPE Z LADDER RUNG PLAN

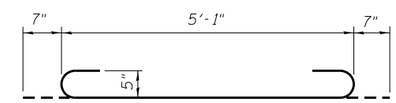

BAR a131

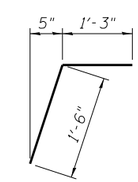

BAR h131

1. The ladder rungs shall be aluminum, conforming to ASTM B361-Alloy 6061-T6 or shall be ductile iron. Aluminum ladder rungs shall receive a heavy coat of bituminous paint or cold applied asphaltic mastic for the portion embedded in concrete. The coating must extend beyond the embedment at least two inches.
2. The contractor may submit an alternative ladder rung detail for Engineer's approval.

Note: All costs for compacted subbase or CLSM, ladder rungs and all other appurtenances required to complete this work shall be included in the item "Concrete Structures."

DESIGN STRESSES

fy = 60,000 psi
f'c = 3,500 psi

URS
100 S. WACKER DR.
SUITE 500
CHICAGO IL 60606
TEL (312)939-1000
FAX (312)939-9498

FILE NAME = D160M62-SHT-JC3-02.dgn	USER NAME = Anthony.Plutz	DESIGNED - PMH	REVISED -	STATE OF ILLINOIS DEPARTMENT OF TRANSPORTATION	JUNCTION CHAMBER NO. 3 DETAILS	F.A.P RTE.	SECTION	COUNTY	TOTAL SHEETS / SHEET NO.
		CHECKED - MJL	REVISED -			330	103R-5	COOK	778 / 222
	PLOT SCALE = 5:10 ':' / in.	DRAWN - AMV	REVISED -			CONTRACT NO. 60M62			
	PLOT DATE = 3/12/2013	CHECKED - PMH	REVISED -		SHEET NO. 2 OF 2 SHEETS	ILLINOIS FED. AID PROJECT			

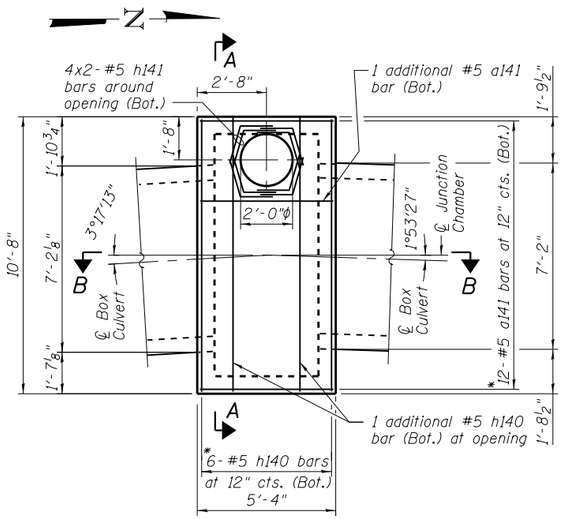

TOP PLAN

*Trim to fit around opening

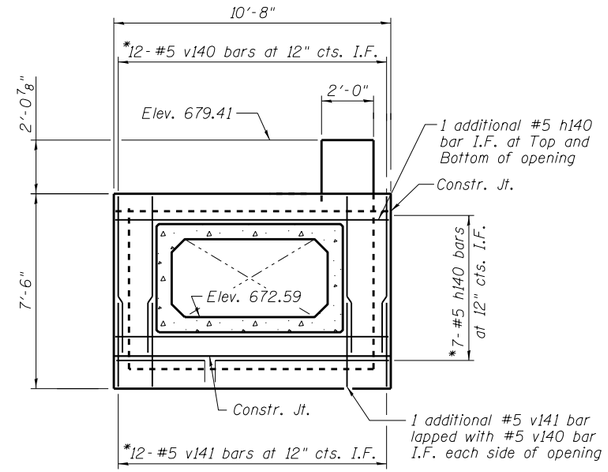

NORTH ELEVATION

(Looking South)

*Trim to fit around opening

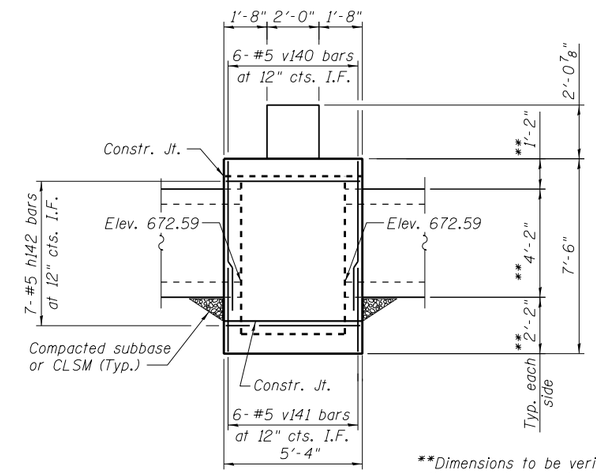

**Dimensions to be verified with precast concrete box culvert manufacturer.

EAST ELEVATION

(Looking West)

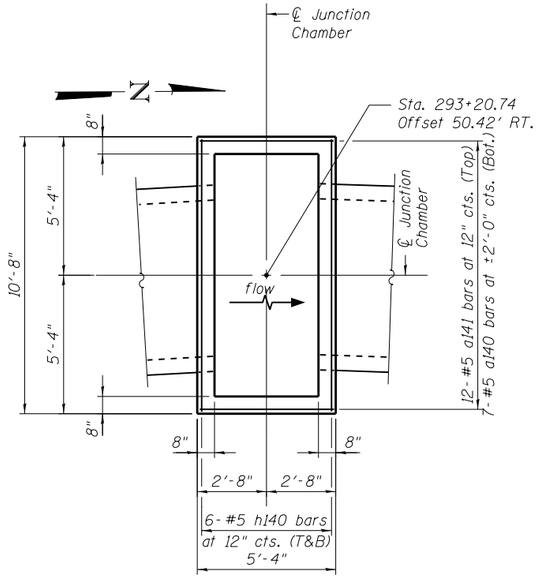

BOTTOM PLAN

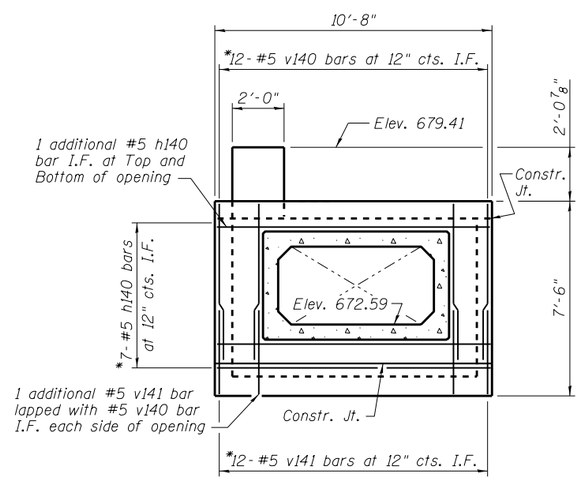

SOUTH ELEVATION

(Looking North)

*Trim to fit around opening

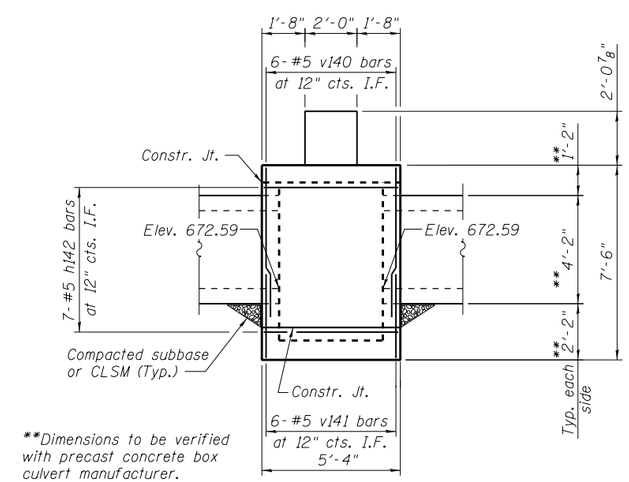

**Dimensions to be verified with precast concrete box culvert manufacturer.

WEST ELEVATION

(Looking East)

URS
100 S. WACKER DR.
SUITE 500
CHICAGO ILL 60606
TEL (312)939-1000
FAX (312)939-4189

FILE NAME = D160M62-SHT-JC4-01.dgn	USER NAME = Anthony.Plutz	DESIGNED - PMH	REVISED -
		CHECKED - MJL	REVISED -
	PLOT SCALE = 5:10.0000 ':' / in.	DRAWN - AMV	REVISED -
	PLOT DATE = 3/12/2013	CHECKED - PMH	REVISED -

STATE OF ILLINOIS
DEPARTMENT OF TRANSPORTATION

JUNCTION CHAMBER NO. 4
PLANS AND ELEVATIONS

SHEET NO. 1 OF 2 SHEETS

F.A.P RTE.	SECTION	COUNTY	TOTAL SHEETS	SHEET NO.
330	103R-5	COOK	778	223
		CONTRACT NO. 60M62		
	ILLINOIS	FED. AID PROJECT		

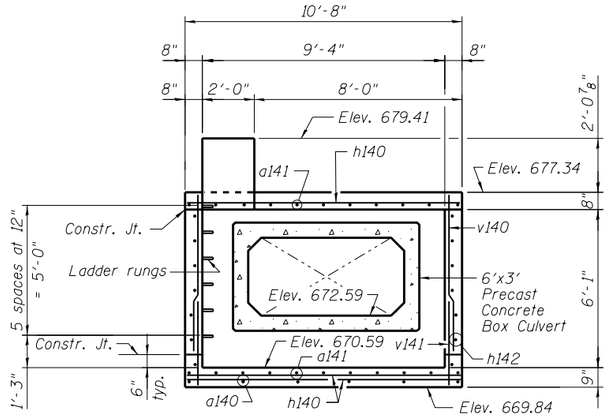

SECTION A-A

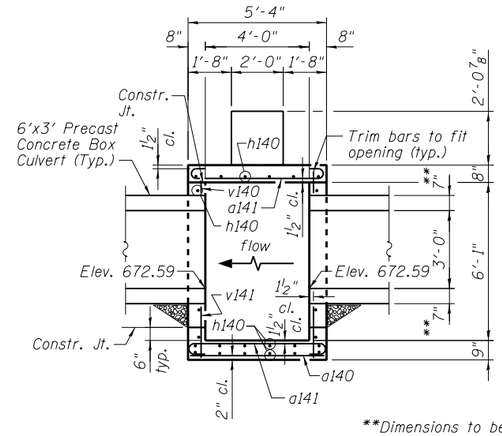

**Dimensions to be verified with precast concrete box culvert manufacturer.

SECTION B-B

Notes:
Bars indicated thus 12x4-#5 etc. indicates 12 lines of bars with 4 lengths per line.
Reinforcement bars shall conform to the requirements of ASTM A 706 Gr 60. See Special Provisions.

BILL OF MATERIAL

Bar	No.	Size	Length	Shape
a140	7	#5	5'-0"	
a141	25	#5	6'-3"	
h140	38	#5	10'-4"	
h141	8	#5	2'-9"	
h142	14	#5	5'-1"	
v140	40	#5	6'-0"	
v141	40	#5	2'-4"	
Structure Excavation			Cu. Yd.	52
Concrete Structures			Cu. Yd.	5.9
Reinforcement Bars			Pound	1,060

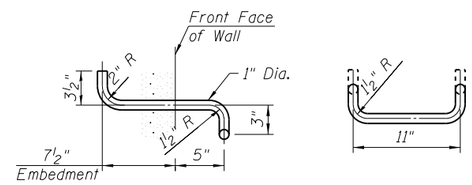

SIDE VIEW FRONT VIEW

TYPE Z LADDER RUNG ELEVATIONS

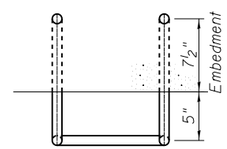

TYPE Z LADDER RUNG PLAN

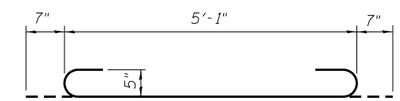

BAR a141

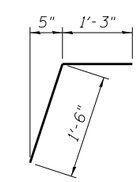

BAR h141

1. The ladder rungs shall be aluminum, conforming to ASTM B361-Alloy 6061-T6 or shall be ductile iron. Aluminum ladder rungs shall receive a heavy coat of bituminous paint or cold applied asphaltic mastic for the portion embedded in concrete. The coating must extend beyond the embedment at least two inches.
2. The contractor may submit an alternative ladder rung detail for Engineer's approval.

Note: All costs for compacted subbase or CLSM, ladder rungs and all other appurtenances required to complete this work shall be included in the item "Concrete Structures."

DESIGN STRESSES

fy = 60,000 psi
f'c = 3,500 psi

URS
100 S. WACKER DR.
SUITE 500
CHICAGO IL 60606
TEL (312)939-1000
FAX (312)939-9498

FILE NAME = D160M62-SHT-JC4-02.dgn	USER NAME = Anthony.Plutz	DESIGNED - PMH	REVISED -	STATE OF ILLINOIS DEPARTMENT OF TRANSPORTATION	JUNCTION CHAMBER NO. 4 DETAILS	F.A.P RTE.	SECTION	COUNTY	TOTAL SHEETS / SHEET NO.
		CHECKED - MJL	REVISED -			330	103R-5	COOK	778 / 224
	PLOT SCALE = 5:10.0000 ':' / in.	DRAWN - AMV	REVISED -			CONTRACT NO. 60M62			
	PLOT DATE = 3/12/2013	CHECKED - PMH	REVISED -		SHEET NO. 2 OF 28 SHEETS	ILLINOIS FED. AID PROJECT			

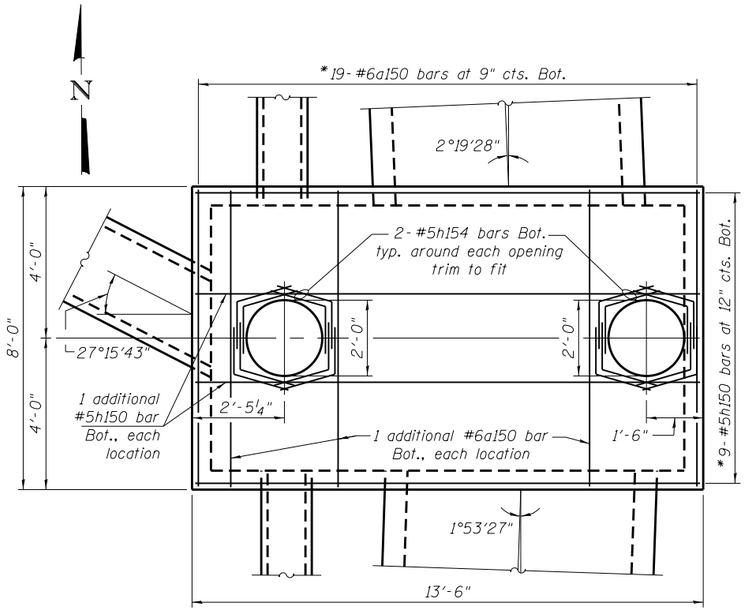

TOP PLAN

*Trim to fit around opening

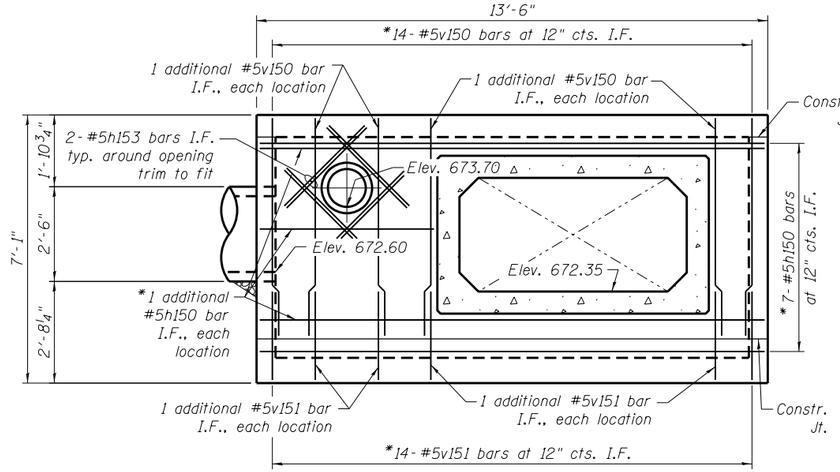

NORTH ELEVATION

(Looking South)

*Trim to fit around opening

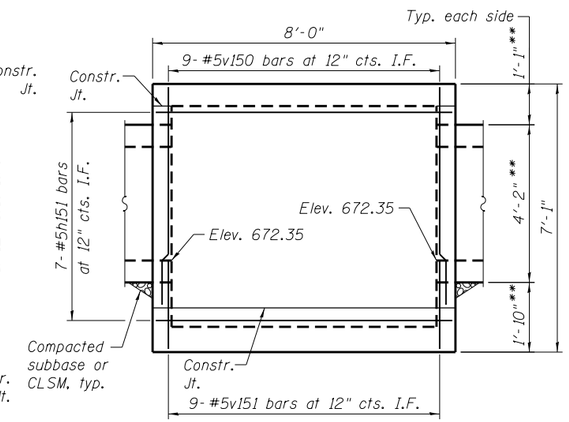

EAST ELEVATION

(Looking West)

*Trim to fit around opening

**Dimensions to be verified with precast concrete box culvert manufacturer.

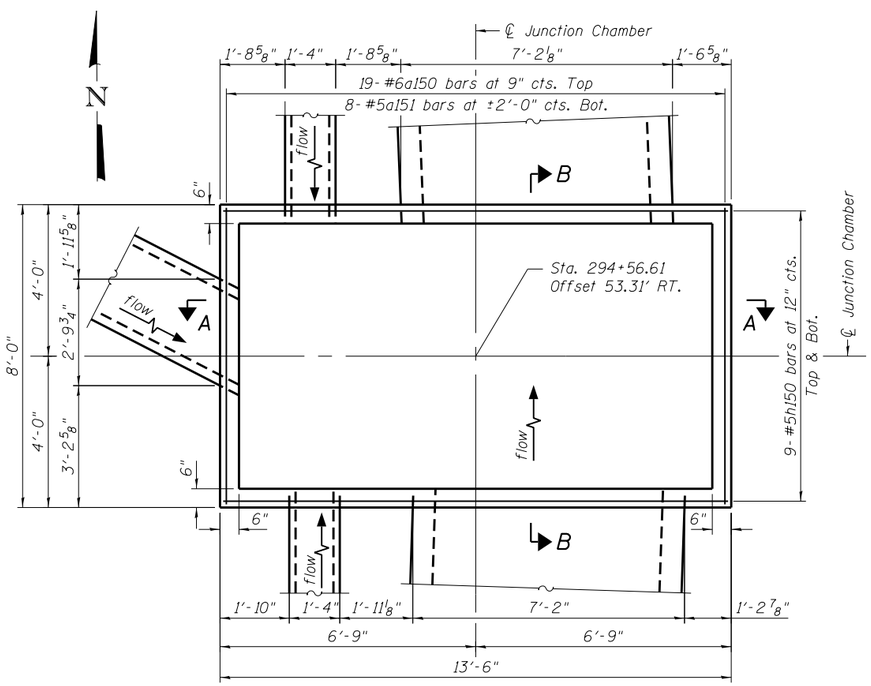

BOTTOM PLAN

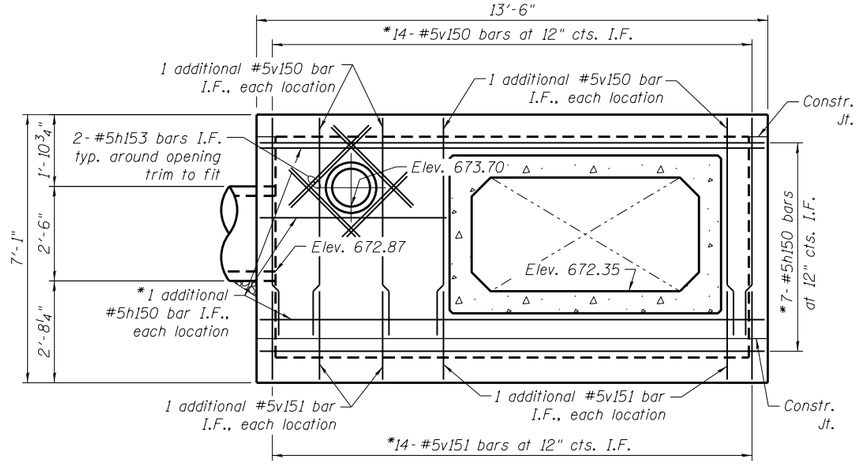

SOUTH ELEVATION

(Looking North)

*Trim to fit around opening

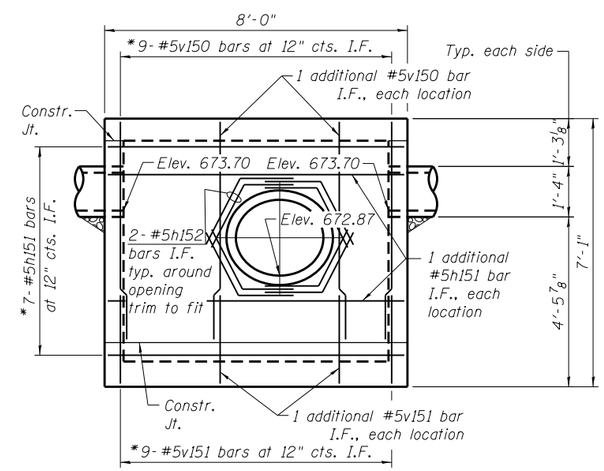

WEST ELEVATION

(Looking East)

*Trim to fit around opening

URS
100 S. WACKER DR.
SUITE 500
CHICAGO IL 60606
TEL (312)939-1000
FAX (312)939-4958

FILE NAME = D160M62-SHT-JC5-01.dgn	USER NAME = Anthony.Plutz	DESIGNED - PMH	REVISED -	STATE OF ILLINOIS DEPARTMENT OF TRANSPORTATION	JUNCTION CHAMBER NO. 5 PLANS AND ELEVATIONS	F.A.P RTE.	SECTION	COUNTY	TOTAL SHEETS	SHEET NO.
		CHECKED - MJL	REVISED -			330	103R-5	COOK	778	225
	PLOT SCALE = 4:0 ':' / in.	DRAWN - PMH	REVISED -					CONTRACT NO. 60M62		
	PLOT DATE = 3/12/2013	CHECKED - MJL	REVISED -		SHEET NO. 1 OF 2 SHEETS		ILLINOIS	FED. AID PROJECT		

Notes:
Bars indicated thus 12x4-#5 etc. indicates 12 lines of bars with 4 lengths per line.
Reinforcement bars shall conform to the requirements of ASTM A 706 Gr 60. See Special Provisions.

BILL OF MATERIAL

Bar	No.	Size	Length	Shape
a150	41	#6	9'-1"	
a151	8	#5	7'-8"	
h150	49	#5	13'-3"	
h151	16	#5	7'-9"	
h152	8	#5	3'-9"	
h153	16	#5	3'-0"	
h154	16	#5	2'-9"	
v150	56	#5	5'-8"	
v151	56	#5	2'-3"	
Structure Excavation			Cu. Yd.	159
Concrete Structures			Cu. Yd.	7.8
Reinforcement Bars			Pound	2,020

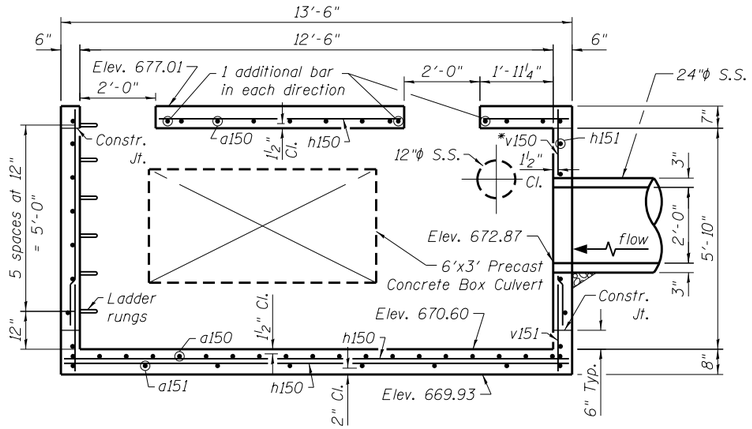

SECTION A-A

* Trim to fit around opening

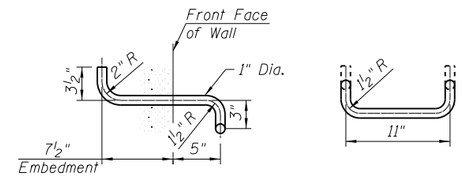

SIDE VIEW

FRONT VIEW

TYPE Z LADDER RUNG ELEVATIONS

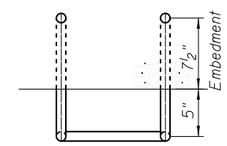

TYPE Z LADDER RUNG PLAN

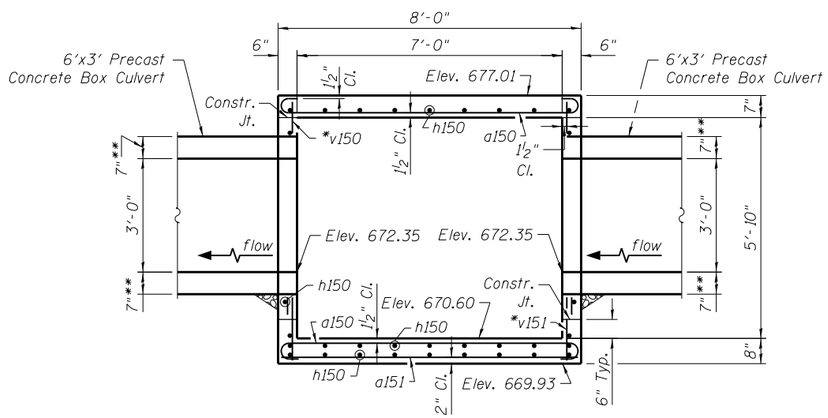

SECTION B-B

* Trim to fit around opening
** Dimensions to be verified with precast concrete box culvert manufacturer.

1. The ladder rungs shall be aluminum, conforming to ASTM B361-Alloy 6061-T6 or shall be ductile iron. Aluminum ladder rungs shall receive a heavy coat of bituminous paint or cold applied asphaltic mastic for the portion embedded in concrete. The coating must extend beyond the embedment at least two inches.
2. The contractor may submit an alternative ladder rung detail for Engineer's approval.

Note: All costs for compacted subbase or CLSM, ladder rungs and all other appurtenances required to complete this work shall be included in the item "Concrete Structures."

DESIGN STRESSES

fy = 60,000 psi
f'c = 3,500 psi

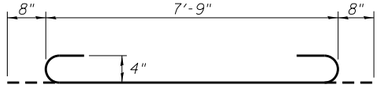

BAR a150

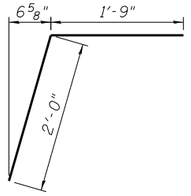

BAR h152

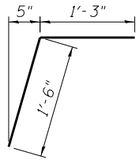

BAR h154

URS
100 S. WACKER DR.
SUITE 500
CHICAGO IL 60606
TEL (312)939-1000
FAX (312)939-9498

FILE NAME = D160M62-SHT-JC5-02.dgn	USER NAME = Anthony.Plutz	DESIGNED - PMH	REVISED -	STATE OF ILLINOIS DEPARTMENT OF TRANSPORTATION	JUNCTION CHAMBER NO. 5 DETAILS	F.A.P RTE. 330	SECTION 103R-5	COUNTY COOK	TOTAL SHEETS 778	SHEET NO. 226
		CHECKED - MJL	REVISED -					CONTRACT NO. 60M62		
	PLOT SCALE = 40 ':' / in.	DRAWN - PMH	REVISED -							
	PLOT DATE = 3/12/2013	CHECKED - MJL	REVISED -		SHEET NO. 2 OF 2 SHEETS		ILLINOIS	FED. AID PROJECT		

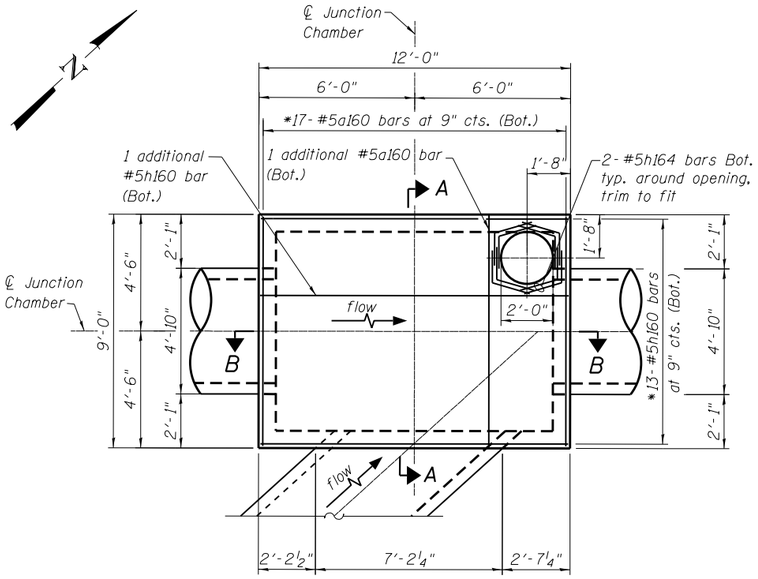

TOP PLAN

*Trim to fit around opening

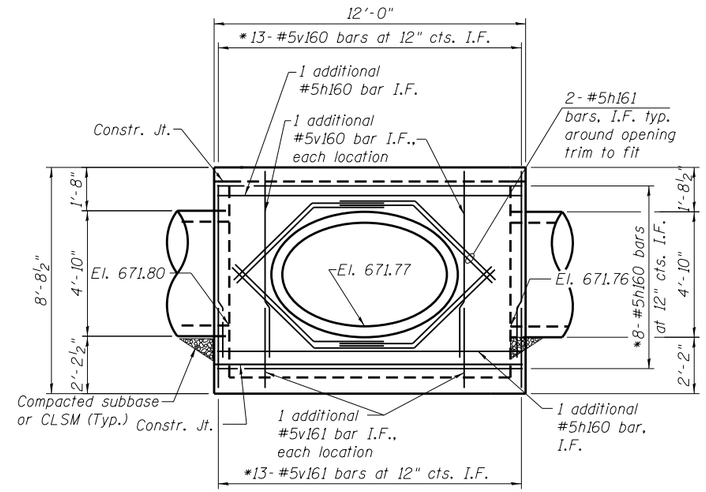

SOUTHEAST ELEVATION

(Looking Northwest)

*Trim to fit around opening

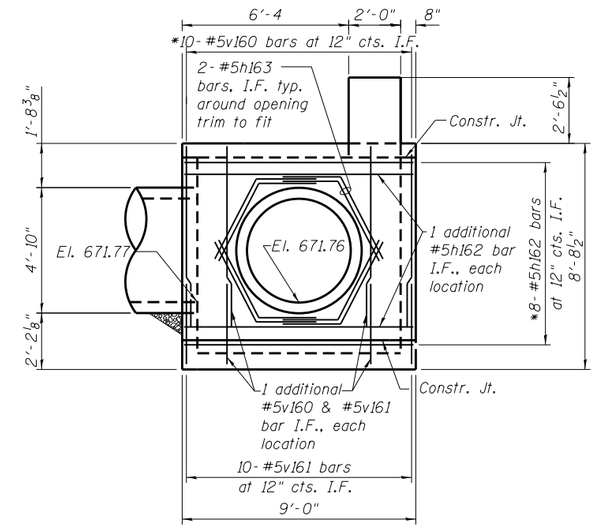

NORTHEAST ELEVATION

(Looking Southwest)

*Trim to fit around opening

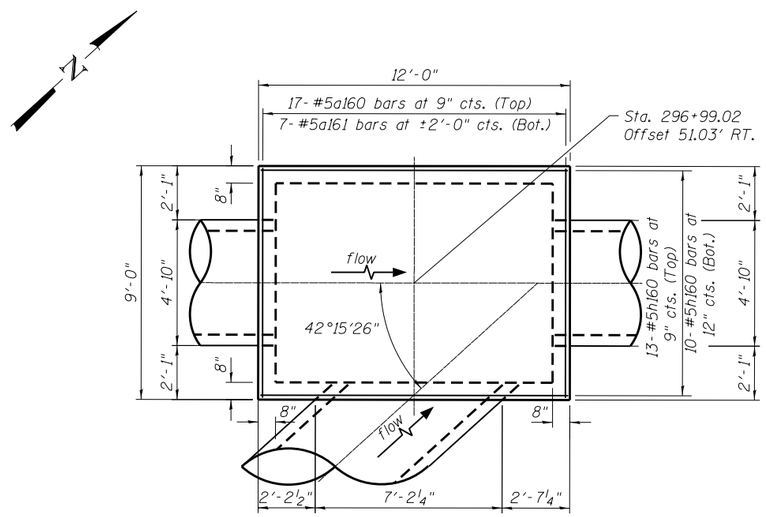

BOTTOM PLAN

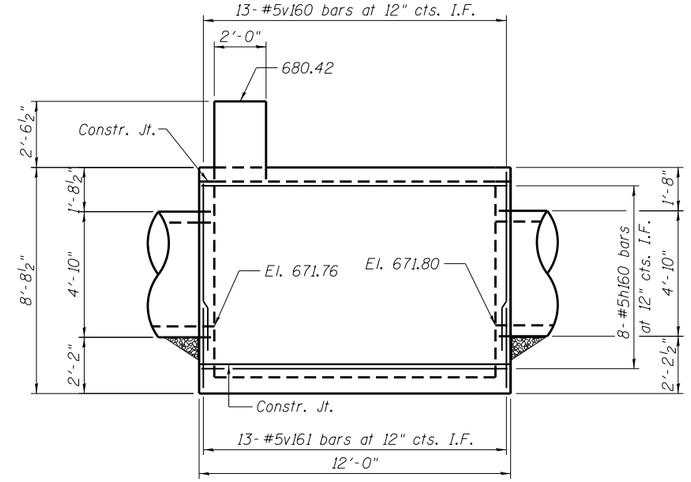

NORTHWEST ELEVATION

(Looking Southeast)

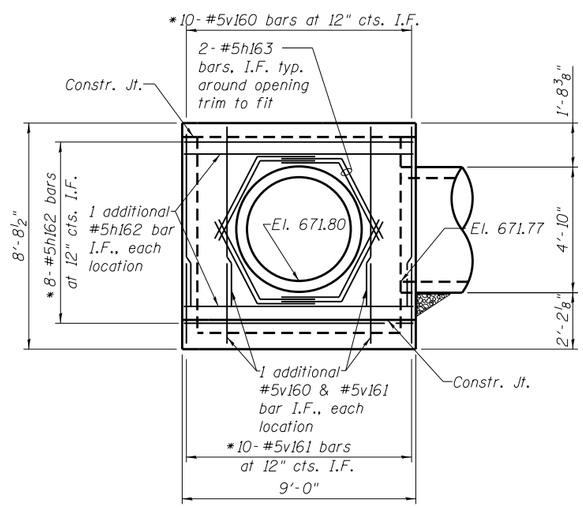

SOUTHWEST ELEVATION

(Looking Northeast)

*Trim to fit around opening

URS
100 S. WACKER DR.
SUITE 500
CHICAGO IL 60606
TEL (312)-939-1000
FAX (312)-939-4498

FILE NAME = D160M62-SHT-JC6-01.dgn	USER NAME = Anthony.Plutz	DESIGNED -	REVISED -
		CHECKED -	REVISED -
	PLOT SCALE = 5:10 ':' / in.	DRAWN -	REVISED -
	PLOT DATE = 3/12/2013	CHECKED -	REVISED -

STATE OF ILLINOIS
DEPARTMENT OF TRANSPORTATION

JUNCTION CHAMBER NO. 6
PLANS AND ELEVATIONS

SHEET NO. 1 OF 2 SHEETS

F.A.P RTE.	SECTION	COUNTY	TOTAL SHEETS	SHEET NO.
330	103R-5	COOK	778	227
		CONTRACT NO. 60M62		
		ILLINOIS FED. AID PROJECT		

Notes:
Bars indicated thus 12x4-#5 etc. indicates 12 lines of bars with 4 lengths per line.
Reinforcement bars shall conform to the requirements of ASTM A 706 Gr 60. See Special Provisions.

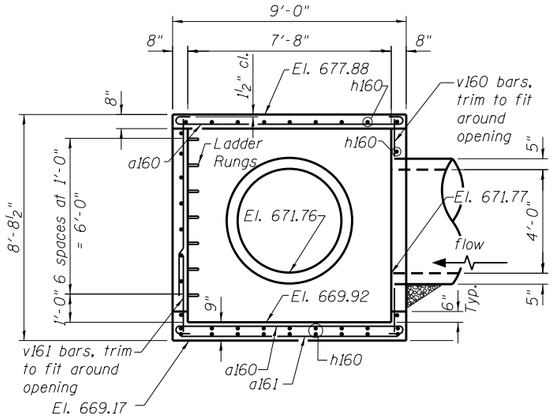

SECTION A-A

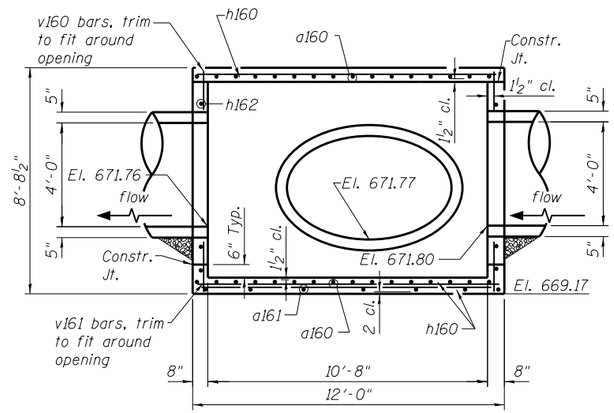

SECTION B-B

BILL OF MATERIAL

Bar	No.	Size	Length	Shape
a160	35	#5	9'-11"	
a161	7	#5	8'-8"	
h160	54	#5	11'-8"	
h161	8	#5	6'-11"	
h162	20	#5	8'-9"	
h163	16	#5	5'-8"	
h164	8	#5	2'-9"	
v160	52	#5	7'-2"	
v161	52	#5	2'-4"	
Structure Excavation			Cu. Yd.	99
Concrete Structures			Cu. Yd.	11.1
Reinforcement Bars			Pound	1,960

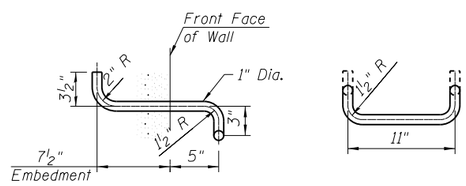

SIDE VIEW FRONT VIEW

TYPE Z LADDER RUNG ELEVATIONS

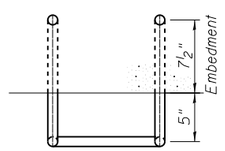

TYPE Z LADDER RUNG PLAN

1. The ladder rungs shall be aluminum, conforming to ASTM B361-Alloy 6061-T6 or shall be ductile iron. Aluminum ladder rungs shall receive a heavy coat of bituminous paint or cold applied asphaltic mastic for the portion embedded in concrete. The coating must extend beyond the embedment at least two inches.
2. The contractor may submit an alternative ladder rung detail for Engineer's approval.

Note: All costs for compacted subbase or CLSM, ladder rungs and all other appurtenances required to complete this work shall be included in the item "Concrete Structures."

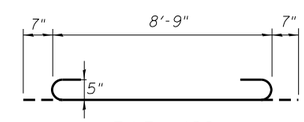

BAR a160

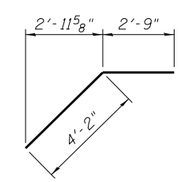

BAR h161

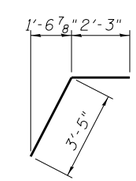

BAR h163

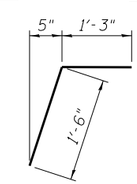

BAR h164

DESIGN STRESSES

fy = 60,000 psi
f'c = 3,500 psi

URS
100 S. WACKER DR.
SUITE 500
CHICAGO IL 60606
TEL (312)939-1000
FAX (312)939-4189

FILE NAME = D160M62-SHT-JC6-02.dgn	USER NAME = Anthony.Plutz	DESIGNED - MJL	REVISED -
		CHECKED - PMH	REVISED -
	PLOT SCALE = 5:10 ':' / in.	DRAWN - MJL	REVISED -
	PLOT DATE = 3/12/2013	CHECKED - PMH	REVISED -

STATE OF ILLINOIS
DEPARTMENT OF TRANSPORTATION

JUNCTION CHAMBER NO. 6
DETAILS
SHEET NO. 2 OF 2 SHEETS

F.A.P RTE.	SECTION	COUNTY	TOTAL SHEETS	SHEET NO.
330	103R-5	COOK	778	228
		CONTRACT NO. 60M62		
		ILLINOIS FED. AID PROJECT		

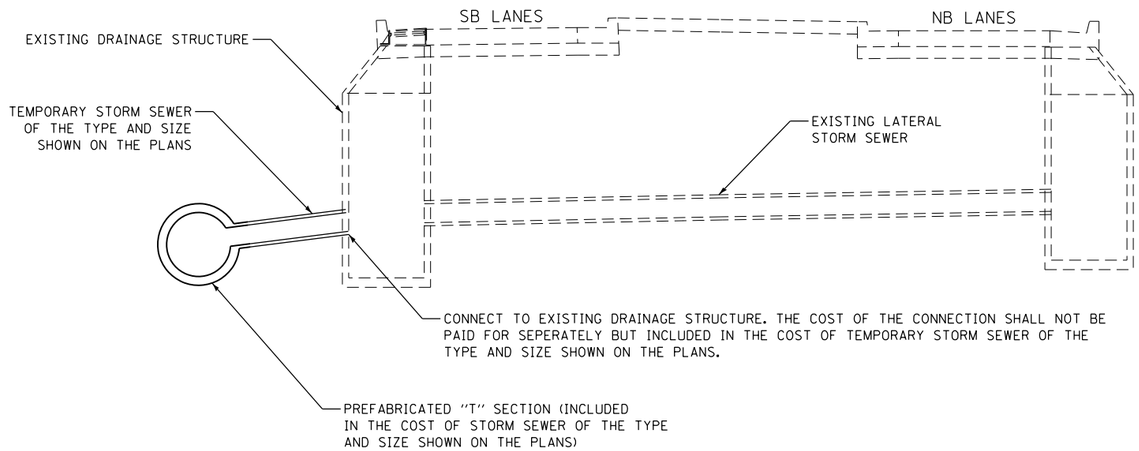

TEMPORARY STORM SEWER CONNECTION DETAILS

NTS

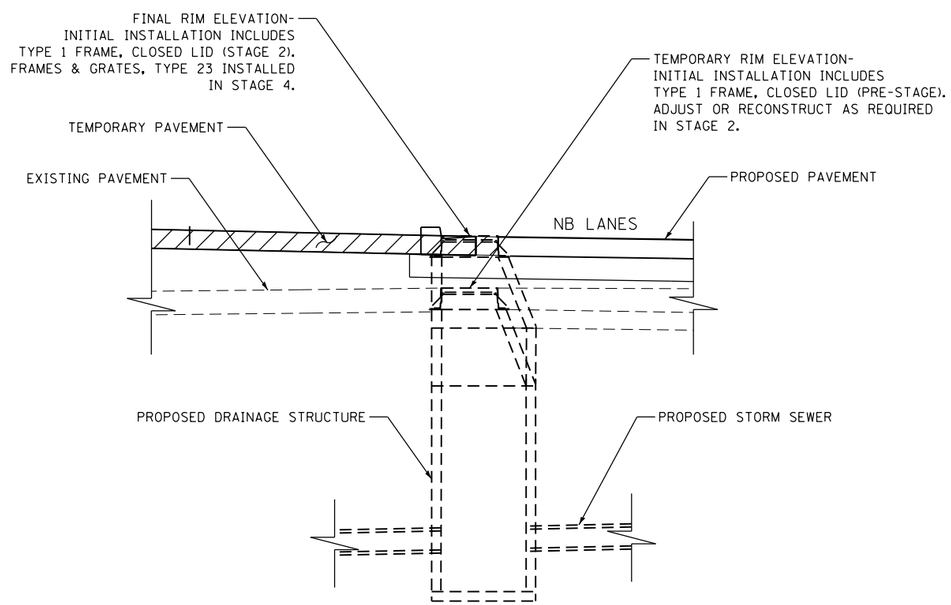

NB EDGE OF MEDIAN DRAINAGE STRUCTURE ADJUSTMENT/RECONSTRUCTION DETAIL

NTS

URS
100 S. WACKER DR.
SUITE 500
CHICAGO IL 60606
TEL (312)939-1000
FAX (312)939-4198

FILE NAME = D160M62-SHT-DRAINDET01.dgn	USER NAME = Anthony.Plutz	DESIGNED -	REVISED -	STATE OF ILLINOIS DEPARTMENT OF TRANSPORTATION	STORM SEWER DRAINAGE DETAILS	F.A.P RTE.	SECTION	COUNTY	TOTAL SHEETS	SHEET NO.
		DRAWN - NFT	REVISED -			330	103R-5	COOK	778	229
	PLOT SCALE = 20.0000 ' / in.	CHECKED - ---	REVISED -			DD-01		CONTRACT NO. 60M62		
SHT_PLAN	PLOT DATE = 3/12/2013	DATE - 03/13/13	REVISED -		SCALE: NONE SHEET 1 OF 1 SHEETS STA. TO STA.	ILLINOIS	FED. AID PROJECT			

WATER MAIN SCHEDULE

SHEET	STA	WATER MAIN 8" - DIP	WATER MAIN 12" -DIP	FHYD	12" x 6" TEE	12" x 8" TEE	8" GATE VALVE IN 4' VAULT	12" GATE VALVE IN 4' VAULT	8" 45° BEND	12" 45° BEND	12" 90° BEND	FHYD REMOVAL/ RELOCATION	PRESSURE CONNECTION	CONTROLLED LOW STENGTH MATERIAL	20" CASING	FILLING VAULT
		(LF)	(LF)	(EACH)	(EACH)	(EACH)	(EACH)	(EACH)	(EACH)	(EACH)	(EACH)	(EACH)	(EACH)	(CYD)	(LF)	(EACH)
WT-02	320+82		50					1								
WT-02	320+83			1												
WT-02	320+88				1											
WT-02	321+00									1				13.5		2
WT-02	321+23															
WT-02	324+72		220										1			
WT-02	324+81			1	1											
WT-02	324+88										2				118.5	
WT-02	325+41							1								
WT-04	625+21		900								1			26		
WT-04	653+50				1							1				
WT-05	656+50				1							1				
WT-05	657+66								2							
WT-05	657+69	10				1	1									1
WT-05	658+80							1								1
WT-05	658+92								2							
WT-05	658+95	10				1	1									
WT-05	659+39							1								1
WT-05	659+50				1							1				
WT-06	661+12									2						
TOTAL		**20**	**1170**	**2**	**5**	**2**	**2**	**4**	**4**	**3**	**3**	**3**	**1**	**39.5**	**118.5**	**5**

WATER MAIN SUMMARY

PAY CODE	DESCRIPTION	UNIT	QUANTITY
56103100	DUCTILE IRON WATER MAIN 8"	LFT	20
56103300	DUCTILE IRON WATER MAIN 12"	LFT	1170
	GATE VALVE 8" WITH VAULT 4' DIAMETER	EA	2
	GATE VALVE 12" WITH VAULT 4' DIAMETER	EA	4
56400820	FIRE HYDRANT WITH 6" AUX VALVE & VALVE BOX	EA	2
60500405	FILLING VAULT	EA	5
X5610651	CONTROLLED LOW STRENGTH MATERIAL (FLOWABLE FILL)	CYD	40
Z0067700	STEEL CASING 20"	LFT	119
Z0045100	PRESSURE CONNECTION	EA	1
56400400	FIRE HYDRANT TO BE RELOCATED	EA	3

WATER MAIN LEGEND

- PROPOSED WATER MAIN
- EXISTING WATER MAIN
- WATER MAIN TO BE ABANDONED
- EXISTING HYDRANT
- PROPOSED HYDRANT
- EXISTING WATER VAULT
- PROPOSED WATER VAULT
- EXISTING VALVE BOX
- EXISTING MANHOLE
- PROPOSED MANHOLE
- EXISTING CATCH BASIN
- PROPOSED CATCH BASIN
- PROPOSED INLET
- PROPOSED STORM SEWER
- EXISTING STORM SEWER
- EXISTING SANITARY SEWER
- PROPOSED UNDERDRAIN
- UTILITY TO BE REMOVED
- CULVERT

WATER MAIN NOTES:

1. THE CONTRACTOR SHALL MAKE CONNECTIONS TO EXISTING WATER MAINS UTILIZING A MJ SLEEVE WITH RESTRAINED JOINTS UNLESS NOTED OTHERWISE.
2. PRESSURE TESTING AND DISINFECTION OF NEW WATER MAINS SHALL BE IN ACCORDANCE WITH THE CONTRACT DOCUMENTS. EXISTING WATER MAINS SHALL REMAIN IN SERVICE UNTIL NEW WATER MAINS PASS ALL TESTS AND APPROVAL IS GIVEN BY THE ENGINEER AND THE VILLAGE OF ORLAND PARK.
3. NEW WATERMAIN SHALL BE ENCASED IN POLYETHYLENE WRAP IN ACCORDANCE WITH THE CONTRACT DOCUMENTS.
4. WATER MAINS AND SERVICES SHALL HAVE A MINIMUM BURY DEPTH OF FIVE (5) FEET AND SIX (6) INCHES BELOW FINISHED GROUND SURFACE.
5. EXISTING WATER MAINS TO BE ABANDONED SHALL BE FILLED WITH CONTROLLED LOW STRENGTH MATERIAL (CLSM).
6. THE CONTRACTOR SHALL REMOVE ALL VALVES, CASTINGS, OR HYDRANTS FROM THE WATER MAINS TO BE ABANDONED. EXISTING BASINS OR VAULTS SHALL BE ABANDONED IN PLACE AND FILLED WITH SAND. WHEN REQUESTED BY THE VILLAGE OF ORLAND PARK, THE CONTRACTOR SHALL SALVAGE AND DELIVER TO THE VILLAGE ANY EXISTING VALVES, CASTINGS, OR HYDRANTS FROM THE ADANDONED WATER MAIN. ALL OTHER PIPE AND APPURTENANCES REMOVED FROM THE ABANDONED WATER MAIN SHALL BECOME THE PROPERTY OF THE CONTRACTOR.
7. ALL WATER MAINS SHALL BE LAID AT LEAST TEN (10) FEET HORIZONTALLY FROM ANY EXISTING OR PROPOSED SEWER. THE DISTANCE SHALL BE MEASURED FROM THE OUTSIDE OF PIPE TO OUTSIDE OF PIPE. ALL SEWERS CROSSING WATER MAINS SHALL BE LAID TO PROVIDE A MINIMUM VERTICAL CLEARANCE OF 18-INCHES BETWEEN THE OUTSIDE OF THE WATER MAIN AND THE OUTSIDE OF THE SEWER.
8. THE LOCATIONS OF EXISTING UNDERGROUND UTILITIES, SUCH AS WATER MAINS, SEWERS, GAS LINES, PIPELINES, ETC. SHOWN ON THE PLANS HAVE BEEN DETERMINED FROM THE BEST AVAILABLE INFORMATION AND ARE GIVEN FOR THE CONVENIENCE OF THE CONTRACTOR. HOWEVER, THE ENGINEER AND THE OWNER DO NOT ASSUME RESPONSIBILITY IN THE EVENT THAT DURING CONSTRUCTION, UTILITIES OTHER THAN THOSE SHOWN MAY BE ENCOUNTERED, AND THAT THE ACTUAL LOCATION OF THOSE WHICH ARE SHOWN MAY BE DIFFERENT FROM THE LOCATION AS SHOWN ON THE PLANS. IT SHALL BE THE CONTRACTOR'S RESPONSIBILITY TO CONTACT ALL UTILITY COMPANIES AND LOCATE THEIR FACILITIES PRIOR TO ANY WORK.
9. RECORD DRAWINGS FOR THE NEW WATER MAINS SHALL BE PREPARED BY THE CONTRACTOR AND SUBMITTED TO THE VILLAGE OF ORLAND PARK UPON THE PROJECT COMPLETION. ANY VARIATIONS FROM THE CONTRACT DOCUMENTS SHALL BE INDICATED ON THE RECORD DRAWINGS.
10. THE CONTRACTOR SHALL BE RESPONSIBLE FOR THE PROTECTION OF ALL UNDERGROUND OR SURFACE UTILITIES EVEN THOUGH THEY MAY NOT BE SHOWN ON THE PLANS. ANY UTILITY THAT IS DAMAGED DURING CONSTRUCTION SHALL BE REPAIRED OR REPLACED TO THE SATISFACTION OF THE OWNER AND OPERATOR OF THE DAMAGED UTILITY. THIS WORK SHALL BE AT THE CONTRACTOR'S EXPENSE.
11. IT IS THE CONTRACTOR'S RESPONSIBILITY TO ASCERTAIN EXISTING FIELD CONDITIONS BEFORE COMMENCEMENT OF WORK BEGINS. WHERE NEW WORK MEETS EXISTING FEATURES TO REMAIN, FIELD CHECK ALL DIMENSIONS AND ELEVATIONS BEFORE PROCEEDING WITH CONSTRUCTION.
12. SURFACE FEATURES THAT ARE DISTURBED DUE TO THE CONSTRUCTION OF WATER MAINS, WHICH ARE NOT INCLUDED AS PART OF THE ROADWAY IMPROVEMENTS, SHALL BE RESTORED AND BE CONSIDERED INCIDENTAL TO THE WATER MAIN WORK. RESTORATION THAT IS INCIDENTAL TO THE WATER MAIN WORK SHALL BE INCLUDED IN THE COSTS FOR THE WATER MAIN WORK WITH NO ADDITIONAL COMPENSATION ALLOWED. RESTORATION OF SURFACE FEATURES SHALL INCLUDE, BUT NOT BE LIMITED TO, SODDING, SEEDING, REMOVAL AND RESTORATION OF PAVEMENT, REMOVAL AND RESTORATION OF SIDEWALK, REMOAL AND RESTORATION OF CURB AND GUTTER, AND ANY OTHER ITEM THAT MUST BE DISTURBED TO INSTALL WATER MAIN AS INDICATED IN THE PROJECT DOCUMENTS. RESTORATION WORK ITEMS THAT ARE CONSIDERED INCIDENTAL TO WATER MAIN WORK SHALL BE PERFORMED PER THE REQUIREMENTS OF PROJECT DOCUMENTS.
13. FLOWABLE FILL: QUANTITY IS FOR ABANDONED PIPE FILLING ONLY. ANY FLOWABLE FILL USED IN ABANDONING VAULTS WILL BE CONSIDERED PART OF THAT PAY ITEM.
14. THE CONTRATOR SHALL VERIFY PROPOSED SURFACE GRADES FOR FINAL PARKWAY IMPROVEMENTS PRIOR TO THE INSTALLATION OF WATER MAIN IN ORDER TO MAINTAIN MINIMUM COVER REQUIREMENTS AT PROJECT COMPLETION.
15. CONTRACTOR SHALL VERIFY CLEARANCES FROM SIDEWALKS AND PAVEMENT FOR FIRE HYDRANTS PRIOR TO INSTALLATION. FIRE HYDRANTS MUST HAVE 2' OF CLEARANCE FROM FACE OF CURBS AND A MINIMUM OF 6" FROM SIDEWALK TO CLOSEST PART. FIRE HYDRANTS MAY BE PLACED IMMEDIATELY AGAINST THE ROW WHERE PRACTICAL.

URS
100 S. WACKER DR.
SUITE 500
CHICAGO IL 60606
TEL (312)-939-1000
FAX (312)-939-9498

(1) CONNECTION TO EXISTING 12"
WATER MAIN
12" GATE VALVE IN 4' Ø VAULT
STA 320+82, 70.5' RT
N 1812883.68
E 1115368.39
INSTALL 50' OF 12" D.I.P.

(2) 12"x6" TEE, MJ
STA 320+88, 62.0' RT
N 1812890.19
E 1115360.12
INSTALL 6" PIPE AND FITTINGS AS NECESSARY
HYDRANT WITH AUXILARY VALVE AND BOX
STA 320+83, 58.5' RT
N 1812885.26
E 1115356.48

(3) 12"-45° BEND, MJ
STA 321+00, 47.0' RT
N 1812901.67
E 1115345.29

(4) FILLING VAULT (2 EACH)

(5) CONNECTION TO EXISTING 12" WATER MAIN
STA 321+23, 47.0' RT
N 1812924.96
E 1115345.16

(6) PRESSURE CONNECTION (12"X12"X12")
STA 324+72, 67.0' RT
N 1813273.34
E 1115366.91
INSTALL 220' OF 12" D.I.P.

(7) 12"x6" TEE, MJ
STA 324+81, 67.0' RT
N 1813282.85
E 1115367.44
INSTALL 6" PIPE AND FITTINGS AS NECESSARY
HYDRANT WITH AUXILARY VALVE AND BOX
STA 324+81, 71.0' RT
N 1813282.81
E 1115371.63

(8) 12"-90° BEND, MJ
STA 324+88, 67.0' RT
N 1813289.78
E 1115367.82

(9) 118.5' OF 20" STEEL CASING
STA 324+88
66.0' RT TO 52.5' LT

(10) 12"-90° BEND, MJ
STA 324+88, 84.0' LT
N 1813290.61
E 1115216.02

(11) CONNECTION TO EXISTING 12" WATER MAIN
12" GATE VALVE IN 4' Ø VAULT
STA 325+41, 86.0' LT
N 1813343.70
E 1115214.26

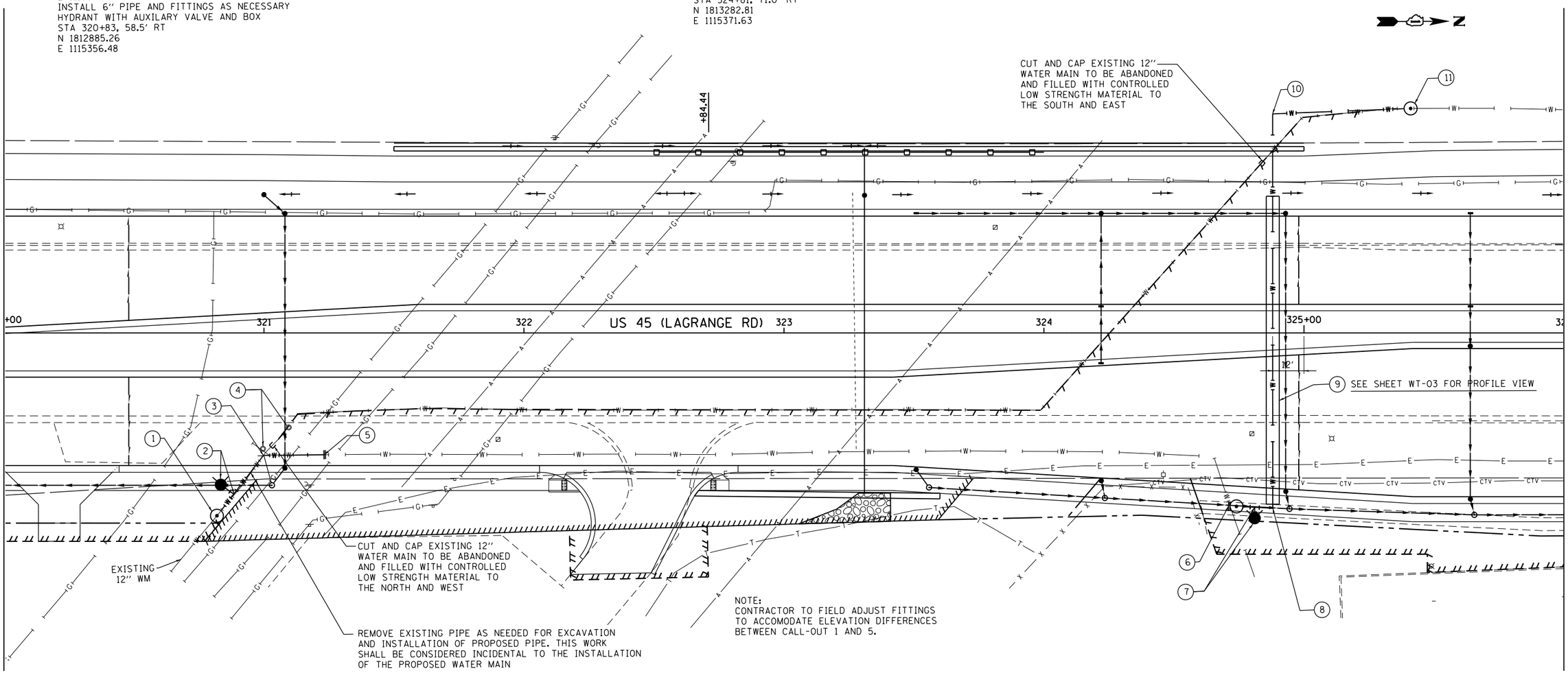

NOTE:
CONTRACTOR TO FIELD ADJUST FITTINGS
TO ACCOMODATE ELEVATION DIFFERENCES
BETWEEN CALL-OUT 1 AND 5.

URS
100 S. WACKER DR.
SUITE 500
CHICAGO IL 60606
TEL (312)939-1000
FAX (312)939-9498

FILE NAME = D160M62-SHT-WATER02.dgn	USER NAME = Frank.Stallone	DESIGNED - MDB	REVISED -
		DRAWN - MDB	REVISED -
	PLOT SCALE = 40.000000 ' / in.	CHECKED - TDW	REVISED -
SHT_PLAN	PLOT DATE = 3/15/2013	DATE - 03/13/13	REVISED -

STATE OF ILLINOIS
DEPARTMENT OF TRANSPORTATION

WATER MAIN – PROPOSED PLAN
US 45 (LAGRANGE ROAD)

SCALE: 1"=40' | SHEET 2 OF 8 SHEETS | STA. 320+00.00 TO STA. 326+00.00

F.A.P RTE.	SECTION	COUNTY	TOTAL SHEETS	SHEET NO.
330	103R-5	COOK	778	231
	WT-02	CONTRACT NO. 60M62		
		ILLINOIS FED. AID PROJECT		

SEE SHEET WT-02 FOR NOTES (6) TO (11)

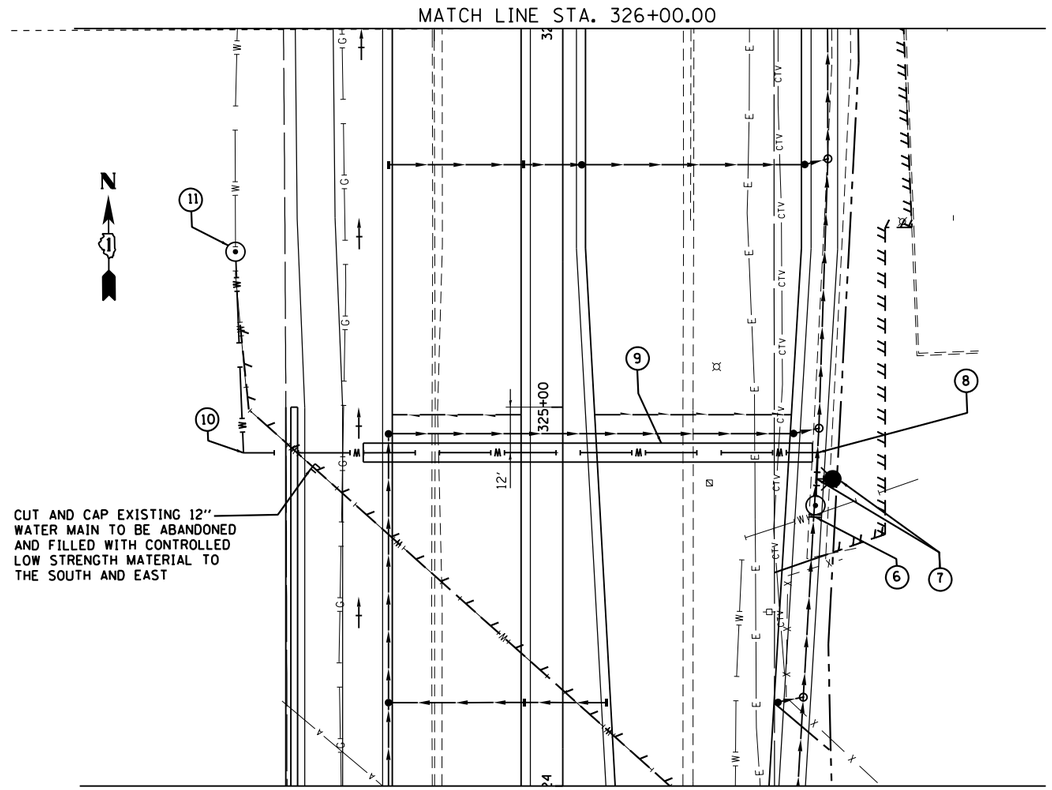

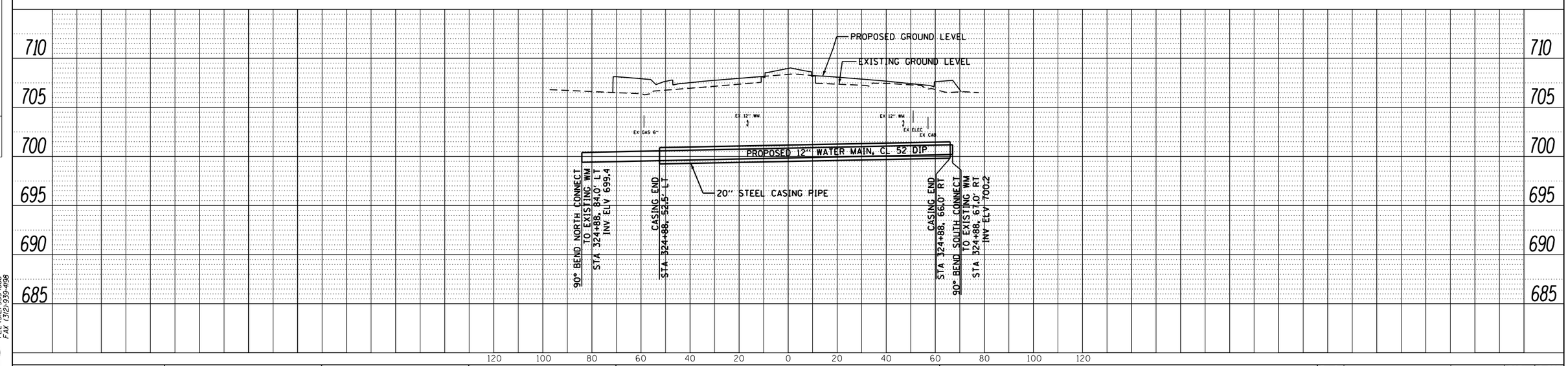

PLAN	BY	DATE
SURVEYED		
PLOTTED		
ALIGNMENT CHECKED		
RT. OF WAY CHECKED		
CADD FILE NAME		
NOTE BOOK NO.		

PROFILE	BY	DATE
SURVEYED		
PLOTTED		
GRADES CHECKED		
B.M. NOTED		
STRUCTURE NOTATIONS CHKD		
NOTE BOOK NO.		

URS
100 S. WACKER DR.
SUITE 1500
CHICAGO, ILLINOIS 60606
TEL (312)939-1000
FAX (312)939-4198

FILE NAME = D160M62-SHT-WATER03.dgn	USER NAME = Frank.Stallone	DESIGNED - MDB	REVISED -
		DRAWN - MDB	REVISED -
	PLOT SCALE = 40.000000 ' / in.	CHECKED - TDW	REVISED -
SHT_PLNPROF URBAN	PLOT DATE = 3/15/2013	DATE - 03/13/13	REVISED -

STATE OF ILLINOIS
DEPARTMENT OF TRANSPORTATION

WATER MAIN – PROPOSED PLAN AND PROFILE
US 45 (LAGRANGE ROAD)

SCALE:1"=40'H;1"=5'V | SHEET 3 OF 8 SHEETS | STA. 324+00.00 TO STA. 326+00.00

F.A.P RTE.	SECTION	COUNTY	TOTAL SHEETS	SHEET NO.
330	103R-5	COOK	778	232
	WT-03	CONTRACT NO. 60M62		
		ILLINOIS FED. AID PROJECT		

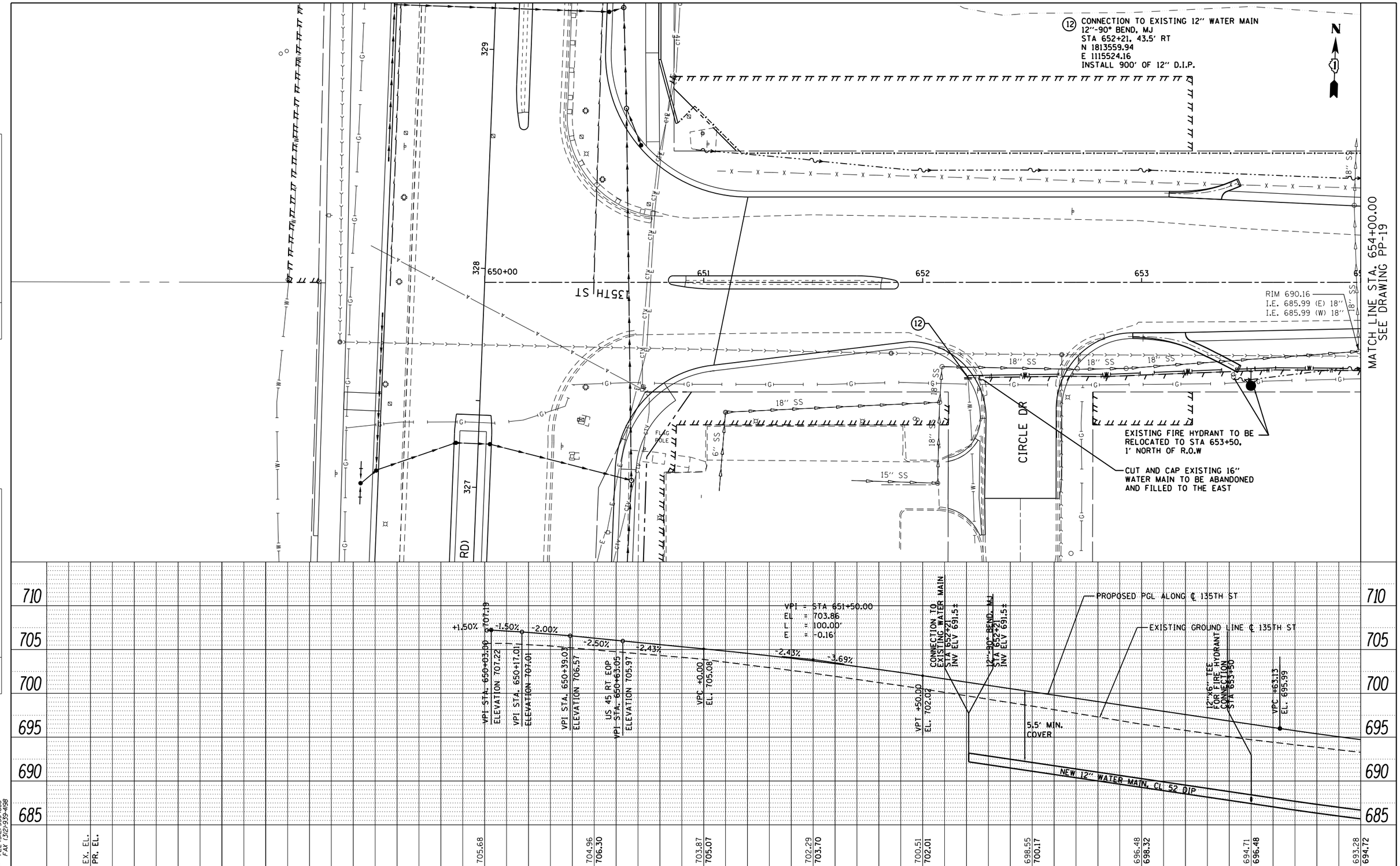

PLAN	BY	DATE
SURVEYED		
PLOTTED		
ALIGNMENT CHECKED		
RT. OF WAY CHECKED		
CADD FILE NAME		
NOTE BOOK NO.		

PROFILE	BY	DATE
SURVEYED		
PLOTTED		
GRADES CHECKED		
BM. NOTED		
STRUCTURE NOTATNS CHKD		
NOTE BOOK NO.		

URS
100 S. WACKER DR.
SUITE 500
CHICAGO, IL 60606
TEL (312)939-1000
FAX (312)939-4198

FILE NAME = D160M62-SHT-WATER04.dgn	USER NAME = Frank_Stallone	DESIGNED - JTF	REVISED -
		DRAWN - JTF	REVISED -
	PLOT SCALE = 40.000000 ' / in.	CHECKED - MJT	REVISED -
SHT_PLNPROF URBAN	PLOT DATE = 3/15/2013	DATE - 03/13/13	REVISED -

STATE OF ILLINOIS
DEPARTMENT OF TRANSPORTATION

WATER MAIN - PROPOSED PLAN & PROFILE
135TH STREET

SCALE:1"=40'H:1"=5'V | SHEET 4 OF 8 SHEETS | STA. 650+00.00 TO STA. 654+00.00

F.A.P RTE.	SECTION	COUNTY	TOTAL SHEETS	SHEET NO.
330	103R-5	COOK	778	233
	WT-04	CONTRACT NO. 60M62		
		ILLINOIS FED. AID PROJECT		

(13) 12"x8" TEE, MJ
STA 657+69, 40.5' RT
N 1813581.91
E 1116072.09
INSTALL 10' OF 8" PIPE
TO THE NORTH

(14) 8" GATE VALVE IN VAULT
STA 657+69, 36.5' RT
N 1813585.61
E 1116071.95

(15) CONNECTION TO EXISTING
8" WATER MAIN
TWO (2) 8"-45° BENDS, MJ
STA 657+66, 32.0' RT
N 1813590.17
E 1116068.78

(16) 12" GATE VALVE IN VAULT
STA 658+80, 37.0' RT
N 1813588.98
E 1116183.26

(17) 12"x8" TEE, MJ
STA 658+95, 37.0' RT
N 1813589.58
E 1116198.11
INSTALL 10' OF 8" PIPE
TO THE SOUTH

(18) 8" GATE VALVE IN VAULT
STA 658+95, 41.0' RT
N 1813585.92
E 1116198.21

(19) CONNECTION TO EXISTING
8" WATER MAIN
TWO (2) 8"-45° BENDS, MJ
STA 658+92, 45.0' RT
N 1813581.36
E 1116195.41

(20) 12" GATE VALVE IN VAULT
STA 659+39, 38.0' RT
N 1813590.13
E 1116241.78

(21) SEE SHT WT-06

(22) FILLING VAULT

(23) FILLING VAULT

(24) FILLING VAULT

N

SEE DRAWING PP-18
MATCH LINE STA. 654+00.00

MATCH LINE STA. 660+00.00
SEE DRAWING PP-20

135TH ST

654 655+00 656 657 658 659 660

HOWE DR.

EXISTING FIRE HYDRANT TO BE
RELOCATED TO STA 656+50, 1' NORTH OF R.O.W

EXISTING FIRE
HYDRANT TO BE
RELOCATED TO
STA 659+50,
1' NORTH OF R.O.W

PLAN	BY	DATE
SURVEYED		
PLOTTED		
ALIGNMENT CHECKED		
RT. OF WAY CHECKED		
CADD FILE NAME		
NOTE BOOK NO.		

PROFILE	BY	DATE
SURVEYED		
PLOTTED		
GRADES CHECKED		
BM. NOTED		
STRUCTURE NOTATNS CHKD		
NOTE BOOK NO.		

700
695
690
685
680
675

EXISTING GROUND LINE ℄ 135TH ST

VPI = STA 654+63.13
EL = 692.30
L = 200.00'
E = 0.76'

VPI +63.13
EL. 691.32

PROPOSED PGL ALONG ℄ 135TH ST

3.69%

-0.98%

5.5' MIN.
COVER

12"x6" TEE
FOR FIRE HYDRANT
CONNECTION
STA 656+50

12"x8" TEE, MJ (LT)
STA 657+69

12" GATE VALVE, MJ
STA 658+80

12"x8" TEE, MJ (LT)
STA 658+95

12" GATE VALVE, MJ
STA 659+39

12"x6" TEE
FOR FIRE HYDRANT
CONNECTION
STA 656+50

5.5' MIN.
COVER

NEW 12" WATER MAIN, CL 52 DIP

693.28 694.72 | EX. EL. PR. EL. | 692.19 693.30 | 691.56 692.21 | 691.34 691.46 | 691.24 | 691.10 | 690.90 | 690.60 | 690.41 | 690.07 | 689.57 | 689.10 | 688.45

654+00 654+50 655+00 655+50 656+00 656+50 657+00 657+50 658+00 658+50 659+00 659+50 660+00

URS
100 S. WACKER DR.
SUITE 1500
CHICAGO, IL 60606
TEL (312)939-1000
FAX (312)939-4198

FILE NAME = D160M62-SHT-WATER05.dgn	USER NAME = Frank.Stallone	DESIGNED - JTF	REVISED -
		DRAWN - JTF	REVISED -
	PLOT SCALE = 40.000000 ' / in.	CHECKED - MJT	REVISED -
SHT_PLNPROF URBAN	PLOT DATE = 3/15/2013	DATE - 03/13/13	REVISED -

STATE OF ILLINOIS
DEPARTMENT OF TRANSPORTATION

WATER MAIN – PROPOSED PLAN & PROFILE
135TH STREET

SCALE:1"=40'H;1"=5'V | SHEET 5 OF 8 SHEETS | STA. 654+00.00 TO STA. 660+00.00

F.A.P RTE.	SECTION	COUNTY	TOTAL SHEETS	SHEET NO.
330	103R-5	COOK	778	234
	WT-05	CONTRACT NO. 60M62		
		ILLINOIS FED. AID PROJECT		

(21) CONNECTION TO EXISTING 12" WATER MAIN
TWO (2) 16"-45° BENDS, MJ
STA 661+12, 44.5' RT
N 1813589.64
E 1116415.05

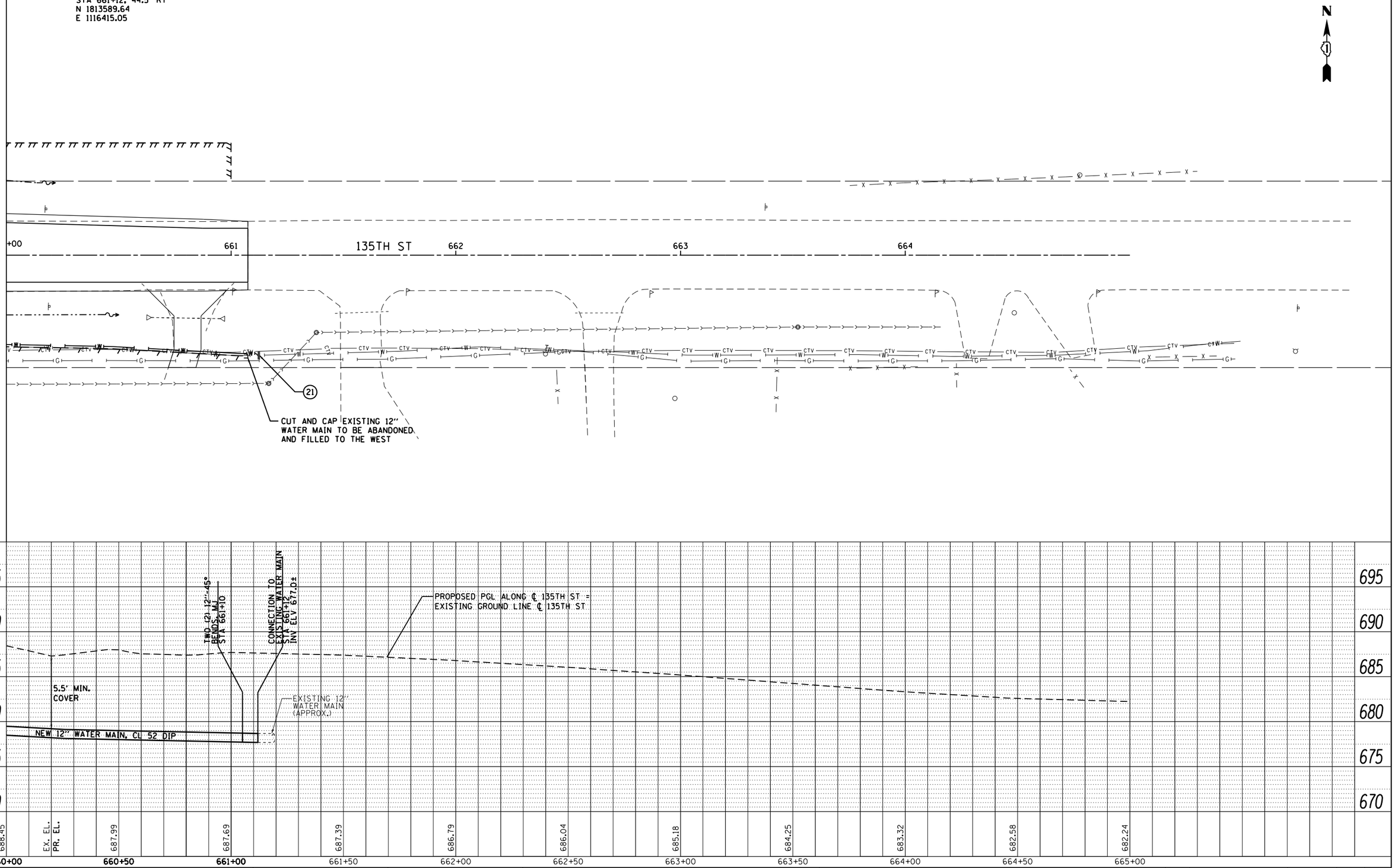

PLAN	BY	DATE
SURVEYED		
PLOTTED		
ALIGNMENT CHECKED		
RT. OF WAY CHECKED		
CADD FILE NAME		
NOTE BOOK NO.		

PROFILE	BY	DATE
SURVEYED		
PLOTTED		
GRADES CHECKED		
B.M. NOTED		
STRUCTURE NOTATNS CHKD		
NOTE BOOK NO.		

URS
100 S. WACKER DR.
SUITE 500
CHICAGO, IL 60606
TEL (312)939-1000
FAX (312)939-4198

FILE NAME = D160M62-SHT-WATER06.dgn	USER NAME = Frank.Stallone	DESIGNED - JTF	REVISED -
		DRAWN - JTF	REVISED -
	PLOT SCALE = 40.000000 ' / in.	CHECKED - MJT	REVISED -
SHT_PLNPROF URBAN	PLOT DATE = 3/15/2013	DATE - 03/13/13	REVISED -

STATE OF ILLINOIS
DEPARTMENT OF TRANSPORTATION

WATER MAIN – PROPOSED PLAN & PROFILE
135TH STREET

SCALE:1"=40'H;1"=5'V | SHEET 6 OF 8 SHEETS | STA. 660+00.00 TO STA. END

F.A.P RTE.	SECTION	COUNTY	TOTAL SHEETS	SHEET NO.
330	103R-5	COOK	778	235
	WT-06	CONTRACT NO. 60M62		
		ILLINOIS FED. AID PROJECT		

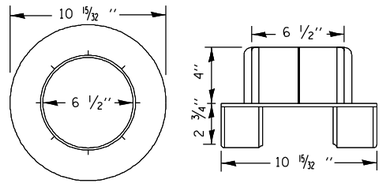

VALVE STABLIZER DETAIL

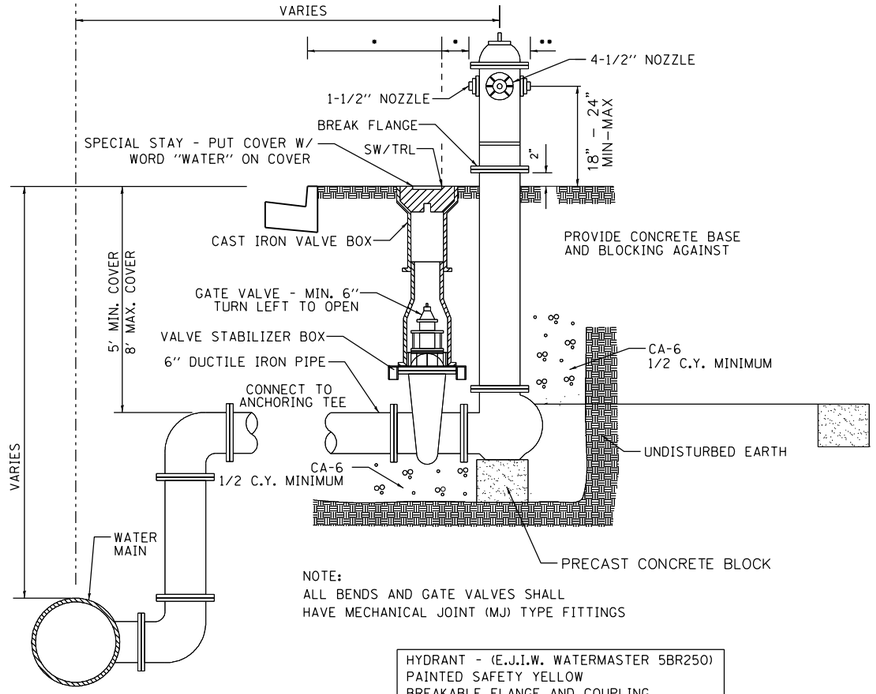

NOTE:
ALL BENDS AND GATE VALVES SHALL HAVE MECHANICAL JOINT (MJ) TYPE FITTINGS

HYDRANT - (E.J.I.W. WATERMASTER 5BR250)
PAINTED SAFETY YELLOW
BREAKABLE FLANGE AND COUPLING
2 - 2½'' AND 1 - 4½'' HOSE NOZZLE ALL WITH NATIONAL STANDARD THREADS

•- CONTRACTOR MUST ENSURE HYDRANT WILL BE 2' MINIMUM FROM PROPOSED FACE OF ROADWAY CURB AND 6'' MINIMUM FROM SIDEWALK/TRAIL.

••- FIRE HYDRANTS MAY BE PLACED IMMEDIATELY ADJACENT TO THE ROADWAY R.O.W. IF ALL CLEARANCES ARE MET.

HYDRANT INSTALLATION

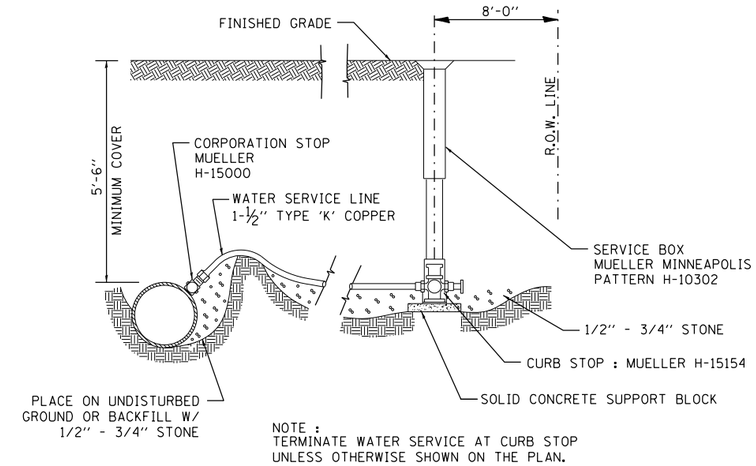

NOTE :
TERMINATE WATER SERVICE AT CURB STOP UNLESS OTHERWISE SHOWN ON THE PLAN.

WATER SERVICE CONNECTION (SMALLER THAN 2-INCHES)

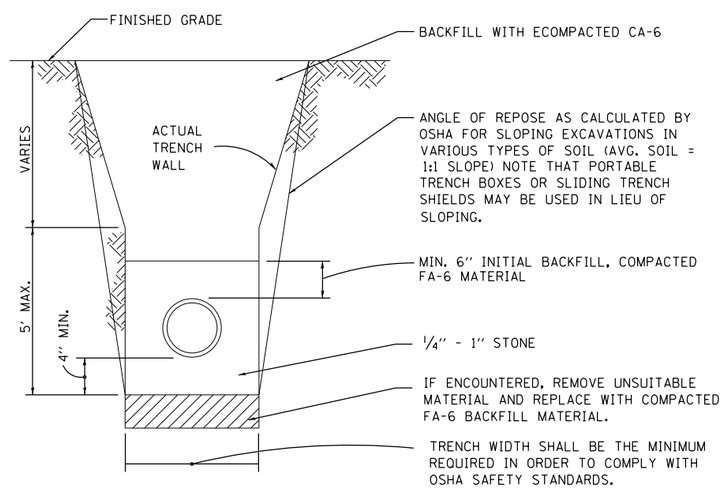

WATER MAIN TRENCH

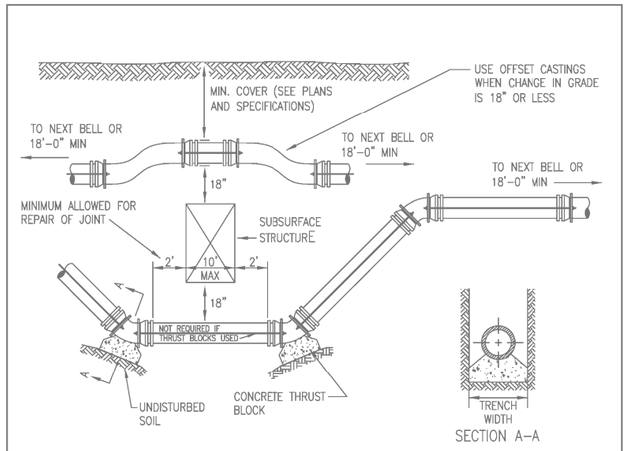

RODS AND WASHERS TO BE A.S.T.M. A-575 MERCHANT QUALITY .17-.24 CARBON. NUTS TO BE AM. STD. HEAVY HOT PRESSED. TIE RODS, BOLTS, NUTS, BANDS, AND WASHERS TO BE FURNISHED AND APPLIED BY CONTRACTOR. ALL STEEL MATERIAL TO BE THOROUGHLY COATED WITH BITUMASTIC EQUAL TO KOPPERS NO. 505

STRAPPING MATERIAL (IN)						
PIPE SIZE	D	RODS NO.	RODS DIA.	STRAP	BOLT DIA.	WASHER
6	7.10	2	3/4	1/2 X 2	3/4	1/2 X 3 X 5
8	9.30	2	3/4	1/2 X 2	3/4	1/2 X 3 X 5
12	13.50	2	3/4	1/2 X 2 1/2	1	1/2 X 3 X 5
16	17.80	4	3/4	1/2 X 3	1	1/2 X 3 X 5

NOTE: PIPE AND FITTINGS TO BE WRAPPED WITH POLYETHYLENE BEFORE PLACEMENT OF STRAPPING AND BUTTRESSES.

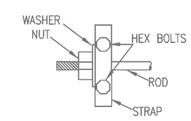

STRAPPING WATER MAIN 6" THRU 16"

STANDARD DRAWING NO.12S

URS
100 S. WACKER DR.
SUITE 500
CHICAGO IL 60606
TEL (312)-939-0000
FAX (312)-939-4198

FILE NAME = D160M62-SHT-WATER07.dgn	USER NAME = Frank_Stallone	DESIGNED - DF	REVISED -
		DRAWN - DF	REVISED -
	PLOT SCALE = 40.0000 ' / in.	CHECKED - TDW	REVISED -
SHT_PLAN	PLOT DATE = 3/15/2013	DATE - 03/13/13	REVISED -

STATE OF ILLINOIS
DEPARTMENT OF TRANSPORTATION

WATER MAIN DETAILS

SCALE: NO SCALE | SHEET 7 OF 8 SHEETS | STA. TO STA.

F.A.P RTE.	SECTION	COUNTY	TOTAL SHEETS	SHEET NO.
330	103R-5	COOK	778	236
	WT-07	CONTRACT NO. 60M62		
		ILLINOIS FED. AID PROJECT		

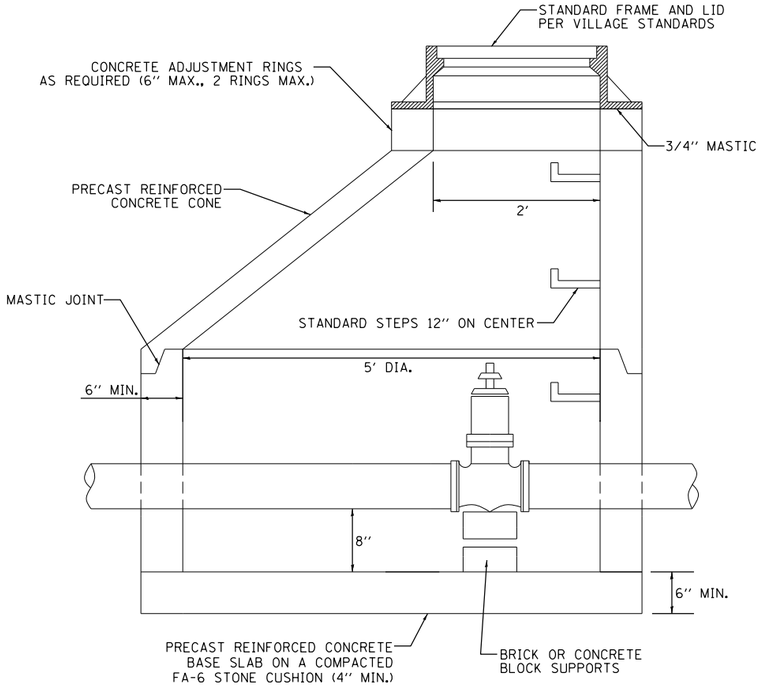

NOTES:
1. ADJUSTMENTS SHALL NOT EXCEED 12" USING ADJUSTMENT RINGS.
2. PRECAST CONCRETE SECTIONS SHALL CONFORM TO ASTM C478.

WATER MAIN VALVE VAULT

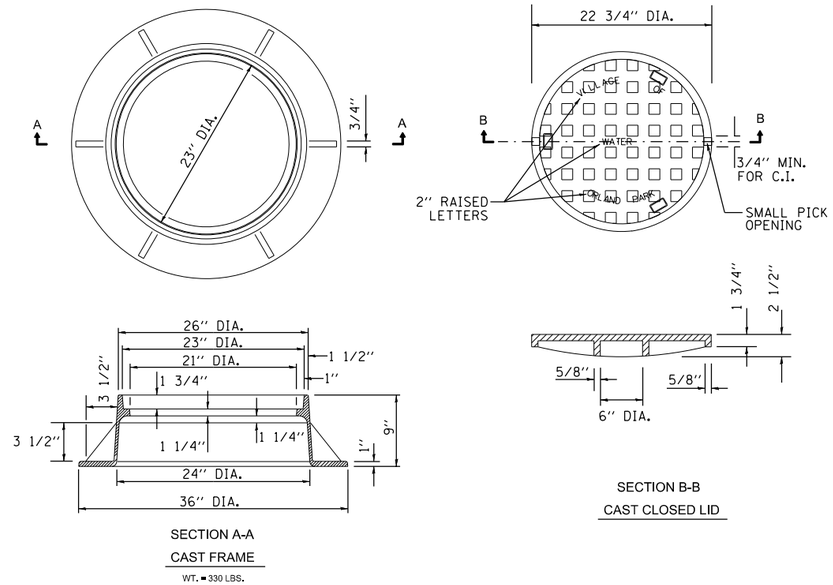

1. DUCTILE IRON CASTINGS SHALL BE GRADE 60-40-18 & SHALL BE TESTED IN ACCORDANCE WITH FEDERAL SPECIFICATIONS.
2. ALL LIDS AND COVERS SHALL BE MACHINED
3. THE MANHOLE COVERS SHALL HAVE RAISED LETTERS AS SHOWN.
4. ALTERNATIVE TO DUCTILE IRON LID, GRAY IRON LID MAY BE USED
5. MINIMUM WEIGHTS FOR CASTINGS AS SHOWN
6. CASTINGS SHALL BE EAST JORDAN IRON WORKS 1050Z1 FRAME & 1020A COVER.

VALVE VAULT FRAME AND COVER

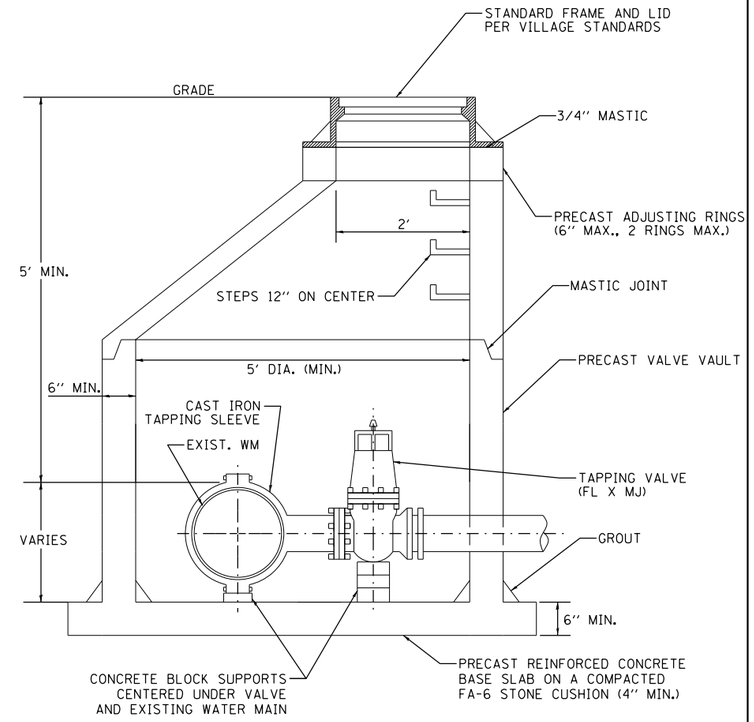

PRESSURE CONNECTION

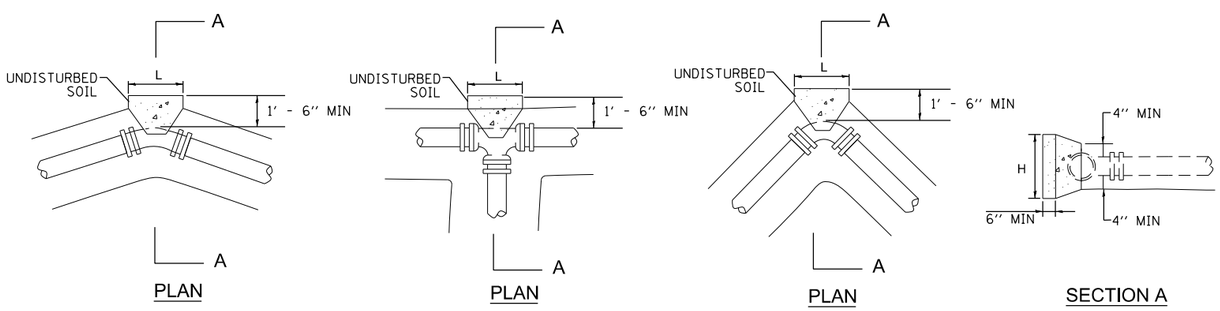

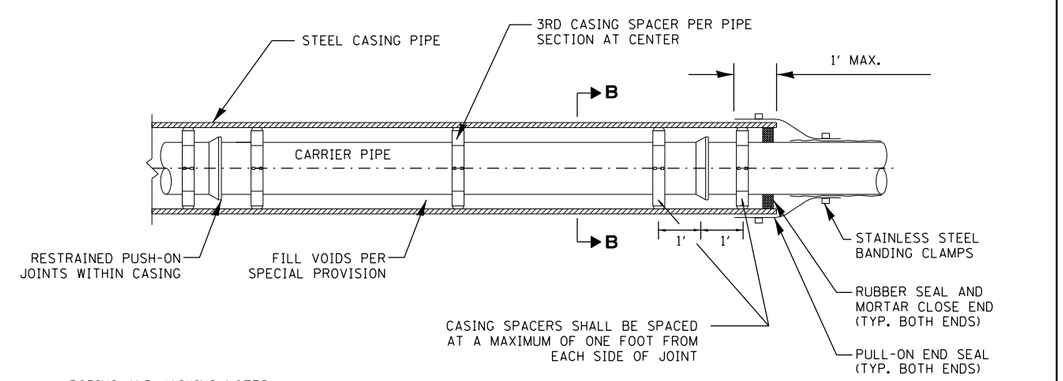

CONCRETE THRUST BLOCK DIMENSIONS										
PIPE SIZE	11-15° BEND		22-30° BEND		45°-BEND		90°-BEND		TEE & PLUG	
DIAMETER	H	L	H	L	H	L	H	L	H	L
< 8"	1'-6"	1'-6"	2'-0"	2'-6"	2'-6"	3'-0"	3'-6"	4'-0"	3'-0"	3'-6"
< 12"	1'-6"	2'-0"	2'-3"	2'-6"	3'-0"	3'-6"	4'-0"	4'-6"	3'-6"	4'-0"
< 16"	2'-0"	2'-0"	2'-6"	3'-0"	4'-0"	4'-6"	5'-0"	6'-0"	4'-6"	5'-6"

WATER MAIN THRUST BLOCKS

THRUST BLOCK NOTES:
1. ALL BLOCKING SHALL BE CONSTRUCTED WITH POURED CL. X CONCRETE AGAINST UNDISTURBED VERTICAL EARTH FACE WITH A MINIMUM WIDTH OF 12 INCHES.
2. THRUST BLOCKS MUST BE USED AT ALL BENDS 11° DEGREES OR GREATER.
3. RESTRAINED JOINT PIPE MAY BE USED AS AN ALTERNATIVE TO CONCRETE THRUST BLOCKS WHEN APPOVED BY THE ENGINEER. THE CONTRACTOR MUST SUBMIT RESTRAINED JOINT LENGTHS WITH CALCULATIONS WHERE RESTRAINED JOINT PIPE IS TO BE USED. THE CALCULATIONS MUST BE SIGNED AND SEALED BY A PROFESSIONAL ENGINEER LICENSED IN THE STATE OF ILLINOIS.
4. ALL PIPE PLACED UNDER PAVED ROADWAY MUST BE RESTRAINED JOINT PIPE. TRUST BLOCKING SHALL NOT BE REQUIRED IN THESE AREAS.
5. TEST PRESSURE SHALL BE 150 PSI.

BORING AND JACKING NOTES:
1. JACKING AND BORING OPERATIONS AND CASING PIPE SHALL MEET THE REQUIREMENTS OF THE PROJECT SPECIAL PROVISIONS.
2. ACCESS PITS SHALL BE LOCATED A MINIMUM 10 FEET FROM THE ROADWAY EDGE OF PAVEMENT AND BE LOCATED OUTSIDE OF THE I.D.O.T. HIGHWAY RIGHT-OF-WAY.
3. SHORING SHALL BE INSTALLED IMMEDIATELY DURING THE EXCAVATION OF ACCESS PITS AND SHALL CONFORM TO OSHA STANDARDS FOR TRENCH PROTECTION.
4. SHORING SHALL BE DESIGNED, ERECTED, SUPPORTED, BRACED, AND MAINTAINED SUCH THAT IT WILL SAFFELY SUPPORT ALL VERTICAL AND HORIZONTAL LOADS DURING CONSTRUCTION OPERATIONS.
7. OPEN ACCESS PITS SHALL BE CLEARLY MARKED AND REMAIN PROTECTED WITH TEMPORARY CONCRETE BARRIERS AT ALL TIMES.
8. BACKFILL ACCESS PITS WITH CA-6 AND COMPACT.

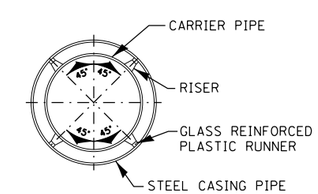

SECTION B-B

CASING PIPE DETAIL

URS
100 S. WACKER DR.
SUITE 500
CHICAGO, IL 60606
TEL (312)939-1000
FAX (312)939-498

FILE NAME = D160M62-SHT-WATER08.dgn	USER NAME = Frank.Stallone	DESIGNED - DF	REVISED -	STATE OF ILLINOIS DEPARTMENT OF TRANSPORTATION	WATER MAIN DETAILS	F.A.P RTE.	SECTION	COUNTY	TOTAL SHEETS / SHEET NO.
		DRAWN - DF	REVISED -			330	103R-5	COOK	778 / 237
	PLOT SCALE = 40.0000 ' / in.	CHECKED - TDW	REVISED -				WT-08	CONTRACT NO. 60M62	
SHT_PLAN	PLOT DATE = 3/15/2013	DATE - 03/13/13	REVISED -		SCALE: NO SCALE / SHEET 8 OF 8 SHEETS / STA. TO STA.		ILLINOIS FED. AID PROJECT		

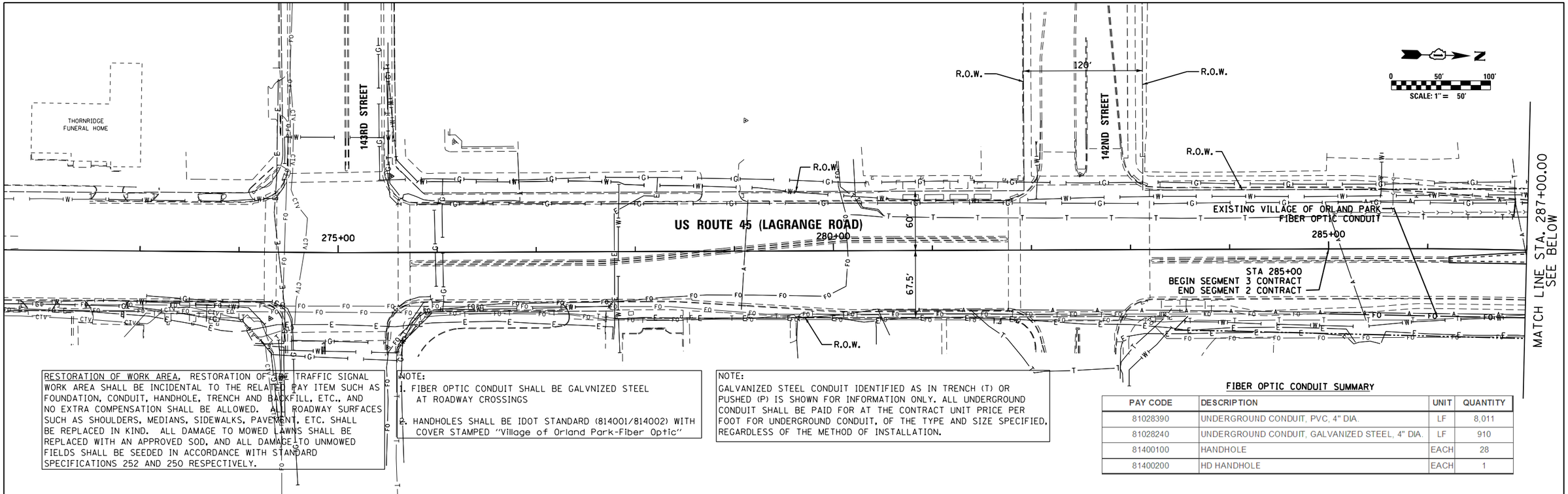

RESTORATION OF WORK AREA. RESTORATION OF THE TRAFFIC SIGNAL WORK AREA SHALL BE INCIDENTAL TO THE RELATED PAY ITEM SUCH AS FOUNDATION, CONDUIT, HANDHOLE, TRENCH AND BACKFILL, ETC., AND NO EXTRA COMPENSATION SHALL BE ALLOWED. ALL ROADWAY SURFACES SUCH AS SHOULDERS, MEDIANS, SIDEWALKS, PAVEMENT, ETC. SHALL BE REPLACED IN KIND. ALL DAMAGE TO MOWED LAWNS SHALL BE REPLACED WITH AN APPROVED SOD, AND ALL DAMAGE TO UNMOWED FIELDS SHALL BE SEEDED IN ACCORDANCE WITH STANDARD SPECIFICATIONS 252 AND 250 RESPECTIVELY.

NOTE:
1. FIBER OPTIC CONDUIT SHALL BE GALVNIZED STEEL AT ROADWAY CROSSINGS
2. HANDHOLES SHALL BE IDOT STANDARD (814001/814002) WITH COVER STAMPED "Village of Orland Park-Fiber Optic"

NOTE:
GALVANIZED STEEL CONDUIT IDENTIFIED AS IN TRENCH (T) OR PUSHED (P) IS SHOWN FOR INFORMATION ONLY. ALL UNDERGROUND CONDUIT SHALL BE PAID FOR AT THE CONTRACT UNIT PRICE PER FOOT FOR UNDERGROUND CONDUIT, OF THE TYPE AND SIZE SPECIFIED, REGARDLESS OF THE METHOD OF INSTALLATION.

FIBER OPTIC CONDUIT SUMMARY

PAY CODE	DESCRIPTION	UNIT	QUANTITY
81028390	UNDERGROUND CONDUIT, PVC, 4" DIA.	LF	8,011
81028240	UNDERGROUND CONDUIT, GALVANIZED STEEL, 4" DIA.	LF	910
81400100	HANDHOLE	EACH	28
81400200	HD HANDHOLE	EACH	1

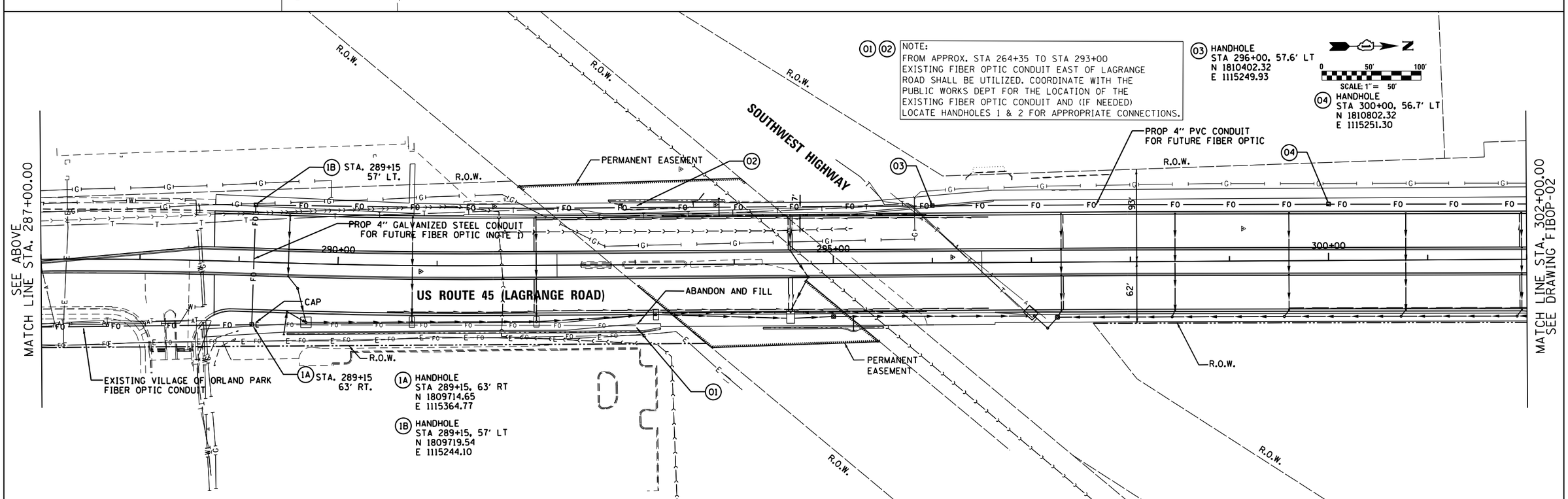

URS
100 S. WACKER DR.
SUITE 500
CHICAGO IL 60606
TEL (312)-939-1000
FAX (312)-939-4168

FILE NAME = D160M62-SHT-FIBOP01.dgn	USER NAME = Frank.Stallone	DESIGNED - BA	REVISED -
		DRAWN - BA	REVISED -
	PLOT SCALE = 100.000000 ' / in.	CHECKED - MJT	REVISED -
SHT_DOUBLE PLAN	PLOT DATE = 3/15/2013	DATE - 03/13/13	REVISED -

STATE OF ILLINOIS
DEPARTMENT OF TRANSPORTATION

PROPOSED FIBER OPTIC CONDUIT
US 45 (LAGRANGE RD)
FROM 142ND STREET TO CREEK ROAD

SCALE: 1"=50' | SHEET 1 OF 5 SHEETS | STA. BEGIN TO STA. 302+00.00

F.A.P RTE.	SECTION	COUNTY	TOTAL SHEETS	SHEET NO.
330	103R-5	COOK	778	238
	FIBOP-01	CONTRACT NO. 60M62		
		ILLINOIS FED. AID PROJECT		

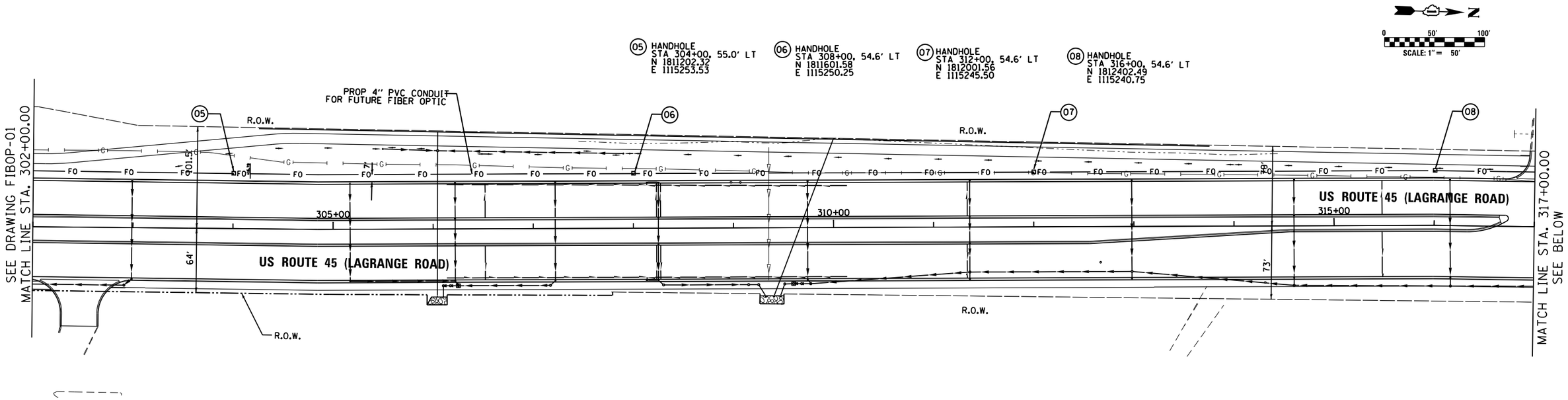

RESTORATION OF WORK AREA, RESTORATION OF THE TRAFFIC SIGNAL WORK AREA SHALL BE INCIDENTAL TO THE RELATED PAY ITEM SUCH AS FOUNDATION, CONDUIT, HANDHOLE, TRENCH AND BACKFILL, ETC., AND NO EXTRA COMPENSATION SHALL BE ALLOWED. ALL ROADWAY SURFACES SUCH AS SHOULDERS, MEDIANS, SIDEWALKS, PAVEMENT, ETC. SHALL BE REPLACED IN KIND. ALL DAMAGE TO MOWED LAWNS SHALL BE REPLACED WITH AN APPROVED SOD, AND ALL DAMAGE TO UNMOWED FIELDS SHALL BE SEEDED IN ACCORDANCE WITH STANDARD SPECIFICATIONS 252 AND 250 RESPECTIVELY.

NOTE:
GALVANIZED STEEL CONDUIT IDENTIFIED AS IN TRENCH (T) OR PUSHED (P) IS SHOWN FOR INFORMATION ONLY. ALL UNDERGROUND CONDUIT SHALL BE PAID FOR AT THE CONTRACT UNIT PRICE PER FOOT FOR UNDERGROUND CONDUIT, OF THE TYPE AND SIZE SPECIFIED, REGARDLESS OF THE METHOD OF INSTALLATION.

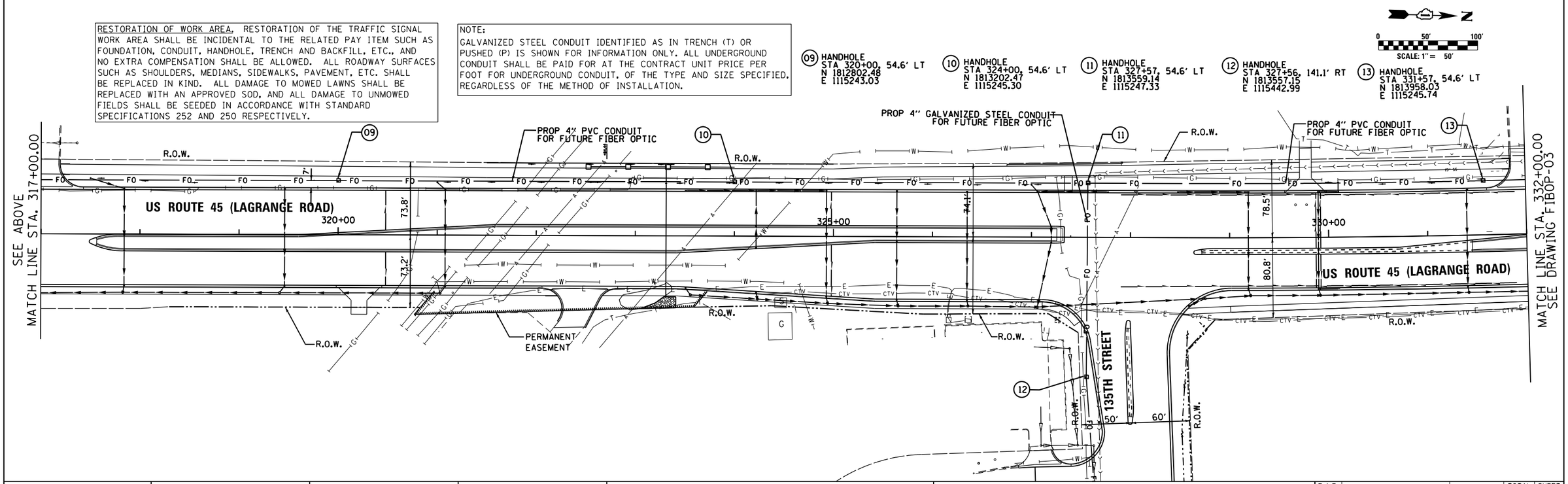

URS
100 S. WACKER DR.
SUITE 500
CHICAGO IL 60606
TEL (312-939-1000
FAX (312-939-4198

FILE NAME = D160M62-SHT-FIBOP02.dgn	USER NAME = Frank.Stallone	DESIGNED - BA	REVISED -
		DRAWN - BA	REVISED -
	PLOT SCALE = 100.000000 ' / in.	CHECKED - MJT	REVISED -
SHT.DOUBLE PLAN	PLOT DATE = 3/15/2013	DATE - 03/13/13	REVISED -

STATE OF ILLINOIS
DEPARTMENT OF TRANSPORTATION

PROPOSED FIBER OPTIC CONDUIT
US 45 (LAGRANGE RD)
FROM 142ND STREET TO CREEK ROAD

SCALE: 1"=50' | SHEET 2 OF 5 SHEETS | STA. 302+00.00 TO STA. 332+00.00

F.A.P RTE.	SECTION	COUNTY	TOTAL SHEETS	SHEET NO.
330	103R-5	COOK	778	239
	FIBOP-02	CONTRACT NO. 60M62		
		ILLINOIS FED. AID PROJECT		

RESTORATION OF WORK AREA, RESTORATION OF THE TRAFFIC SIGNAL WORK AREA SHALL BE INCIDENTAL TO THE RELATED PAY ITEM SUCH AS FOUNDATION, CONDUIT, HANDHOLE, TRENCH AND BACKFILL, ETC., AND NO EXTRA COMPENSATION SHALL BE ALLOWED. ALL ROADWAY SURFACES SUCH AS SHOULDERS, MEDIANS, SIDEWALKS, PAVEMENT, ETC. SHALL BE REPLACED IN KIND. ALL DAMAGE TO MOWED LAWNS SHALL BE REPLACED WITH AN APPROVED SOD, AND ALL DAMAGE TO UNMOWED FIELDS SHALL BE SEEDED IN ACCORDANCE WITH STANDARD SPECIFICATIONS 252 AND 250 RESPECTIVELY.

NOTE:
GALVANIZED STEEL CONDUIT IDENTIFIED AS IN TRENCH (T) OR PUSHED (P) IS SHOWN FOR INFORMATION ONLY. ALL UNDERGROUND CONDUIT SHALL BE PAID FOR AT THE CONTRACT UNIT PRICE PER FOOT FOR UNDERGROUND CONDUIT, OF THE TYPE AND SIZE SPECIFIED, REGARDLESS OF THE METHOD OF INSTALLATION.

(14) HANDHOLE
STA 335+57, 54.6' LT
N 1814357.40
E 1115234.60

(15) HANDHOLE
STA 339+57, 54.6' LT
N 1814757.24
E 1115223.03

(16) HANDHOLE
STA 343+57, 54.6' LT
N 1815157.07
E 1115211.46

SCALE: 1" = 50'

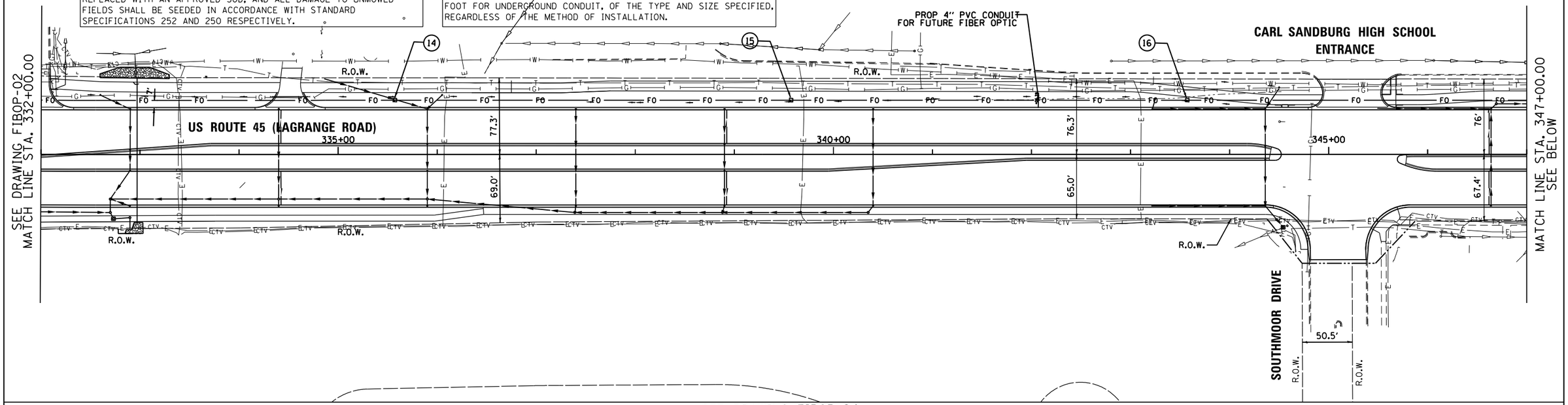

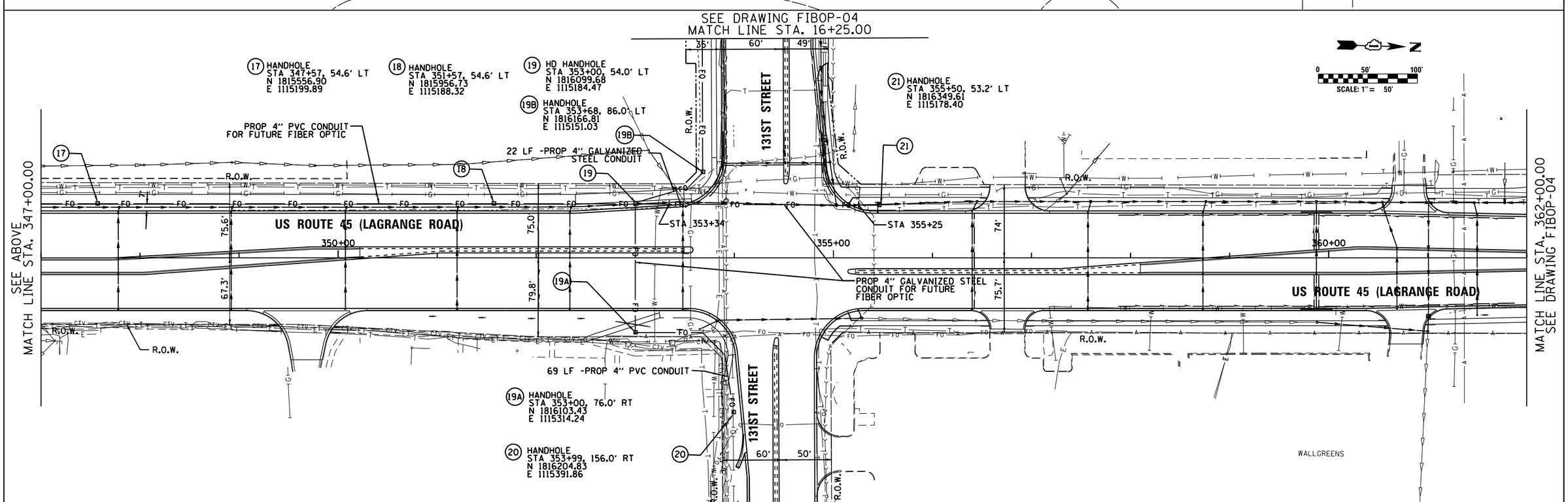

URS
100 S. WACKER DR.
SUITE 500
CHICAGO IL 60606
TEL (312)-939-1000
FAX (312)-939-4198

FILE NAME =	USER NAME = Frank.Stallone	DESIGNED - BA	REVISED -
D160M62-SHT-FIBOP03.dgn		DRAWN - BA	REVISED -
	PLOT SCALE = 100.000000 ' / in.	CHECKED - MJT	REVISED -
SHT.DOUBLE PLAN	PLOT DATE = 3/15/2013	DATE - 03/13/13	REVISED -

STATE OF ILLINOIS
DEPARTMENT OF TRANSPORTATION

PROPOSED FIBER OPTIC CONDUIT
US 45 (LAGRANGE RD)
FROM 142ND STREET TO CREEK ROAD

SCALE: 1"=50' | SHEET 3 OF 5 SHEETS | STA. 332+00.00 TO STA. 362+00.00

F.A.P RTE.	SECTION	COUNTY	TOTAL SHEETS	SHEET NO.
330	103R-5	COOK	778	240
	FIBOP-03	CONTRACT NO. 60M62		
		ILLINOIS FED. AID PROJECT		

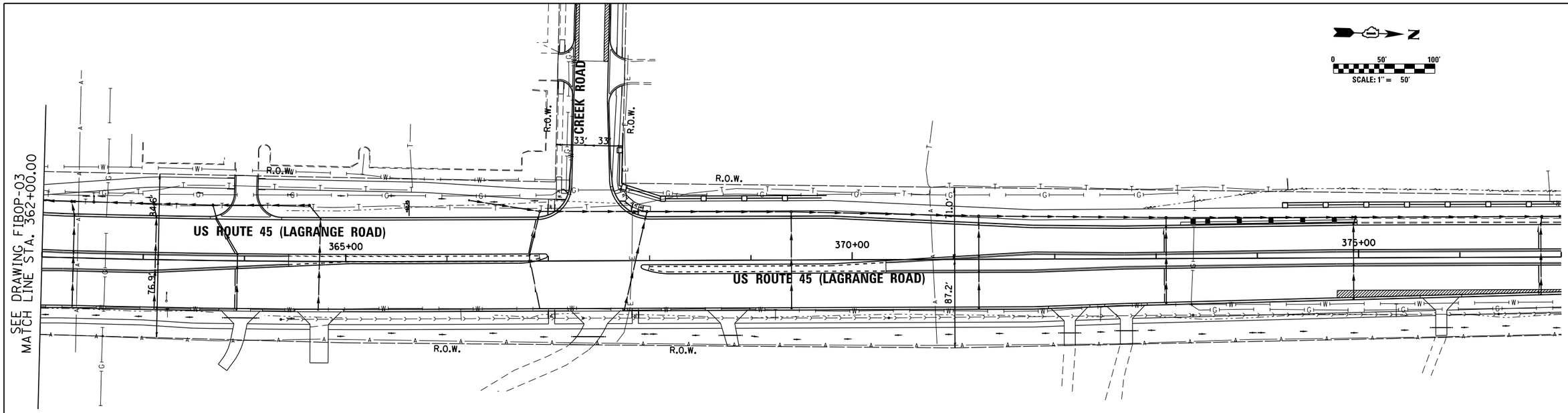

RESTORATION OF WORK AREA, RESTORATION OF THE TRAFFIC SIGNAL WORK AREA SHALL BE INCIDENTAL TO THE RELATED PAY ITEM SUCH AS FOUNDATION, CONDUIT, HANDHOLE, TRENCH AND BACKFILL, ETC., AND NO EXTRA COMPENSATION SHALL BE ALLOWED. ALL ROADWAY SURFACES SUCH AS SHOULDERS, MEDIANS, SIDEWALKS, PAVEMENT, ETC. SHALL BE REPLACED IN KIND. ALL DAMAGE TO MOWED LAWNS SHALL BE REPLACED WITH AN APPROVED SOD, AND ALL DAMAGE TO UNMOWED FIELDS SHALL BE SEEDED IN ACCORDANCE WITH STANDARD SPECIFICATIONS 252 AND 250 RESPECTIVELY.

NOTE:
GALVANIZED STEEL CONDUIT IDENTIFIED AS IN TRENCH (T) OR PUSHED (P) IS SHOWN FOR INFORMATION ONLY. ALL UNDERGROUND CONDUIT SHALL BE PAID FOR AT THE CONTRACT UNIT PRICE PER FOOT FOR UNDERGROUND CONDUIT, OF THE TYPE AND SIZE SPECIFIED, REGARDLESS OF THE METHOD OF INSTALLATION.

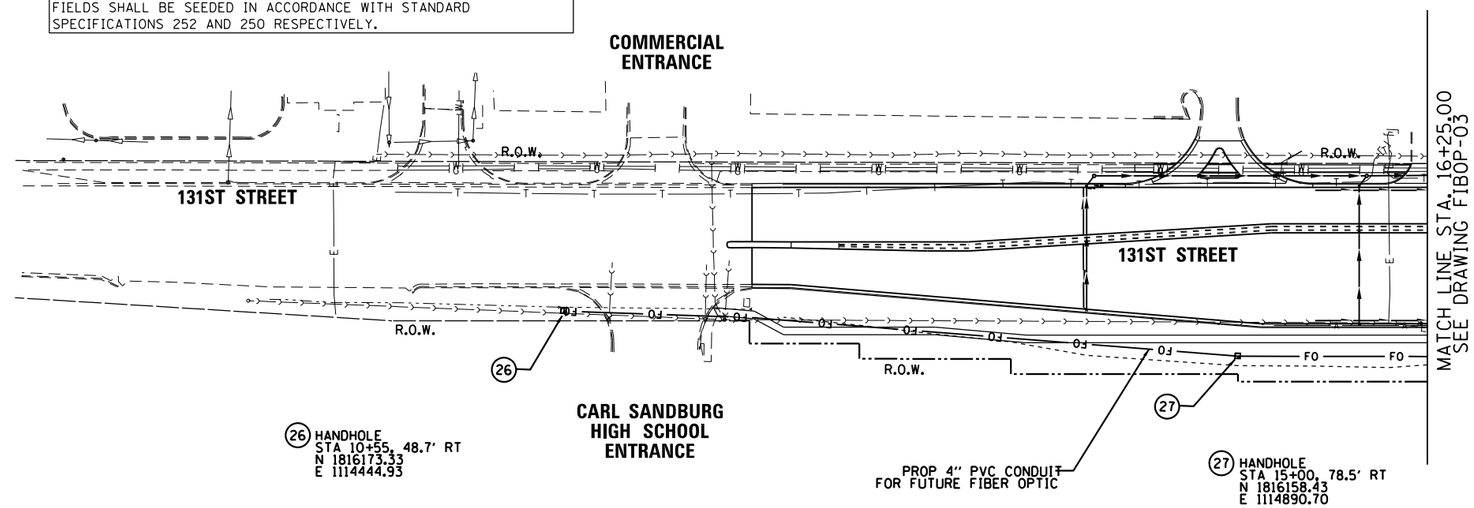

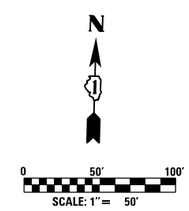

URS
100 S. WACKER DR.
SUITE 500
CHICAGO IL 60606
TEL (312)-939-1000
FAX (312)-939-4198

FILE NAME = D160M62-SHT-FIBOP04.dgn	USER NAME = Frank.Stallone	DESIGNED - BA	REVISED -
		DRAWN - BA	REVISED -
	PLOT SCALE = 100.000000 ' / in.	CHECKED - MJT	REVISED -
SHT_DOUBLE PLAN	PLOT DATE = 3/15/2013	DATE - 03/13/13	REVISED -

STATE OF ILLINOIS
DEPARTMENT OF TRANSPORTATION

PROPOSED FIBER OPTIC CONDUIT
US 45 (LAGRANGE RD)
FROM 135TH STREET TO CREEK ROAD

SCALE: 1"=50' | SHEET 4 OF 5 SHEETS | STA. 362+00.00 TO STA. END

F.A.P RTE.	SECTION	COUNTY	TOTAL SHEETS	SHEET NO.
330	103R-5	COOK	778	241
	FIBOP-04	CONTRACT NO. 60M62		
		ILLINOIS FED. AID PROJECT		

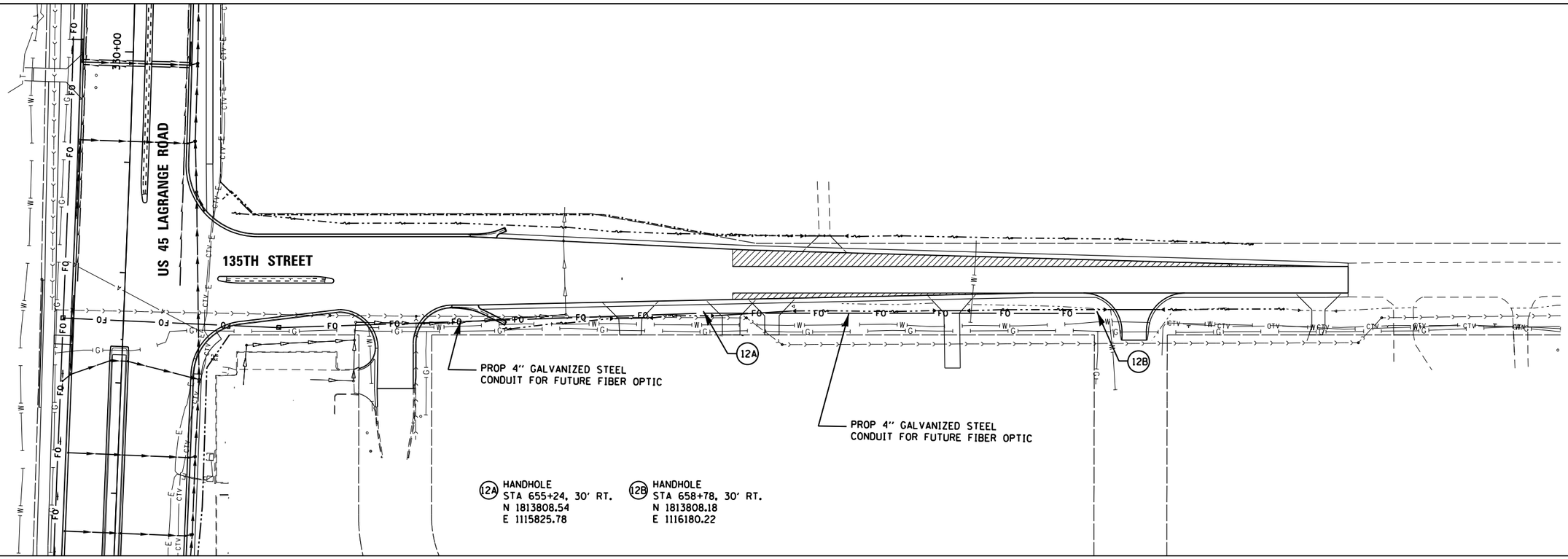

URS
100 S. WACKER DR.
SUITE 500
CHICAGO IL 60606
TEL (312)939-1000
FAX (312)939-4198

FILE NAME = D160M62-SHT-FIBOP05.dgn	USER NAME = Frank.Stallone	DESIGNED - BFH	REVISED -	STATE OF ILLINOIS DEPARTMENT OF TRANSPORTATION	PROPOSED FIBER OPTIC CONDUIT US 45 (LAGRANGE ROAD) 135TH STREET
		DRAWN - BFH	REVISED -		
	PLOT SCALE = 100.000000 '/ in.	CHECKED - MJT	REVISED -		
SHT_DOUBLE PLAN	PLOT DATE = 3/15/2013	DATE - 03/13/13	REVISED -		SCALE: 1"=50' SHEET 5 OF 5 SHEETS STA. BEGIN TO STA. END

F.A.P RTE.	SECTION	COUNTY	TOTAL SHEETS	SHEET NO.
330	103R-5	COOK	778	242
FIBOP-05		CONTRACT NO. 60M62		
		ILLINOIS FED. AID PROJECT		

UTILITY OWNERS
COMED = ELECTRIC
COMCAST = CABLE TV
WOW = CABLE TV
AT&T = TELEPHONE
AT&T = FIBER OPTIC
NICOR = GAS
VILLAGE OF ORLAND PARK = SEWER
VILLAGE OF ORLAND PARK = WATER
PALOS PARK = WATER
NICOR = PIPELINE
WEST SHORE = PIPELINE
ONEOK = PIPELINE
PEOPLES ENERGY = PIPELINE

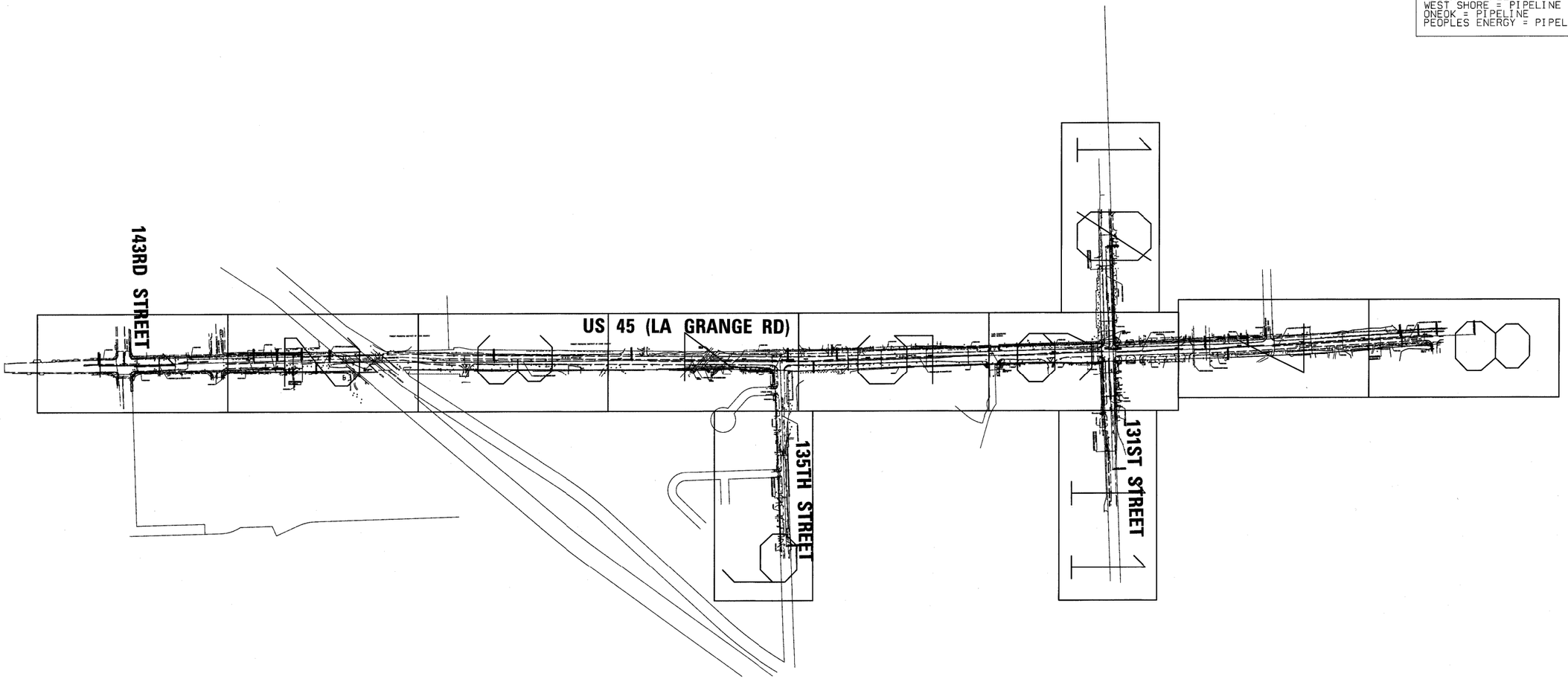

A	AERIAL UTILITY
	UNKNOWN
CTV	CABLE TV
T	TELEPHONE
G	GAS
E	ELECTRIC
W	WATER
FO	FIBER OPTIC
	SEWER
	TBE TEST HOLE

Utilities shown on these plans as depicted in the legend have been investigated by Cardno TBE in accordance with SUE Industry Standards. All other information shown has been provided to Cardno TBE by others. TBE's SUE field investigation was performed 12/18/10 through 1/18/11. Changes to utilities after 1/18/11 may have been made and therefore may result in variances from this plan. Consideration should be given to updating this plan if deemed advisable prior to final design and construction.

ALL UTILITIES SHOWN QUALITY LEVEL "B" UNLESS NOTED OTHERWISE.

LICENSED PROFESSIONAL ENGINEER
KENNETH F. SLANINKA, Jr.
062-055488
STATE OF ILLINOIS

signature
1/25/11
date
license expires 11-30-11

Cardno TBE
CIVIL ENGINEERING * TRANSPORTATION * ENVIRONMENTAL * PLANNING * UTILITY ENGINEERING/LOCATING

TBE Job No. IL09510425, 10429
SUE Plan Page: Cover

Utility Quality Level "A" : Test Hole
Utility Quality Level "B" : Designating
Utility Quality Level "C" : Research with Survey
Utility Quality Level "D" : Records Research

DESIGNED EG	REVISED	
DRAWN KLC	REVISED	
CHECKED	REVISED	
DATE 1/20/11	REVISED	

STATE OF ILLINOIS
DEPARTMENT OF TRANSPORTATION

US RT.45 from 131st Street to 143rd Street
LaGrange, IL.

F.A.P RTE.	SECTION	COUNTY	TOTAL SHEETS	SHEET NO.
330	103R-5	Cook	778	243
		Contract No. 60M62		
FED. ROAD DIST. NO.	ILLINOIS	IDOT Project No.		

UTILITY OWNERS
COMED = ELECTRIC
AT&T = TELEPHONE
AT&T = FIBER OPTIC
NICOR = GAS
VILLAGE OF ORLAND PARK = WATER

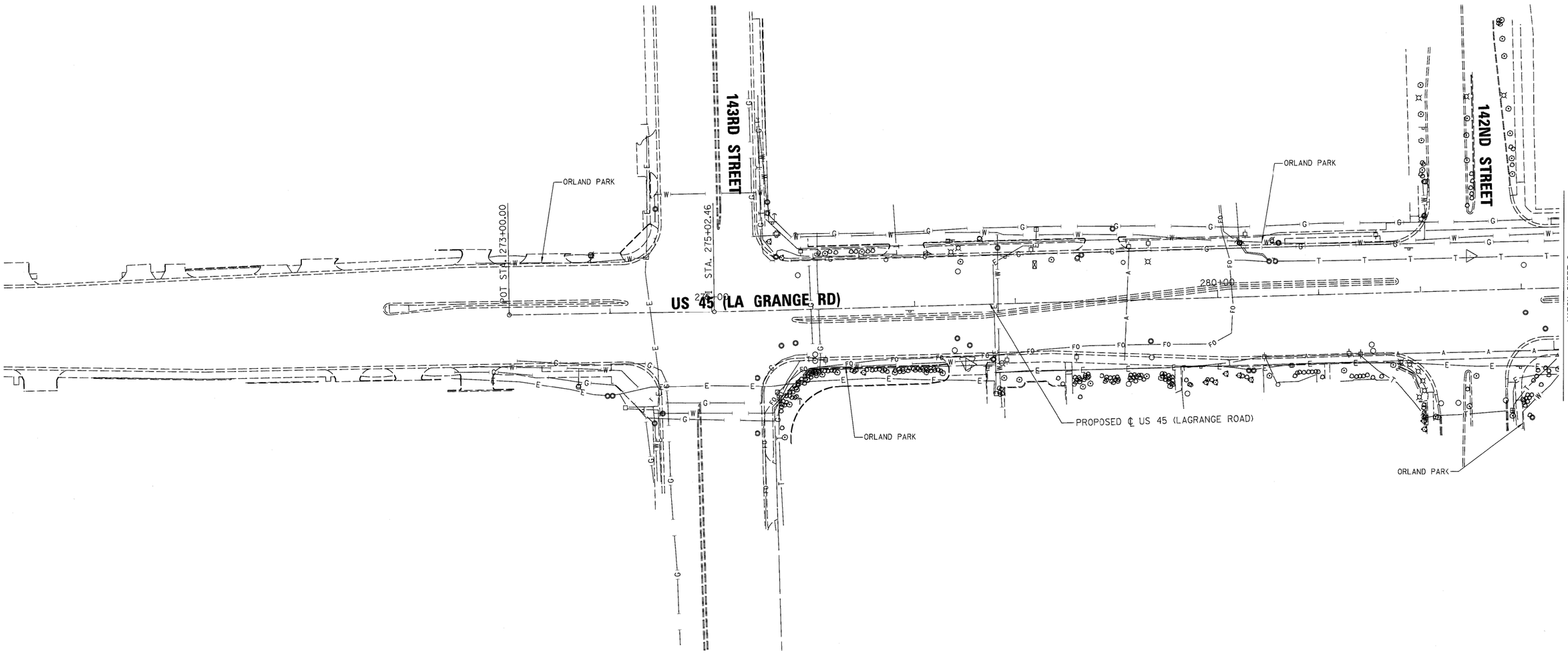

A — A	AERIAL UTILITY
- - - - - -	UNKNOWN
CTV — CTV	CABLE TV
T — T	TELEPHONE
G — G	GAS
E — E	ELECTRIC
W — W	WATER
FO — FO	FIBER OPTIC
—) —) —) —	SEWER
✦	TBE TEST HOLE

Utilities shown on these plans as depicted in the legend have been investigated by Cardno TBE in accordance with SUE Industry Standards. All other information shown has been provided to Cardno TBE by others. TBE's SUE field investigation was performed 12/18/10 through 1/18/11. Changes to utilities after 1/18/11 may have been made and therefore may result in variances from this plan. Consideration should be given to updating this plan if deemed advisable prior to final design and construction.

ALL UTILITIES SHOWN QUALITY LEVEL "B" UNLESS NOTED OTHERWISE.

20 0 METERS 20 40
50 0 FEET 50 100

LICENSED PROFESSIONAL ENGINEER
KENNETH F. SLANINKA, Jr.
062-055488
STATE OF ILLINOIS
signature
1/25/11
date
license expires 11-30-11

Cardno TBE
CIVIL ENGINEERING * TRANSPORTATION * ENVIRONMENTAL * PLANNING * UTILITY ENGINEERING/LOCATING

TBE Job No. IL09510425, 10429
SUE Plan Page: 1 of 11

Utility Quality Level "A" : Test Hole
Utility Quality Level "B" : Designating
Utility Quality Level "C" : Research with Survey
Utility Quality Level "D" : Records Research

DESIGNED	EG	REVISED
DRAWN	KLC	REVISED
CHECKED		REVISED
DATE	1/20/11	REVISED

STATE OF ILLINOIS
DEPARTMENT OF TRANSPORTATION

US RT.45 from 131st Street to 143rd Street
LaGrange, IL.

F.A.P. RTE.	SECTION	COUNTY	TOTAL SHEETS	SHEET NO.
330	103R-5	Cook	778	244
		Contract No. 60M62		
FED. ROAD DIST. NO.	ILLINOIS	IDOT Project No.		

UTILITY OWNERS
COMED = ELECTRIC
AT&T = TELEPHONE
AT&T = FIBER OPTIC
NICOR = GAS
VILLAGE OF ORLAND PARK = WATER

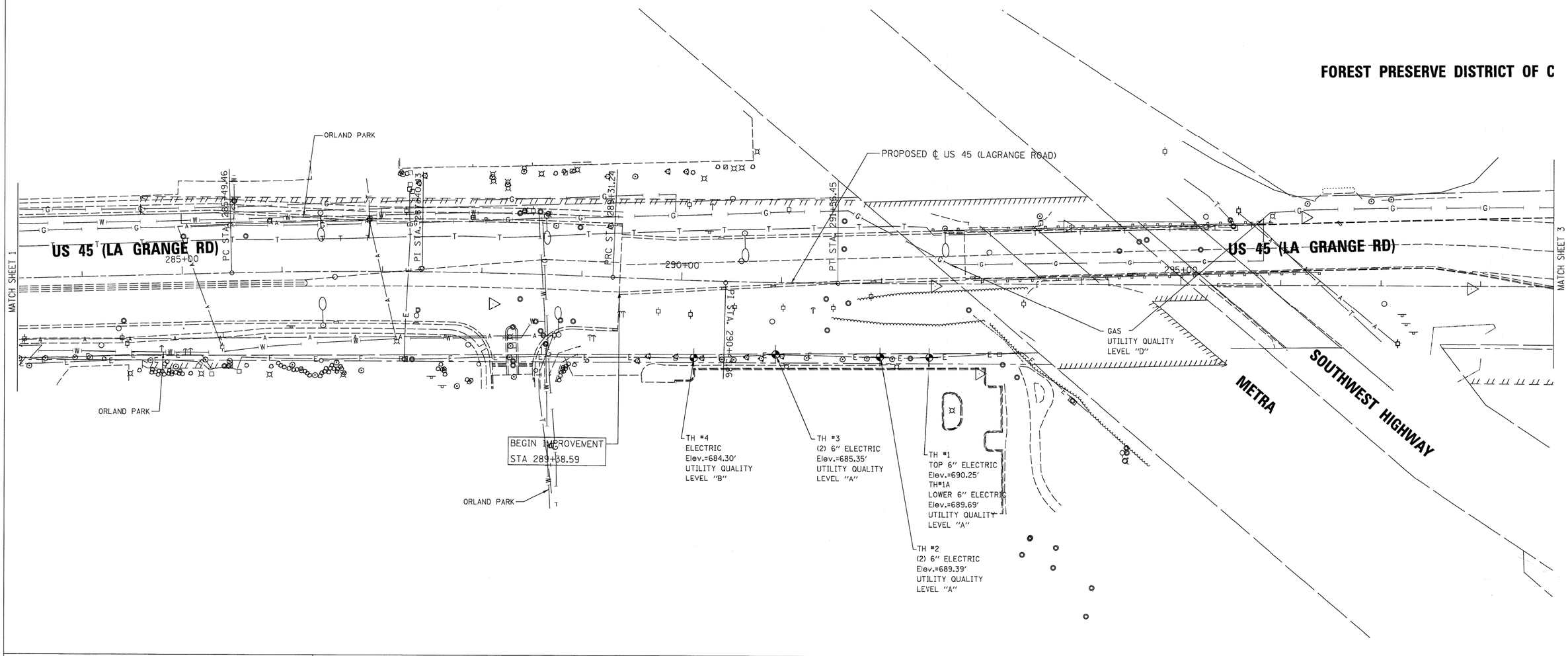

A — A	AERIAL UTILITY
	UNKNOWN
CTV — CTV	CABLE TV
T — T	TELEPHONE
G	GAS
E — E	ELECTRIC
W	WATER
FO — FO	FIBER OPTIC
	SEWER
	TBE TEST HOLE

Utilities shown on these plans as depicted in the legend have been investigated by Cardno TBE in accordance with SUE Industry Standards. All other information shown has been provided to Cardno TBE by others. Cardno TBE's QL "B" SUE field investigation was performed 12/18/10 through 1/18/11. Cardno TBE's QL "A" SUE field investigation was performed 8/05/11 through 8/08/11. Changes to utilities after 1/18/11 may have been made and therefore may result in variances from this plan. Consideration should be given to updating this plan if deemed advisable prior to final design and construction.

ALL UTILITIES SHOWN QUALITY LEVEL "B" UNLESS NOTED OTHERWISE.

20 0 METERS 20 40
50 0 FEET 50 100

LICENSED PROFESSIONAL ENGINEER
KENNETH F. SLANINKA Jr.
062-055486
STATE OF ILLINOIS
signature
8/18/11
date
license expires 11-30-11

Cardno TBE
CIVIL ENGINEERING * TRANSPORTATION * ENVIRONMENTAL * PLANNING * UTILITY ENGINEERING/LOCATING

TBE Job No. IL09510425, 10429, 10447
SUE Plan Page: 2 of 11

Utility Quality Level "A" : Test Hole
Utility Quality Level "B" : Designating
Utility Quality Level "C" : Research with Survey
Utility Quality Level "D" : Records Research

DESIGNED	EG	REVISED
DRAWN	KLC	8/15/11 TEST HOLES #1-4 ADDED
CHECKED	KFS	REVISED
DATE	1/20/11	REVISED

STATE OF ILLINOIS
DEPARTMENT OF TRANSPORTATION

US RT.45 from 131st Street to 143rd Street
LaGrange, IL.

F.A. P RTE.	SECTION	COUNTY	TOTAL SHEETS	SHEET NO.
330	103R-5	Cook	778	245
		Contract No. 60M62		
FED. ROAD DIST. NO.	ILLINOIS	IDOT Project No.		

UTILITY OWNERS
NICOR = GAS

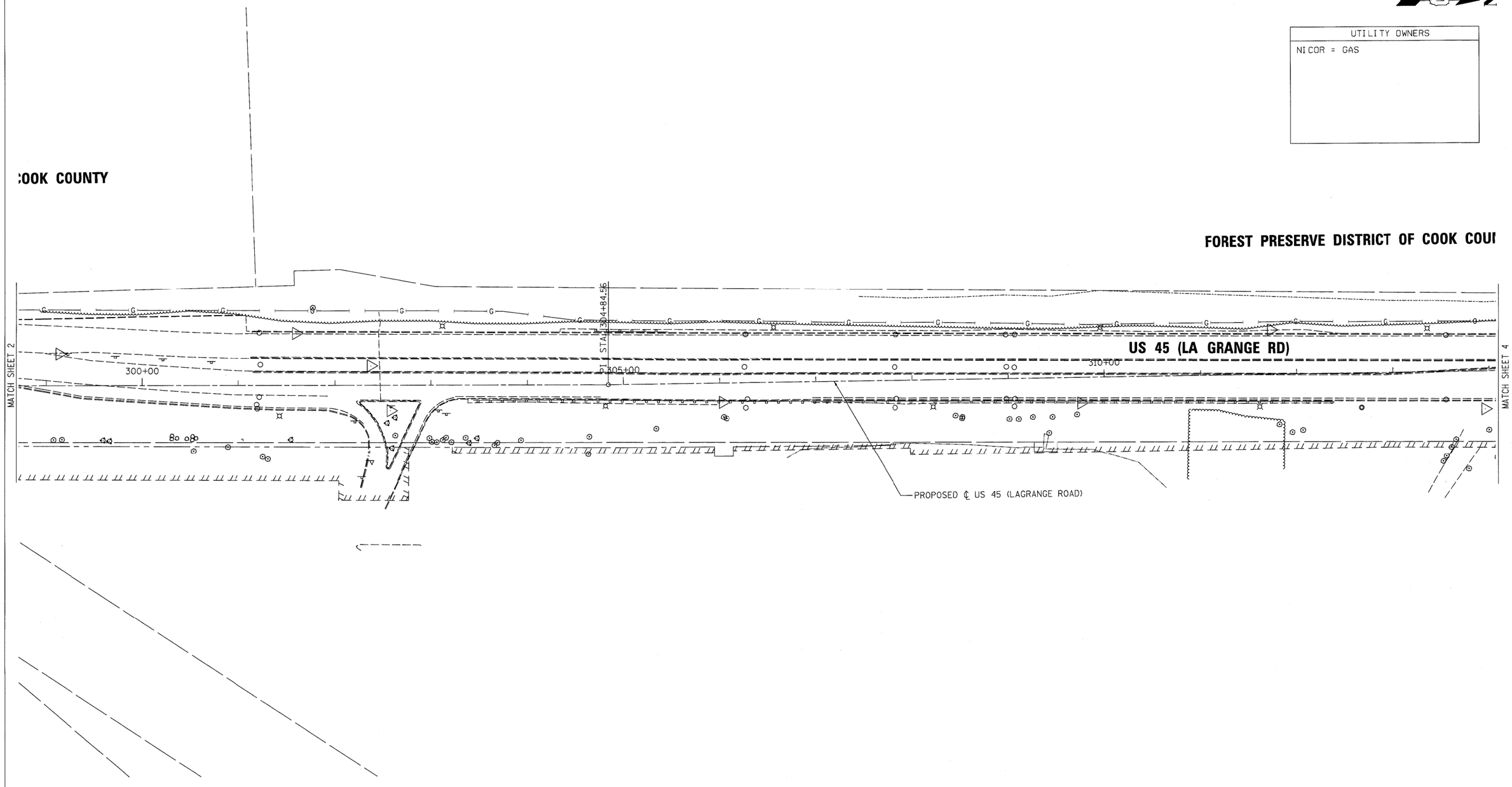

A	AERIAL UTILITY
	UNKNOWN
CTV	CABLE TV
T	TELEPHONE
G	GAS
E	ELECTRIC
W	WATER
FO	FIBER OPTIC
	SEWER
	TBE TEST HOLE

Utilities shown on these plans as depicted in the legend have been investigated by Cardno TBE in accordance with SUE Industry Standards. All other information shown has been provided to Cardno TBE by others. TBE's SUE field investigation was performed 12/18/10 through 1/18/11. Changes to utilities after 1/18/11 may have been made and therefore may result in variances from this plan. Consideration should be given to updating this plan if deemed advisable prior to final design and construction.

ALL UTILITIES SHOWN QUALITY LEVEL "B" UNLESS NOTED OTHERWISE.

20 0 METERS 20 40
50 0 FEET 50 100

LICENSED PROFESSIONAL ENGINEER
KENNETH F. SLANINKA, Jr.
062-055488
STATE OF ILLINOIS
signature
1/25/11
date
license expires 11-30-11

Cardno TBE
CIVIL ENGINEERING * TRANSPORTATION * ENVIRONMENTAL * PLANNING * UTILITY ENGINEERING/LOCATING

TBE Job No. IL09510425, 10429
SUE Plan Page: 3 of 11

Utility Quality Level "A" : Test Hole
Utility Quality Level "B" : Designating
Utility Quality Level "C" : Research with Survey
Utility Quality Level "D" : Records Research

DESIGNED EG	REVISED	
DRAWN KLC	REVISED	
CHECKED	REVISED	
DATE 1/20/11	REVISED	

STATE OF ILLINOIS
DEPARTMENT OF TRANSPORTATION

US RT.45 from 131st Street to 143rd Street
LaGrange, IL.

F.A.P. RTE.	SECTION	COUNTY	TOTAL SHEETS	SHEET NO.
330	103R-5	Cook	778	246
		Contract No. 60M62		
FED. ROAD DIST. NO.	ILLINOIS	IDOT Project No.		

UTILITY OWNERS
COMED = ELECTRIC COMCAST = CABLE TV AT&T = TELEPHONE AT&T = FIBER OPTIC NICOR = GAS VILLAGE OF ORLAND PARK = WATER NICOR = PIPELINE WEST SHORE = PIPELINE ONEOK = PIPELINE

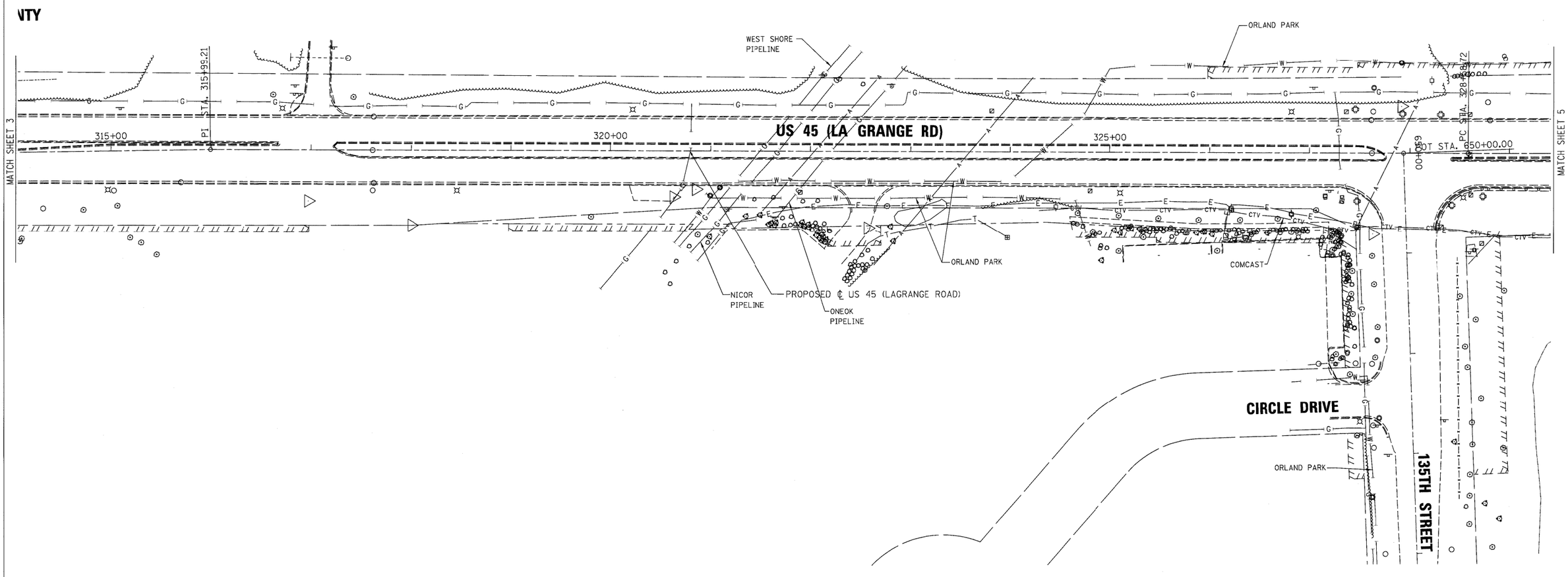

A — A	AERIAL UTILITY
	UNKNOWN
CTV — CTV	CABLE TV
T — T	TELEPHONE
G	GAS
E — E	ELECTRIC
W	WATER
FO — FO	FIBER OPTIC
	SEWER
	TBE TEST HOLE

Utilities shown on these plans as depicted in the legend have been investigated by Cardno TBE in cccordance with SUE Industry Standards. All other information shown has been provided to Cardno TBE by others. TBE's SUE field investigction was performed 12/18/10 through 1/18/11. Changes to utilities after 1/18/11 may have been made and therefore may result in variances from this plan. Consideration should be given to updating this plcn if deemed advisable prior to final design and construction.

ALL UTILITIES SHOWN QUALITY LEVE_ "B" UNLESS NOTED OTHERWISE.

20 0 METERS 20 40
50 0 FEET 50 100

LICENSED PROFESSIONAL ENGINEER
KENNETH F. SLANINKA, Jr.
062-055488
STATE OF ILLINOIS
signature
1/24/11
date
license expires 11-30-11

Cardno TBE
CIVIL ENGINEERING * TRANSPORTATION * ENVIRONMENTAL * PLANNING * UTILITY ENGINEERING/LOCATING

TBE Job No. IL09510425, 10429
SUE Plan Page: 4 of 11

Utility Quality Level "A" : Test Hole
Utility Quality Level "B" : Designating
Utility Quality Level "C" : Research with Survey
Utility Quality Level "D" : Records Research

DESIGNED EG	REVISED	
DRAWN KLC	REVISED	
CHECKED	REVISED	
DATE 1/20/11	REVISED	

STATE OF ILLINOIS
DEPARTMENT OF TRANSPORTATION

US RT.45 from 131st Street to 143rd Street
LaGrange, IL.

F.A.P RTE.	SECTION	COUNTY	TOTAL SHEETS	SHEET NO.
330	103R-5	Cook	778	247
		Contract No. 60M62		
FED. ROAD DIST. NO.	ILLINOIS	IDOT Project No.		

UTILITY OWNERS
COMED = ELECTRIC COMCAST = CABLE TV AT&T = TELEPHONE NICOR = GAS VILLAGE OF ORLAND PARK = WATER

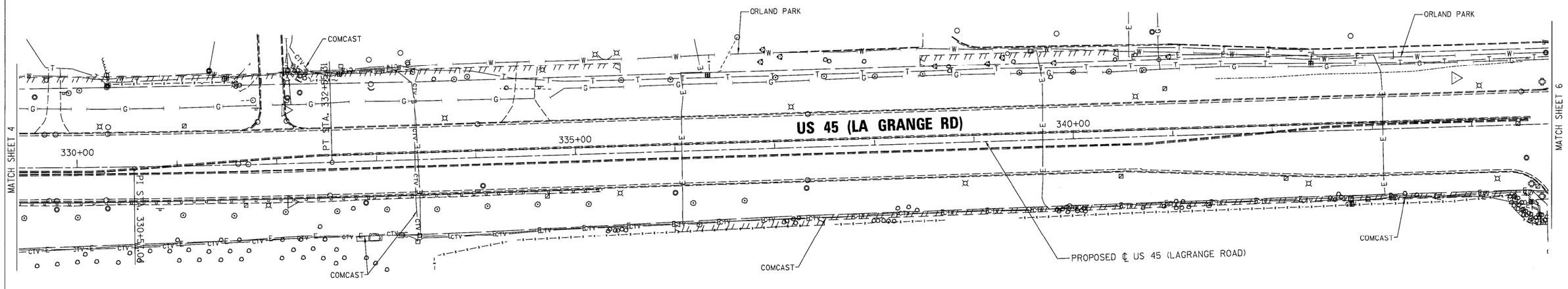

A — A	AERIAL UTILITY
- - - - - - - -	UNKNOWN
CTV — CTV	CABLE TV
T — T	TELEPHONE
G	GAS
E — E	ELECTRIC
W	WATER
FO — FO	FIBER OPTIC
	SEWER
	TBE TEST HOLE

Utilities shown on these plans as depicted in the legend have been investigated by Cardno TBE in cccordance with SUE Industry Standards. All other information shown has been provided to Cardno TBE by others. TBE's SUE field investigction was performed 12/18/10 through 1/18/11. Changes to utilities after 1/18/11 may have been made and therefore may result in variances from this plan. Consideration should be given to updating this plcn if deemed advisable prior to final design and construction.

ALL UTILITIES SHOWN QUALITY LEVE_ "B" UNLESS NOTED OTHERWISE.

20 0 METERS 20 40
50 0 FEET 50 100

LICENSED PROFESSIONAL ENGINEER
KENNETH F. SLANINKA, Jr.
062-055488
STATE OF ILLINOIS
signature
1/25/11
date
license expires 11-30-11

Cardno TBE
CIVIL ENGINEERING * TRANSPORTATION * ENVIRONMENTAL * PLANNING * UTILITY ENGINEERING/LOCATING

TBE Job No. IL09510425, 10429
SUE Plan Page: 5 of 11

Utility Quality Level "A" : Test Hole
Utility Quality Level "B" : Designating
Utility Quality Level "C" : Research with Survey
Utility Quality Level "D" : Records Research

DESIGNED	EG	REVISED
DRAWN	KLC	REVISED
CHECKED		REVISED
DATE	1/20/11	REVISED

STATE OF ILLINOIS
DEPARTMENT OF TRANSPORTATION

US RT.45 from 131st Street to 143rd Street
LaGrange, IL.

F.A.P RTE.	SECTION	COUNTY	TOTAL SHEETS	SHEET NO.
330	103R-5	Cook	778	248
		Contract No. 60M62		
FED. ROAD DIST. NO.	ILLINOIS	IDOT Project No.		

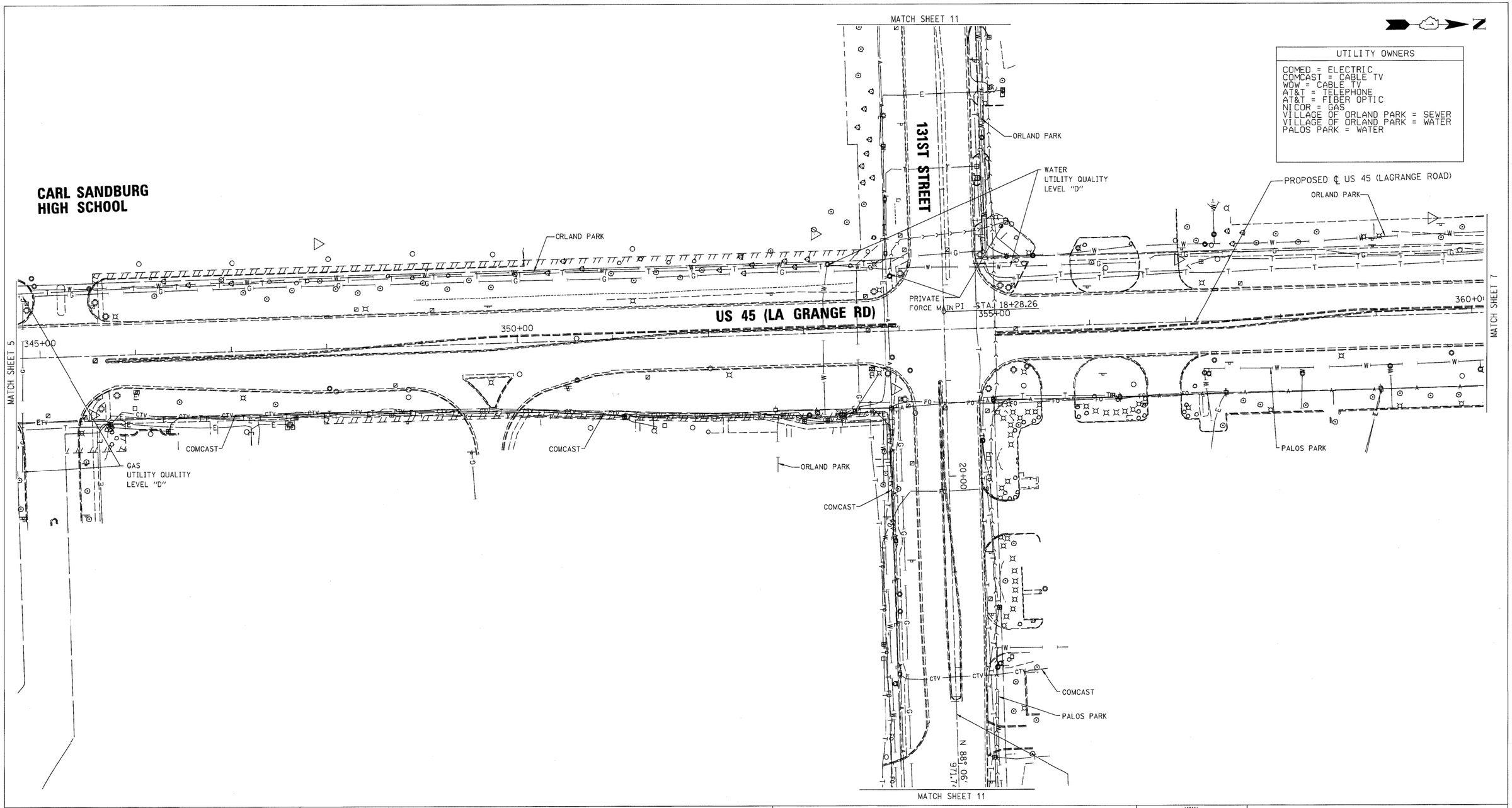

UTILITY OWNERS

COMED = ELECTRIC
COMCAST = CABLE TV
WOW = CABLE TV
AT&T = TELEPHONE
AT&T = FIBER OPTIC
NICOR = GAS
VILLAGE OF ORLAND PARK = SEWER
VILLAGE OF ORLAND PARK = WATER
PALOS PARK = WATER

A — A	AERIAL UTILITY
- - - - - - - -	UNKNOWN
CTV — CTV	CABLE TV
T — T	TELEPHONE
G	GAS
E — E	ELECTRIC
W	WATER
FO — FO	FIBER OPTIC
	SEWER
	TBE TEST HOLE

Utilities shown on these plans as depicted in the legend have been investigated by Cardno TBE in cccordance with SUE Industry Standards. All other information shown has been provided to Cardno TBE by others. TBE's SUE field investigction was performed 12/18/10 through 1/18/11. Changes to utilities after 1/18/11 may have been made and therefore may result in variances from this plan. Consideration should be given to updating this plcn if deemed advisable prior to final design and construction.

ALL UTILITIES SHOWN QUALITY LEVE_ "B" UNLESS NOTED OTHERWISE.

20 0 METERS 20 40
50 0 FEET 50 100

LICENSED PROFESSIONAL ENGINEER
KENNETH F. SLANINKA, Jr.
062-055488
STATE OF ILLINOIS
signature
1-25-11
date
license expires 11-30-11

Cardno TBE
CIVIL ENGINEERING * TRANSPORTATION * ENVIRONMENTAL * PLANNING * UTILITY ENGINEERING/LOCATING

TBE Job No. IL09510425, 10429
SUE Plan Page: 6 of 11

Utility Quality Level "A" : Test Hole
Utility Quality Level "B" : Designating
Utility Quality Level "C" : Research with Survey
Utility Quality Level "D" : Records Research

DESIGNED	EG	REVISED
DRAWN	KLC	REVISED
CHECKED		REVISED
DATE	1/20/11	REVISED

STATE OF ILLINOIS
DEPARTMENT OF TRANSPORTATION

US RT.45 from 131st Street to 143rd Street
LaGrange, IL.

F.A.P. RTE.	SECTION	COUNTY	TOTAL SHEETS	SHEET NO.
330	103R-5	Cook	778	249
		Contract No. 60M62		
FED. ROAD DIST. NO.	ILLINOIS	IDOT Project No.		

UTILITY OWNERS
COMED = ELECTRIC
AT&T = TELEPHONE
NICOR = GAS
VILLAGE OF ORLAND PARK = WATER
PALOS PARK = WATER
PEOPLES ENERGY = PIPELINE

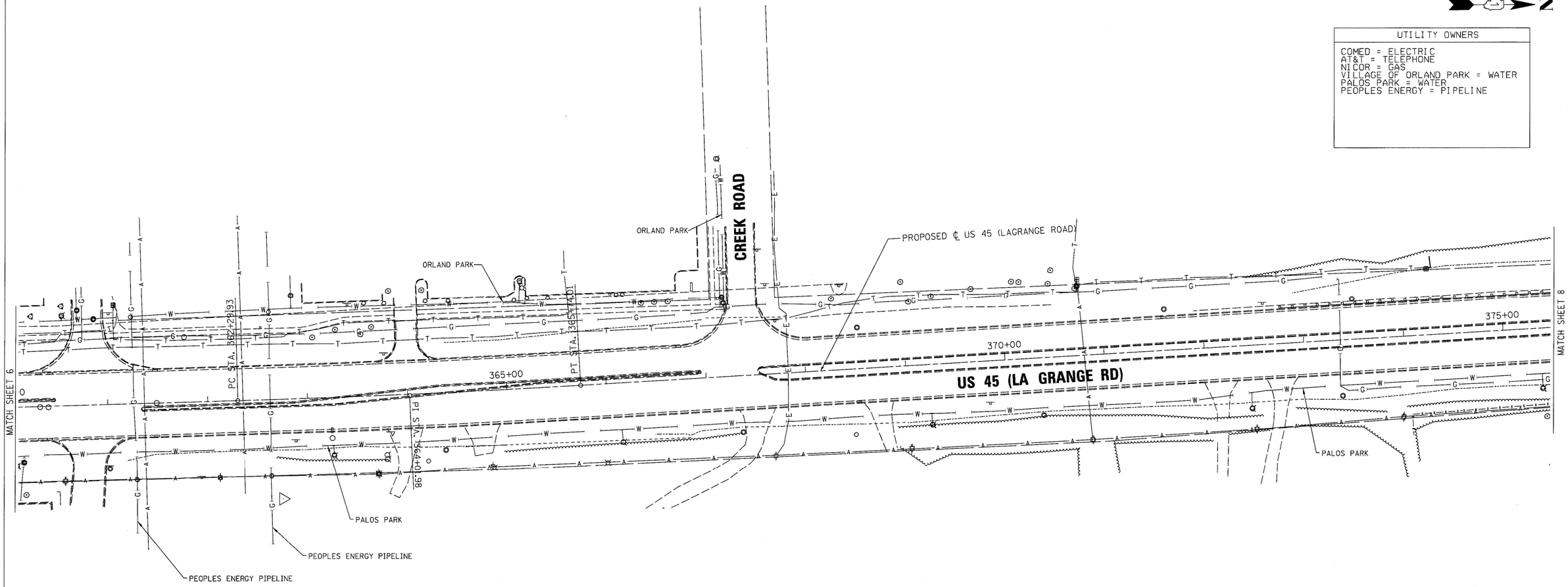

A — A	AERIAL UTILITY
- - - - - - - - - -	UNKNOWN
CTV — CTV	CABLE TV
T — T	TELEPHONE
G	GAS
E — E	ELECTRIC
W	WATER
FO — FO	FIBER OPTIC
	SEWER
	TBE TEST HOLE

Utilities shown on these plans as depicted in the legend have been investigated by Cardno TBE in accordance with SUE Industry Standards. All other information shown has been provided to Cardno TBE by others. TBE's SUE field investigation was performed 12/18/10 through 1/18/11. Changes to utilities after 1/18/11 may have been made and therefore may result in variances from this plan. Consideration should be given to updating this plan if deemed advisable prior to final design and construction.

ALL UTILITIES SHOWN QUALITY LEVEL "B" UNLESS NOTED OTHERWISE.

20 0 METERS 20 40
50 0 FEET 50 100

LICENSED PROFESSIONAL ENGINEER
KENNETH F. SLANINKA, Jr.
062-055488
STATE OF ILLINOIS
signature
1/25/11
date
license expires 11-30-11

Cardno TBE
CIVIL ENGINEERING * TRANSPORTATION * ENVIRONMENTAL * PLANNING * UTILITY ENGINEERING/LOCATING

TBE Job No. IL09510425. 10429
SUE Plan Page: 7 of 11

Utility Quality Level "A" : Test Hole
Utility Quality Level "B" : Designating
Utility Quality Level "C" : Research with Survey
Utility Quality Level "D" : Records Research

DESIGNED	EG	REVISED
DRAWN	KLC	REVISED
CHECKED		REVISED
DATE	1/20/11	REVISED

STATE OF ILLINOIS
DEPARTMENT OF TRANSPORTATION

US RT.45 from 131st Street to 143rd Street
LaGrange, IL.

F.A.P. RTE.	SECTION	COUNTY	TOTAL SHEETS	SHEET NO.
330	103R-5	Cook	778	250
		Contract No. 60M62		
FED. ROAD DIST. NO.	ILLINOIS	IDOT Project No.		

UTILITY OWNERS
COMED = ELECTRIC WOW = CABLE TV AT&T = TELEPHONE AT&T = FIBER OPTIC NICOR = GAS PALOS PARK = WATER

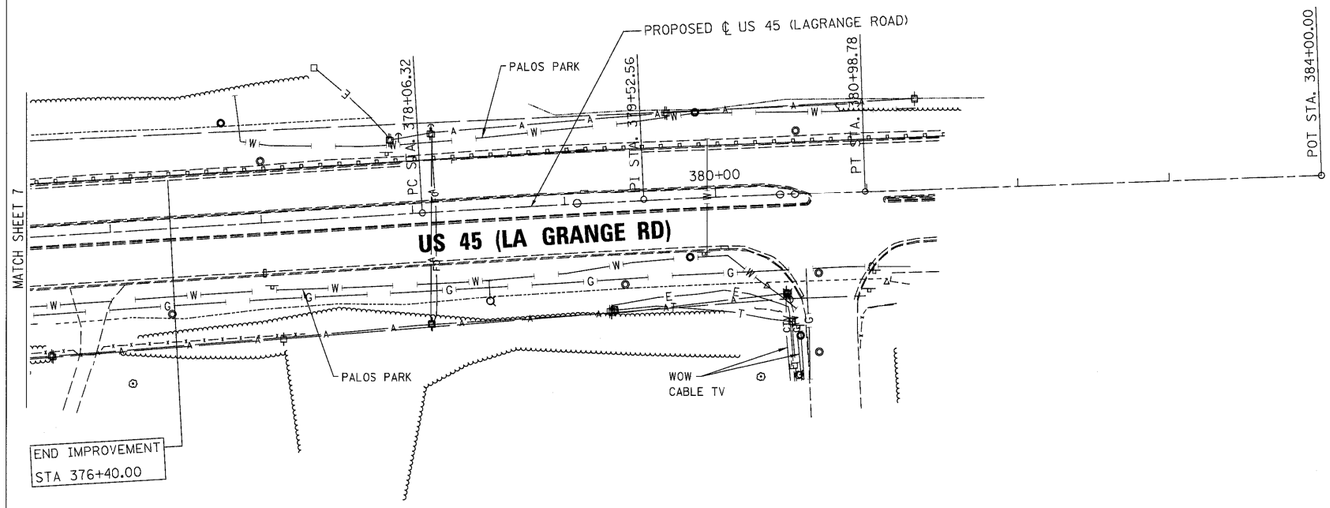

A	AERIAL UTILITY
	UNKNOWN
CTV	CABLE TV
T	TELEPHONE
G	GAS
E	ELECTRIC
W	WATER
FO	FIBER OPTIC
	SEWER
	TBE TEST HOLE

Utilities shown on these plans as depicted in the legend have been investigated by Cardno TBE in accordance with SUE Industry Standards. All other information shown has been provided to Cardno TBE by others. TBE's SUE field investigation was performed 12/18/10 through 1/18/11. Changes to utilities after 1/18/11 may have been made and therefore may result in variances from this plan. Consideration should be given to updating this plan if deemed advisable prior to final design and construction.

ALL UTILITIES SHOWN QUALITY LEVEL "B" UNLESS NOTED OTHERWISE.

20 0 METERS 20 40
50 0 FEET 50 100

LICENSED PROFESSIONAL ENGINEER
KENNETH F. SLANINKA, Jr.
062-055488
STATE OF ILLINOIS
signature
1/25/11
date
license expires 11-30-11

Cardno TBE
CIVIL ENGINEERING * TRANSPORTATION * ENVIRONMENTAL * PLANNING * UTILITY ENGINEERING/LOCATING

TBE Job No. IL09510425, 10429
SUE Plan Page: 8 of 11

Utility Quality Level "A" : Test Hole
Utility Quality Level "B" : Designating
Utility Quality Level "C" : Research with Survey
Utility Quality Level "D" : Records Research

DESIGNED	EG	REVISED
DRAWN	KLC	REVISED
CHECKED		REVISED
DATE	1/20/11	REVISED

STATE OF ILLINOIS
DEPARTMENT OF TRANSPORTATION

US RT.45 from 131st Street to 143rd Street
LaGrange, IL.

F.A.P RTE.	SECTION	COUNTY	TOTAL SHEETS	SHEET NO.
330	103R-5	Cook	778	251
		Contract No. 60M62		
FED. ROAD DIST. NO.	ILLINOIS	IDOT Project No.		

UTILITY OWNERS
COMCAST = CABLE TV NICOR = GAS VILLAGE OF ORLAND PARK = WATER

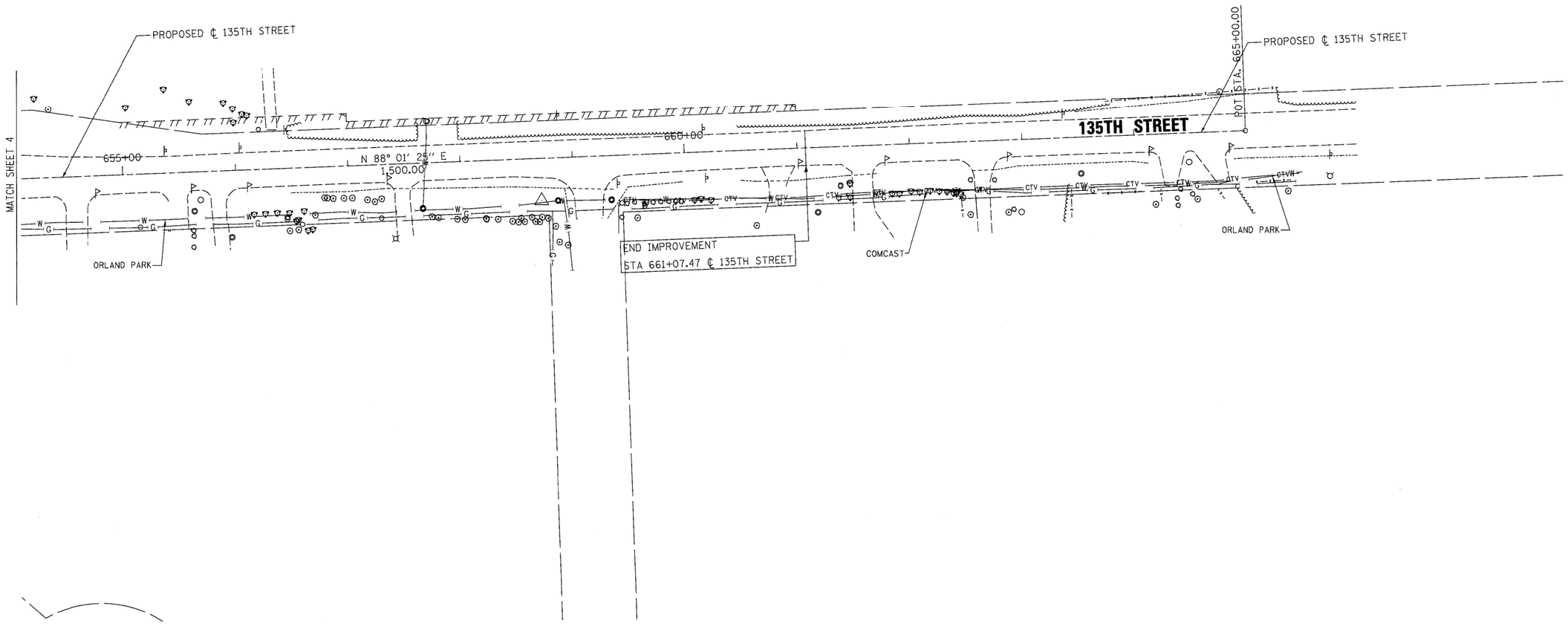

A	AERIAL UTILITY
	UNKNOWN
CTV	CABLE TV
T	TELEPHONE
G	GAS
E	ELECTRIC
W	WATER
FO	FIBER OPTIC
	SEWER
	TBE TEST HOLE

Utilities shown on these plans as depicted in the legend have been investigated by Cardno TBE in accordance with SUE Industry Standards. All other information shown has been provided to Cardno TBE by others. TBE's SUE field investigation was performed 12/18/10 through 1/18/11. Changes to utilities after 1/18/11 may have been made and therefore may result in variances from this plan. Consideration should be given to updating this plan if deemed advisable prior to final design and construction.

ALL UTILITIES SHOWN QUALITY LEVEL "B" UNLESS NOTED OTHERWISE.

20 0 METERS 20 40
50 0 FEET 50 100

LICENSED PROFESSIONAL ENGINEER
KENNETH F. SLANINKA, Jr.
062-055483
STATE OF ILLINOIS
signature
1/25/11
date
license expires 11-30-11

Cardno TBE
CIVIL ENGINEERING * TRANSPORTATION * ENVIRONMENTAL * PLANNING * UTILITY ENGINEERING/LOCATING

TBE Job No. IL09510425, 10429
SUE Plan Page: 9 of 11

Utility Quality Level "A" : Test Hole
Utility Quality Level "B" : Designating
Utility Quality Level "C" : Research with Survey
Utility Quality Level "D" : Records Research

DESIGNED EG	REVISED	
DRAWN KLC	REVISED	
CHECKED	REVISED	
DATE 1/20/11	REVISED	

STATE OF ILLINOIS
DEPARTMENT OF TRANSPORTATION

US RT.45 from 131st Street to 143rd Street
LaGrange, IL.

F.A.P RTE.	SECTION	COUNTY	TOTAL SHEETS	SHEET NO.
330	103R-5	Cook	778	251A
		Contract No. 60M62		
FED. ROAD DIST. NO.	ILLINOIS	IDOT Project No.		

UTILITY OWNERS
COMED = ELECTRIC
AT&T = TELEPHONE
NICOR = GAS
VILLAGE OF ORLAND PARK = SEWER
VILLAGE OF ORLAND PARK = WATER

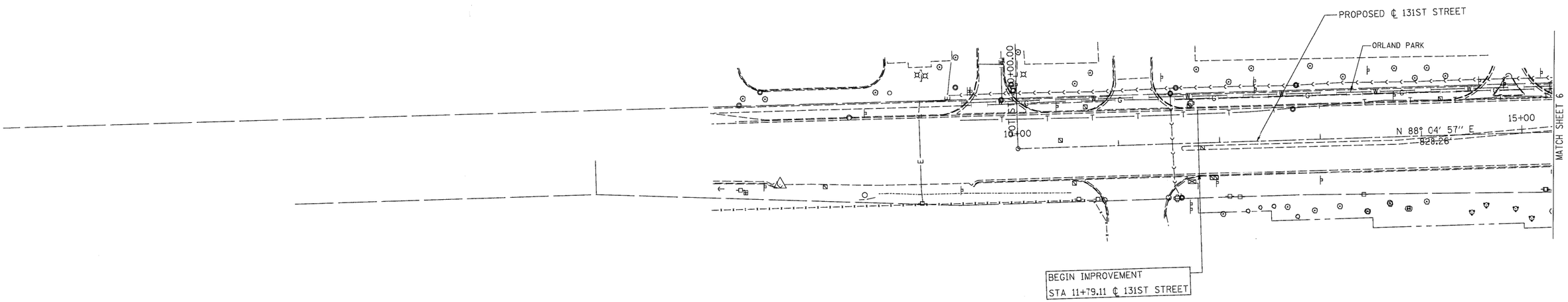

A	AERIAL UTILITY
	UNKNOWN
CTV	CABLE TV
T	TELEPHONE
G	GAS
E	ELECTRIC
W	WATER
FO	FIBER OPTIC
	SEWER
	TBE TEST HOLE

Utilities shown on these plans as depicted in the legend have been investigated by Cardno TBE in accordance with SUE Industry Standards. All other information shown has been provided to Cardno TBE by others. TBE's SUE field investigation was performed 12/18/10 through 1/18/11. Changes to utilities after 1/18/11 may have been made and therefore may result in variances from this plan. Consideration should be given to updating this plan if deemed advisable prior to final design and construction.

ALL UTILITIES SHOWN QUALITY LEVEL "B" UNLESS NOTED OTHERWISE.

20 0 METERS 20 40
50 0 FEET 50 100

LICENSED PROFESSIONAL ENGINEER
KENNETH F. SLANINKA, Jr.
062-055483
STATE OF ILLINOIS
signature
1/25/11
date
license expires 11-30-11

Cardno TBE
CIVIL ENGINEERING * TRANSPORTATION * ENVIRONMENTAL * PLANNING * UTILITY ENGINEERING/LOCATING

TBE Job No. IL09510425, 10429
SUE Plan Page: 10 of 11

Utility Quality Level "A" : Test Hole
Utility Quality Level "B" : Designating
Utility Quality Level "C" : Research with Survey
Utility Quality Level "D" : Records Research

DESIGNED	EG	REVISED
DRAWN	KLC	REVISED
CHECKED		REVISED
DATE	1/20/11	REVISED

STATE OF ILLINOIS
DEPARTMENT OF TRANSPORTATION

US RT.45 from 131st Street to 143rd Street
LaGrange, IL.

F.A.P RTE.	SECTION	COUNTY	TOTAL SHEETS	SHEET NO.
330	103R-5	Cook	778	251B
		Contract No. 60M62		
FED. ROAD DIST. NO.	ILLINOIS	IDOT Project No.		

UTILITY OWNERS
AT&T = TELEPHONE
NICOR = GAS
VILLAGE OF ORLAND PARK = SEWER
VILLAGE OF ORLAND PARK = WATER
PALOS PARK = WATER

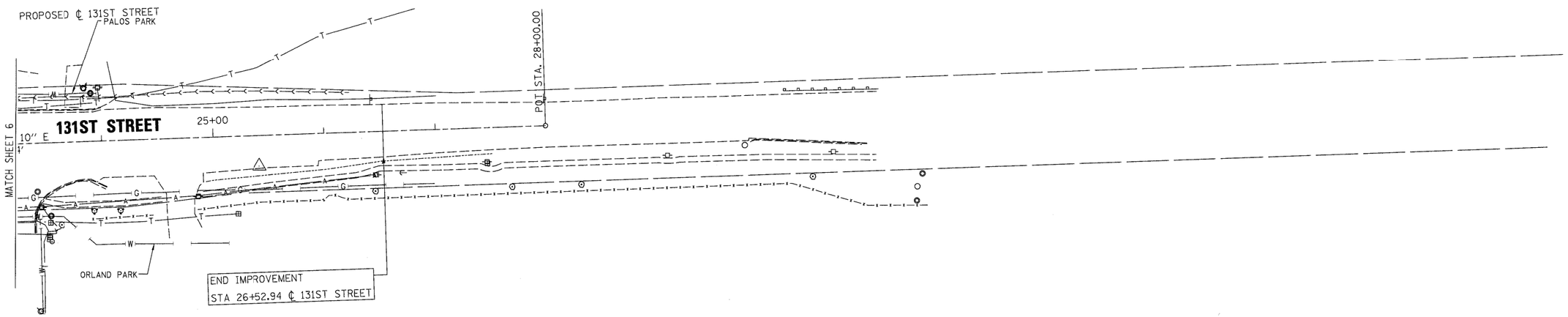

A — A	AERIAL UTILITY
- - - - - - - - - -	UNKNOWN
CTV — CTV	CABLE TV
T — T	TELEPHONE
G	GAS
E — E	ELECTRIC
W	WATER
FO — FO	FIBER OPTIC
	SEWER
	TBE TEST HOLE

Utility Quality Level "A" : Test Hole
Utility Quality Level "B" : Designating
Utility Quality Level "C" : Research with Survey
Utility Quality Level "D" : Records Research

Utilities shown on these plans as depicted in the legend have been investigated by Cardno TBE in accordance with SUE Industry Standards. All other information shown has been provided to Cardno TBE by others. TBE's SUE field investigation was performed 12/18/10 through 1/18/11. Changes to utilities after 1/18/11 may have been made and therefore may result in variances from this plan. Consideration should be given to updating this plan if deemed advisable prior to final design and construction.

ALL UTILITIES SHOWN QUALITY LEVEL "B" UNLESS NOTED OTHERWISE.

20 0 METERS 20 40
50 0 FEET 50 100

LICENSED PROFESSIONAL ENGINEER
KENNETH F. SLANINKA, Jr.
062-055488
STATE OF ILLINOIS
signature
1/25/11
date
license expires 11-30-11

Cardno TBE
CIVIL ENGINEERING * TRANSPORTATION * ENVIRONMENTAL * PLANNING * UTILITY ENGINEERING/LOCATING

TBE Job No. IL09510425, 10429
SUE Plan Page: 11 of 11

DESIGNED	EG	REVISED
DRAWN	KLC	REVISED
CHECKED		REVISED
DATE	1/20/11	REVISED

STATE OF ILLINOIS
DEPARTMENT OF TRANSPORTATION

US RT.45 from 131st Street to 143rd Street
LaGrange, IL.

F.A.P RTE.	SECTION	COUNTY	TOTAL SHEETS	SHEET NO.
330	103R-5	Cook	778	251C
		Contract No. 60M62		
FED. ROAD DIST. NO.	ILLINOIS	IDOT Project No.		

PT OF SW 1/4 OF SEC 3 & SE 1/4 OF SEC 4, T36N, R12E OF THE 3RD PM, COOK CO. IL

PARCEL No.	OWNER	TOTAL HOLDINGS (ACRES)	PART TAKEN (ACRES)	PREVIOUSLY DEDICATED (ACRES)	REMAINDER (ACRES)	EASEMENT AREA (ACRES)	PERMANENT INDEX NUMBER	PURPOSE OF EASMENT	ACQUIRED BY
0H40067	MAIN-PLACE-ORLAND PARK ASSOCIATES III, L.L.C.	1.306	0.018	0.000	1.288	0.017	27-03-300-022	TEMPORARY	
0H40068	MAIN-PLACE-ORLAND PARK ASSOCIATES III, L.L.C.	1.296	0.033	0.000	1.263	0.000	27-03-300-023	N/A	
0H40069	MAIN-PLACE-ORLAND PARK ASSOCIATES III, L.L.C.	5.882	281 SQ. FT. 0.006 AC	0.000	5.876	0.000	27-03-300-026	N/A	
0H40096	VILLAGE OF ORLAND PARK	7.393	0.046	0.000	7.347	0.000	27-04-417-019 27-04-417-020	N/A	
0H40096TE-A		N/A	N/A	N/A	N/A	0.098	27-04-417-018 27-04-417-019 27-04-417-020 27-04-417-027	TEMPORARY	

F.A.P. ROUTE	SECTION	COUNTY	TOTAL SHEETS	SHEET NO.
330/US 45	131st St to 179th St	COOK	778	252
STATION 275+00 TO STATION 288+00				
FED. ROAD DIST. NO. 1		ILLINOIS	FED. AID PROJECT	

SEE SHEET 52 FOR COORDINATE VALUES FOR CENTERLINE POINTS, SECTIONS CORNERS AND ROW MONUMENTS

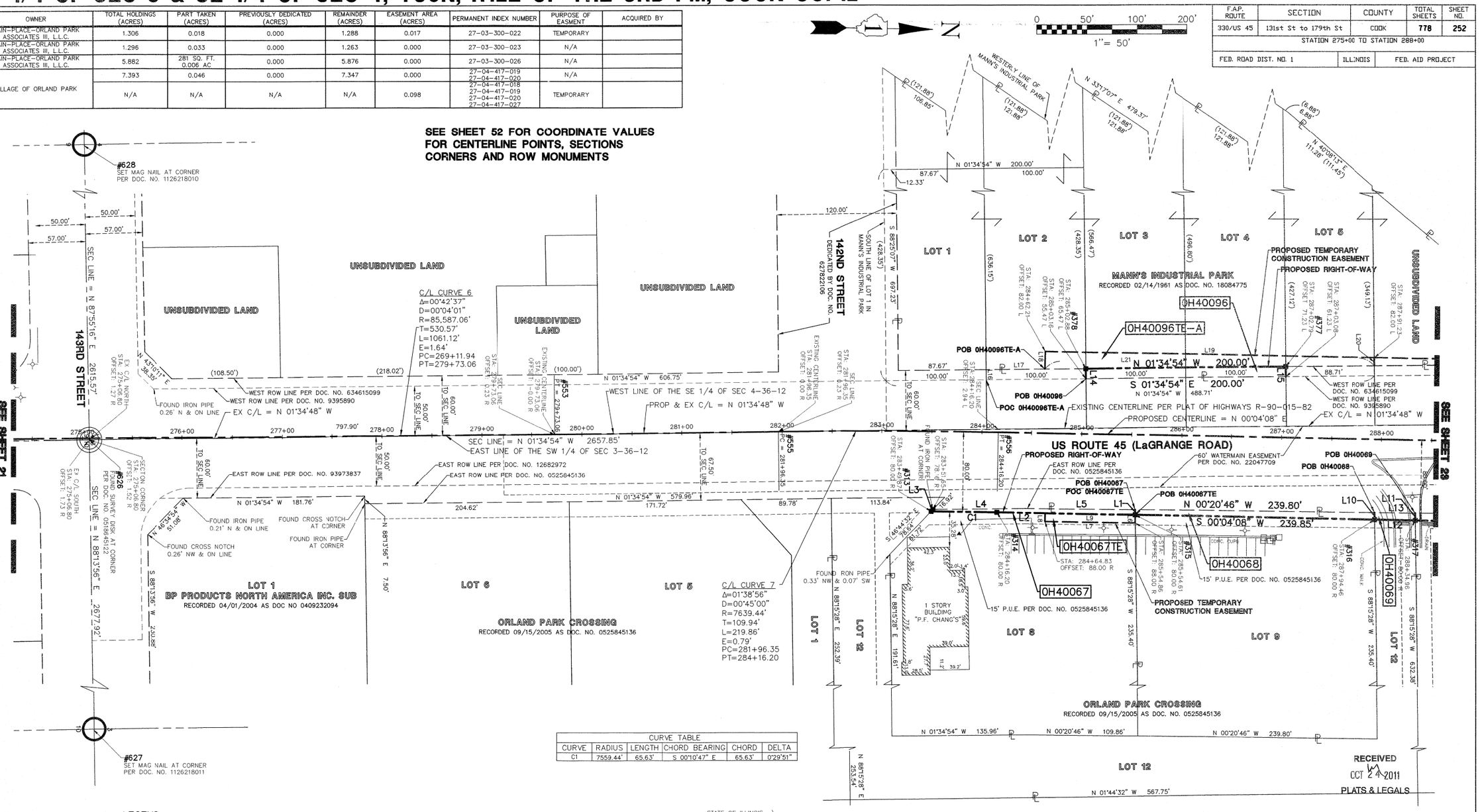

CURVE TABLE					
CURVE	RADIUS	LENGTH	CHORD BEARING	CHORD	DELTA
C1	7559.44'	65.63'	S 00°10'47" E	65.63'	0°29'51"

LINE TABLE		
LINE	BEARING	LENGTH
L1	N 88°15'28" E	5.05'
L2	S 00°04'08" W	138.41'
L3	N 46°44'32" W	2.54'
L4	N 01°34'54" W	93.59'
L5	N 00°20'46" W	108.59'
L6	N 88°15'28" E	8.00'
L7	S 00°04'08" W	90.03'
L8	N 89°55'52" W	8.00'
L9	N 00°04'08" E	89.77'
L10	N 88°15'28" E	6.79'
L11	N 88°15'28" E	7.09'
L12	S 00°04'08" W	40.51'
L13	N 00°20'46" W	40.50'
L14	S 88°25'06" W	10.00'
L15	N 88°25'06" E	10.00'
L16	S 88°25'06" W	10.00'
L17	N 01°34'54" W	59.32'
L18	N 89°55'52" W	17.71'
L19	N 00°04'08" E	329.02'
L20	N 88°25'06" E	8.22'
L21	S 01°34'54" E	329.39'

LEGEND

- SECTION CORNER
- QUARTER SECTION CORNER
- SECTION LINE
- QUARTER SECTION LINE
- QUARTER, QUARTER SECTION LINE
- PLATTED LOT LINE
- PROPERTY (DEED) LINE
- CENTERLINE
- EXISTING RIGHT-OF-WAY LINE
- PROPOSED RIGHT-OF-WAY LINE
- PROPOSED EASEMENT
- 129.32' MEASURED DIMENSION
- 129.32'(COMP.) COMPUTED DIMENSION
- ( ) RECORD DATA
- EXISTING BUILDING
- EX. CONCRETE CURB & GUTTER
- EX. EDGE OF PAVEMENT
- EX. GUARD RAIL
- PK NAIL SET
- REPLACED AFTER CONSTRUCTION
- IRON ROD SET
- IRON PIPE OR ROD FOUND
- CUT CROSS FOUND OR SET
- T1 T2 T3 **THESE STAKES REFERENCE FOUND OR SET MONUMENTATION.** WITNESS POINTS SET TO AID IN THE RECOVERY AND ESTABLISHMENT OF THE PROPOSED CENTERLINE OF CONSTRUCTION.
- **STAKING OF PROPOSED RIGHT OF WAY.** MARKER TO MONUMENT THE POSITION SHOWN. IDENTIFIED BY INSCRIPTION DATA AND SURVEYORS REGISTRATION NUMBER.
- POB POINT OF BEGINNING
- POC POINT OF COMMENCEMENT
- EX. MISCELLANEOUS MANHOLE (MH)
- EX. STORM MANHOLE (MH)
- EX. STORM CATCH BASIN (CB)
- EX. STORM INLET (INL)
- EX. FLARED END SECTION (FES)
- EX. SANITARY MANHOLE (SMH)
- EX. FIRE HYDRANT/AUX. VALVE
- EX. VALVE BOX
- EX. VALVE VAULT (V.V.)
- EX. IRRIGATION CONTROL BOX
- EX. ELECTRICAL METER
- EX. ELECTRICAL OUTLET
- EX. UTILITY POLE
- EX. UTILITY POLE WITH LIGHT
- EX. GUY WIRE
- EX. LIGHT STANDARD
- EX. STREET LIGHT
- EX. GROUND LIGHT
- EX. SIGN
- EX. DOUBLE POLE SIGN
- EX. MAILBOX
- EX. BOLLARD
- EX. FLAG POLE

STATE OF ILLINOIS)
) SS
COUNTY OF DuPAGE)

I, WILLIAM W. WRIGHT, DO HEREBY DECLARE THAT I HAVE SURVEYED THE PLAT OF HIGHWAYS SHOWN HEREON IN SECTIONS 33 AND 34, TOWNSHIP 37 NORTH, RANGE 12 EAST OF THE THIRD PRINCIPAL MERIDIAN, AND SECTIONS 3, 4, 9, 10, 15, 16, 21, 22, 27, 28, 33 AND 34, TOWNSHIP 36 NORTH, RANGE 12 EAST OF THE THIRD PRINCIPAL MERIDIAN, ALL IN COOK COUNTY, ILLINOIS; THAT THE SURVEY IS TRUE AND COMPLETE AS SHOWN TO THE BEST OF MY KNOWLEDGE AND BELIEF; THAT THE PLAT CORRECTLY REPRESENTS SAID SURVEY; THAT ALL MONUMENTS FOUND AND ESTABLISHED ARE OF PERMANENT QUALITY AND OCCUPY THE POSITIONS SHOWN THEREON AND THAT THE MONUMENTS ARE SUFFICIENT TO ENAELE THE SURVEY TO BE RETRACED. MADE FOR THE DEPARTMENT OF TRANSPORTATION, STATE OF ILLINOIS.

DATED AT LOMBARD, ILLINOIS THIS 17TH DAY OF OCTOBER A.D., 2011.

ILLINOIS PROFESSIONAL LAND SURVEYOR NO. 3502
LICENSE EXPIRES NOVEMBER 30, 2012

DESIGN FIRM LICENSE NO. 184003350
LICENSE EXPIRES APRIL 30, 2013

WILLIAM W. WRIGHT 3502 PROFESSIONAL LAND SURVEYOR STATE OF ILLINOIS LOMBARD, ILLINOIS

BEARINGS SHOWN HEREON ARE BASED ON ILLINOIS STATE PLANE COORDINATES, EAST ZONE, NORTH AMERICAN DATUM OF 1983. ALL COORDINATE AND DIMENSIONAL VALUES SHOWN HEREON ARE "GROUND" NOT "GRID".

COMBINED SCALE FACTOR (GROUND TO GRID) = 0.999966013

REVISION DATE	DESCRIPTION	INITIALS
10/17/11	ISSUED FINAL SURVEY TO IDOT	WWW
07/27/11	ADDED POINT NUMBERS FOR COORDINATE TABLE	WWW
08/13/10	REVISED PER IDOT REVIEW	WWW

R.O.W. PLAT	BY	DATE
MADE		
CHECKED		
INKED		
NOTEBOOK NO.		

October 5, 2011 - 08:53 Dwg Name: P:\Idot14\dwg\Sun\Final Drawings\Plat of Highways\32-STA-275-288.dwg Updated By: bwright

RECEIVED
OCT 24 2011
PLATS & LEGALS

IDOT14 — 090746

SHEET 1 IS A COVER SHEET AND IS NOT RECORDED

Manhard CONSULTING LTD
750 Springer Drive, Lombard, IL 60148 ph 630.691.8500 fx 630.691.8585 manhard.com
Civil Engineers • Surveyors • Water Resource Engineers • Water & Wastewater Engineers
Construction Managers • Environmental Scientists • Landscape Architects • Planners

PLAT OF HIGHWAYS
STATE OF ILLINOIS
DEPARTMENT OF TRANSPORTATION

FAP 330/US ROUTE 45

SECTION: 131st St to 179th St COOK COUNTY

PROJECT: JOB NO. R-90-004-07

STATION 275+00 TO STATION 288+00

SCALE: 1" = 50' SHEET 22 OF 55

BUREAU OF LAND ACQUISITION
201 WEST CENTER COURT
SCHAUMBURG, ILLINOIS 60196

PT OF SW 1/4 SEC 3 & PT OF SE 1/4 SEC 4, T36N, R12E OF THE 3RD PM, COOK CO. IL

PARCEL No.	OWNER	TOTAL HOLDINGS (ACRES)	PART TAKEN (ACRES)	PREVIOUSLY DEDICATED (ACRES)	REMAINDER (ACRES)	EASEMENT AREA (ACRES)	PERMANENT INDEX NUMBER	PURPOSE OF EASEMENT	ACQUIRED BY
0H40001PE-1	NORFOLK SOUTHERN RAILWAY COMPANY	N/A	N/A	N/A	N/A	0.026	27-03-500-001	PERMANENT	
0H40001PE-2						0.254		PERMANENT	
0H40070	MAIN-PLACE-ORLAND PARK ASSOCIATES III, L.L.C.	5.829	326 SQ. FT. 0.007 ACRES	0.000	5.822	0.000	27-03-300-027	N/A	
0H40070TE		N/A	N/A	N/A	N/A	0.046		TEMPORARY	
0H40071	14035 LAGRANGE ROAD, L.L.C.	1.968	0.095	0.000	1.873	0.000	27-03-300-024 27-03-300-025	N/A	
0H0071TE		N/A	N/A	N/A	N/A	0.052	27-03-300-025	TEMPORARY	
0H40072	MAIN-PLACE-ORLAND PARK ASSOCIATES III, L.L.C.	10.119	377 SQ. FT. 0.009 ACRES	0.000	10.110	0.000	27-03-300-017	N/A	
0H40073	ROBERT G. DAY	0.086	283 SQ. FT. 0.006 ACRES	0.000	0.080	0.050	27-03-300-002	TEMPORARY	
0H40074	HOLDA ENTERPRISES, INC.	3.372	0.057	0.000	3.315	0.000	27-03-300-004 27-03-100-005	N/A	
0H40074TE-A		N/A	N/A	N/A	N/A	0.386		TEMPORARY	
0H40096TE-B	VILLAGE OF ORLAND PARK	N/A	N/A	N/A	N/A	1.110	27-04-417-030-8001 27-04-417-030-8002	TEMPORARY	

F.A.P. ROUTE	SECTION	COUNTY	TOTAL SHEETS	SHEET NO.
330/US 45	131st St to 179th St	COOK	778	252A
STATION 288+00 TO STATION 302+00				
FED. ROAD DIST. NO. 1	ILLINOIS	FED. AID PROJECT		

0 50' 100' 200'
1" = 50'

SEE SHEET 52 FOR COORDINATE VALUES FOR CENTERLINE POINTS, SECTIONS CORNERS AND ROW MONUMENTS

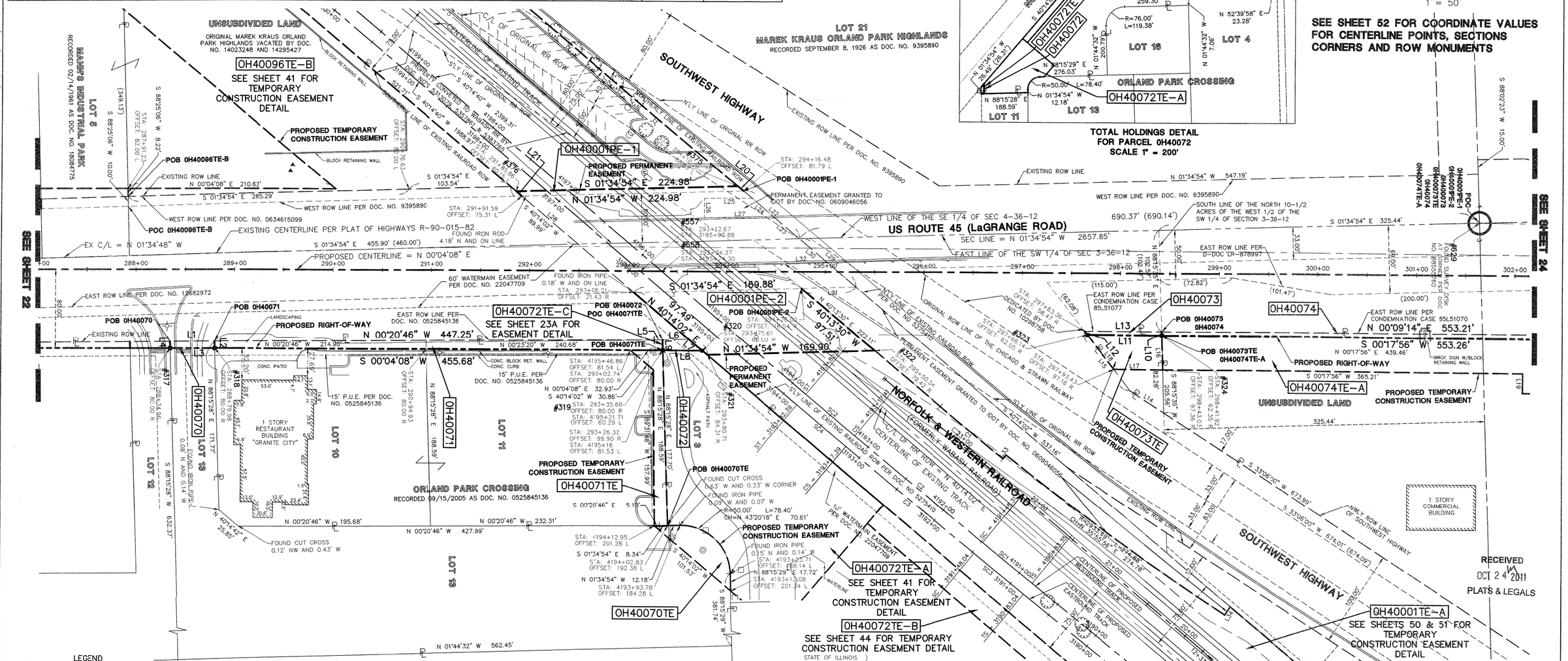

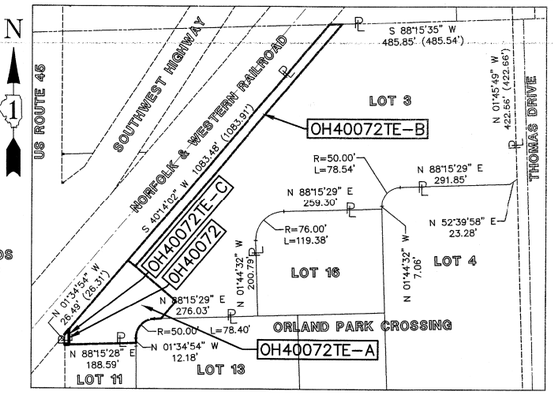

TOTAL HOLDINGS DETAIL FOR PARCEL 0H40072
SCALE 1" = 200'

RECEIVED
OCT 24 2011
PLATS & LEGALS

SHEET 1 IS A COVER SHEET AND IS NOT RECORDED

LEGEND

- SECTION CORNER
- QUARTER SECTION CORNER
- SECTION LINE
- QUARTER SECTION LINE
- QUARTER, QUARTER SECTION LINE
- PLATTED LOT LINE
- PROPERTY (DEED) LINE
- CENTERLINE
- EXISTING RIGHT-OF-WAY LINE
- PROPOSED RIGHT-OF-WAY LINE
- PROPOSED EASEMENT
- 129.32' MEASURED DIMENSION
- 129.32'(COMP.) COMPUTED DIMENSION
- ( ) RECORD DATA
- EXISTING BUILDING
- EX. CONCRETE CURB & GUTTER
- EX. EDGE OF PAVEMENT
- PK NAIL SET
- REPLACED AFTER CONSTRUCTION
- IRON ROD SET
- IRON PIPE OR ROD FOUND
- CUT CROSS FOUND OR SET
- T1, T2, T3 **THESE STAKES REFERENCE FOUND OR SET MONUMENTATION.** WITNESS POINTS SET TO AID IN THE RECOVERY AND ESTABLISHMENT OF THE PROPOSED CENTERLINE OF CONSTRUCTION.
- **STAKING OF PROPOSED RIGHT OF WAY.** MARKER TO MONUMENT THE POSITION SHOWN. IDENTIFIED BY INSCRIPTION DATA AND SURVEYORS REGISTRATION NUMBER.
- POB POINT OF BEGINNING
- POC POINT OF COMMENCEMENT
- EX. MISCELLANEOUS MANHOLE (MH)
- EX. STORM MANHOLE (MH)
- EX. STORM CATCH BASIN (CB)
- EX. STORM INLET (INL)
- EX. FLARED END SECTION (FES)
- EX. SANITARY MANHOLE (SMH)
- EX. FIRE HYDRANT/AUX. VALVE
- EX. VALVE BOX
- EX. VALVE VAULT (V.V.)
- EX. IRRIGATION CONTROL BOX
- EX. ELECTRICAL METER
- EX. ELECTRICAL OUTLET
- EX. UTILITY POLE
- EX. UTILITY POLE WITH LIGHT
- EX. GUY WIRE
- EX. LIGHT STANDARD
- EX. STREET LIGHT
- EX. GROUND LIGHT
- EX. SIGN
- EX. DOUBLE POLE SIGN
- EX. MAILBOX
- EX. BOLLARD
- EX. FLAG POLE
- EX. GUARD RAIL

LINE	BEARING	LENGTH	LINE	BEARING	LENGTH
L1	N 00°20'46" W	45.01'	L18	S 52°12'54" W	44.47'
L2	N 88°15'28" E	7.41'	L19	N 89°42'04" W	20.00'
L3	S 00°04'08" W	45.02'	L27	S 40°14'02" E	72.01'
L4	S 88°15'28" W	7.09'	L21	N 40°14'02" E	7.50'
L5	N 01°34'54" W	8.34'	L22	S 40°14'02" W	74.99'
L6	N 01°34'54" W	26.49'	L23	S 40°14'02" W	32.53'
L7	N 40°14'02" E	18.06'	L24	S 40°14'02" W	31.00'
L8	S 00°04'08" W	39.94'	L25	S 00°03'47" W	48.32'
L9	S 88°15'28" W	10.89'	L26	S 89°56'13" E	20.00'
L10	N 88°15'35" E	3.77'	L27	N 40°14'02" E	72.01'
L11	S 00°17'56" W	75.78'	L28	S 40°14'02" W	74.99'
L12	S 52°12'54" W	4.54'	L29	N 40°14'02" E	74.99'
L13	N 00°09'14" E	78.44'	L30	N 40°14'02" E	37.00'
L14	S 33°06'00" W	41.07'	L31	S 01°34'54" E	55.10'
L15	S 52°12'54" W	75.95'	L32	S 02°14'34" E	54.41'
L16	N 88°15'35" E	35.02'	L33	N 51°23'04" W	5.00'
L17	S 00°17'56" W	49.60'	L34	N 56°45'10" W	10.00'

SPIRAL CURVE TABLE										
CURVE	RADIUS	LENGTH	THETA	X	Y	S TANGENT	L TANGENT	P	K	A
SC1	11445.19	64.96	0°09'45"	64.96	0.06	21.65	43.31	0.02	32.48	862.25
SC2	-11445.19	64.96	0°09'45"	64.96	0.06	21.65	43.31	0.02	32.48	862.25
SC3	11459.19	65.00	0°09'45"	65.00	0.06	21.67	43.33	0.02	32.50	863.05
SC4	-11459.19	65.00	0°09'45"	65.00	0.06	21.67	43.33	0.02	32.50	863.05

CURVE TABLE					
CURVE	RADIUS	LENGTH	CHORD BEARING	CHORD	DELTA
C1	2938.69'	82.55'	N 39°25'13" E	82.55'	1°36'34"
C2	11445.19'	169.10'	N 39°39'31" E	169.10'	0°50'48"
C3	11459.19'	169.35'	N 39°39'31" E	169.34'	0°50'48"

STATE OF ILLINOIS)
) SS
COUNTY OF DuPAGE)

I, WILLIAM W. WRIGHT, DO HEREBY DECLARE THAT I HAVE SURVEYED THE PLAT OF HIGHWAYS SHOWN HEREON IN SECTIONS 33 AND 34, TOWNSHIP 37 NORTH, RANGE 12 EAST OF THE THIRD PRINCIPAL MERIDIAN, AND SECTIONS 3, 4, 9, 10, 15, 16, 21, 22, 27, 28, 33 AND 34, TOWNSHIP 36 NORTH, RANGE 12 EAST OF THE THIRD PRINCIPAL MERIDIAN, ALL IN COOK COUNTY, ILLINOIS; THAT THE SURVEY IS TRUE AND COMPLETE AS SHOWN TO THE BEST OF MY KNOWLEDGE AND BELIEF; THAT THE PLAT CORRECTLY REPRESENTS SAID SURVEY; THAT ALL MONUMENTS FOUND AND ESTABLISHED ARE OF PERMANENT QUALITY AND OCCUPY THE POSITIONS SHOWN THEREON AND THAT THE MONUMENTS ARE SUFFICIENT TO ENABLE THE SURVEY TO BE RETRACED. MADE FOR THE DEPARTMENT OF TRANSPORTATION, STATE OF ILLINOIS.

DATED AT LOMBARD, ILLINOIS THIS 17TH DAY OF OCTOBER A.D., 2011.

ILLINOIS PROFESSIONAL LAND SURVEYOR NO. 3502
LICENSE EXPIRES NOVEMBER 30, 2012

DESIGN FIRM LICENSE NO. 184003350
LICENSE EXPIRES APRIL 30, 2013

WILLIAM W. WRIGHT 3502 PROFESSIONAL LAND SURVEYOR STATE OF ILLINOIS LOMBARD, ILLINOIS

BEARINGS SHOWN HEREON ARE BASED ON ILLINOIS STATE PLANE COORDINATES, EAST ZONE, NORTH AMERICAN DATUM OF 1983. ALL COORDINATE AND DIMENSIONAL VALUES SHOWN HEREON ARE "GROUND" NOT "GRID".

COMBINED SCALE FACTOR (GROUND TO GRID) = 0.999966013

REVISION DATE	DESCRIPTION	INITIALS
10/17/11	ISSUED FINAL SURVEY TO IDOT	WWW
07/27/11	ADDED POINT NUMBERS FOR COORDINATE TABLE	WWW
01/03/11	REVISED PER IDOT REVIEW	WWW
12/21/10	REVISED PROPOSED RAILROAD CENTERLINE ALIGNMENT	WWW
10/15/10	REVISED PARCEL 0H40072-A TO 0H40072 & 0H40072-B TO 0H40072TE-B	WWW
09/23/10	ADDED PARCEL 0H40072-B; REVISED RR STATIONING	WWW

Manhard CONSULTING LTD
700 Springer Drive, Lombard, IL 60148 ph:630.681.6500 fx:630.681.6585 manhard.com
Civil Engineers • Surveyors • Water Resource Engineers • Water & Wastewater Engineers
Construction Managers • Environmental Scientists • Landscape Architects • Planners

PLAT OF HIGHWAYS
STATE OF ILLINOIS
DEPARTMENT OF TRANSPORTATION

FAP 330/US ROUTE 45

SECTION: 131st St to 179th St COOK COUNTY
PROJECT: JOB NO. R-90-004-07

STATION 288+00 TO STATION 302+00

SCALE: 1" = 50' SHEET 23 OF 55

BUREAU OF LAND ACQUISITION
201 WEST CENTER COURT
SCHAUMBURG, ILLINOIS 60196

RECORDING: RECORDED ON AS DOCUMENT NO.

R.O.W. PLAT | DATE | BY | MADE | CHECKED | INKED | NOTEBOOK NO.

October 14, 2011 - 17:19 Dwg Name: P:\Local4\dwg\Surv\Final Drawings\Plat of Highways\23-STA-288-302.dwg Updated By: bwright

PT OF SW 1/4 SEC 3 & PT OF SE 1/4 SEC 4, T36N, R12E OF THE 3RD PM, COOK CO. IL

PARCEL No.	OWNER	TOTAL HOLDINGS (ACRES)	PART TAKEN (ACRES)	PREVIOUSLY DEDICATED (ACRES)	REMAINDER (ACRES)	EASEMENT AREA (ACRES)	PERMANENT INDEX NUMBER	PURPOSE OF EASEMENT	ACQUIRED BY
0H40072TE-C	MAIN-PLACE-ORLAND PARK ASSOCIATES III, L.L.C.	10.119	377 SQ. FT. 0.009 ACRES	0.000	10.110	377 SQ. FT. 0.009 ACRES	27-03-300-017	TEMPORARY	

F.A.P. ROUTE	SECTION	COUNTY	TOTAL SHEETS	SHEET NO.
330/US 45	131st St to 179th St	COOK	778	252B
0H40072TE-C DETAIL				
FED. ROAD DIST. NO. 1	ILLINOIS	FED. AID PROJECT		

SEE SHEET 52 FOR COORDINATE VALUES FOR CENTERLINE POINTS, SECTIONS CORNERS AND ROW MONUMENTS

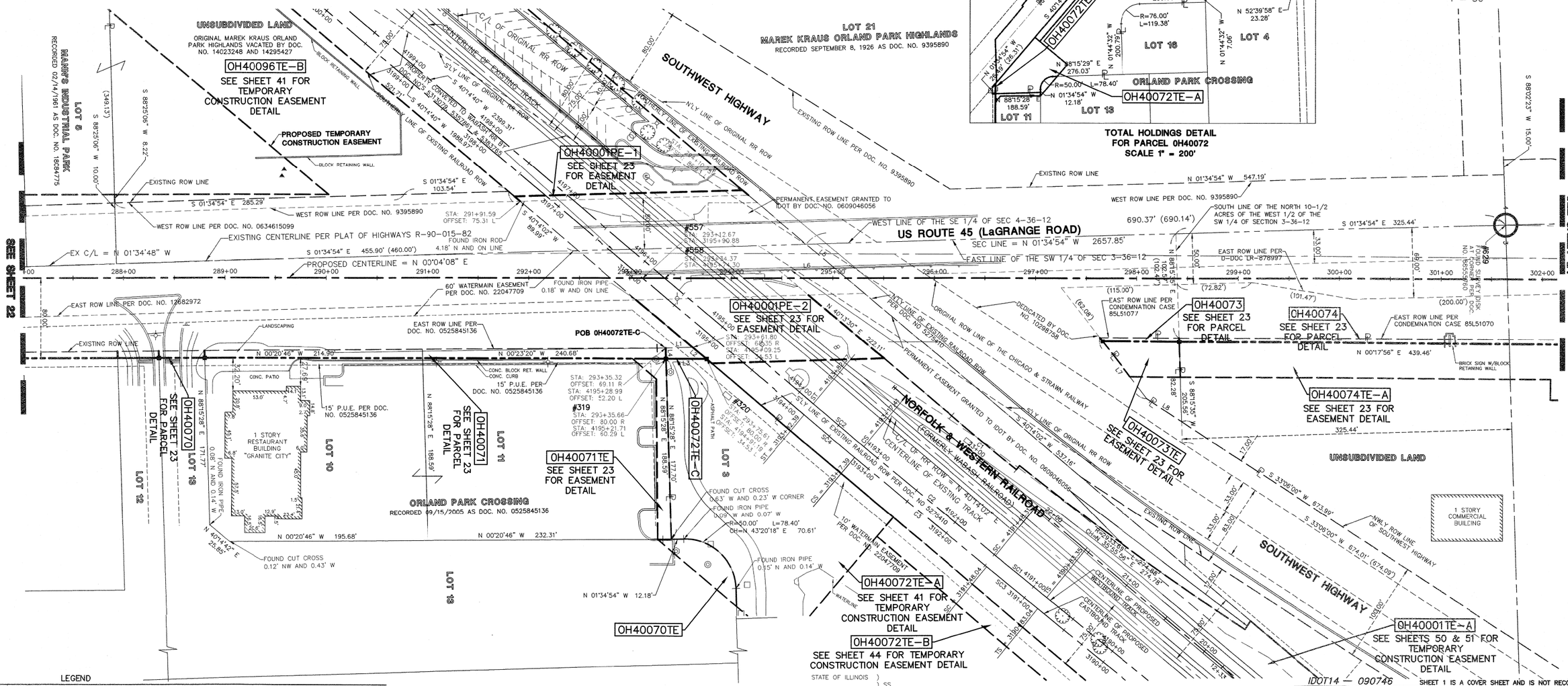

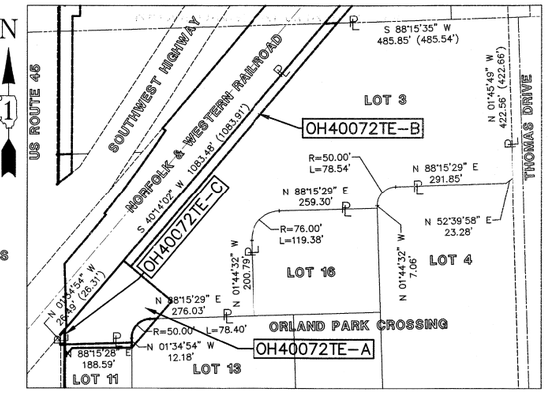

TOTAL HOLDINGS DETAIL FOR PARCEL 0H40072
SCALE 1" = 200'

0 50' 100' 200'
1" = 50'

LEGEND

SECTION CORNER
QUARTER SECTION CORNER
SECTION LINE
QUARTER SECTION LINE
QUARTER, QUARTER SECTION LINE
PLATTED LOT LINE
PROPERTY (DEED) LINE
CENTERLINE
EXISTING RIGHT-OF-WAY LINE
PROPOSED RIGHT-OF-WAY LINE
PROPOSED EASEMENT
129.32' MEASURED DIMENSION
129.32'(COMP.) COMPUTED DIMENSION
( ) RECORD DATA
EXISTING BUILDING
EX. CONCRETE CURB & GUTTER
EX. EDGE OF PAVEMENT
PK NAIL SET
REPLACED AFTER CONSTRUCTION
IRON ROD SET
IRON PIPE OR ROD FOUND
CUT CROSS FOUND OR SET
T1 T2 T3 **THESE STAKES REFERENCE FOUND OR SET MONUMENTATION.** WITNESS POINTS SET TO AID IN THE RECOVERY AND ESTABLISHMENT OF THE PROPOSED CENTERLINE OF CONSTRUCTION.
STAKING OF PROPOSED RIGHT OF WAY. MARKER TO MONUMENT THE POSTION SHOWN, IDENTIFIED BY INSCRIPTION DATA AND SURVEYORS REGISTRATION NUMBER.
POB POINT OF BEGINNING
POC POINT OF COMMENCEMENT
EX. MISCELLANEOUS MANHOLE (MH)
EX. STORM MANHOLE (MH)
EX. STORM CATCH BASIN (CB)
EX. STORM INLET (INL)
EX. FLARED END SECTION (FES)
EX. SANITARY MANHOLE (SMH)
EX. FIRE HYDRANT/AUX. VALVE
EX. VALVE BOX
EX. VALVE VAULT (V.V.)
EX. IRRIGATION CONTROL BOX
EX. ELECTRICAL METER
EX. ELECTRICAL OUTLET
EX. UTILITY POLE
EX. UTILITY POLE WITH LIGHT
EX. GUY WIRE
EX. LIGHT STANDARD
EX. STREET LIGHT
EX. GROUND LIGHT
EX. SIGN
EX. DOUBLE POLE SIGN
EX. MAILBOX
EX. BOLLARD
EX. FLAG POLE
EX. GUARD RAIL

SPIRAL CURVE TABLE

CURVE	RADIUS	LENGTH	THETA	X	Y	S TANGENT	L TANGENT	P	K	A
SC1	11445.19	64.96	0°09'45"	64.96	0.06	21.65	43.31	0.02	32.48	862.25
SC2	-11445.19	64.96	0°09'45"	64.96	0.06	21.65	43.31	0.02	32.48	862.25
SC3	11459.19	65.00	0°09'45"	65.00	0.06	21.67	43.33	0.02	32.50	863.05
SC4	-11459.19	65.00	0°09'45"	65.00	0.06	21.67	43.33	0.02	32.50	863.05

LINE TABLE

LINE	BEARING	LENGTH
L1	N 01°34'54" W	26.49'
L2	N 40°14'02" E	18.06'
L3	S 00°04'08" W	39.94'
L4	S 88°15'28" W	10.89'
L5	N 40°14'02" E	37.00'
L6	N 02°14'34" W	54.41'
L7	N 52°12'54" E	75.95'
L8	N 33°06'00" E	41.07'

CURVE TABLE

CURVE	RADIUS	LENGTH	CHORD BEARING	CHORD	DELTA
C1	2938.69'	82.55'	N 39°25'13" E	82.55'	1°36'34"
C2	11445.19'	169.10'	N 39°39'31" E	169.10'	0°50'48"
C3	11459.19'	169.35'	N 39°39'31" E	169.34'	0°50'48"

STATE OF ILLINOIS)
) SS
COUNTY OF DuPAGE)

I, WILLIAM W. WRIGHT, DO HEREBY DECLARE THAT I HAVE SURVEYED THE PLAT OF HIGHWAYS SHOWN HEREON IN SECTIONS 33 AND 34, TOWNSHIP 37 NORTH, RANGE 12 EAST OF THE THIRD PRINCIPAL MERIDIAN, AND SECTIONS 3, 4, 9, 10, 15, 16, 21, 22, 27, 28, 33 AND 34, TOWNSHIP 36 NORTH, RANGE 12 EAST OF THE THIRD PRINCIPAL MERIDIAN, ALL IN COOK COUNTY, ILLINOIS; THAT THE SURVEY IS TRUE AND COMPLETE AS SHOWN TO THE BEST OF MY KNOWLEDGE AND BELIEF; THAT THE PLAT CORRECTLY REPRESENTS SAID SURVEY; THAT ALL MONUMENTS FOUND AND ESTABLISHED ARE OF PERMANENT QUALITY AND OCCUPY THE POSITIONS SHOWN THEREON AND THAT THE MONUMENTS ARE SUFFICIENT TO ENABLE THE SURVEY TO BE RETRACED. MADE FOR THE DEPARTMENT OF TRANSPORTATION, STATE OF ILLINOIS.

DATED AT LOMBARD, ILLINOIS THIS 17TH DAY OF OCTOBER A.D., 2011.

ILLINOIS PROFESSIONAL LAND SURVEYOR NO. 3502
LICENSE EXPIRES NOVEMBER 30, 2012

DESIGN FIRM LICENSE NO. 184003350
LICENSE EXPIRES APRIL 30, 2013

RECEIVED OCT 24 2011 PLATS & LEGALS

WILLIAM W. WRIGHT 3502 PROFESSIONAL LAND SURVEYOR STATE OF ILLINOIS LOMBARD, ILLINOIS

BEARINGS SHOWN HEREON ARE BASED ON ILLINOIS STATE PLANE COORDINATES, EAST ZONE, NORTH AMERICAN DATUM OF 1983. ALL COORDINATE AND DIMENSIONAL VALUES SHOWN HEREON ARE "GROUND" NOT "GRID".

COMBINED SCALE FACTOR (GROUND TO GRID) = 0.999966013

REVISION DATE	DESCRIPTION	INITIALS
10-24-	To be used only if 0072 is not clear M - IDOT -	VEM
10/17/11	ISSUED FINAL SURVEY TO IDOT	WWW
07/27/11	ADDED POINT NUMBERS FOR COORDINATE TABLE	WWW

IDOT14 — 090746 SHEET 1 IS A COVER SHEET AND IS NOT RECORDED

Manhard CONSULTING LTD
700 Springer Drive, Lombard, IL 60148 ph.630.691.8500 fx.630.691.8505 manhard.com
Civil Engineers • Surveyors • Water Resource Engineers • Water & Wastewater Engineers
Construction Managers • Environmental Scientists • Landscape Architects • Planners

PLAT OF HIGHWAYS
STATE OF ILLINOIS
DEPARTMENT OF TRANSPORTATION
FAP 330/US ROUTE 45
SECTION: 131st St to 179th St COOK COUNTY
PROJECT: JOB NO. R-90-004-07
0H40072TE-C DETAIL
SCALE: 1" = 50' SHEET 23A OF 55

BUREAU OF LAND ACQUISITION
201 WEST CENTER COURT
SCHAUMBURG, ILLINOIS 60196

R.O.W. PLAT	BY	DATE
MADE		
CHECKED		
NOTEBOOK NO.	INKED	

October 14, 2011 - 17:20 Dwg Name: P:\dot14\dwg\Svr\Final Drawings\Plat of Highways\23A-0H40072TE-C DETAIL.dwg Updated By: bwright

RECORDING: RECORDED ON
AS DOCUMENT NO.

PT OF W 1/2 SEC 3 & PT OF E 1/2 SEC 4, T36N, R12E OF THE 3RD PM, COOK CO. IL

PARCEL No.	OWNER	TOTAL HOLDINGS (ACRES)	PART TAKEN (ACRES)	PREVIOUSLY DEDICATED (ACRES)	REMAINDER (ACRES)	EASEMENT AREA (ACRES)	PERMANENT INDEX NUMBER	PURPOSE OF EASEMENT	ACQUIRED BY
0H40074	HOLDA ENTERPRISES, INC.	3.372	0.057	0.000	3.315	N/A	27-03-300-004 27-03-100-005	N/A	
0H40074TE-A		N/A	N/A	N/A	N/A	0.386		TEMPORARY	
0H40074TE-B		N/A	N/A	N/A	N/A	413 SQ. FT 0.009 ACRES	27-03-100-005	TEMPORARY	
0H40075-A	LAKESIDE BANK AS TRUSTEE UNDER TRUST NO. 10-1711	23.462	0.046	0.000	23.361	N/A	27-03-100-032	N/A	
0H40075-B			0.006 ACRES 240 SQ. FT						
0H40075-C			0.049						
0H40075TE-A			N/A	N/A	N/A	0.028		TEMPORARY	
0H40075TE-B						0.177		TEMPORARY	
0H40075TE-C						0.029		TEMPORARY	

F.A.P. ROUTE	SECTION	COUNTY	TOTAL SHEETS	SHEET NO.
330/US 45	131st St to 179th St	COOK	778	252C
STATION 302+00 TO STATION 316+00				
FED. ROAD DIST. NO. 1		ILLINOIS	FED. AID PROJECT	

0 50' 100' 200'
1" = 50'

SEE SHEET 52 FOR COORDINATE VALUES FOR CENTERLINE POINTS, SECTIONS CORNERS AND ROW MONUMENTS

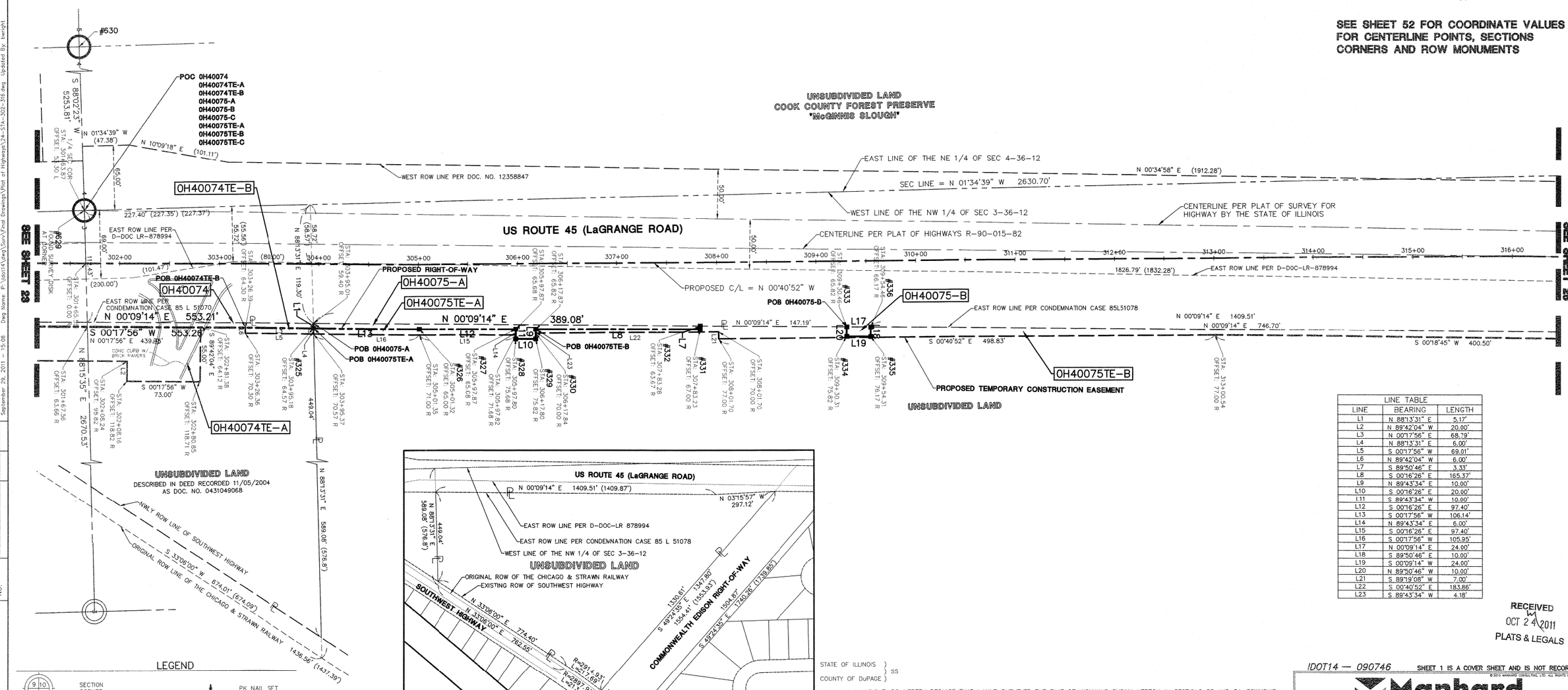

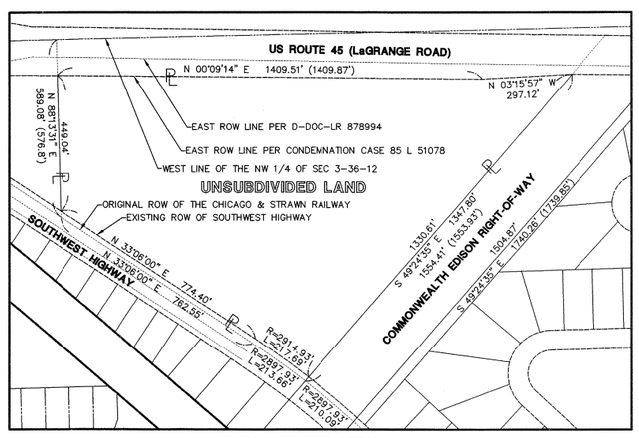

TOTAL HOLDINGS DETAIL FOR PARCEL 0H40075
SCALE 1" = 250'

LINE TABLE		
LINE	BEARING	LENGTH
L1	N 88°13'31" E	5.17'
L2	N 89°42'04" W	20.00'
L3	N 00°17'56" E	68.79'
L4	N 88°13'31" E	6.00'
L5	S 00°17'56" W	69.01'
L6	N 89°42'04" W	6.00'
L7	S 89°50'46" E	3.33'
L8	S 00°16'26" E	165.37'
L9	N 89°43'34" E	10.00'
L10	S 00°16'26" E	20.00'
L11	S 89°43'34" W	10.00'
L12	S 00°16'26" E	97.40'
L13	S 00°17'56" W	106.14'
L14	N 89°43'34" E	6.00'
L15	S 00°16'26" E	97.40'
L16	S 00°17'56" W	105.95'
L17	N 00°09'14" E	24.00'
L18	S 89°50'46" E	10.00'
L19	S 00°09'14" W	24.00'
L20	N 89°50'46" W	10.00'
L21	S 89°19'08" W	7.00'
L22	S 00°40'52" E	183.86'
L23	S 89°43'34" W	4.18'

RECEIVED
OCT 24 2011
PLATS & LEGALS

LEGEND

- SECTION CORNER
- QUARTER SECTION CORNER
- SECTION LINE
- QUARTER SECTION LINE
- QUARTER, QUARTER SECTION LINE
- PLATTED LOT LINE
- PROPERTY (DEED) LINE
- CENTERLINE
- EXISTING RIGHT-OF-WAY LINE
- PROPOSED RIGHT-OF-WAY LINE
- PROPOSED EASEMENT
- 129.32' MEASURED DIMENSION
- 129.32'(COMP.) COMPUTED DIMENSION
- ( ) RECORD DATA
- EXISTING BUILDING
- EX. CONCRETE CURB & GUTTER
- EX. EDGE OF PAVEMENT
- EX. GUARD RAIL
- PK NAIL SET
- REPLACED AFTER CONSTRUCTION
- IRON ROD SET
- IRON PIPE OR ROD FOUND
- CUT CROSS FOUND OR SET
- T1 T2 T3 **THESE STAKES REFERENCE FOUND OR SET MONUMENTATION.** WITNESS POINTS SET TO AID IN THE RECOVERY AND ESTABLISHMENT OF THE PROPOSED CENTERLINE OF CONSTRUCTION.
- **STAKING OF PROPOSED RIGHT OF WAY.** MARKER TO MONUMENT THE POSITION SHOWN. IDENTIFIED BY INSCRIPTION DATA AND SURVEYORS REGISTRATION NUMBER.
- POB POINT OF BEGINNING
- POC POINT OF COMMENCEMENT
- EX. MISCELLANEOUS MANHOLE (MH)
- EX. STORM MANHOLE (MH)
- EX. STORM CATCH BASIN (CB)
- EX. STORM INLET (INL)
- EX. FLARED END SECTION (FES)

LEGEND

- EX. GUY WIRE
- EX. LIGHT STANDARD
- EX. STREET LIGHT
- EX. GROUND LIGHT
- EX. SIGN
- EX. DOUBLE POLE SIGN
- EX. MAILBOX
- EX. BOLLARD
- EX. FLAG POLE
- EX. SANITARY MANHOLE (SMH)
- EX. FIRE HYDRANT/AUX. VALVE
- EX. VALVE BOX
- EX. VALVE VAULT (V.V.)
- EX. IRRIGATION CONTROL BOX
- EX. ELECTRICAL METER
- EX. ELECTRICAL OUTLET
- EX. UTILITY POLE
- EX. UTILITY POLE WITH LIGHT

STATE OF ILLINOIS } SS
COUNTY OF DuPAGE }

I, WILLIAM W. WRIGHT, DO HEREBY DECLARE THAT I HAVE SURVEYED THE PLAT OF HIGHWAYS SHOWN HEREON IN SECTIONS 33 AND 34, TOWNSHIP 37 NORTH, RANGE 12 EAST OF THE THIRD PRINCIPAL MERIDIAN, AND SECTIONS 3, 4, 9, 10, 15, 16, 21, 22, 27, 28, 33 AND 34, TOWNSHIP 36 NORTH, RANGE 12 EAST OF THE THIRD PRINCIPAL MERIDIAN, ALL IN COOK COUNTY, ILLINOIS; THAT THE SURVEY IS TRUE AND COMPLETE AS SHOWN TO THE BEST OF MY KNOWLEDGE AND BELIEF; THAT THE PLAT CORRECTLY REPRESENTS SAID SURVEY; THAT ALL MONUMENTS FOUND AND ESTABLISHED ARE OF PERMANENT QUALITY AND OCCUPY THE POSITIONS SHOWN THEREON AND THAT THE MONUMENTS ARE SUFFICIENT TO ENABLE THE SURVEY TO BE RETRACED. MADE FOR THE DEPARTMENT OF TRANSPORTATION, STATE OF ILLINOIS.

DATED AT LOMBARD, ILLINOIS THIS 17TH DAY OF OCTOBER A.D., 2011.

ILLINOIS PROFESSIONAL LAND SURVEYOR NO. 3502
LICENSE EXPIRES NOVEMBER 30, 2012

DESIGN FIRM LICENSE NO. 184003350
LICENSE EXPIRES APRIL 30, 2013

BEARINGS SHOWN HEREON ARE BASED ON ILLINOIS STATE PLANE COORDINATES, EAST ZONE, NORTH AMERICAN DATUM OF 1983. ALL COORDINATE AND DIMENSIONAL VALUES SHOWN HEREON ARE "GROUND" NOT "GRID".

COMBINED SCALE FACTOR (GROUND TO GRID) = 0.999966013

WILLIAM W. WRIGHT 3502 PROFESSIONAL LAND SURVEYOR STATE OF ILLINOIS LOMBARD, ILLINOIS

REVISION DATE	DESCRIPTION	INITIALS
10/17/11	ISSUED FINAL SURVEY TO IDOT	WWW
07/27/11	ADDED POINT NUMBERS FOR COORDINATE TABLE	WWW
01/03/11	REVISED PER IDOT REVIEW	WWW

IDOT14 — 090746 SHEET 1 IS A COVER SHEET AND IS NOT RECORDED

Manhard CONSULTING LTD
700 Springer Drive, Lombard, IL 60148 ph:630.691.8300 fx:630.691.8385 manhard.com
Civil Engineers • Surveyors • Water Resource Engineers • Water & Wastewater Engineers
Construction Managers • Environmental Scientists • Landscape Architects • Planners

PLAT OF HIGHWAYS
STATE OF ILLINOIS
DEPARTMENT OF TRANSPORTATION
FAP 330/US ROUTE 45
SECTION: 131st St to 179th St COOK COUNTY
PROJECT: JOB NO. R-90-004-07
STATION 302+00 TO STATION 316+00

SCALE: 1" = 50' SHEET 24 OF 55

BUREAU OF LAND ACQUISITION
201 WEST CENTER COURT
SCHAUMBURG, ILLINOIS 60196

September 29, 2011 - 15:08 Dwg Name: P:\Idot14\Dwg\Surv\Final Drawings\Plat of Highways\24-STA-302-316.dwg Updated By: bwright

R.O.W. PLAT	BY	DATE
MADE		
CHECKED		
INKED		
NOTEBOOK NO.		

PT OF NW 1/4 SEC 3 & PT OF NE 1/4 SEC 4, T36N, R12E OF THE 3RD PM, COOK CO. IL

PARCEL No.	OWNER	TOTAL HOLDINGS (ACRES)	PART TAKEN (ACRES)	PREVIOUSLY DEDICATED (ACRES)	REMAINDER (ACRES)	EASEMENT AREA (ACRES)	PERMANENT INDEX NUMBER	PURPOSE OF EASEMENT	ACQUIRED BY
0H40075-A	LAKESIDE BANK AS TRUSTEE UNDER TRUST NO. 10-1711	23.462	0.046	0.000	23.361	N/A	27-03-100-032	N/A	
0H40075-B			0.006 ACRES 240 SQ FT						
0H40075-C			0.049						
0H40075TE-A			N/A	N/A	N/A	0.028		TEMPORARY	
0H40075TE-B						0.177		TEMPORARY	
0H40075TE-C						0.029		TEMPORARY	
0H40076PE	COMMONWEALTH EDISON COMPANY	6.829	0.000	0.000	6.829	0.120	27-03-100-009	PERMANENT	
0H40076TE						0.024		TEMPORARY	
0H40077	MARQUETTE BANK AS TRUSTEE UNDER TRUST NO. 15474	4.999	0.017	0.000	4.982	N/A	27-03-100-033 27-03-101-031 THRU 038	N/A	
0H40078	ORLAND PARK FIRST KOREAN UNITED METHODIST CHURCH	0.532	0.015	0.000	0.517	N/A	27-03-101-003	N/A	
0H40079	FIRST MIDWEST BANK AS TRUSTEE UNDER TRUST NO. 2658	0.986	0.132	0.000	0.854	0.110	27-03-101-001 27-03-101-002	TEMPORARY	

LINE TABLE					
LINE	BEARING	LENGTH	LINE	BEARING	LENGTH
L1	S 49°24'35" E	21.98'	L16	S 03°18'05" W	24.28'
L2	S 49°24'35" E	9.17'	L17	S 00°57'42" E	28.26'
L3	N 89°40'52" W	7.00'	L18	N 88°01'25" E	21.18'
L4	S 49°24'35" E	20.88'	L19	S 32°37'26" W	35.90'
L5	N 49°24'35" W	28.55'	L20	S 00°06'32" E	126.13'
L6	N 03°15'57" W	3.54'	L21	S 03°18'05" W	129.47'
L7	N 89°02'18" E	20.00'	L22	N 23°57'14" E	48.66'
L8	S 00°57'42" E	53.00'	L23	S 01°50'56" E	15.00'
L9	S 89°02'18" W	20.00'	L24	N 89°40'52" W	6.67'
L10	N 00°57'42" W	53.00'	L25	S 00°19'08" W	81.02'
L11	N 00°16'38" E	48.98'	L26	S 71°11'33" W	14.54'
L12	S 49°19'13" E	19.49'	L27	N 88°01'25" E	29.83'
L13	S 00°57'42" E	49.87'	L28	S 00°19'24" W	21.29'
L14	N 00°16'38" E	34.49'	L29	S 87°58'03" W	4.93'
L15	N 71°11'33" E	16.42'			

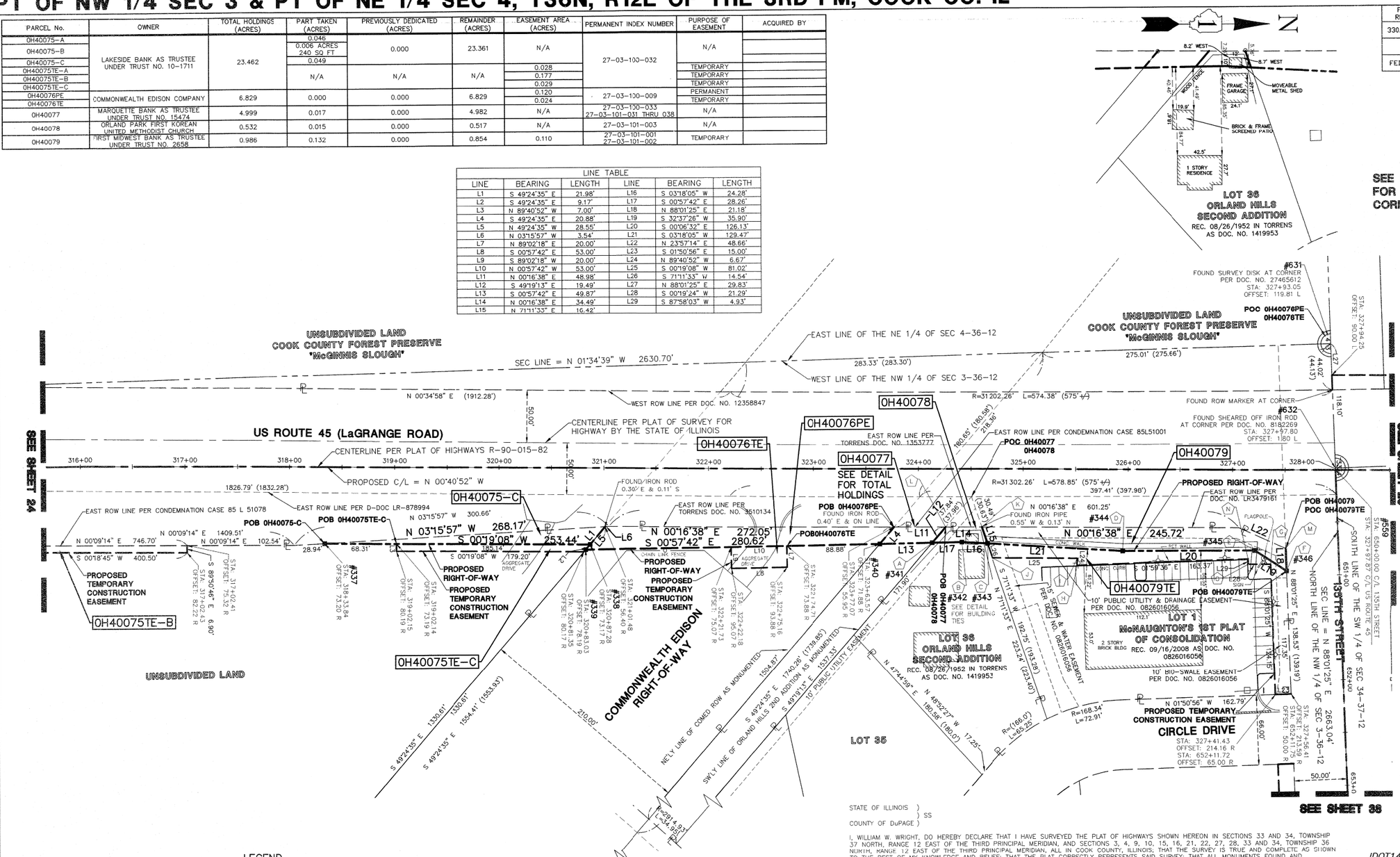

F.A.P. ROUTE	SECTION	COUNTY	TOTAL SHEETS	SHEET NO.
330/US 45	131st St to 179th St	COOK	778	252D
STATION 316+00 TO STATION 328+00				
FED. ROAD DIST. NO. 1	ILLINOIS	FED. AID PROJECT		

0 50' 100' 200'
1"= 50'

SEE SHEET 52 FOR COORDINATE VALUES FOR CENTERLINE POINTS, SECTIONS CORNERS AND ROW MONUMENTS

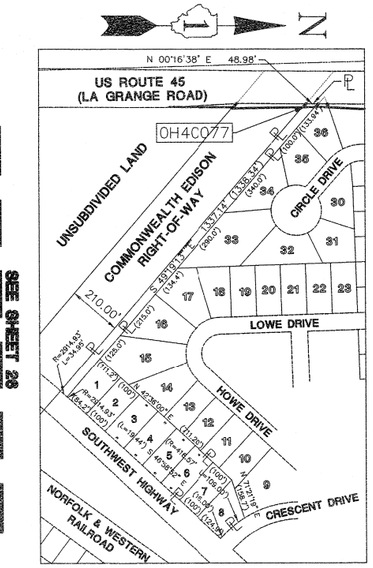

TOTAL HOLDINGS DETAIL FOR PARCEL 0H40077
SCALE 1" = 300'

CORNER	STATION	OFFSET
A	324+13.43	70.78 R
B	324+41.59	70.13 R
C	324+65.93	71.39 R
D	325+95.23	78.11 R
E	327+21.35	77.15 R
F	327+51.70	96.34 R
G	327+36.44	90.11 R
H	325+51.72	91.79 R
I	325+51.71	85.11 R
J	324+70.70	85.12 R
K	324+60.55	55.88 R
L	324+26.06	55.91 R
M	327+50.85	75.17 R
N	327+14.95	85.18 R
O	327+15.15	90.11 R

RECEIVED
OCT 24 2011
PLATS & LEGALS

LEGEND

- SECTION CORNER
- QUARTER SECTION CORNER
- SECTION LINE
- QUARTER SECTION LINE
- QUARTER, QUARTER SECTION LINE
- PLATTED LOT LINE
- PROPERTY (DEED) LINE
- CENTERLINE
- EXISTING RIGHT-OF-WAY LINE
- PROPOSED RIGHT-OF-WAY LINE
- PROPOSED EASEMENT
- 129.32' MEASURED DIMENSION
- 129.32'(COMP.) COMPUTED DIMENSION
- ( ) RECORD DATA
- EXISTING BUILDING
- EX. CONCRETE CURB & GUTTER
- EX. EDGE OF PAVEMENT
- EX. GUARD RAIL
- PK NAIL SET
- REPLACED AFTER CONSTRUCTION
- IRON ROD SET
- IRON PIPE OR ROD FOUND
- CUT CROSS FOUND OR SET
- T1 T2 T3 **THESE STAKES REFERENCE FOUND OR SET MONUMENTATION.** WITNESS POINTS SET TO AID IN THE RECOVERY AND ESTABLISHMENT OF THE PROPOSED CENTERLINE OF CONSTRUCTION.
- **STAKING OF PROPOSED RIGHT OF WAY.** MARKER TO MONUMENT THE POSITION SHOWN. IDENTIFIED BY INSCRIPTION DATA AND SURVEYORS REGISTRATION NUMBER.
- POB POINT OF BEGINNING
- POC POINT OF COMMENCEMENT
- EX. MISCELLANEOUS MANHOLE (MH)
- EX. STORM MANHOLE (MH)
- EX. STORM CATCH BASIN (CB)
- EX. STORM INLET (INL)
- EX. FLARED END SECTION (FES)
- EX. SANITARY MANHOLE (SMH)
- EX. FIRE HYDRANT/AUX. VALVE
- EX. VALVE BOX
- EX. VALVE VAULT (V.V.)
- EX. IRRIGATION CONTROL BOX
- EX. ELECTRICAL METER
- EX. ELECTRICAL OUTLET
- EX. UTILITY POLE
- EX. UTILITY POLE WITH LIGHT
- EX. GUY WIRE
- EX. LIGHT STANDARD
- EX. STREET LIGHT
- EX. GROUND LIGHT
- EX. SIGN
- EX. DOUBLE POLE SIGN
- EX. MAILBOX
- EX. BOLLARD
- EX. FLAG POLE

STATE OF ILLINOIS)
) SS
COUNTY OF DuPAGE)

I, WILLIAM W. WRIGHT, DO HEREBY DECLARE THAT I HAVE SURVEYED THE PLAT OF HIGHWAYS SHOWN HEREON IN SECTIONS 33 AND 34, TOWNSHIP 37 NORTH, RANGE 12 EAST OF THE THIRD PRINCIPAL MERIDIAN, AND SECTIONS 3, 4, 9, 10, 15, 16, 21, 22, 27, 28, 33 AND 34, TOWNSHIP 36 NORTH, RANGE 12 EAST OF THE THIRD PRINCIPAL MERIDIAN, ALL IN COOK COUNTY, ILLINOIS; THAT THE SURVEY IS TRUE AND COMPLETE AS SHOWN TO THE BEST OF MY KNOWLEDGE AND BELIEF; THAT THE PLAT CORRECTLY REPRESENTS SAID SURVEY; THAT ALL MONUMENTS FOUND AND ESTABLISHED ARE OF PERMANENT QUALITY AND OCCUPY THE POSITIONS SHOWN THEREON AND THAT THE MONUMENTS ARE SUFFICIENT TO ENABLE THE SURVEY TO BE RETRACED. MADE FOR THE DEPARTMENT OF TRANSPORTATION, STATE OF ILLINOIS.

DATED AT LOMBARD, ILLINOIS THIS 17TH DAY OF OCTOBER A.D., 2011.

ILLINOIS PROFESSIONAL LAND SURVEYOR NO. 3502
LICENSE EXPIRES NOVEMBER 30, 2012

DESIGN FIRM LICENSE NO. 184003350
LICENSE EXPIRES APRIL 30, 2013

WILLIAM W. WRIGHT 3502 PROFESSIONAL LAND SURVEYOR STATE OF ILLINOIS LOMBARD, ILLINOIS

BEARINGS SHOWN HEREON ARE BASED ON ILLINOIS STATE PLANE COORDINATES, EAST ZONE, NORTH AMERICAN DATUM OF 1983. ALL COORDINATE AND DIMENSIONAL VALUES SHOWN HEREON ARE "GROUND" NOT "GRID".

COMBINED SCALE FACTOR (GROUND TO GRID) = 0.999966013

10/17/11	ISSUED FINAL SURVEY TO IDOT	WWW
09/01/11	REVISED PARCEL 0H40079TE	WWW
08/15/11	DELETED PARCEL 0H40095TE	WWW
07/27/11	ADDED POINT NUMBERS FOR COORDINATE TABLE	WWW
02/14/11	REVISED PER IDOT REVIEW	WWW
01/03/11	REVISED PER IDOT REVIEW	WWW
12/22/10	REVISED TOTAL HOLDINGS FOR PARCEL 0H40077	WWW
09/17/10	REVISED PER IDOT REVIEW	WWW

IDOT14 — 090746 SHEET 1 IS A COVER SHEET AND IS NOT RECORDED

Manhard CONSULTING LTD
700 Springer Drive, Lombard, IL 60148 ph:630.691.8000 fx:630.691.9555 manhard.com
Civil Engineers • Surveyors • Water Resource Engineers • Water & Wastewater Engineers
Construction Managers • Environmental Scientists • Landscape Architects • Planners

PLAT OF HIGHWAYS
STATE OF ILLINOIS
DEPARTMENT OF TRANSPORTATION
FAP 330/US RCUTE 45
SECTION: 131st St to 179th St COOK COUNTY
PROJECT: JOB NO. R-90-004-07
STATION 316+00 TO STATION 328+00
SCALE: 1" = 50' SHEET 25 OF 55

BUREAU OF LAND ACQUISITION
201 WEST CENTER COURT
SCHAUMBURG, ILLINOIS 60196

R.O.W. PLAT	BY	DATE
MADE		
CHECKED		
INKED		
NOTEBOOK NO.		

Dwg Name: P:\0014\dwg\Surv\Final Drawings\Plat of Highways\25-STA-316-328.dwg Updated By: bwright
September 29, 2011 - 18:06

PT OF SW 1/4 SEC 34 & PT OF SE 1/4 OF SEC 33, T37N, R12E OF THE 3RD PM, COOK CO. IL

PARCEL No.	OWNER	TOTAL HOLDINGS (ACRES)	PART TAKEN (ACRES)	PREVIOUSLY DEDICATED (ACRES)	REMAINDER (ACRES)	EASEMENT AREA (ACRES)	PERMANENT INDEX NUMBER	PURPOSE OF EASEMENT	ACQUIRED BY
0H40081A	MARQUETTE BANK AS TRUSTEE UNDER TRUST NO. 17350	69.950	406 SQ. FT. 0.009 ACRES	0.000	69.938	N/A	23-34-302-002	N/A	
0H40081B			125 SQ. FT. 0.003 ACRES						
0H40081TE-A			N/A			0.175		TEMPORARY	
0H40081TE-B						0.305		TEMPORARY	
0H40082	SOUTHMOOR COUNTRY CLUB HOMEOWNERS' ASSOCIATION	2.224	0.016	0.000	2.208	0.272	23-34-303-016	TEMPORARY	
0H40089TE-A	CONSOLIDATED HIGH SCHOOL DISTRICT NO. 230	51.153	N/A	N/A	N/A	0.051	23-33-401-008 23-33-401-012	TEMPORARY	
0H40090TE	ALL SAINTS EVANGELICAL LUTHERAN CHURCH OF ORLAND PARK	8.070	0.000	0.000	8.070	0.062	23-33-401-018 23-33-401-019	TEMPORARY	
0H40091TE	BOBBY & EVELYN PALEOTHODOROS	0.395	0.000	0.000	0.395	0.031	23-33-402-001	TRMPORARY	
0H40092TE	PALOS GOLF & SADDLE CLUB HOMEOWNERS ASSOCIATION	1.005	0.000	0.000	1.005	0.022	23-33-402-014	TEMPORARY	
0H40093TE	PANAGIOTA FALAKOS AS TRUSTEE UNDER TRUST NO. 101000	0.420	0.000	0.000	0.420	0.024	23-33-402-002	TEMPORARY	
0H40094TE	STANDARD BANK & TRUST COMPANY AS TRUSTEE UNDER TRUST NO. 20442	2.820	0.000	0.000	2.820	0.067	23-33-401-011	TEMPORARY	

F.A.P. RDUTE	SECTION	COUNTY	TOTAL SHEETS	SHEET NO.
330/US 45	131st St to 179th St	COOK	778	252E
STATION 328+00 TO STATION 342+00				
FED. ROAD DIST. NO. 1	ILLINOIS	FED. AID PROJECT		

0 50' 100' 200'
1"= 50'

N

SEE SHEET 52 FOR COORDINATE VALUES FOR CENTERLINE POINTS, SECTIONS CORNERS AND ROW MONUMENTS

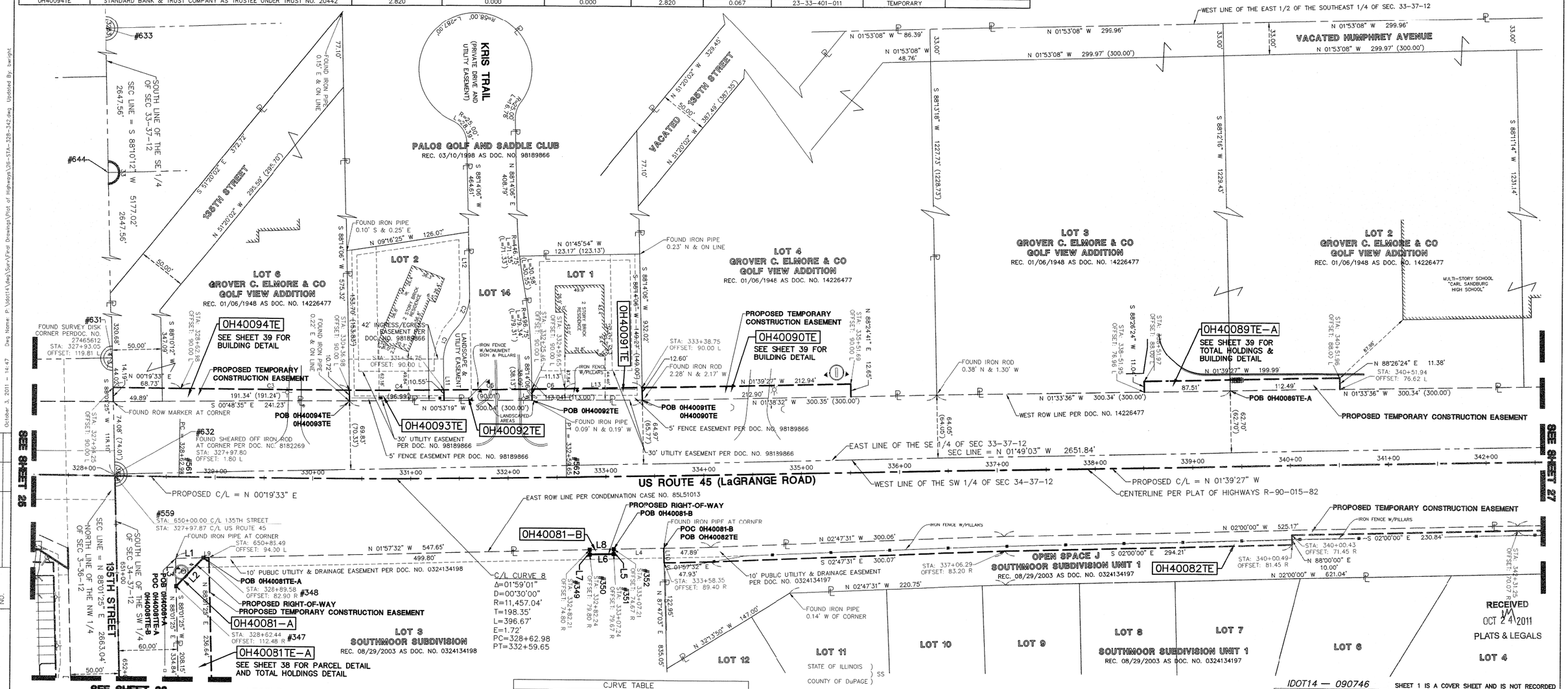

DATE	BY	MADE	CHECKED	INKED

R.O.W. PLAT
NOTEBOOK NO.

October 3, 2011 – 14:47 Dwg Name: P:\Idot14\dwg\Surv\Final Drawings\Plat of Highways\26-STA-328-342.dwg Updated By: bwright

LEGEND

SECTION CORNER
QUARTER SECTION CORNER
SECTION LINE
QUARTER SECTION LINE
QUARTER, QUARTER SECTION LINE
PLATTED LOT LINE
PROPERTY (DEED) LINE
CENTERLINE
EXISTING RIGHT-OF-WAY LINE
PROPOSED RIGHT-OF-WAY LINE
PROPOSED EASEMENT
129.32' MEASURED DIMENSION
129.32'(COMP.) COMPUTED DIMENSION
( ) RECORD DATA
EXISTING BUILDING

EX. CONCRETE CURB & GUTTER
EX. EDGE OF PAVEMENT
EX. GUARD RAIL
PK NAIL SET
REPLACED AFTER CONSTRUCTION
IRON ROD SET
IRON PIPE OR ROD FOUND
CUT CROSS FOUND OR SET
T1 T2 T3 **THESE STAKES REFERENCE FOUND OR SET MONUMENTATION.** WITNESS POINTS SET TO AID IN THE RECOVERY AND ESTABLISHMENT OF THE PROPOSED CENTERLINE OF CONSTRUCTION.
STAKING OF PROPOSED RIGHT OF WAY. MARKER TO MONUMENT THE POSITION SHOWN. IDENTIFIED BY INSCRIPTION DATA AND SURVEYORS REGISTRATION NUMBER.
POB POINT OF BEGINNING
POC POINT OF COMMENCEMENT
EX. MISCELLANEOUS MANHOLE (MH)
EX. STORM MANHOLE (MH)
EX. STORM CATCH BASIN (CB)
EX. STORM INLET (INL)
EX. FLARED END SECTION (FES)
EX. SANITARY MANHOLE (SMH)
EX. FIRE HYDRANT/AUX. VALVE
EX. VALVE BOX
EX. VALVE VAULT (V.V.)
EX. IRRIGATION CONTROL BOX
EX. ELECTRICAL METER
EX. ELECTRICAL OUTLET
EX. UTILITY POLE
EX. UTILITY POLE WITH LIGHT
EX. GUY WIRE
EX. LIGHT STANDARD
EX. STREET LIGHT
EX. GROUND LIGHT
EX. SIGN
EX. DOUBLE POLE SIGN
EX. MAILBOX
EX. BOLLARD
EX. FLAG POLE

CJRVE TABLE

CURVE	RADIUS	LENGTH	CHORD BEARING	CHORD	DELTA
C1	47.80'	37.54'	S 69°15'58" E	36.58'	44°59'51"
C2	47.80'	37.54'	S 46°58'04" E	36.58'	44°59'51"
C3	11367.04'	172.64	N 00°06'33" W	172.63'	0°52'13"
C4	11367.04'	96.99'	N 00°47'20" W	96.99'	0°29'20"
C5	11367.04'	90.00'	N 01°15'36" W	90.00'	0°27'13"
C6	11367.04'	33.89'	N 01°34'21" W	33.89'	0°10'15"

LINE TABLE

LINE	BEARING	LENGTH
L1	N 01°57'32" W	28.50'
L2	S 46°58'04" E	40.30'
L3	S 88°01'25" W	28.50'
L4	S 01°57'32" E	50.99'
L5	N 88°02'28" E	5.00'
L6	S 01°57'32" E	25.00'
L7	S 88°02'28" W	5.00'
L8	N 01°57'32" W	25.00'
L9	N 01°57'32" W	5.50'
L10	S 87°47'03" W	15.00'
L11	S 88°14'06" W	39.82'
L12	S 88°14'06" W	64.24'
L13	N 01°39'27" W	79.10'

STATE OF ILLINOIS)
) SS
COUNTY OF DuPAGE)

I, WILLIAM W. WRIGHT, DO HEREBY DECLARE THAT I HAVE SURVEYED THE PLAT OF HIGHWAYS SHOWN HEREON IN SECTIONS 33 AND 34, TOWNSHIP 37 NORTH, RANGE 12 EAST OF THE THIRD PRINCIPAL MERIDIAN, AND SECTIONS 3, 4, 9, 10, 15, 16, 21, 22, 27, 28, 33 AND 34, TOWNSHIP 36 NORTH, RANGE 12 EAST OF THE THIRD PRINCIPAL MERIDIAN, ALL IN COOK COUNTY, ILLINOIS; THAT THE SURVEY IS TRUE AND COMPLETE AS SHOWN TO THE BEST OF MY KNOWLEDGE AND BELIEF; THAT THE PLAT CORRECTLY REPRESENTS SAID SURVEY; THAT ALL MONUMENTS FOUND AND ESTABLISHED ARE OF PERMANENT QUALITY AND OCCUPY THE POSITIONS SHOWN THEREON AND THAT THE MONUMENTS ARE SUFFICIENT TO ENABLE THE SURVEY TO BE RETRACED. MADE FOR THE DEPARTMENT OF TRANSPORTATION, STATE OF ILLINOIS.

DATED AT LOMBARD, ILLINOIS THIS 17TH DAY OF OCTOBER A.D., 2011.

ILLINOIS PROFESSIONAL LAND SURVEYOR NO. 3502
LICENSE EXPIRES NOVEMBER 30, 2012

DESIGN FIRM LICENSE NO. 184003350
LICENSE EXPIRES APRIL 30, 2013

WILLIAM W. WRIGHT 3502 PROFESSIONAL LAND SURVEYOR STATE OF ILLINOIS LOMBARD, ILLINOIS

BEARINGS SHOWN HEREON ARE BASED ON ILLINOIS STATE PLANE COORDINATES, EAST ZONE, NORTH AMERICAN DATUM OF 1983. ALL COORDINATE AND DIMENSIONAL VALUES SHOWN HEREON ARE "GROUND" NOT "GRID".

COMBINED SCALE FACTOR (GROUND TO GRID) = 0.999966013

REVISION DATE	DESCRIPTION	INITIALS
10/17/11	ISSUED FINAL SURVEY TO IDOT	WWW
07/27/11	ADDED POINT NUMBERS FOR COORDINATE TABLE	WWW
03/11/11	PER IDOT REVIEW	WWW
02/14/11	PER ENGINEERING CONSULTANT MEMO	BJP
09/17/10	REVISED PER IDOT REVIEW	WWW

RECEIVED OCT 24 2011 PLATS & LEGALS

IDOT14 — 090746

SHEET 1 IS A COVER SHEET AND IS NOT RECORDED

Manhard CONSULTING LTD
700 Springer Drive, Lombard, IL 60148 p:630.568.8500 f:630.568.8585 manhard.com
Civil Engineers • Surveyors • Water Resource Engineers • Water & Wastewater Engineers
Construction Managers • Environmental Scientists • Landscape Architects • Planners

PLAT OF HIGHWAYS
STATE OF ILLINOIS
DEPARTMENT OF TRANSPORTATION

FAP 330/US ROUTE 45
SECTION: 131st St to 179th St COOK COUNTY
PROJECT: JOB NO. R-90-004-07
STATION 328+00 TO STATION 342+00

SCALE: 1" = 50' SHEET 26 OF 55

BUREAU OF LAND ACQUISITION
201 WEST CENTER COURT
SCHAUMBURG, ILLINOIS 60196

RECORDING: RECORDED ON AS DOCUMENT NO.

PT OF E 1/2 SEC 33 & W 1/2 SEC 34, T37N, R12E OF THE 3RD PM, COOK CO. IL

PARCEL No.	OWNER	TOTAL HOLDINGS (ACRES)	PART TAKEN (ACRES)	PREVIOUSLY DEDICATED (ACRES)	REMAINDER (ACRES)	EASEMENT AREA (ACRES)	PERMANENT INDEX NUMBER	PURPOSE OF EASEMENT	ACQUIRED BY
0H40082	SOUTHMOOR COUNTRY CLUB HOMEOWNERS' ASSOCIATION	2.224	0.016	0.000	2.208	0.272	23-34-303-016	TEMPORARY	
0H40083	E.C. STERN ENTERPRISES, INC.	1.302	0.031	0.000	1.271	0.000	23-34-302-018	N/A	
0H40084TE	TBCC PROPERTIES, LLC	1.325	0.000	0.000	1.325	0.064	23-34-302-019	TEMPORARY	
0H40085TE	GX ORLAND PARK 3, LLC	1.476	0.000	0.000	1.476	0.074	23-34-302-020	TEMPORARY	
0H40086TE	V-LAND ORLAND PARK 131ST, LLC	1.377	0.000	0.000	1.377	0.016	23-34-302-021 23-34-302-024	TEMPORARY	
0H40089TE-B	CONSOLIDATED HIGH SCHOOL DISTRICT NO. 230	51.153	N/A	N/A	N/A	0.194	23-33-401-012 23-33-401-013 23-33-401-024 23-33-401-025	TEMPORARY	
0H40163	SOUTHMOOR COUNTRY CLUB HOMEOWNERS' ASSOCIATION	12.354*	0.035	0.000	12.319	0.000	23-34-303-017	N/A	

F.A.P. ROUTE	SECTION	COUNTY	TOTAL SHEETS	SHEET NO.
330/US 45	131st St to 179th St	COOK	778	252F
STATION 342+00 TO STATION 355+00				
FED. ROAD DIST. NO. 1		ILLINOIS	FED. AID PROJECT	

0 50' 100' 200'
1" = 50'

* TOTAL HOLDING WAS DETERMINED BY INFORMATION FROM RECORDED SUBDIVISION PLATS. A BOUNDARY SURVEY WAS NOT PERFORMED ON ENTIRE TOTAL HOLDING.

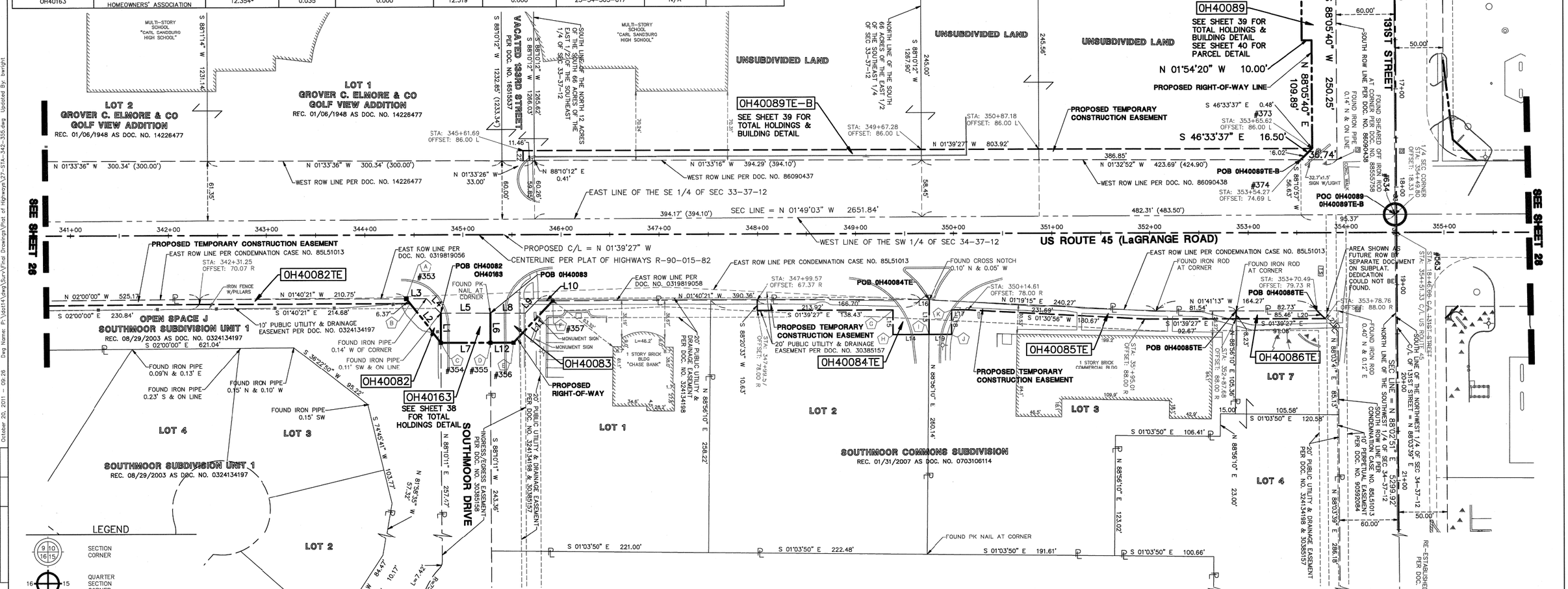

LEGEND

- SECTION CORNER
- QUARTER SECTION CORNER
- SECTION LINE
- QUARTER SECTION LINE
- QUARTER, QUARTER SECTION LINE
- PLATTED LOT LINE
- PROPERTY (DEED) LINE
- CENTERLINE
- EXISTING RIGHT-OF-WAY LINE
- PROPOSED RIGHT-OF-WAY LINE
- PROPOSED EASEMENT
- 129.32' MEASURED DIMENSION
- 129.32'(COMP.) COMPUTED DIMENSION
- ( ) RECORD DATA
- EXISTING BUILDING
- EX. CONCRETE CURB & GUTTER
- EX. EDGE OF PAVEMENT
- EX. GUARD RAIL
- PK NAIL SET
- REPLACED AFTER CONSTRUCTION
- IRON ROD SET
- IRON PIPE OR ROD FOUND
- CUT CROSS FOUND OR SET
- T1 T2 T3 **THESE STAKES REFERENCE FOUND OR SET MONUMENTATION.** WITNESS POINTS SET TO AID IN THE RECOVERY AND ESTABLISHMENT OF THE PROPOSED CENTERLINE OF CONSTRUCTION.
- **STAKING OF PROPOSED RIGHT OF WAY.** MARKER TO MONUMENT THE POSITION SHOWN. IDENTIFIED BY INSCRIPTION DATA AND SURVEYORS REGISTRATION NUMBER.
- POB POINT OF BEGINNING
- POC POINT OF COMMENCEMENT
- EX. MISCELLANEOUS MANHOLE (MH)

LEGEND

- EX. STORM MANHOLE (MH)
- EX. STORM CATCH BASIN (CB)
- EX. STORM INLET (INL)
- EX. FLARED END SECTION (FES)
- EX. SANITARY MANHOLE (SMH)
- EX. FIRE HYDRANT/AUX. VALVE
- EX. VALVE BOX
- EX. VALVE VAULT (V.V.)
- EX. IRRIGATION CONTROL BOX
- EX. ELECTRICAL METER
- EX. ELECTRICAL OUTLET
- EX. UTILITY POLE
- EX. UTILITY POLE WITH LIGHT
- EX. GUY WIRE
- EX. LIGHT STANDARD
- EX. STREET LIGHT
- EX. GROUND LIGHT
- EX. SIGN
- EX. DOUBLE POLE SIGN
- EX. MAILBOX
- EX. BOLLARD
- EX. FLAG POLE

LINE TABLE		
LINE	BEARING	LENGTH
L1	N 88°10'11" E	30.11'
L2	S 50°01'20" W	57.34'
L3	N 01°40'21" W	20.42'
L4	N 43°01'54" E	21.16'
L5	N 01°37'41" W	50.50'
L6	N 88°10'11" E	30.09'
L7	S 01°39'27" E	50.50'
L8	N 01°37'41" W	35.49'
L9	N 46°45'05" W	17.65'
L10	N 01°40'21" W	15.64'
L11	S 48°26'38" E	58.42'
L12	S 01°39'27" E	23.50'
L13	N 88°56'10" E	35.23'
L14	S 01°39'27" E	36.48'
L15	S 88°20'33" W	25.00'
L16	N 01°19'15" E	8.58'
L17	S 01°39'27" E	16.61'
L18	N 88°20'33" E	25.00'
L19	S 01°39'27" E	23.52'
L20	N 43°22'28" E	11.70'
L21	N 43°22'28" E	30.19'
L22	S 88°25'57" W	10.25'

CORNER	STATION	OFFSET
A	344+42.00	65.01 R
B	344+45.95	70.01 R
C	344+77.56	110.00 R
D	345+28.06	110.00 R
E	345+51.56	110.00 R
F	345+91.56	67.42 R
G	349+38.00	78.00 R
H	349+38.00	103.00 R
I	349+74.48	103.00 R
J	349+98.00	103.00 R
K	349+98.00	78.00 R

SEE SHEET 52 FOR COORDINATE VALUES FOR CENTERLINE POINTS, SECTIONS CORNERS AND ROW MONUMENTS

STATE OF ILLINOIS)
) SS
COUNTY OF DuPAGE)

I, WILLIAM W. WRIGHT, DO HEREBY DECLARE THAT I HAVE SURVEYED THE PLAT OF HIGHWAYS SHOWN HEREON IN SECTIONS 33 AND 34, TOWNSHIP 37 NORTH, RANGE 12 EAST OF THE THIRD PRINCIPAL MERIDIAN, AND SECTIONS 3, 4, 9, 10, 15, 16, 21, 22, 27, 28, 33 AND 34, TOWNSHIP 36 NORTH, RANGE 12 EAST OF THE THIRD PRINCIPAL MERIDIAN, ALL IN COOK COUNTY, ILLINOIS; THAT THE SURVEY IS TRUE AND COMPLETE AS SHOWN TO THE BEST OF MY KNOWLEDGE AND BELIEF; THAT THE PLAT CORRECTLY REPRESENTS SAID SURVEY; THAT ALL MONUMENTS FOUND AND ESTABLISHED ARE OF PERMANENT QUALITY AND OCCUPY THE POSITIONS SHOWN THEREON AND THAT THE MONUMENTS ARE SUFFICIENT TO ENABLE THE SURVEY TO BE RETRACED. MADE FOR THE DEPARTMENT OF TRANSPORTATION, STATE OF ILLINOIS.

DATED AT LOMBARD, ILLINOIS THIS 13TH DAY OF JANUARY A.D., 2012.

ILLINOIS PROFESSIONAL LAND SURVEYOR NO. 3502
LICENSE EXPIRES NOVEMBER 30, 2012

DESIGN FIRM LICENSE NO. 184003350
LICENSE EXPIRES APRIL 30, 2013

WILLIAM W. WRIGHT 3502 PROFESSIONAL LAND SURVEYOR STATE OF ILLINOIS LOMBARD, ILLINOIS

BEARINGS SHOWN HEREON ARE BASED ON ILLINOIS STATE PLANE COORDINATES, EAST ZONE, NORTH AMERICAN DATUM OF 1983. ALL COORDINATE AND DIMENSIONAL VALUES SHOWN HEREON ARE "GROUND" NOT "GRID".

COMBINED SCALE FACTOR (GROUND TO GRID) = 0.999966013

REVISION DATE	DESCRIPTION	INITIALS
01/13/12	REVISED OWNERSHIP FOR PARCEL 0H40084	WWW
10/17/11	ISSUED FINAL SURVEY TO IDOT	WWW
07/27/11	ADDED POINT NUMBERS FOR COORDINATE TABLE	WWW
02/14/11	PER ENGINEERING CONSULTANT MEMO	BJP

RECEIVED JAN 17 2012 PLATS & LEGALS

IDOT14 — 090746

SHEET 1 IS A COVER SHEET AND IS NOT RECORDED

Manhard CONSULTING LTD
700 Springer Drive, Lombard, IL 60148 ph:630.881.8000 fx:630.881.8928 manhard.com
Civil Engineers • Surveyors • Water Resource Engineers • Water & Wastewater Engineers
Construction Managers • Environmental Scientists • Landscape Architects • Planners

PLAT OF HIGHWAYS
STATE OF ILLINOIS
DEPARTMENT OF TRANSPORTATION

FAP 330/US ROUTE 45

SECTION: 131st St to 179th St COOK COUNTY

PROJECT: JOB NO. R-90-004-07

STATION 342+00 TO STATION 355+00

SCALE: 1" = 50' SHEET 27 OF 55

BUREAU OF LAND ACQUISITION
201 WEST CENTER COURT
SCHAUMBURG, ILLINOIS 60196

RECORDING: RECORDED ON AS DOCUMENT NO.

R.O.W. PLAT	BY	DATE
MADE		
CHECKED		
INKED		
NOTEBOOK NO.		

October 20, 2011 - 09:26 Dwg Name: P:\Idot14\dwg\Surv\Final Drawings\Plat of Highways\27-STA-342-355.dwg Updated By: bwright

PT OF NE 1/4 SEC 33 & NW 1/4 SEC 34, T37N, R12E OF THE 3RD PM, COOK CO. IL

PARCEL No.	OWNER	TOTAL HOLDINGS (ACRES)	PART TAKEN (ACRES)	PREVIOUSLY DEDICATED (ACRES)	REMAINDER (ACRES)	EASEMENT AREA (ACRES)	PERMANENT INDEX NUMBER	PURPOSE OF EASEMENT	ACQUIRED BY
0H40087	RDK VENTURES, LLC	1.492	72 SQ. FT. 0.002 ACRES	0.000	1.492	N/A	23–34–100–061 23–34–100–062	N/A	
0H40088	RDK VENTURES, LLC	1.242	0.016	0.000	1.226	314 SQ. FT. 0.007 ACRES	23–33–201–012	TEMPORARY	
0H40158TE	HFPWAL, LLC	2.649	N/A	0.000	N/A	0.018	23–34–100–071	TEMPORARY	
0H40159TE	DENNIS L. & LEONA J. CMUNT	1.804	N/A	0.000	N/A	0.037	23–34–100–016	TEMPORARY	
0H40160TE	JOHN, EILEEN, DAVID L. & STEVEN ZUMERCHIK	3.514	N/A	0.000	N/A	0.030	23–34–100–012	TEMPORARY	

F.A.P. ROUTE	SECTION	COUNTY	TOTAL SHEETS	SHEET NO.
330/US 45	131st St to 179th St	COOK	778	252G
STATION 355+00 TO STATION 368+00				
FED. ROAD DIST. NO. 1	ILLINOIS	FED. AID PROJECT		

0 50' 100' 200'
1" = 50'

LEGEND

- SECTION CORNER
- QUARTER SECTION CORNER
- SECTION LINE
- QUARTER SECTION LINE
- QUARTER, QUARTER SECTION LINE
- PLATTED LOT LINE
- PROPERTY (DEED) LINE
- CENTERLINE
- EXISTING RIGHT-OF-WAY LINE
- PROPOSED RIGHT-OF-WAY LINE
- PROPOSED EASEMENT
- 129.32' MEASURED DIMENSION
- 129.32'(COMP.) COMPUTED DIMENSION
- ( ) RECORD DATA
- EXISTING BUILDING
- EX. CONCRETE CURB & GUTTER
- EX. EDGE OF PAVEMENT
- EX. GUARD RAIL
- PK NAIL SET
- REPLACED AFTER CONSTRUCTION
- IRON ROD SET
- IRON PIPE OR ROD FOUND
- CUT CROSS FOUND OR SET
- T1 T2 T3 **THESE STAKES REFERENCE FOUND OR SET MONUMENTATION.** WITNESS POINTS SET TO AID IN THE RECOVERY AND ESTABLISHMENT OF THE PROPOSED CENTERLINE OF CONSTRUCTION.
- **STAKING OF PROPOSED RIGHT OF WAY.** MARKER TO MONUMENT THE POSITION SHOWN. IDENTIFIED BY INSCRIPTION DATA AND SURVEYORS REGISTRATION NUMEER.
- POB POINT OF BEGINNING
- POC POINT OF COMMENCEMENT
- EX. MISCELLANEOUS MANHOLE (MH)
- EX. STORM MANHOLE (MH)
- EX. STORM CATCH BASIN (CB)
- EX. STORM INLET (INL)
- EX. FLARED END SECTION (FES)
- EX. SANITARY MANHOLE (SMH)
- EX. FIRE HYDRANT/AUX. VALVE
- EX. VALVE BOX
- EX. VALVE VAULT (V.V.)
- EX. IRRIGATION CONTROL BOX
- EX. ELECTRICAL METER
- EX. ELECTRICAL OUTLET
- EX. UTILITY POLE
- EX. UTILITY POLE WITH LIGHT
- EX. GUY WIRE
- EX. LIGHT STANDARD
- EX. STREET LIGHT
- EX. GROUND LIGHT
- EX. SIGN
- EX. DOUBLE POLE SIGN
- EX. MAILBOX
- EX. BOLLARD
- EX. FLAG POLE

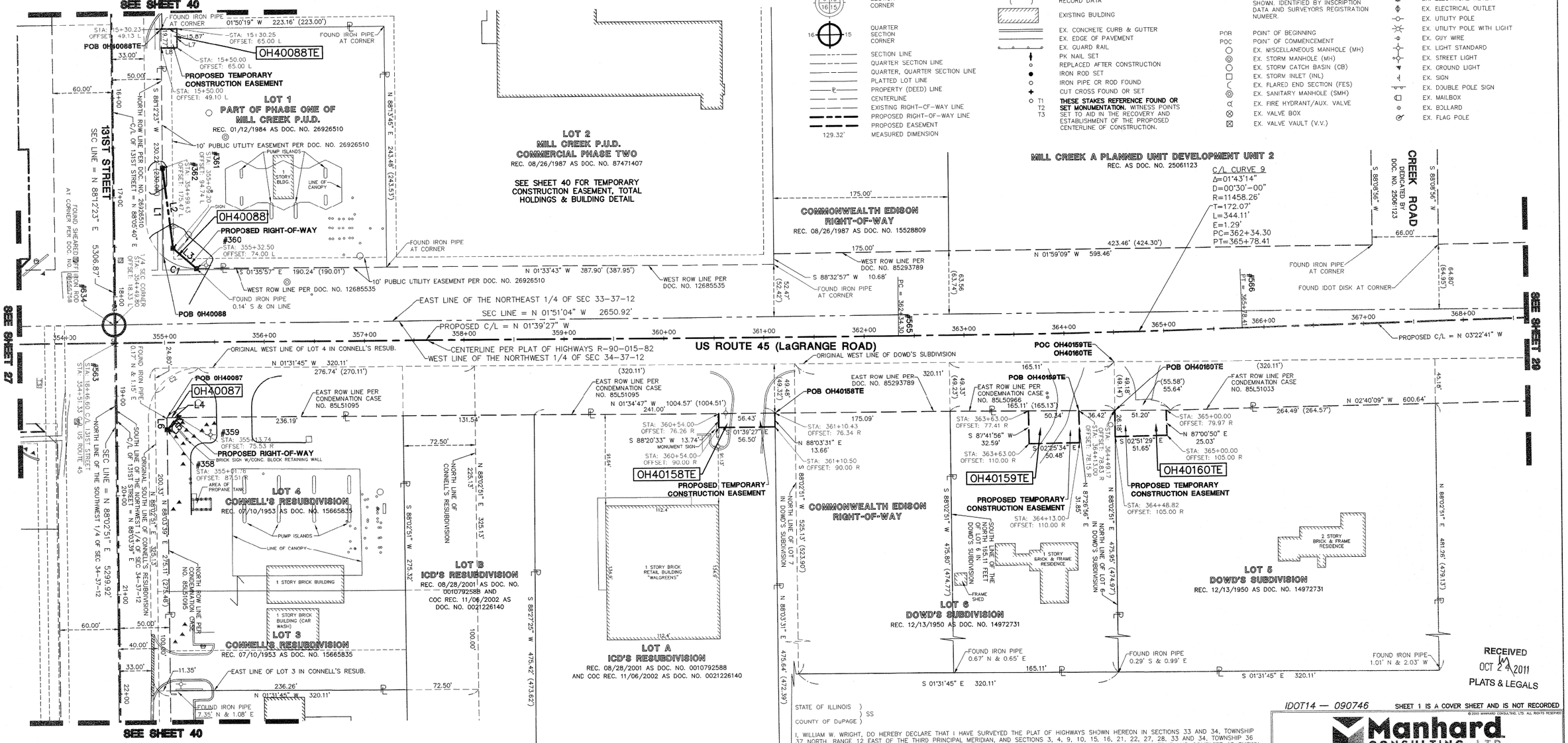

CURVE TABLE					
CURVE	RADIUS	LENGTH	CHORD BEARING	CHORD	DELTA
C1	50.00'	35.87'	N 18°57'13" E	35.11'	41°06'20"
C2	50.00'	52.13'	S 31°23'57" E	49.80'	59°44'24"

LINE TABLE		
LINE	BEARING	LENGTH
L1	S 88°12'23" W	89.11'
L2	N 81°26'35" E	81.32'
L3	N 40°00'41" E	31.19'
L4	N 01°34'47" W	12.04'
L5	S 46°39'54" E	16.94'
L6	S 88°03'39" W	12.00'
L7	N 88°05'40" E	19.75'
L8	S 01°54'20" E	15.90'

SEE SHEET 52 FOR COORDINATE VALUES FOR CENTERLINE POINTS, SECTIONS CORNERS AND ROW MONUMENTS

STATE OF ILLINOIS)
) SS
COUNTY OF DuPAGE)

I, WILLIAM W. WRIGHT, DO HEREBY DECLARE THAT I HAVE SURVEYED THE PLAT OF HIGHWAYS SHOWN HEREON IN SECTIONS 33 AND 34, TOWNSHIP 37 NORTH, RANGE 12 EAST OF THE THIRD PRINCIPAL MERIDIAN, AND SECTIONS 3, 4, 9, 10, 15, 16, 21, 22, 27, 28, 33 AND 34, TOWNSHIP 36 NORTH, RANGE 12 EAST OF THE THIRD PRINCIPAL MERIDIAN, ALL IN COOK COUNTY, ILLINOIS; THAT THE SURVEY IS TRUE AND COMPLETE AS SHOWN TO THE BEST OF MY KNOWLEDGE AND BELIEF; THAT THE PLAT CORRECTLY REPRESENTS SAID SURVEY; THAT ALL MONUMENTS FOUND AND ESTABLISHED ARE OF PERMANENT QUALITY AND OCCUPY THE POSITIONS SHOWN THEREON AND THAT THE MONUMENTS ARE SUFFICIENT TO ENABLE THE SURVEY TO BE RETRACED. MADE FOR THE DEPARTMENT OF TRANSPORTATION, STATE OF ILLINOIS.

DATED AT LOMBARD, ILLINOIS THIS 17TH DAY OF OCTOBER A.D., 2011.

ILLINOIS PROFESSIONAL LAND SURVEYOR NO. 3502
LICENSE EXPIRES NOVEMBER 30, 2012

DESIGN FIRM LICENSE NO. 184003350
LICENSE EXPIRES APRIL 30, 2013

BEARINGS SHOWN HEREON ARE BASED ON ILLINOIS STATE PLANE COORDINATES, EAST ZONE, NORTH AMERICAN DATUM OF 1983. ALL COORDINATE AND DIMENSIONAL VALUES SHOWN HEREON ARE "GROUND" NOT "GRID".

COMBINED SCALE FACTOR (GROUND TO GRID) = 0.999966013

WILLIAM W. WRIGHT 3502 PROFESSIONAL LAND SURVEYOR STATE OF ILLINOIS LOMBARD, ILLINOIS

REVISION DATE	DESCRIPTION	INITIALS
10/17/11	ISSUED FINAL SURVEY TO IDOT	WWW
07/27/11	ADDED POINT NUMBERS FOR COORDINATE TABLE	WWW
07/14/11	REVISED OWNERSHIP FOR PARCL 0087	WWW
02/14/11	PER ENGINEERING CONSULTANT MEMO	BJP

R.O.W. PLAT	DATE	BY
MADE		
CHECKED		
INKED		
NOTEBOOK NO.		

October 3, 2011 – 16:16 Dwg Name: P:\Dot14\Dwg\Sur\Final Drawings\Plat of Highways\28-STA-355-368.dwg Updated By: bwright

RECEIVED OCT 24 2011 PLATS & LEGALS

IDOT14 — 090746 SHEET 1 IS A COVER SHEET AND IS NOT RECORDED

Manhard CONSULTING LTD
700 Springer Drive, Lombard, IL 60148 ph:630.881.6000 fx:630.881.6555 manhard.com
Civil Engineers • Surveyors • Water Resource Engineers • Water & Wastewater Engineers
Construction Managers • Environmental Scientists • Landscape Architects • Planners

PLAT OF HIGHWAYS
STATE OF ILLINOIS
DEPARTMENT OF TRANSPORTATION
FAP 330/US RCUTE 45
SECTION: 131st St to 179th St COOK COUNTY
PROJECT: JOB NO. R-90-004-07
STATION 355+00 TO STATION 368+00
SCALE: 1" = 50' SHEET 28 OF 55

BUREAU OF LAND ACQUISITION
201 WEST CENTER COURT
SCHAUMBURG, ILLINOIS 60196

RECORDING: RECORDED ON AS DOCUMENT NO.

PT OF NE 1/4 SEC 33 & PT OF NW 1/4 SEC 34, T37N, R12E OF THE 3RD PM, COOK CO. IL.

F.A.P. ROUTE	SECTION	COUNTY	TOTAL SHEETS	SHEET NO.
330/US 45	131st St to 179th St	COOK	778	252H
STATION 368+00 TO STATION 382+00				
FED. ROAD DIST. NO. 1		ILLINOIS	FED. AID PROJECT	

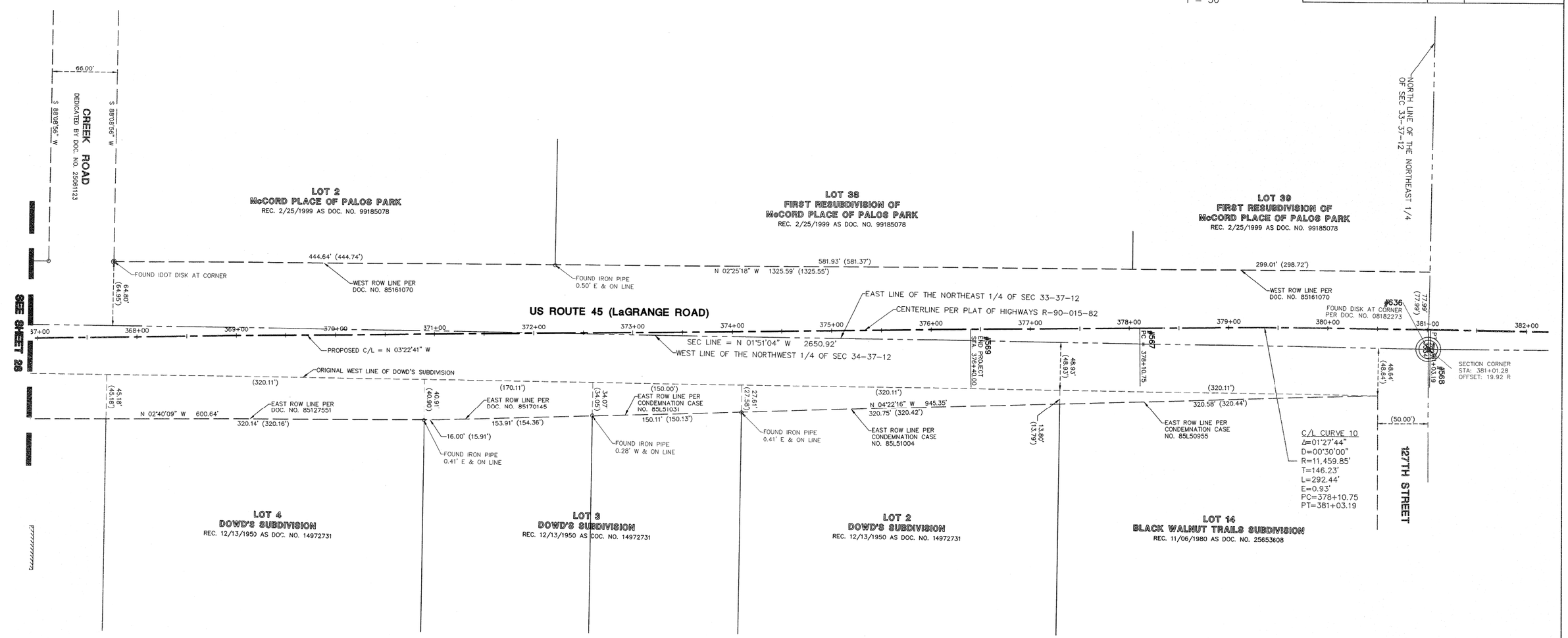

SEE SHEET 52 FOR COORDINATE VALUES FOR CENTERLINE POINTS, SECTIONS CORNERS AND ROW MONUMENTS

RECEIVED
OCT 24 2011
PLATS & LEGALS

R.O.W. PLAT	BY	DATE
MADE		
CHECKED		
INKED		
NOTEBOOK NO.		

July 28, 2011 - 14:46 Dwg Name: P:\Dot14\dwg\Surv\Final Drawings\Plat of Highways\29-STA-368-382.dwg Updated By: bwright

LEGEND

- SECTION CORNER
- QUARTER SECTION CORNER
- SECTION LINE
- QUARTER SECTION LINE
- QUARTER, QUARTER SECTION LINE
- PLATTED LOT LINE
- PROPERTY (DEED) LINE
- CENTERLINE
- EXISTING RIGHT-OF-WAY LINE
- PROPOSED RIGHT-OF-WAY LINE
- PROPOSED EASEMENT
- 129.32' MEASURED DIMENSION
- 129.32'(COMP.) COMPUTED DIMENSION
- ( ) RECORD DATA
- EXISTING BUILDING
- EX. CONCRETE CURB & GUTTER
- EX. EDGE OF PAVEMENT
- EX. GUARD RAIL
- PK NAIL SET
- REPLACED AFTER CONSTRUCTION
- IRON ROD SET
- IRON PIPE OR ROD FOUND
- CUT CROSS FOUND OR SET
- T1 T2 T3 **THESE STAKES REFERENCE FOUND OR SET MONUMENTATION.** WITNESS POINTS SET TO AID IN THE RECOVERY AND ESTABLISHMENT OF THE PROPOSED CENTERLINE OF CONSTRUCTION.
- **STAKING OF PROPOSED RIGHT OF WAY.** MARKER TO MONUMENT THE POSITION SHOWN. IDENTIFIED BY INSCRIPTION DATA AND SURVEYORS REGISTRATION NUMBER.
- POB POINT OF BEGINNING
- POC POINT OF COMMENCEMENT
- EX. MISCELLANEOUS MANHOLE (MH)
- EX. STORM MANHOLE (MH)
- EX. STORM CATCH BASIN (CB)
- EX. STORM INLET (INL)
- EX. FLARED END SECTION (FES)
- EX. SANITARY MANHOLE (SMH)
- EX. FIRE HYDRANT/AUX. VALVE
- EX. VALVE BOX
- EX. VALVE VAULT (V.V.)
- EX. IRRIGATION CONTROL BOX
- EX. ELECTRICAL METER
- EX. ELECTRICAL OUTLET
- EX. UTILITY POLE
- EX. UTILITY POLE WITH LIGHT
- EX. GUY WIRE
- EX. LIGHT STANDARD
- EX. STREET LIGHT
- EX. GROUND LIGHT
- EX. SIGN
- EX. DOUBLE POLE SIGN
- EX. MAILBOX
- EX. BOLLARD
- EX. FLAG POLE

STATE OF ILLINOIS)
) SS
COUNTY OF DuPAGE)

I, WILLIAM W. WRIGHT, DO HEREBY DECLARE THAT I HAVE SURVEYED THE PLAT OF HIGHWAYS SHOWN HEREON IN SECTIONS 33 AND 34, TOWNSHIP 37 NORTH, RANGE 12 EAST OF THE THIRD PRINCIPAL MERIDIAN, AND SECTIONS 3, 4, 9, 10, 15, 16, 21, 22, 27, 28, 33 AND 34, TOWNSHIP 36 NORTH, RANGE 12 EAST OF THE THIRD PRINCIPAL MERIDIAN, ALL IN COOK COUNTY, ILLINOIS; THAT THE SURVEY IS TRUE AND COMPLETE AS SHOWN TO THE BEST OF MY KNOWLEDGE AND BELIEF; THAT THE PLAT CORRECTLY REPRESENTS SAID SURVEY; THAT ALL MONUMENTS FOUND AND ESTABLISHED ARE OF PERMANENT QUALITY AND OCCUPY THE POSITIONS SHOWN THEREON AND THAT THE MONUMENTS ARE SUFFICIENT TO ENABLE THE SURVEY TO BE RETRACED. MADE FOR THE DEPARTMENT OF TRANSPORTATION, STATE OF ILLINOIS.

DATED AT LOMBARD, ILLINOIS THIS 17TH DAY OF OCTOBER A.D., 2011.

ILLINOIS PROFESSIONAL LAND SURVEYOR NO. 3502
LICENSE EXPIRES NOVEMBER 30, 2012

DESIGN FIRM LICENSE NO. 184003350
LICENSE EXPIRES APRIL 30, 2013

WILLIAM W. WRIGHT 3502 PROFESSIONAL LAND SURVEYOR STATE OF ILLINOIS LOMBARD, ILLINOIS

BEARINGS SHOWN HEREON ARE BASED ON ILLINOIS STATE PLANE COORDINATES, EAST ZONE, NORTH AMERICAN DATUM OF 1983. ALL COORDINATE AND DIMENSIONAL VALUES SHOWN HEREON ARE "GROUND" NOT "GRID".

COMBINED SCALE FACTOR (GROUND TO GRID) = 0.999966013

REVISION DATE	DESCRIPTION	INITIALS
10/17/11	ISSUED FINAL SURVEY TO IDOT	WWW
07/27/11	ADDED POINT NUMBERS FOR COORDINATE TABLE	WWW

IDOT14 -- 090746

SHEET 1 IS A COVER SHEET AND IS NOT RECORDED

Manhard CONSULTING LTD
700 Springer Drive, Lombard, IL 60148 p:630.691.8500 fx:630.691.8505 manhard.com
Civil Engineers • Surveyors • Water Resource Engineers • Water & Wastewater Engineers
Construction Managers • Environmental Scientists • Landscape Architects • Planners

PLAT OF HIGHWAYS
STATE OF ILLINOIS
DEPARTMENT OF TRANSPORTATION

FAP 330/US ROUTE 45

SECTION: 131st St to 179th St COOK COUNTY
PROJECT: JOB NO. R-90-004-07

STATION 368+00 TO STATION 382+00

SCALE: 1" = 50' SHEET 29 OF 55

BUREAU OF LAND ACQUISITION
201 WEST CENTER COURT
SCHAUMBURG, ILLINOIS 60196

RECORDING: RECORDED ON AS DOCUMENT NO.

PT OF SW 1/4 SEC 34, T37N, R12E OF THE 3RD PM, COOK CO. IL.

PARCEL No.	OWNER	TOTAL HOLDINGS (ACRES)	PART TAKEN (ACRES)	PREVIOUSLY DEDICATED (ACRES)	REMAINDER (ACRES)	EASEMENT AREA (ACRES)	PERMANENT INDEX NUMBER	PURPOSE OF EASEMENT	ACQUIRED BY
0H40080TE	CHARLES W. O'CONNELL AND MARLENE E. O'CONNELL, TRUSTEES OF THE O'CONNELL FAMILY TRUST DATED 10/31/2000	0.463	0.000	0.000	0.463	0.016	27-03-101-010	TEMPORARY	
0H40081A	MARQUETTE BANK AS TRUSTEE UNDER TRUST NO. 17350	69.950	406 SQ. FT. 0.009 ACRES	0.000	69.938	N/A	23-34-302-002	N/A	
0H40081B			125 SQ. FT. 0.003 ACRES						
0H40081TE-A			N/A			0.175		TEMPORARY	
0H40081TE-B						0.305		TEMPORARY	
0H40156TE	DAN ROGER LUPELLA AND PATRICIA M. LUPELLA TRUST DATED 09/02/2003	0.459	0.000	0.000	0.459	0.024	27-03-101-014	TEMPORARY	

F.A.P. ROUTE	SECTION	COUNTY	TOTAL SHEETS	SHEET NO.
330/US 45	131st St to 179th St	COOK	778	2521
135TH STREET				
FED. ROAD DIST. NO. 1	ILLINOIS	FED. AID PROJECT		

0 50' 100' 200'
1" = 50'

N

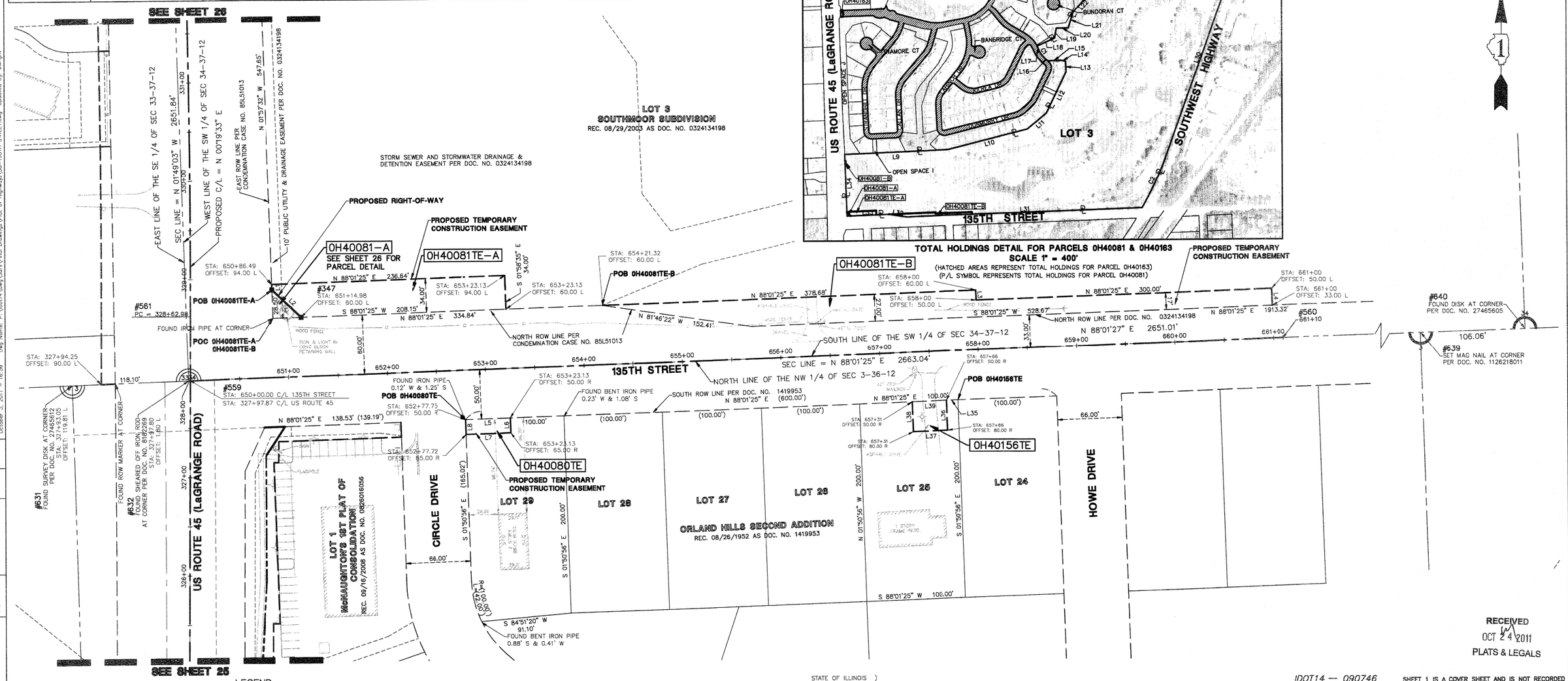

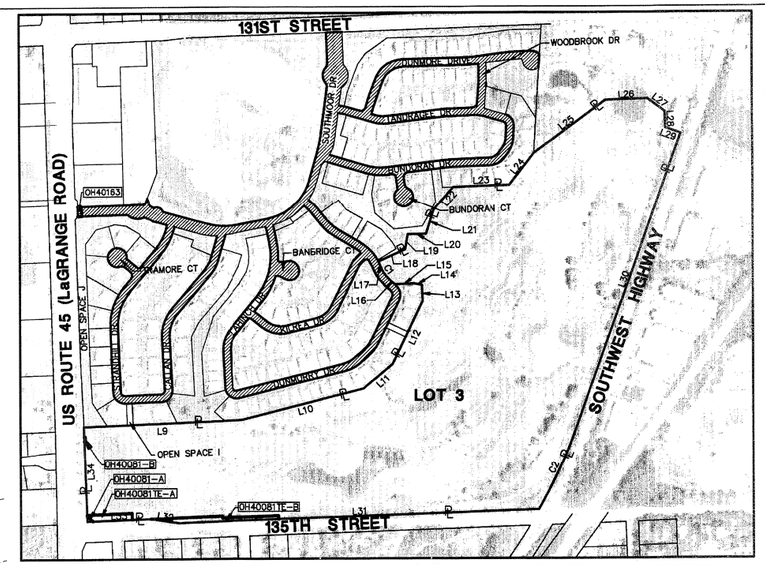

TOTAL HOLDINGS DETAIL FOR PARCELS 0H40081 & 0H40163
SCALE 1" = 400'
(HATCHED AREAS REPRESENT TOTAL HOLDINGS FOR PARCEL 0H40163)
(P/L SYMBOL REPRESENTS TOTAL HOLDINGS FOR PARCEL 0H40081)

LEGEND

- SECTION CORNER
- QUARTER SECTION CORNER
- SECTION LINE
- QUARTER SECTION LINE
- QUARTER, QUARTER SECTION LINE
- PLATTED LOT LINE
- PROPERTY (DEED) LINE
- CENTERLINE
- EXISTING RIGHT-OF-WAY LINE
- PROPOSED RIGHT-OF-WAY LINE
- PROPOSED EASEMENT
- 129.32' MEASURED DIMENSION
- 129.32'(COMP.) COMPUTED DIMENSION
- ( ) RECORD DATA
- EXISTING BUILDING
- EX. CONCRETE CURB & GUTTER
- EX. EDGE OF PAVEMENT
- EX. GUARD RAIL
- PK NAIL SET
- REPLACED AFTER CONSTRUCTION
- IRON ROD SET
- IRON PIPE OR ROD FOUND
- CUT CROSS FOUND OR SET
- T1 T2 T3 **THESE STAKES REFERENCE FOUND OR SET MONUMENTATION.** WITNESS POINTS SET TO AID IN THE RECOVERY AND ESTABLISHMENT OF THE PROPOSED CENTERLINE OF CONSTRUCTION.
- **STAKING OF PROPOSED RIGHT OF WAY.** MARKER TO MONUMENT THE POSITION SHOWN. IDENTIFIED BY INSCRIPTION DATA AND SURVEYORS REGISTRATION NUMBER.
- POB POINT OF BEGINNING
- POC POINT OF COMMENCEMENT
- EX. MISCELLANEOUS MANHOLE (MH)
- EX. STORM MANHOLE (MH)
- EX. STORM CATCH BASIN (CB)
- EX. STORM INLET (INL)
- EX. FLARED END SECTION (FES)
- EX. SANITARY MANHOLE (SMH)
- EX. FIRE HYDRANT/AUX. VALVE
- EX. VALVE BOX
- EX. VALVE VAULT (V.V.)
- EX. IRRIGATION CONTROL BOX
- EX. ELECTRICAL METER
- EX. ELECTRICAL OUTLET
- EX. UTILITY POLE
- EX. UTILITY POLE WITH LIGHT
- EX. GUY WIRE
- EX. LIGHT STANDARD
- EX. STREET LIGHT
- EX. GROUND LIGHT
- EX. SIGN
- EX. DOUBLE POLE SIGN
- EX. MAILBOX
- EX. BOLLARD
- EX. FLAG POLE

LINE TABLE

LINE	BEARING	LENGTH	LINE	BEARING	LENGTH
L1	N 01°57'32" W	5.50'	L21	N 17°23'16" E	134.37'
L2	N 46°58'04" W	40.30'	L22	N 40°55'29" E	159.21'
L3	S 01°58'35" E	10.00'	L23	N 88°03'27" E	300.67'
L4	S 01°58'35" E	17.00'	L24	N 38°03'38" E	214.09'
L5	N 88°01'25" E	45.38'	L25	N 53°27'39" E	472.00'
L6	S 01°58'35" E	15.00'	L26	N 88°03'27" E	223.00'
L7	S 88°01'25" W	45.41'	L27	S 52°34'31" E	113.51'
L8	N 01°50'56" W	15.00'	L28	S 01°56'33" E	87.55'
L9	N 87°47'03" E	835.05'	L29	S 70°24'15" E	84.47'
L10	N 75°46'28" E	670.01'	L30	S 19°35'45" W	1957.68'
L11	N 49°26'30" E	203.16'	L31	S 88°01'25" W	1913.21'
L12	N 25°40'10" E	368.80'	L32	N 81°46'22" W	152.42'
L13	N 02°05'06" W	87.06'	L33	S 88°01'25" W	334.84'
L14	N 79°07'12" W	42.47'	L34	N 01°57'32" W	499.74'
L15	S 87°54'54" W	102.22'	L35	S 88°01'25" W	11.75'
L16	N 47°22'36" W	36.53'	L36	S 01°58'35" E	30.00'
L17	N 24°18'40" W	38.26'	L37	S 88°01'25" W	35.00'
L18	N 65°41'20" E	155.96'	L38	N 01°58'35" W	30.00'
L19	N 09°47'50" E	79.79'	L39	N 88°01'25" E	35.00'
L20	N 88°25'57" E	97.24'			

SEE SHEET 52 FOR COORDINATE VALUES FOR CENTERLINE POINTS, SECTIONS CORNERS AND ROW MONUMENTS

STATE OF ILLINOIS)
) SS
COUNTY OF DuPAGE)

I, WILLIAM W. WRIGHT, DO HEREBY DECLARE THAT I HAVE SURVEYED THE PLAT OF HIGHWAYS SHOWN HEREON IN SECTIONS 33 AND 34, TOWNSHIP 37 NORTH, RANGE 12 EAST OF THE THIRD PRINCIPAL MERIDIAN, AND SECTIONS 3, 4, 9, 10, 15, 16, 21, 22, 27, 28, 33 AND 34, TOWNSHIP 36 NORTH, RANGE 12 EAST OF THE THIRD PRINCIPAL MERIDIAN, ALL IN COOK COUNTY, ILLINOIS; THAT THE SURVEY IS TRUE AND COMPLETE AS SHOWN TO THE BEST OF MY KNOWLEDGE AND BELIEF; THAT THE PLAT CORRECTLY REPRESENTS SAID SURVEY; THAT ALL MONUMENTS FOUND AND ESTABLISHED ARE OF PERMANENT QUALITY AND OCCUPY THE POSITIONS SHOWN THEREON AND THAT THE MONUMENTS ARE SUFFICIENT TO ENABLE THE SURVEY TO BE RETRACED. MADE FOR THE DEPARTMENT OF TRANSPORTATION, STATE OF ILLINOIS.

DATED AT LOMBARD, ILLINOIS THIS 17TH DAY OF OCTOBER A.D., 2011.

ILLINOIS PROFESSIONAL LAND SURVEYOR NO. 3502
LICENSE EXPIRES NOVEMBER 30, 2012

DESIGN FIRM LICENSE NO. 184003350
LICENSE EXPIRES APRIL 30, 2013

WILLIAM W. WRIGHT 3502 PROFESSIONAL LAND SURVEYOR STATE OF ILLINOIS LOMBARD, ILLINOIS

BEARINGS SHOWN HEREON ARE BASED ON ILLINOIS STATE PLANE COORDINATES, EAST ZONE, NORTH AMERICAN DATUM OF 1983. ALL COORDINATE AND DIMENSIONAL VALUES SHOWN HEREON ARE "GROUND" NOT "GRID".

COMBINED SCALE FACTOR (GROUND TO GRID) = 0.999966013

REVISION DATE	DESCRIPTION	INITIALS
10/17/11	ISSUED FINAL SURVEY TO IDOT	WWW
07/27/11	ADDED POINT NUMBERS FOR COORDINATE TABLE	WWW
02/14/11	PER ENGINEERING CONSULTANT MEMO	BJP
09/17/10	REVISED PER IDOT REVIEW	WWW

R.O.W. PLAT	BY	DATE
MADE		
CHECKED		
INKED		
NOTEBOOK NO.		

October 3, 2011 - 16:56 Dwg Name: P:\Idot14\dwg\Sur-V\Final Drawings\Plat of Highways\38-135TH STREET.dwg Updated By bwright

RECEIVED
OCT 24 2011
PLATS & LEGALS

IDOT14 — 090746 SHEET 1 IS A COVER SHEET AND IS NOT RECORDED

Manhard CONSULTING
750 Springer Drive, Lombard, IL 60148 • (630) 691-8200 • fax (630) 691-8555 • manhard.com
Civil Engineers • Surveyors • Water Resource Engineers • Water & Wastewater Engineers
Construction Managers • Environmental Scientists • Landscape Architects • Planners

PLAT OF HIGHWAYS
STATE OF ILLINOIS
DEPARTMENT OF TRANSPORTATION
FAP 330/US ROUTE 45
SECTION: 131st St to 179th St COOK COUNTY
PROJECT: JOB NO. R-90-004-07
135TH STREET

SCALE: 1" = 50' SHEET 38 OF 55

BUREAU OF LAND ACQUISITION
201 WEST CENTER COURT
SCHAUMBURG, ILLINOIS 60196

SEC 33, T37N, R12E OF THE 3RD PM, COOK CO. IL (PARCEL 0H40089 DETAIL)

PARCEL No.	OWNER	TOTAL HOLDINGS (ACRES)	PART TAKEN (ACRES)	PREVIOUSLY DEDICATED (ACRES)	REMAINDER (ACRES)	EASEMENT AREA (ACRES)	PERMANENT INDEX NUMBER	PURPOSE OF EASEMENT	ACQUIRED BY
0H40089	BOARD OF EDUCATION OF CONSOLIDATED HIGH SCHOOL DISTRICT #230	51.153	0.383	0.000	50.770	N/A	23-33-401-022 23-33-401-025	N/A	
0H40089TE-A		N/A	N/A	N/A	N/A	0.051	23-33-401-008 23-33-401-012	TEMPORARY	
0H40089TE-B		N/A	N/A	N/A	N/A	0.194	23-33-401-012 23-33-401-013 23-33-401-024 23-33-401-025	TEMPORARY	

F.A.P. ROUTE	SECTION	COUNTY	TOTAL SHEETS	SHEET NO.
330/US 45	131st St to 179th St	COOK	778	252J
TOTAL HOLDINGS PARCEL 0H40089				
FED. ROAD DIST. NO. 1	ILLINOIS	FED. AID PROJECT		

N

0 200' 400' 600'
1" = 200'

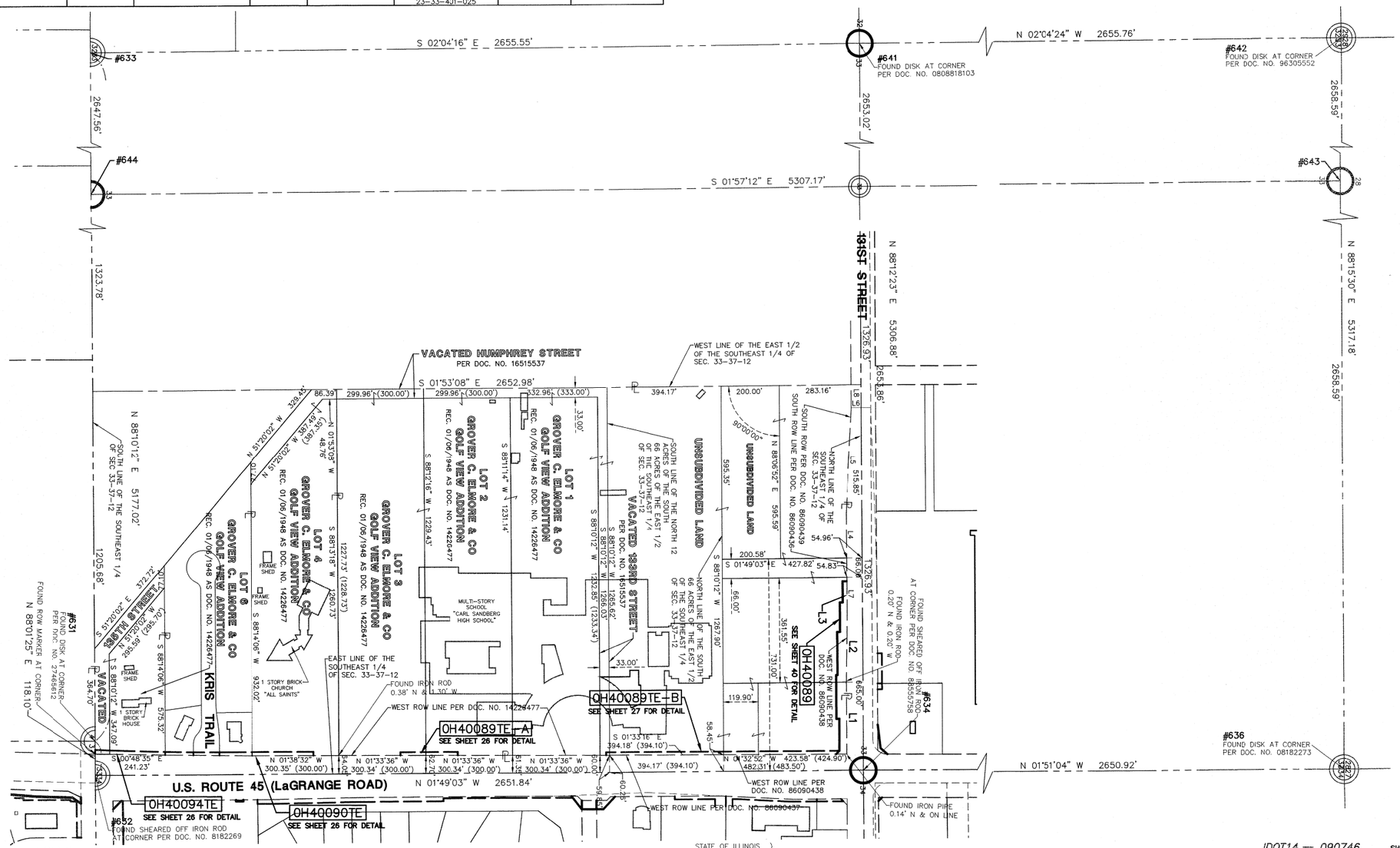

RECEIVED
OCT 24 2011
PLATS & LEGALS

LEGEND

- SECTION CORNER
- QUARTER SECTION CORNER
- SECTION LINE
- QUARTER SECTION LINE
- QUARTER, QUARTER SECTION LINE
- PLATTED LOT LINE
- PROPERTY (DEED) LINE
- CENTERLINE
- EXISTING RIGHT-OF-WAY LINE
- PROPOSED RIGHT-OF-WAY LINE
- PROPOSED EASEMENT
- 129.32' MEASURED DIMENSION
- 129.32'(COMP.) COMPUTED DIMENSION
- ( ) RECORD DATA
- EXISTING BUILDING
- EX. CONCRETE CURB & GUTTER
- EX. EDGE OF PAVEMENT
- EX. GUARD RAIL
- PK NAIL SET
- REPLACED AFTER CONSTRUCTION
- IRON ROD SET
- IRON PIPE OR ROD FOUND
- CUT CROSS FOUND OR SET
- T1 T2 T3 **THESE STAKES REFERENCE FOUND OR SET MONUMENTATION.** WITNESS POINTS SET TO AID IN THE RECOVERY AND ESTABLISHMENT OF THE PROPOSED CENTERLINE OF CONSTRUCTION.
- **STAKING OF PROPOSED RIGHT OF WAY.** MARKER TO MONUMENT THE POSITION SHOWN. IDENTIFIED BY INSCRIPTION DATA AND SURVEYORS REGISTRATION NUMBER.
- POB POINT OF BEGINNING
- POC POINT OF COMMENCEMENT
- EX. MISCELLANEOUS MANHOLE (MH)
- EX. STORM MANHOLE (MH)
- EX. STORM CATCH BASIN (CB)
- EX. STORM INLET (INL)
- EX. FLARED END SECTION (FES)
- EX. SANITARY MANHOLE (SMH)
- EX. FIRE HYDRANT/AUX. VALVE
- EX. VALVE BOX
- EX. VALVE VAULT (V.V.)
- EX. IRRIGATION CONTROL BOX
- EX. ELECTRICAL METER
- EX. ELECTRICAL OUTLET
- EX. UTILITY POLE
- EX. UTILITY POLE WITH LIGHT
- EX. GUY WIRE
- EX. LIGHT STANDARD
- EX. STREET LIGHT
- EX. GROUND LIGHT
- EX. SIGN
- EX. DOUBLE POLE SIGN
- EX. MAILBOX
- EX. BOLLARD
- EX. FLAG POLE

LINE TABLE		
LINE	BEARING	LENGTH
L1	S 88°05'40" W	250.25'
L2	S 89°17'16" W	240.05'
L3	S 88°05'40" W	104.03'
L4	S 88°05'10" W	155.76'
L5	N 88°24'18" W	360.67'
L6	N 01°54'58" W	33.97'
L7	S 88°06'19" W	118.29'
L8	S 88°12'23" W	80.08'

SEE SHEET 52 FOR COORDINATE VALUES FOR CENTERLINE POINTS, SECTIONS CORNERS AND ROW MONUMENTS

STATE OF ILLINOIS }
} SS
COUNTY OF DuPAGE }

I, WILLIAM W. WRIGHT, DO HEREBY DECLARE THAT I HAVE SURVEYED THE PLAT OF HIGHWAYS SHOWN HEREON IN SECTIONS 33 AND 34, TOWNSHIP 37 NORTH, RANGE 12 EAST OF THE THIRD PRINCIPAL MERIDIAN, AND SECTIONS 3, 4, 9, 10, 15, 16, 21, 22, 27, 28, 33 AND 34, TOWNSHIP 36 NORTH, RANGE 12 EAST OF THE THIRD PRINCIPAL MERIDIAN, ALL IN COOK COUNTY, ILLINOIS; THAT THE SURVEY IS TRUE AND COMPLETE AS SHOWN TO THE BEST OF MY KNOWLEDGE AND BELIEF; THAT THE PLAT CORRECTLY REPRESENTS SAID SURVEY; THAT ALL MONUMENTS FOUND AND ESTABLISHED ARE OF PERMANENT QUALITY AND OCCUPY THE POSITIONS SHOWN THEREON AND T-HAT THE MONUMENTS ARE SUFFICIENT TO ENABLE THE SURVEY TO BE RETRACED. MADE FOR THE DEPARTMENT OF TRANSPORTATION, STATE OF ILLINOIS.

DATED AT LOMBARD, ILLINOIS THIS 17TH DAY OF OCTOBER A.D., 2011.

ILLINOIS PROFESSIONAL LAND SURVEYOR NO. 3502
LICENSE EXPIRES NOVEMBER 30, 2012

DESIGN FIRM LICENSE NO. 184003350
LICENSE EXPIRES APRIL 30, 2013

WILLIAM W. WRIGHT 3502 PROFESSIONAL LAND SURVEYOR STATE OF ILLINOIS LOMBARD, ILLINOIS

BEARINGS SHOWN HEREON ARE BASED ON ILLINOIS STATE PLANE COORDINATES, EAST ZONE, NORTH AMERICAN DATUM OF 1983. ALL COORDINATE AND DIMENSIONAL VALUES SHOWN HEREON ARE "GROUND" NOT "GRID".

COMBINED SCALE FACTOR (GROUND TO GRID) = 0.999966013

REVISION DATE	DESCRIPTION	INITIALS
10/17/11	ISSUED FINAL SURVEY TO IDOT	WWW
07/27/11	ADDED POINT NUMBERS FOR COORDINATE TABLE	WWW
09/17/10	REVISED PER IDOT REVIEW	WWW

IDOT14 — 090746 SHEET 1 IS A COVER SHEET AND IS NOT RECORDED

Manhard CONSULTING LTD
700 Springer Drive, Lombard, IL 60148 ph:630.681.9500 fx:630.681.9585 manhard.com
Civil Engineers • Surveyors • Water Resource Engineers • Water & Wastewater Engineers
Construction Managers • Environmental Scientists • Landscape Architects • Planners

PLAT OF HIGHWAYS
STATE OF ILLINOIS
DEPARTMENT OF TRANSPORTATION

FAP 330/US ROUTE 45
SECTION: 131st St to 179th St COOK COUNTY
PROJECT: JOB NO. R-90-004-07
TOTAL HOLDINGS PARCEL 0H40089

SCALE: 1" = 200' SHEET 39 OF 55

BUREAU OF LAND ACQUISITION
201 WEST CENTER COURT
SCHAUMBURG, ILLINOIS 60196

R.O.W. PLAT	BY	DATE
MADE		
CHECKED		
INKED		
NOTEBOOK NO.		

October 3, 2011 - 17:00 Dwg Name: P:\dot14\dwg\Surv\Final Drawings\Plat of Highways\39-TOTAL HOLDINGS 0089.dwg Updated By: bwright

PT OF E 1/2 SEC 33 & PT OF W 1/2 SEC 34, T37N, R12E OF THE 3RD PM, COOK CO. IL (131 ST STREET)

PARCEL No.	OWNER	TOTAL HOLDINGS (ACRES)	PART TAKEN (ACRES)	PREVIOUSLY DEDICATED (ACRES)	REMAINDER (ACRES)	EASEMENT AREA (ACRES)	PERMANENT INDEX NUMBER	PURPOSE OF EASEMENT	ACQUIRED BY
0H40089	CONSOLIDATED HIGH SCHOOL DISTRICT NO. 230	51.153	0.383	0.000	50.770	N/A	23-33-401-022 23-33-401-025	N/A	
0H40157TE	REPUBLIC BANK & TRUST COMPANY, AS TRUSTEE UNDER TRUST NO. R-1001	0.542	N/A	N/A	N/A	0.031	23-34-100-073	TEMPORARY	
0H40161TE	IN RETAIL FUND SHOPPES AT MILL CREEK, LLC	14.555	N/A	N/A	N/A	0.036	23-33-201-015 23-33-201-018	TEMPORARY	

F.A.P. ROUTE	SECTION	COUNTY	TOTAL SHEETS	SHEET NO.
330/US 45	131st St to 179th St	COOK	778	252K
131ST STREET-STATION 11+50 TO STATION 24+00				
FED. ROAD DIST. NO. 1	ILLINOIS	FED. AID PROJECT		

SEE SHEET 52 FOR COORDINATE VALUES FOR CENTERLINE POINTS, SECTIONS CORNERS AND ROW MONUMENTS

0 50' 100' 200'
1" = 50'

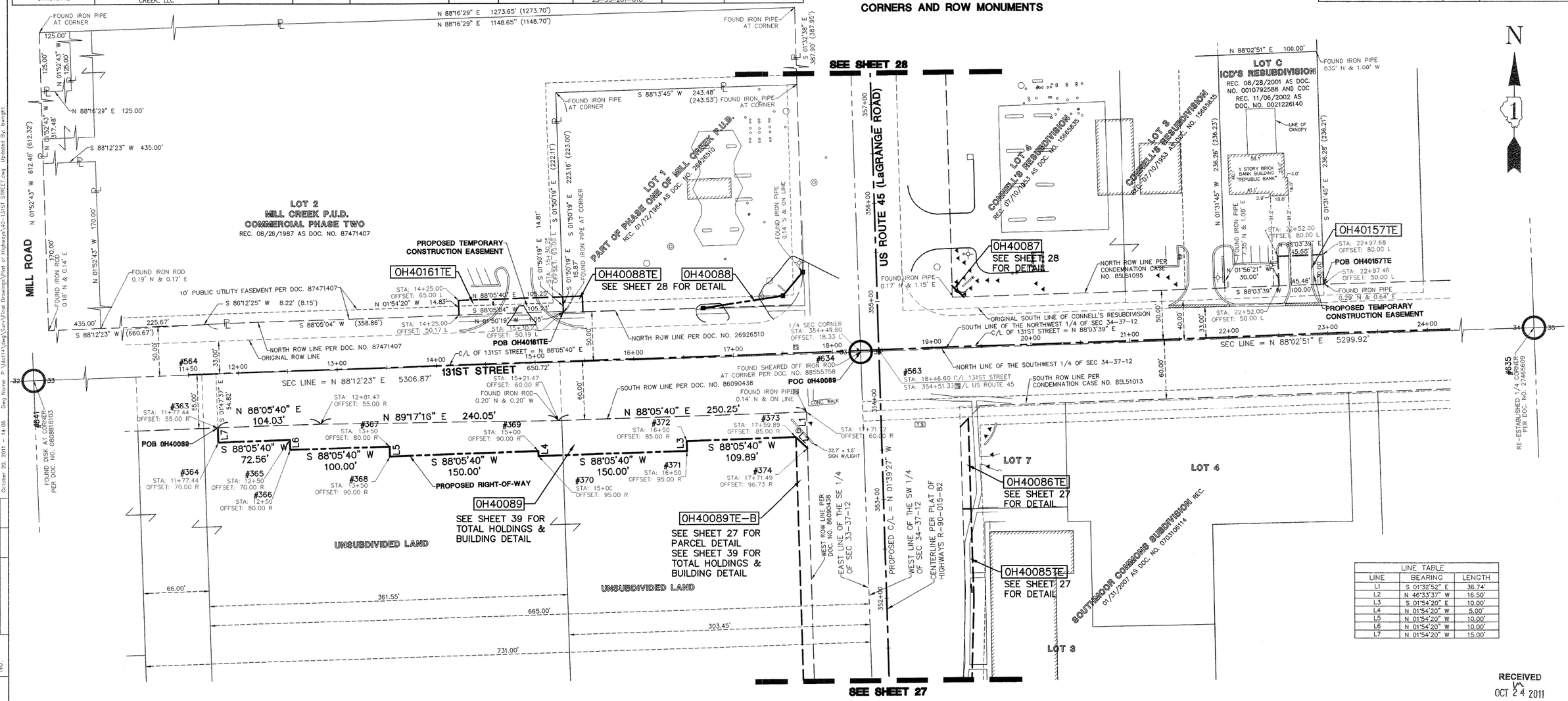

LINE TABLE		
LINE	BEARING	LENGTH
L1	S 01°32'52" E	36.74'
L2	N 46°33'37" W	16.50'
L3	S 01°54'20" E	10.00'
L4	N 01°54'20" W	5.00'
L5	N 01°54'20" W	10.00'
L6	N 01°54'20" W	10.00'
L7	N 01°54'20" W	15.00'

RECEIVED
OCT 24 2011
PLATS & LEGALS

October 20, 2011 – 14:06 Dwg Name: P:\Idot14\dwg\Surv\Final Drawings\Plat of Highways\40-131ST STREET.dwg Updated By: bwright

DATE	BY	MADE / CHECKED / INKED	NOTEBOOK NO.

R.O.W. PLAT

LEGEND

- SECTION CORNER
- QUARTER SECTION CORNER
- SECTION LINE
- QUARTER SECTION LINE
- QUARTER, QUARTER SECTION LINE
- PLATTED LOT LINE
- PROPERTY (DEED) LINE
- CENTERLINE
- EXISTING RIGHT-OF-WAY LINE
- PROPOSED RIGHT-OF-WAY LINE
- PROPOSED EASEMENT
- 129.32' MEASURED DIMENSION
- 129.32'(COMP.) COMPUTED DIMENSION
- ( ) RECORD DATA
- EXISTING BUILDING
- EX. CONCRETE CURB & GUTTER
- EX. EDGE OF PAVEMENT
- EX. GUARD RAIL
- PK NAIL SET
- REPLACED AFTER CONSTRUCTION
- IRON ROD SET
- IRON PIPE OR ROD FOUND
- CUT CROSS FOUND OR SET
- T1 T2 T3 **THESE STAKES REFERENCE FOUND OR SET MONUMENTATION.** WITNESS POINTS SET TO AID IN THE RECOVERY AND ESTABLISHMENT OF THE PROPOSED CENTERLINE OF CONSTRUCTION.
- **STAKING OF PROPOSED RIGHT OF WAY.** MARKER TO MONUMENT THE POSITION SHOWN. IDENTIFIED BY INSCRIPTION DATA AND SURVEYORS REGISTRATION NUMBER.
- POB POINT OF BEGINNING
- POC POINT OF COMMENCEMENT
- EX. MISCELLANEOUS MANHOLE (MH)
- EX. STORM MANHOLE (MH)
- EX. STORM CATCH BASIN (CB)
- EX. STORM INLET (INL)
- EX. FLARED END SECTION (FES)
- EX. SANITARY MANHOLE (SMH)
- EX. FIRE HYDRANT/AUX. VALVE
- EX. VALVE BOX
- EX. VALVE VAULT (V.V.)
- EX. IRRIGATION CONTROL BOX
- EX. ELECTRICAL METER
- EX. ELECTRICAL OUTLET
- EX. UTILITY POLE
- EX. UTILITY POLE WITH LIGHT
- EX. GUY WIRE
- EX. LIGHT STANDARD
- EX. STREET LIGHT
- EX. GROUND LIGHT
- EX. SIGN
- EX. DOUBLE POLE SIGN
- EX. MAILBOX
- EX. BOLLARD
- EX. FLAG POLE

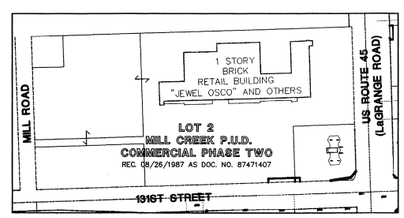

PARCEL OH40161TE BUILDING DETAIL
SCALE: 1" = 300'

STATE OF ILLINOIS)
) SS
COUNTY OF DuPAGE)

I, WILLIAM W. WRIGHT, DO HEREBY DECLARE THAT I HAVE SURVEYED THE PLAT OF HIGHWAYS SHOWN HEREON IN SECTIONS 33 AND 34, TOWNSHIP 37 NORTH, RANGE 12 EAST OF THE THIRD PRINCIPAL MERIDIAN, AND SECTIONS 3, 4, 9, 10, 15, 16, 21, 22, 27, 28, 33 AND 34, TOWNSHIP 36 NORTH, RANGE 12 EAST OF THE THIRD PRINCIPAL MERIDIAN, ALL IN COOK COUNTY, ILLINOIS; THAT THE SURVEY IS TRUE AND COMPLETE AS SHOWN TO THE BEST OF MY KNOWLEDGE AND BELIEF; THAT THE PLAT CORRECTLY REPRESENTS SAID SURVEY; THAT ALL MONUMENTS FOUND AND ESTABLISHED ARE OF PERMANENT QUALITY AND OCCUPY THE POSITIONS SHOWN THEREON AND THAT THE MONUMENTS ARE SUFFICIENT TO ENABLE THE SURVEY TO BE RETRACED. MADE FOR THE DEPARTMENT OF TRANSPORTATION, STATE OF ILLINOIS.

DATED AT LOMBARD, ILLINOIS THIS 17TH DAY OF OCTOBER A.D., 2011.

ILLINOIS PROFESSIONAL LAND SURVEYOR NO. 3502
LICENSE EXPIRES NOVEMBER 30, 2012

DESIGN FIRM LICENSE NO. 184003350
LICENSE EXPIRES APRIL 30, 2013

WILLIAM W. WRIGHT 3502 PROFESSIONAL LAND SURVEYOR STATE OF ILLINOIS LOMBARD, ILLINOIS

BEARINGS SHOWN HEREON ARE BASED ON ILLINOIS STATE PLANE COORDINATES, EAST ZONE, NORTH AMERICAN DATUM OF 1983. ALL COORDINATE AND DIMENSIONAL VALUES SHOWN HEREON ARE "GROUND" NOT "GRID".

COMBINED SCALE FACTOR (GROUND TO GRID) = 0.999966013

REVISION DATE	DESCRIPTION	INITIALS
10/17/11	ISSUED FINAL SURVEY TO IDOT	WWW
07/27/11	ADDED POINT NUMBERS FOR COORDINATE TABLE	WWW
03/22/11	REVISED PARCEL OH40161	WWW
02/14/11	PER ENGINEERING CONSULTANT MEMO	BJP
09/17/10	REVISED PER IDOT REVIEW	WWW

IDOT14 — 090746 SHEET 1 IS A COVER SHEET AND IS NOT RECORDED

Manhard CONSULTING LTD.
705 Springer Drive, Lombard, IL 60148 ph:630.691.8300 fx:630.691.8585 manhard.com
Civil Engineers • Surveyors • Water Resource Engineers • Water & Wastewater Engineers
Construction Managers • Environmental Scientists • Landscape Architects • Planners

PLAT OF HIGHWAYS
STATE OF ILLINOIS
DEPARTMENT OF TRANSPORTATION

FAP 330/US ROUTE 45

SECTION: 131st St to 179th St COOK COUNTY
PROJECT: JOB NO. R-90-004-07

131ST STREET-STATION 11+50 TO STATION 24+00

SCALE: 1" = 50' SHEET 40 OF 55

BUREAU OF LAND ACQUISITION
201 WEST CENTER COURT
SCHAUMBURG, ILLINOIS 60196

RECORDING RECORDER ON AS DOCUMENT NO.

COORDINATE TABLE

F.A.P. ROUTE	SECTION	COUNTY	TOTAL SHEETS	SHEET NO.
330/US 45	131st St to 179th St	COOK	778	252L
COORDINATE TABLE				
FED. ROAD DIST. NO. 1	ILLINOIS	FED. AID PROJECT		

PROPOSED PARCEL CORNERS			PROPOSED PARCEL CORNERS			PROPOSED PARCEL CORNERS			PROPOSED ROADWAY CENTERLINE			SECTION CORNERS			PROPOSED RAILROAD CENTERLINE		
POINT NUMBER	NORTHING	EASTING	POINT NUMBER	NORTHING	EASTING	POINT NUMBER	NORTHING	EASTING	POINT NUMBER	NORTHING	EASTING	POINT NUMBER	NORTHING	EASTING	POINT NUMBER	NORTHING	EASTING
200	1785573.527	1116198.653	300	1806267.463	1115468.561	400	1805222.136	1115384.108	500	1782331.377	1115677.466	600	1781759.874	1113564.572	800	1812285.175	1117010.855
201	1785819.064	1116190.116	301	1806417.330	1115463.640	401	1805058.160	1115389.694	501	1783264.134	1115834.997	601	1787063.046	1113398.293	801	1812236.552	1116975.395
202	1786606.022	1116162.755	302	1806596.852	1115458.269	402	1805043.169	1115390.205	502	1783778.376	1115960.527	602	1781842.911	1116230.335	802	1812083.444	1116838.367
203	1787087.874	1116146.002	303	1806702.000	1115455.390	403	1804893.256	1115395.313	503	1784485.476	1116090.917	603	1784488.890	1116136.139	803	1812010.896	1116779.643
204	1787112.417	1116169.195	304	1806841.461	1115451.873	404	1804783.319	1115399.059	504	1784494.250	1116385.316	604	1781920.217	1118899.739	804	1811867.694	1116675.027
205	1787195.103	1116157.097	305	1807001.922	1115448.255	405	1804610.293	1115404.954	506	1785491.434	1116136.468	605	1787219.284	1118734.218	805	1811814.846	1116633.448
206	1787209.549	1116141.810	306	1807151.902	1115445.287	406	1804463.953	1115409.940	507	1787142.835	1116079.052	606	1784647.100	1121491.649	806	1811684.643	1116523.263
207	1787658.789	1116126.465	307	1807226.897	1115443.952	407	1804434.654	1115388.744	508	1787149.470	1115939.486	607	1789785.975	1115977.258	807	1811661.322	1116503.528
208	1787659.131	1116136.459	308	1807292.362	1115442.869	408	1804354.673	1115390.656	509	1789786.430	1115988.750	608	1787142.288	1116060.059	808	1810744.328	1115727.522
209	1787679.119	1116135.776	309	1807324.611	1115455.214	409	1804325.905	1115414.643	511	1792439.795	1115898.902	609	1792351.407	1113232.244	809	1810419.414	1115452.564
210	1787678.778	1116125.782	310	1807341.344	1115491.909	410	1803732.700	1115434.855	512	1792447.730	1116171.635	610	1792507.788	1118563.157	810	1812016.006	1116814.553
211	1787605.580	1116121.461	311	1807344.766	1115562.859	411	1803441.365	1115444.781	513	1792450.859	1116448.013	611	1789629.360	1110656.186	811	1811806.323	1116659.181
212	1788379.736	1116101.838	312	1807347.370	1115562.778	412	1803151.358	1115454.662	514	1792453.957	1116724.371	612	1786980.868	1110736.454	812	1811777.798	1116637.223
213	1788380.077	1116111.832	313	1809210.115	1115424.033	413	1803133.847	1115439.073	515	1792405.592	1115075.273	613	1792272.506	1110569.264	813	1811573.948	1116474.273
214	1788400.066	1116111.150	314	1809275.748	1115423.827	414	1803116.913	1115349.198	516	1792418.699	1115351.356	614	1789941.649	1121327.092	814	1810570.719	1115659.765
215	1788399.724	1116101.155	315	1809414.155	1115423.994	415	1803019.447	1115437.070	517	1792431.817	1115627.440	615	1792429.661	1115894.457	815	1810520.327	1115618.773
216	1788466.453	1116098.876	316	1809654.003	1115424.282	416	1802994.861	1115457.993	518	1792908.635	1115882.926	616	1795109.519	1115797.167	816	1810390.145	1115510.853
217	1788843.239	1116086.006	317	1809694.512	1115424.331	417	1802893.062	1115461.461	519	1793289.013	1115860.344	617	1795247.328	1121153.583	817	1810340.521	1115468.933
218	1789055.036	1116078.771	318	1809739.531	1115424.385	418	1802893.130	1115463.460	520	1793669.330	1115837.762	618	1794922.747	1110495.088	818	1808509.137	1113918.860
219	1789055.446	1116090.764	319	1810195.211	1115424.934	419	1802660.299	1115471.393	521	1793768.634	1115834.378	619	1797673.908	1113060.228	819	1808144.357	1113577.403
220	1789072.436	1116090.183	320	1810235.152	1115424.982	420	1802635.313	1115472.244	523	1794920.936	1115795.118	620	1797836.163	1118382.927	820	1808027.529	1113469.555
221	1789072.026	1116078.190	321	1810240.254	1115429.298	421	1802466.319	1115478.002	524	1794928.441	1115794.862	621	1797762.393	1115701.226	821	1807926.167	1113381.721
222	1789331.281	1116069.335	322	1810410.089	1115424.609	422	1802312.264	1115483.251	525	1794936.836	1116027.469	622	1800417.093	1115610.825	822	1807802.794	1113281.426
223	1789494.494	1116074.532	323	1810625.709	1115407.500	423	1802312.336	1115485.355	527	1801744.542	1115562.629	623	1803071.927	1115520.896	823	1807767.822	1113253.397
224	1789513.198	1116075.127	324	1810701.488	1115407.895	424	1801814.198	1115502.617	528	1801754.841	1115841.538	624	1805722.524	1115443.276	824	1812276.243	1117021.394
225	1789690.685	1116069.065	325	1811254.742	1115410.782	425	1801781.725	1115470.457	529	1801731.010	1115122.767	625	1805881.553	1120804.466	825	1812004.136	1116822.949
226	1789739.936	1116114.135	326	1811360.882	1115411.336	426	1801701.975	1115479.803	530	1803071.825	1115517.406	626	1808366.734	1115365.986	826	1811794.453	1116667.577
227	1789839.304	1116090.958	327	1811458.283	1115410.870	427	1801678.558	1115504.842	531	1803074.823	1115517.304	627	1808449.349	1118042.628	827	1811765.928	1116645.619
228	1789861.006	1116066.270	328	1811458.331	1115420.870	428	1801499.836	1115510.931	532	1803079.943	1115790.915	628	1808271.859	1112752.134	828	1811562.079	1116482.669
229	1791965.705	1115995.003	329	1811478.331	1115420.774	429	1801299.951	1115517.742	533	1803083.034	1115851.371	629	1811023.576	1115292.625	829	1810561.911	1115670.647
230	1791965.266	1115980.010	330	1811478.283	1115410.775	430	1800796.241	1115534.904	534	1803089.934	1115945.741	630	1810843.871	1110041.888	830	1810511.487	1115629.629
231	1792181.846	1116072.676	331	1811643.660	1115409.084	431	1800706.226	1115601.010	535	1803093.314	1116014.062	631	1813663.277	1115220.201	831	1810381.115	1115521.552
232	1792370.254	1115966.296	332	1811643.659	1115406.658	432	1800630.321	1115507.538	536	1803096.449	1116136.582	632	1813657.350	1115338.227	832	1810331.461	1115479.606
233	1792381.945	1115973.219	333	1811790.852	1115407.053	433	1800631.335	1115540.522	537	1803055.275	1114850.791	633	1813487.950	1110045.822	833	1808813.291	1114194.635
234	1792490.966	1116279.874	334	1811790.825	1115417.053	434	1800475.425	1115545.834	538	1804398.679	1115472.199	634	1816307.851	1115254.120	834	1808759.999	1114149.249
235	1792497.064	1116180.610	335	1811814.825	1115417.117	435	1799915.083	1115564.926	539	1804397.430	1115472.242	635	1816488.430	1120550.967	835	1808669.663	1114068.830
236	1792491.414	1115987.623	336	1811814.852	1115407.117	436	1799735.983	1115571.028	540	1804408.206	1115864.413	636	1818957.392	1115168.488	836	1808618.414	1114021.150
237	1792516.268	1115961.334	337	1812692.980	1115407.750	437	1799481.421	1115579.701	542	1805719.540	1115427.195	637	1800248.760	1110349.523	837	1811568.332	1116439.582
238	1792910.908	1115947.889	338	1812946.420	1115409.161	438	1799162.639	1115590.563	543	1805718.179	1115581.287	638	1803152.005	1118204.958	838	1811493.547	1116382.452
239	1793294.502	1115925.112	339	1812942.140	1115414.156	439	1799136.672	1115561.430	544	1805706.643	1116057.017	639	1813745.109	1117881.334	839	1810891.488	1115872.959
240	1793497.565	1115910.681	340	1813222.716	1115409.445	440	1799137.654	1115591.414	545	1805716.146	1115272.972	640	1813748.778	1117987.656	840	1810822.774	1115808.654
241	1793498.424	1115925.656	341	1813272.581	1115408.608	441	1799087.683	1115593.117	547	1806271.229	1115408.399	641	1816141.761	1109949.853			
242	1793518.353	1115924.539	342	1813300.839	1115408.134	442	1799087.122	1115576.003	548	1807335.854	1115382.184	642	1818795.781	1109853.766			
243	1793517.533	1115909.561	343	1813325.074	1115409.532	443	1798780.741	1115587.025	549	1807375.636	1115381.611	643	1818876.587	1112511.127			
244	1793535.006	1115908.625	344	1813454.332	1115416.988	444	1795886.615	1115692.926	552	1807771.947	1115375.565	644	1813572.499	1112892.029			
245	1793671.543	1115902.724	345	1813580.461	1115416.748	445	1795849.721	1115694.183	553	1808832.815	1115352.883	645	1784322.653	1110814.370			
246	1793734.856	1115900.567	346	1813610.698	1115436.103	446	1795849.218	1115679.441	555	1809056.016	1115346.726						
247	1794021.722	1115890.793	347	1813721.342	1115452.874	447	1795750.393	1115682.809	556	1809275.845	1115343.828						
248	1794131.659	1115887.047	348	1813748.842	1115423.417	448	1795751.041	1115701.818	557	1810172.316	1115344.906						
249	1794291.210	1115881.611	349	1814143.863	1115409.906	449	1795469.457	1115711.422	558	1810194.017	1115344.932						
250	1794423.321	1115884.655	350	1814144.034	1115414.903	450	1795304.818	1115717.001	559	1813657.412	1115340.032						
251	1794501.439	1115886.455	351	1814169.019	1115414.049	451	1794987.464	1115727.814	560	1813695.634	1116449.372						
252	1794858.820	1115874.279	352	1814168.848	1115409.052	452	1794965.343	1115708.484	561	1813722.524	1115340.402						
253	1794879.377	1115893.426	353	1815302.883	1115366.576	453	1794885.232	1115706.871	562	1814119.148	1115335.792						
254	1794892.206	1115968.736	354	1815339.726	1115410.518	454	1794857.265	1115732.250	563	1816309.936	1115272.398						
255	1794976.530	1116016.952	355	1815390.204	1115409.057	455	1794690.495	1115737.932	564	1816286.744	1114576.183						
256	1794971.706	1115884.072	356	1815413.698	1115408.378	456	1793816.531	1115767.709	565	1817092.553	1115249.751						
257	1794992.793	1115861.444	357	1815452.450	1115364.663	457	1793806.216	1115758.054	566	1817436.318	1115234.635						
258	1795837.355	1115835.887	358	1816362.850	1115358.413	458	1793733.098	1115755.543	567	1818666.517	1115162.020						
259	1795837.897	1115850.878	359	1816374.479	1115346.088	459	1793718.587	1115771.046	568	1818958.617	1115148.515						
260	1795877.876	1115849.432	360	1816388.905	1115196.084	460	1793667.117	1115772.800	569	1818496.053	1115172.082						
261	1795877.334	1115834.442	361	1816365.012	1115176.028	461	1793535.467	1115778.426									
262	1800627.835	1115660.711	362	1816352.912	1115095.610	462	1793533.876	1115747.467									
263	1800749.361	1115656.571	363	1816232.687	1114605.437	463	1793430.891	1115753.460									
264	1800749.702	1115666.565	364	1816217.696	1114605.936	464	1793431.864	1115784.462									
265	1800779.685	1115665.543	365	1816220.109	1114678.456	465	1793283.523	1115795.576									
266	1800779.344	1115655.549	366	1816210.114	1114678.788	466	1793264.676	1115797.150									
267	1800921.828	1115650.694	367	1816213.440	1114778.733	467	1793113.485	1115808.039									
268	1800986.807	1115648.480	368	1816203.445	1114779.066	468	1792503.325	1115827.822									
269	1801215.512	1115640.688	369	1816208.433	1114928.983	469	1792476.996	1115803.072									
270	1801235.546	1115640.006	370	1816203.436	1114929.149	470	1792468.422	1115511.379									
271	1801489.399	1115631.356	371	1816208.424	1115079.066	471	1792484.415	1115510.908									
272	1801674.083	1115625.064	372	1816218.419	1115078.734	472	1792483.534	1115480.921									
273	1801714.838	1115653.090	373	1816222.073	1115188.566	473	1792467.541	1115481.392									
274	1801787.727	1115648.514	374	1816210.730	1115200.544	474	1806273.267	1115468.364									
275	1801814.121	1115620.293	375	1810270.494	1115258.398												
276	1801991.892	1115614.236	376	1810045.603	1115264.608												
277	1802047.015	1115612.358	377	1809562.522	1115272.945												
278	1802306.864	1115603.504	378	1809362.598	1115278.465												
279	1802862.647	1115584.568	379	1807945.637	1115312.743												
280	1802992.931	1115580.129	380	1807814.527	1115314.900												
281	1803019.404	1115604.744	381	1807771.036	1115315.572												
282	1803023.256	1115733.853	382	1807745.619	1115315.957												
283	1803028.254	1115733.704	383	1807448.515	1115320.467												
284	1803124.351	1115601.393	384	1807426.265	1115309.383												
285	1803149.639	1115574.349	385	1807404.551	1115290.458												
286	1804315.190	1115535.444	386	1807338.750	1115297.125												
287	1804356.840	1115579.646	387	1807313.341	1115322.523												
288	1804358.314	1115581.211	388	1807214.650	1115324.145												
289	1804433.292	1115579.390	389	1807042.032	1115327.397												
290	1804444.590	1115567.456	390	1806862.129	1115331.348												
291	1804480.105	1115529.940	391	1806711.652	1115335.094												
292	1805633.324	1115491.447	392	1806415.845	1115343.627												
293	1805654.709	1115531.457	393	1806269.181	1115348.433												
294	1805666.998	1115700.747	394	1806215.952	1115350.247												
295	1805667.404	1115865.277	395	1805781.534	1115365.048												
296	1805776.077	1115520.744	396	1805758.831	1115343.927												
297	1805804.736	1115484.327	397	1805678.901	1115347.287												
298	1805898.723	1115481.125	398	1805658.477	1115369.241												
299	1806092.635	1115474.518	399	1805435.006	1115376.855												

STATE OF ILLINOIS)
) SS
COUNTY OF DuPAGE)

I, WILLIAM W. WRIGHT, DO HEREBY DECLARE THAT I HAVE SURVEYED THE PLAT OF HIGHWAYS SHOWN HEREON IN SECTIONS 33 AND 34, TOWNSHIP 37 NORTH, RANGE 12 EAST OF THE THIRD PRINCIPAL MERIDIAN, AND SECTIONS 3, 4, 9, 10, 15, 16, 21, 22, 27, 28, 33 AND 34, TOWNSHIP 36 NORTH, RANGE 12 EAST OF THE THIRD PRINCIPAL MERIDIAN, ALL IN COOK COUNTY, ILLINOIS; THAT THE SURVEY IS TRUE AND COMPLETE AS SHOWN TO THE BEST OF MY KNOWLEDGE AND BELIEF; THAT THE PLAT CORRECTLY REPRESENTS SAID SURVEY; THAT ALL MONUMENTS FOUND AND ESTABLISHED ARE OF PERMANENT QUALITY AND OCCUPY THE POSITIONS SHOWN THEREON AND THAT THE MONUMENTS ARE SUFFICIENT TO ENABLE THE SURVEY TO BE RETRACED, MADE FOR THE DEPARTMENT OF TRANSPORTATION, STATE OF ILLINOIS.

DATED AT LOMBARD, ILLINOIS THIS 9TH DAY OF NOVEMBER A.D., 2011.

ILLINOIS PROFESSIONAL LAND SURVEYOR NO. 3502
LICENSE EXPIRES NOVEMBER 30, 2012

DESIGN FIRM LICENSE NO. 184003350
LICENSE EXPIRES APRIL 30, 2013

WILLIAM W. WRIGHT 3502 PROFESSIONAL LAND SURVEYOR STATE OF ILLINOIS LOMBARD, ILLINOIS

BEARINGS SHOWN HEREON ARE BASED ON ILLINOIS STATE PLANE COORDINATES, EAST ZONE, NORTH AMERICAN DATUM OF 1983. ALL COORDINATE AND DIMENSIONAL VALUES SHOWN HEREON ARE "GROUND" NOT "GRID".

COMBINED SCALE FACTOR (GROUND TO GRID) = 0.999966013

IDOT14 — 090746

SHEET 1 IS A COVER SHEET AND IS NOT RECORDED

Manhard CONSULTING LTD
700 Springer Drive, Lombard, IL 60148 ph:630.691.8500 fx:630.691.8599 manhard.com
Civil Engineers • Surveyors • Water Resource Engineers • Water & Wastewater Engineers
Construction Managers • Environmental Scientists • Landscape Architects • Planners

RECEIVED
NOV 09 2011
PLATS & LEGALS

PLAT OF HIGHWAYS
STATE OF ILLINOIS
DEPARTMENT OF TRANSPORTATION
FAP 330/US ROUTE 45
SECTION: 131st St to 179th St COOK COUNTY
PROJECT: JOB NO. R-90-004-07
COORDINATE TABLE

SCALE: N.T.S. SHEET 52 OF 55

BUREAU OF LAND ACQUISITION
201 WEST CENTER COURT
SCHAUMBURG, ILLINOIS 60196

REVISION DATE	DESCRIPTION	INITIALS
11/05/11	REVISED NO'S 255, 256 & 525	WWW
10/17/11	ISSUED FINAL SURVEY TO IDOT	WWW
07/27/11	ADDED SHEET 52 (COORDINATE TABLE)	WWW

R.O.W. PLAT	MADE	BY	DATE
	CHECKED		
NOTEBOOK NO.	INKED		

November 5, 2011 – 12:21 Dwg Name: P:\Dot14\dwg\Surv\Final Drawings\Plat of Highways\02-COORDINATE SHEET.dwg Updated By: bwright

RECORDING: RECORDED ON AS DOCUMENT NO.

CENTERLINE RECOVERY TIES DETAIL

F.A.P. ROUTE	SECTION	COUNTY	TOTAL SHEETS	SHEET NO.
330/US 45	131st St to 179th St	COOK	778	252M
CENTERLINE RECOVERY TIE DETAILS				
FED. ROAD DIST. NO. 1		ILLINOIS	FED. AID PROJECT	

DETAIL OF POINT NO. 553, 555 & 556
SCALE: 1" = 120'

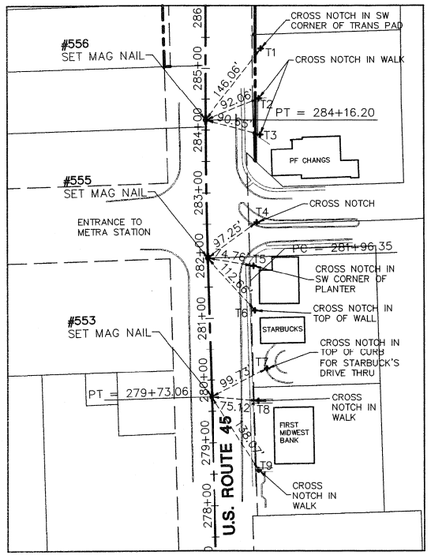

DETAIL OF POINT NO. 557 & 558
SCALE: 1" = 120'

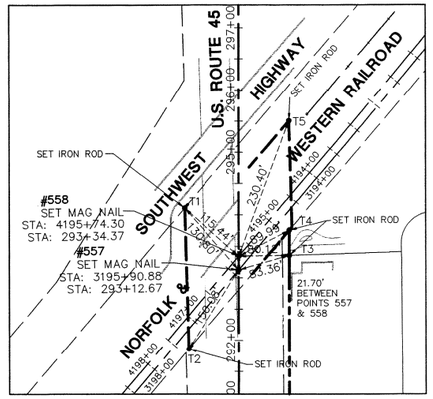

DETAIL OF POINT NO. 559, 560, 561 & 562
SCALE: 1" = 120'

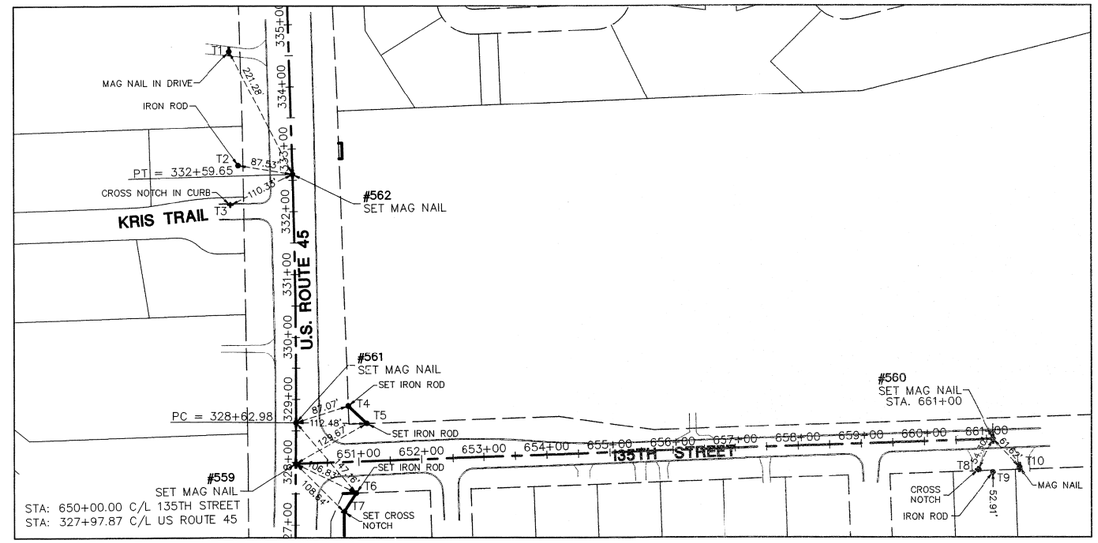

DETAIL OF POINT NO. 563 & 564
SCALE: 1" = 120'

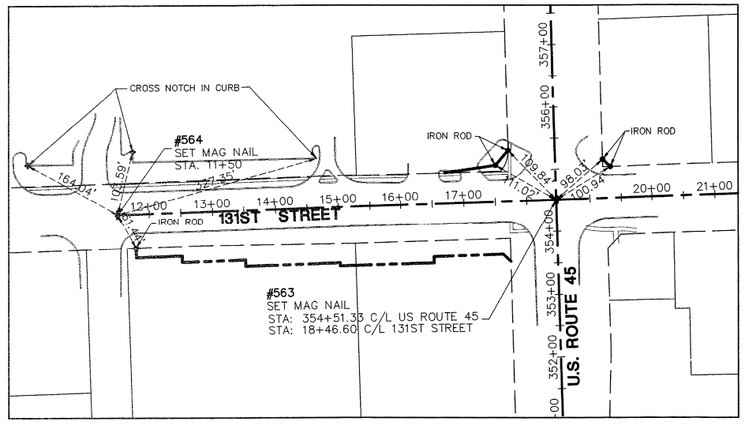

DETAIL OF POINT NO. 565 & 566
SCALE: 1" = 120'

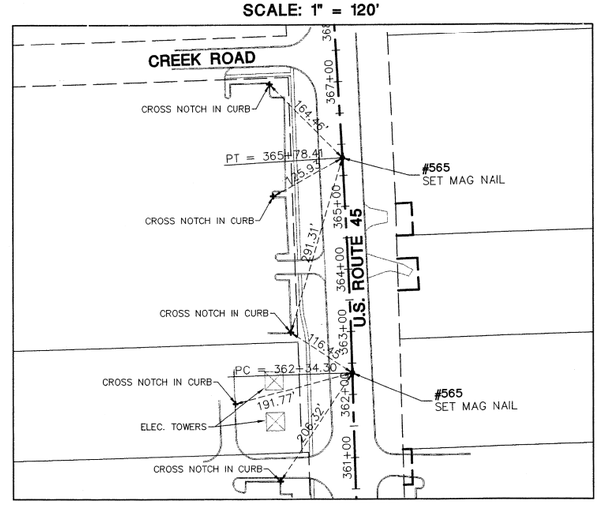

DETAIL OF POINT NO. 567, 568 & 569
SCALE: 1" = 120'

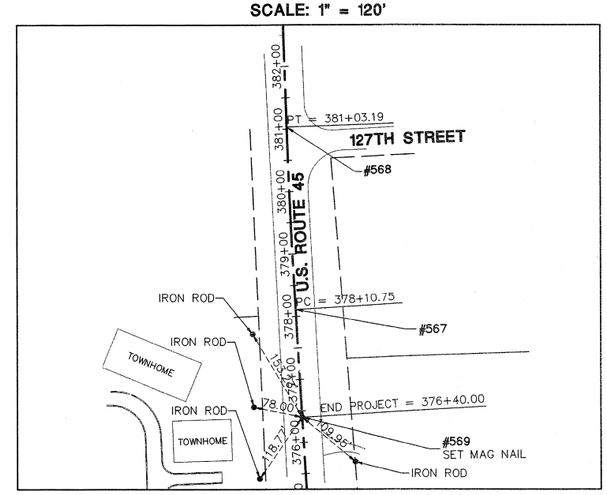

RECEIVED
OCT 24 2011
PLATS & LEGALS

LEGEND

- SECTION CORNER
- QUARTER SECTION CORNER
- SECTION LINE
- QUARTER SECTION LINE
- QUARTER, QUARTER SECTION LINE
- PLATTED LOT LINE
- PROPERTY (DEED) LINE
- CENTERLINE
- EXISTING RIGHT-OF-WAY LINE
- PROPOSED RIGHT-OF-WAY LINE
- PROPOSED EASEMENT
- 129.32' MEASURED DIMENSION
- 129.32'(COMP.) COMPUTED DIMENSION
- ( ) RECORD DATA
- EXISTING BUILDING
- PK NAIL SET
- REPLACED AFTER CONSTRUCTION
- IRON ROD SET
- IRON PIPE OR ROD FOUND
- CUT CROSS FOUND OR SET
- T1 T2 T3 **THESE STAKES REFERENCE FOUND OR SET MONUMENTATION.** WITNESS POINTS SET TO AID IN THE RECOVERY AND ESTABLISHMENT OF THE PROPOSED CENTERLINE OF CONSTRUCTION.
- **STAKING OF PROPOSED RIGHT OF WAY.** MARKER TO MONUMENT THE POSITION SHOWN. IDENTIFIED BY INSCRIPTION DATA AND SURVEYORS REGISTRATION NUMBER.

SEE SHEET 52 FOR COORDINATE VALUES FOR CENTERLINE POINTS, SECTIONS CORNERS AND ROW MONUMENTS

STATE OF ILLINOIS)
) SS
COUNTY OF DuPAGE)

I, WILLIAM W. WRIGHT, DO HEREBY DECLARE THAT I HAVE SURVEYED THE PLAT OF HIGHWAYS SHOWN HEREON IN SECTIONS 33 AND 34, TOWNSHIP 37 NORTH, RANGE 12 EAST OF THE THIRD PRINCIPAL MERIDIAN, AND SECTIONS 3, 4, 9, 10, 15, 16, 21, 22, 27, 28, 33 AND 34, TOWNSHIP 36 NORTH, RANGE 12 EAST OF THE THIRD PRINCIPAL MERIDIAN, ALL IN COOK COUNTY, ILLINOIS; THAT THE SURVEY IS TRUE AND COMPLETE AS SHOWN TO THE BEST OF MY KNOWLEDGE AND BELIEF; THAT THE PLAT CORRECTLY REPRESENTS SAID SURVEY; THAT ALL MONUMENTS FOUND AND ESTABLISHED ARE OF PERMANENT QUALITY AND OCCUPY THE POSITIONS SHOWN THEREON AND THAT THE MONUMENTS ARE SUFFICIENT TO ENABLE THE SURVEY TO BE RETRACED. MADE FOR THE DEPARTMENT OF TRANSPORTATION, STATE OF ILLINOIS.

DATED AT LOMBARD, ILLINOIS THIS 17TH DAY OF OCTOBER A.D., 2011.

ILLINOIS PROFESSIONAL LAND SURVEYOR NO. 3502
LICENSE EXPIRES NOVEMBER 30, 2012

DESIGN FIRM LICENSE NO. 184003350
LICENSE EXPIRES APRIL 30, 2013

WILLIAM W. WRIGHT 3502 PROFESSIONAL LAND SURVEYOR STATE OF ILLINOIS LOMBARD, ILLINOIS

BEARINGS SHOWN HEREON ARE BASED ON ILLINOIS STATE PLANE COORDINATES, EAST ZONE, NORTH AMERICAN DATUM OF 1983. ALL COORDINATE AND DIMENSIONAL VALUES SHOWN HEREON ARE "GROUND" NOT "GRID".

COMBINED SCALE FACTOR (GROUND TO GRID) = 0.999966013

REVISION DATE	DESCRIPTION	INITIALS
10/17/11	ISSUED FINAL SURVEY TO IDOT	WWW

IDOT14 — 090746

SHEET 1 IS A COVER SHEET AND IS NOT RECORDED

Manhard CONSULTING LTD
700 Springer Drive, Lombard, IL 60148 ph:630.691.8300 fx:630.691.8585 manhard.com
Civil Engineers • Surveyors • Water Resource Engineers • Water & Wastewater Engineers
Construction Managers • Environmental Scientists • Landscape Architects • Planners

PLAT OF HIGHWAYS
STATE OF ILLINOIS
DEPARTMENT OF TRANSPORTATION
FAP 330/US ROUTE 45
SECTION: 131st St to 179th St COOK COUNTY
PROJECT: JOB NO. R-90-004-07
CENTERLINE RECOVERY TIE DETAILS

SCALE: 1" = 50' SHEET 55 OF 55

BUREAU OF LAND ACQUISITION
201 WEST CENTER COURT
SCHAUMBURG, ILLINOIS 60196

R.O.W. PLAT	BY	DATE
MADE		
CHECKED		
INKED		
NOTEBOOK NO.		

September 28, 2011 – 10:16 Dwg name: P:\Idot14\Dwg\Surv\Final Drawings\Plat of Highways\55 CL TIE DETAILS.dwg Updated By: bwright

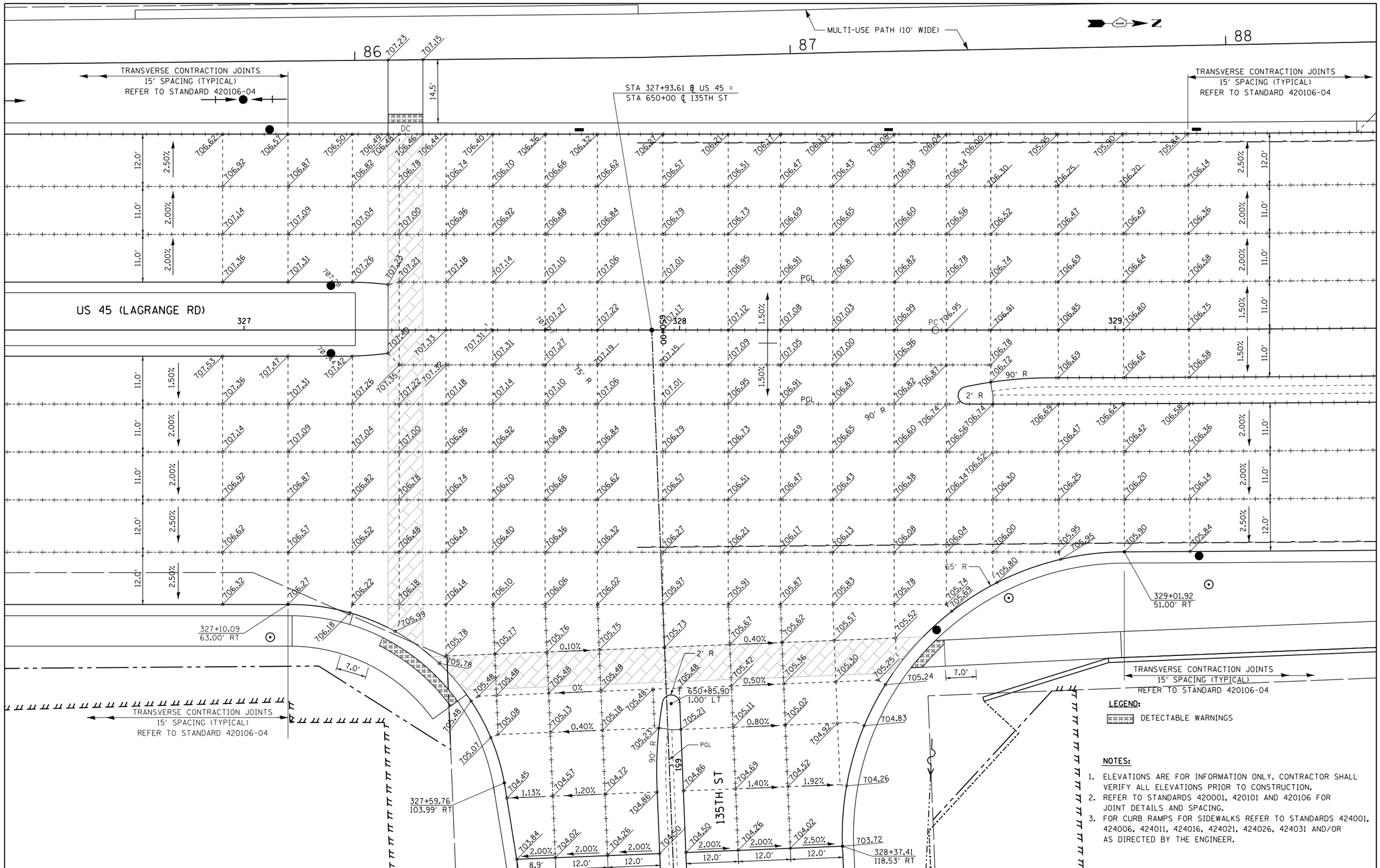

URS
100 S. WACKER DR.
SUITE 500
CHICAGO IL 60606
TEL (312)939-1000
FAX (312)939-4189

FILE NAME = D160M62-PAVEMENT-DETAILS01.dgn	USER NAME = Frank.Stallone	DESIGNED - JTF	REVISED -
		DRAWN - JTF	REVISED -
	PLOT SCALE = 20.000000 ' / in.	CHECKED - MJT	REVISED -
SHT_PLAN	PLOT DATE = 3/13/2013	DATE - 03/13/13	REVISED -

STATE OF ILLINOIS
DEPARTMENT OF TRANSPORTATION

INTERSECTION DETAILS
US 45 (LAGRANGE ROAD) AND 135TH STREET

SCALE: 1"=10' | SHEET 1 OF 4 SHEETS | STA. TO STA.

F.A.P RTE.	SECTION	COUNTY	TOTAL SHEETS	SHEET NO.
330	103R-5	COOK	778	253
	PD-01	CONTRACT NO. 60M62		
		ILLINOIS FED. AID PROJECT		

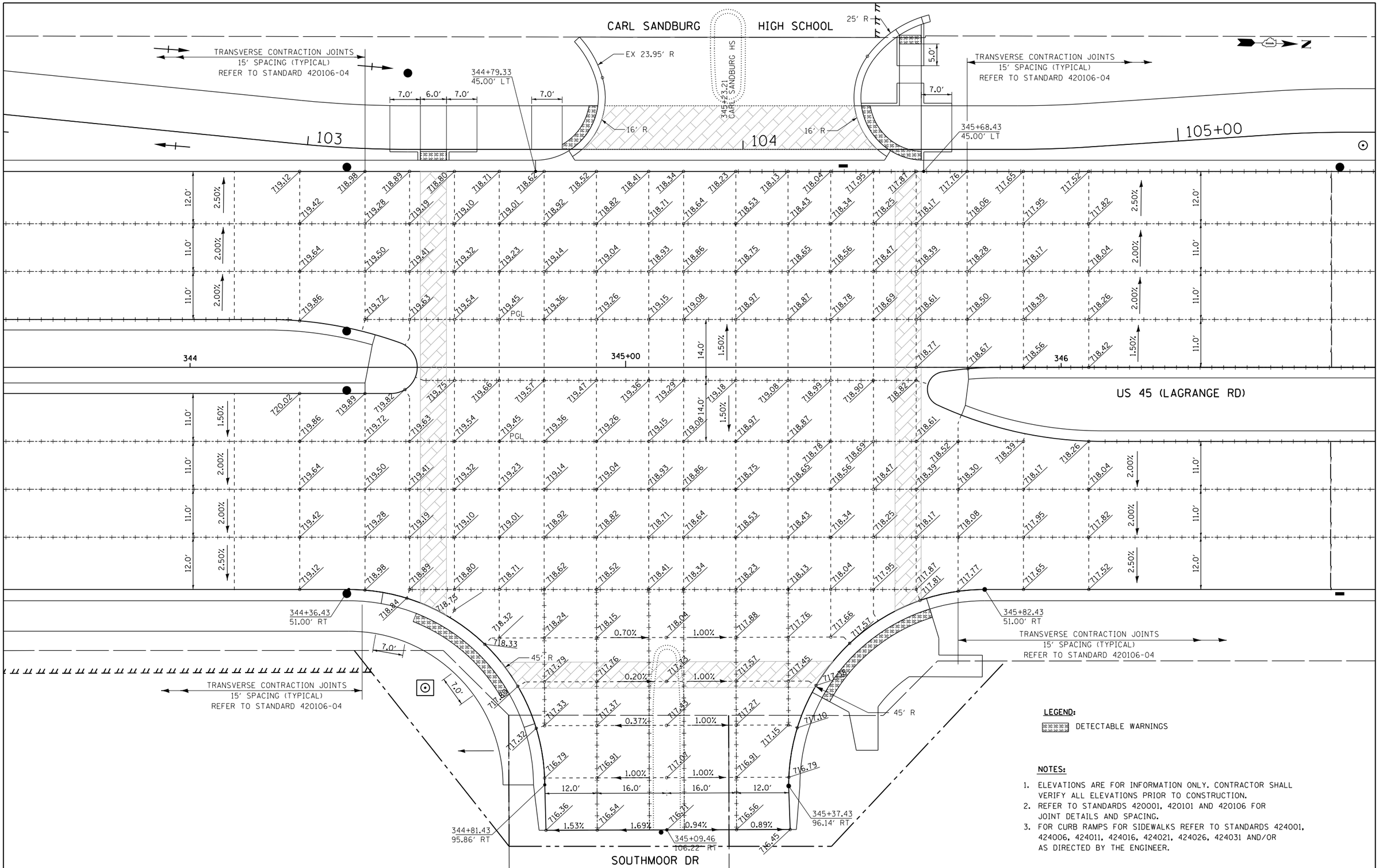

LEGEND:

DETECTABLE WARNINGS

NOTES:

1. ELEVATIONS ARE FOR INFORMATION ONLY. CONTRACTOR SHALL VERIFY ALL ELEVATIONS PRIOR TO CONSTRUCTION.
2. REFER TO STANDARDS 420001, 420101 AND 420106 FOR JOINT DETAILS AND SPACING.
3. FOR CURB RAMPS FOR SIDEWALKS REFER TO STANDARDS 424001, 424006, 424011, 424016, 424021, 424026, 424031 AND/OR AS DIRECTED BY THE ENGINEER.

URS
100 S. WACKER DR.
SUITE 500
CHICAGO IL 60606
TEL (312)939-1000
FAX (312)939-4498

FILE NAME = D160M62-PAVEMENT-DETAILS02.dgn	USER NAME = Frank_Stallone	DESIGNED - JTF	REVISED -
		DRAWN - JTF	REVISED -
	PLOT SCALE = 20.000000 '/ in.	CHECKED - MJT	REVISED -
SHT_PLAN	PLOT DATE = 3/13/2013	DATE - 03/13/13	REVISED -

STATE OF ILLINOIS
DEPARTMENT OF TRANSPORTATION

INTERSECTION DETAILS
US 45 (LAGRANGE ROAD) AND 135TH STREET

SCALE: 1"=10' | SHEET 2 OF 4 SHEETS | STA. | TO STA.

F.A.P RTE.	SECTION	COUNTY	TOTAL SHEETS	SHEET NO.
330	103R-5	COOK	778	254
	PD-02	CONTRACT NO. 60M62		
		ILLINOIS FED. AID PROJECT		

LEGEND:

DETECTABLE WARNINGS

NOTES:

1. ELEVATIONS ARE FOR INFORMATION ONLY. CONTRACTOR SHALL VERIFY ALL ELEVATIONS PRIOR TO CONSTRUCTION.
2. REFER TO STANDARDS 420001, 420101, 420106 FOR JOINT DETAILS AND SPACING.
3. FOR CURB RAMPS FOR SIDEWALKS REFER TO STANDARDS 424001, 424006, 424011, 424016, 424021, 424026, 424031 AND/OR AS DIRECTED BY THE ENGINEER.

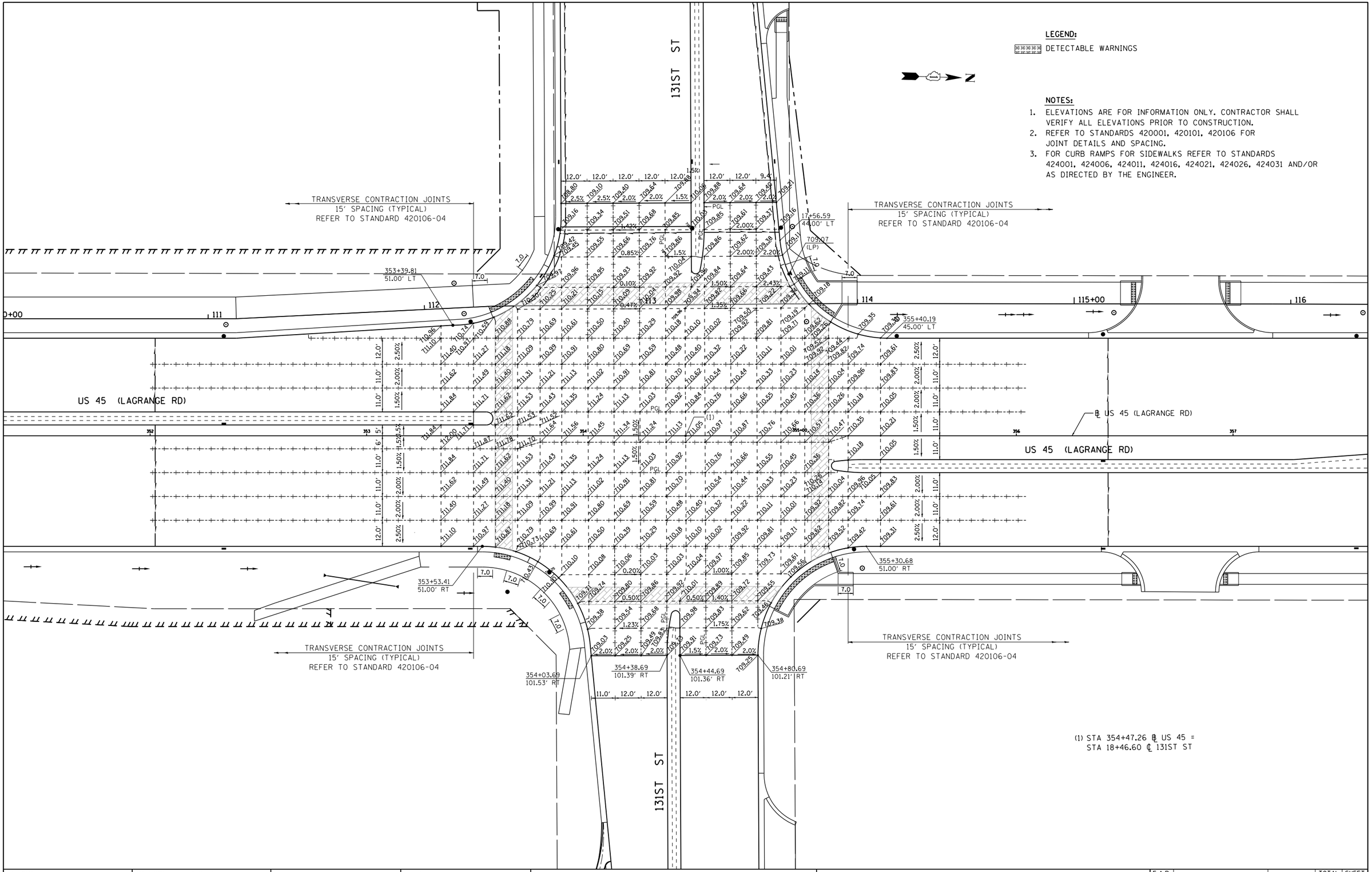

(1) STA 354+47.26 ℄ US 45 =
STA 18+46.60 ℄ 131ST ST

URS
100 S. WACKER DR.
SUITE 500
CHICAGO IL 60606
TEL (312)-939-1000
FAX (312)-939-4498

FILE NAME = D160M62-PAVEMENT-DETAILS03.dgn	USER NAME = Frank_Stallone	DESIGNED - JTF	REVISED -
		DRAWN - JTF	REVISED -
	PLOT SCALE = 40.000000 ' / in.	CHECKED - MJT	REVISED -
SHT_PLAN	PLOT DATE = 3/13/2013	DATE - 03/13/13	REVISED -

STATE OF ILLINOIS
DEPARTMENT OF TRANSPORTATION

INTERSECTION DETAILS
US 45 (LAGRANGE ROAD) AND 131ST STREET

SCALE: 1"=20' | SHEET 3 OF 4 SHEETS | STA. TO STA.

F.A.P RTE.	SECTION	COUNTY	TOTAL SHEETS	SHEET NO.
330	103R-5	COOK	778	255
	PD-03	CONTRACT NO. 60M62		
		ILLINOIS FED. AID PROJECT		

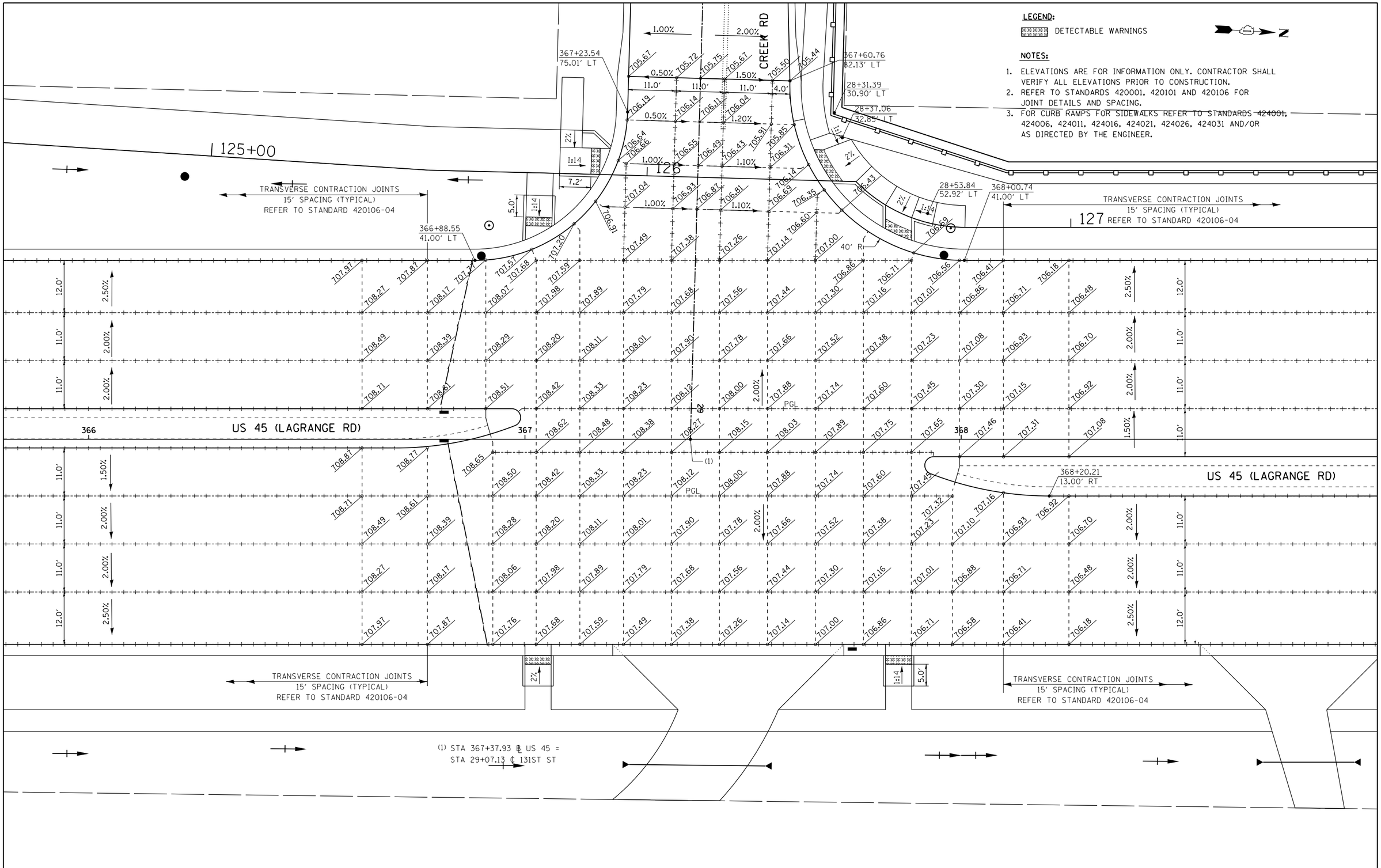

URS
100 S. WACKER DR.
SUITE 500
CHICAGO, IL 60606
TEL (312)939-1000
FAX (312)939-498

FILE NAME = D160M62-PAVEMENT-DETAILS04.dgn	USER NAME = Frank.Stallone	DESIGNED - JTF	REVISED -
		DRAWN - JTF	REVISED -
	PLOT SCALE = 20.000000 ' / in.	CHECKED - MJT	REVISED -
SHT_PLAN	PLOT DATE = 3/13/2013	DATE - 03/13/13	REVISED -

STATE OF ILLINOIS
DEPARTMENT OF TRANSPORTATION

INTERSECTION DETAILS
US 45 (LAGRANGE ROAD) AND CREEK RD

SCALE: 1"=10' | SHEET 4 OF 4 SHEETS | STA. TO STA.

F.A.P RTE.	SECTION	COUNTY	TOTAL SHEETS	SHEET NO.
330	103R-5	COOK	778	256
	PD-04	CONTRACT NO. 60M62		
	ILLINOIS FED. AID PROJECT			

LANDSCAPING LEGEND

- SEEDING CLASS 2A
  TOPSOIL, 6"/WEED CONTROL
- SEEDING CLASS 4
  TOPSOIL, 6"/WEED CONTROL
- SEEDING CLASS 4B (MOD)
  TOPSOIL, 6"/WEED CONTROL
- SODDING, SALT TOLERANT
  TOPSOIL, 24" (MEDIAN ONLY)/WEED CONTROL
  TOPSOIL 6" (EXCEPT MEDIAN)/WEED CONTROL
- EROSION CONTROL BLANKET
- SELECTIVE MOWING STAKE WITH WETLAND OR PRAIRIE PLANT SIGN

LANDSCAPING NOTES:

1. PLAN VIEW BREAKS BETWEEN SEEDING TYPES ARE APPROXIMATE. SEE PROPOSED CROSS SECTIONS FOR DETAILS.
2. MULCH METHOD 2 SHALL BE USED AT ALL SEEDING LOCATIONS NOT PROTECTED BY EROSION CONTROL BLANKET. HATCHING HAS BEEN OMITTED FOR CLARITY.
3. WEED CONTROL, NON-SELECTIVE AND NON-RESIDUAL SHOULD BE USED AT ALL SEEDING CLASS 4 AREAS ADJACENT TO WETLAND AND FOREST PRESERVE.
4. WEED CONTROL, BROADLEAF, SHOULD BE USED IN TURF AREAS INCLUDING ALL SEEDING 2A AND SODDING.
5. WEED CONTROL, TEASEL SHOULD BE USED ALONG RIGHT-OF-WAY WHERE PRESENT.

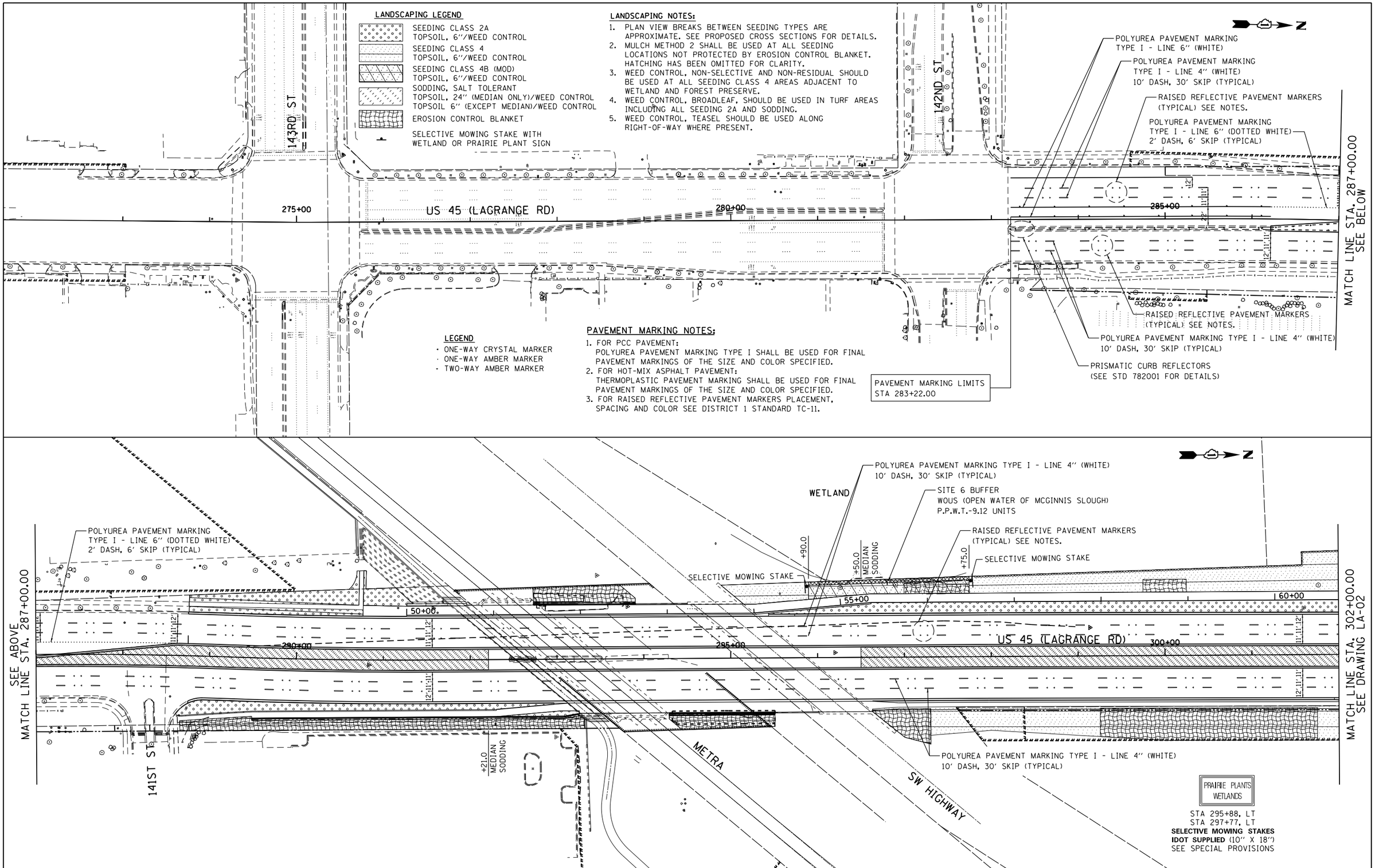

LEGEND

- ONE-WAY CRYSTAL MARKER
- ONE-WAY AMBER MARKER
- TWO-WAY AMBER MARKER

PAVEMENT MARKING NOTES:

1. FOR PCC PAVEMENT:
   POLYUREA PAVEMENT MARKING TYPE I SHALL BE USED FOR FINAL PAVEMENT MARKINGS OF THE SIZE AND COLOR SPECIFIED.
2. FOR HOT-MIX ASPHALT PAVEMENT:
   THERMOPLASTIC PAVEMENT MARKING SHALL BE USED FOR FINAL PAVEMENT MARKINGS OF THE SIZE AND COLOR SPECIFIED.
3. FOR RAISED REFLECTIVE PAVEMENT MARKERS PLACEMENT, SPACING AND COLOR SEE DISTRICT 1 STANDARD TC-11.

PRAIRIE PLANTS
WETLANDS

STA 295+88, LT
STA 297+77, LT
SELECTIVE MOWING STAKES
IDOT SUPPLIED (10" X 18")
SEE SPECIAL PROVISIONS

URS
100 S. WACKER DR.
SUITE 500
CHICAGO IL 60606
TEL (312)939-1000
FAX (312)939-9498

FILE NAME = D160M62-SHT-LNDSCP-PMK01.dgn	USER NAME = Frank.Stallone	DESIGNED - JTF	REVISED -
		DRAWN - JTF	REVISED -
	PLOT SCALE = 100.000000 ' / in.	CHECKED - MJT	REVISED -
SHT_DOUBLE PLAN	PLOT DATE = 3/13/2013	DATE - 03/13/13	REVISED -

STATE OF ILLINOIS
DEPARTMENT OF TRANSPORTATION

LANDSCAPING, PAVEMENT MARKING AND SIGNING PLAN
US 45 (LAGRANGE ROAD)

SCALE: 1"=50' | SHEET 1 OF 7 SHEETS | STA. BEGIN TO STA. 302+00.00

F.A.P RTE.	SECTION	COUNTY	TOTAL SHEETS	SHEET NO.
330	103R-5	COOK	778	257
	LA-01	CONTRACT NO. 60M62		
		ILLINOIS FED. AID PROJECT		

LEGEND
- ONE-WAY CRYSTAL MARKER
- ONE-WAY AMBER MARKER
- TWO-WAY AMBER MARKER

PAVEMENT MARKING NOTES:
1. FOR PCC PAVEMENT:
   POLYUREA PAVEMENT MARKING TYPE I SHALL BE USED FOR FINAL PAVEMENT MARKINGS OF THE SIZE AND COLOR SPECIFIED.
2. FOR HOT-MIX ASPHALT PAVEMENT:
   THERMOPLASTIC PAVEMENT MARKING SHALL BE USED FOR FINAL PAVEMENT MARKINGS OF THE SIZE AND COLOR SPECIFIED.
3. FOR RAISED REFLECTIVE PAVEMENT MARKERS PLACEMENT, SPACING AND COLOR SEE DISTRICT 1 STANDARD TC-11.

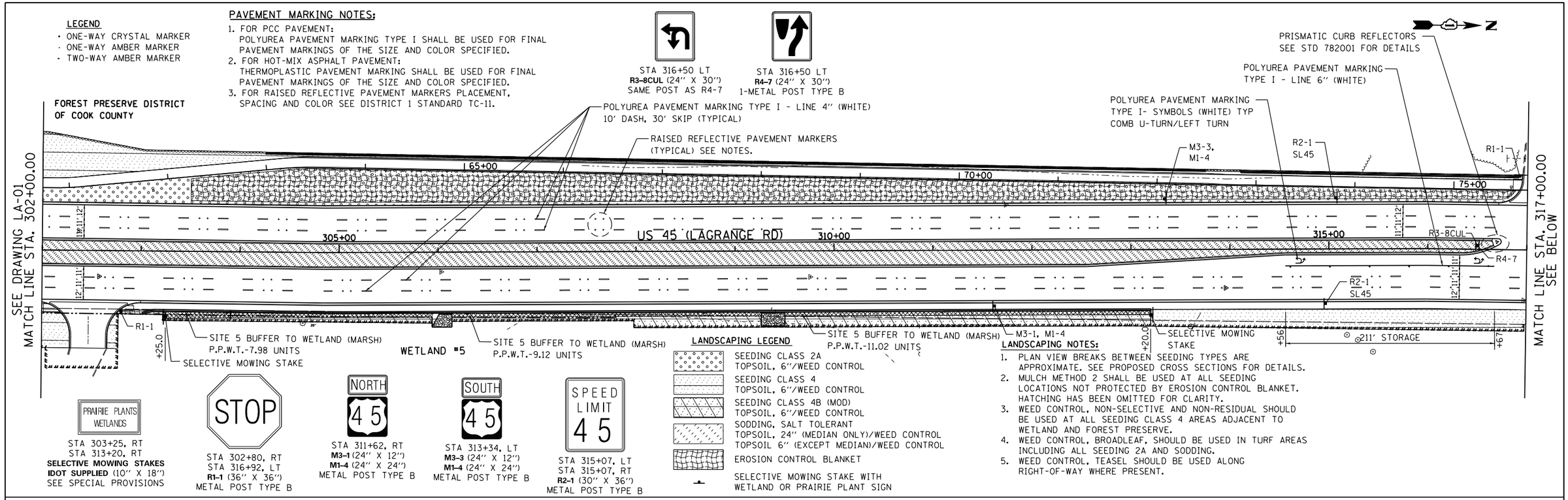

LANDSCAPING NOTES:
1. PLAN VIEW BREAKS BETWEEN SEEDING TYPES ARE APPROXIMATE. SEE PROPOSED CROSS SECTIONS FOR DETAILS.
2. MULCH METHOD 2 SHALL BE USED AT ALL SEEDING LOCATIONS NOT PROTECTED BY EROSION CONTROL BLANKET. HATCHING HAS BEEN OMITTED FOR CLARITY.
3. WEED CONTROL, NON-SELECTIVE AND NON-RESIDUAL SHOULD BE USED AT ALL SEEDING CLASS 4 AREAS ADJACENT TO WETLAND AND FOREST PRESERVE.
4. WEED CONTROL, BROADLEAF, SHOULD BE USED IN TURF AREAS INCLUDING ALL SEEDING 2A AND SODDING.
5. WEED CONTROL, TEASEL SHOULD BE USED ALONG RIGHT-OF-WAY WHERE PRESENT.

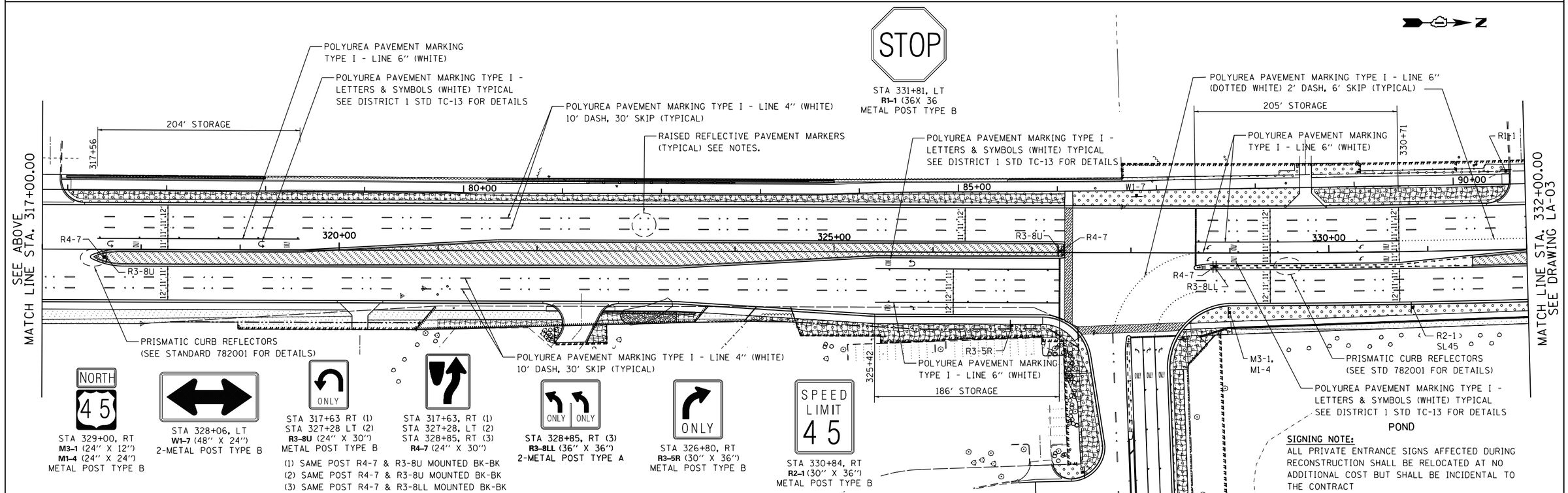

SIGNING NOTE:
ALL PRIVATE ENTRANCE SIGNS AFFECTED DURING RECONSTRUCTION SHALL BE RELOCATED AT NO ADDITIONAL COST BUT SHALL BE INCIDENTAL TO THE CONTRACT

URS
100 S. WACKER DR.
SUITE 500
CHICAGO IL 60606
TEL (312)-939-0000
FAX (312)-939-4198

FILE NAME = D160M62-SHT-LNDSCP-PMK02.dgn	USER NAME = Frank.Stallone	DESIGNED - JTF	REVISED -
		DRAWN - JTF	REVISED -
	PLOT SCALE = 100.000000 ' / in.	CHECKED - MJT	REVISED -
SHT_DOUBLE PLAN	PLOT DATE = 3/13/2013	DATE - 03/13/13	REVISED -

STATE OF ILLINOIS
DEPARTMENT OF TRANSPORTATION

LANDSCAPING, PAVEMENT MARKING AND SIGNING PLAN
US 45 (LAGRANGE ROAD)

SCALE: 1"=50' | SHEET 2 OF 7 SHEETS | STA. 302+00.00 TO STA. 332+00.00

F.A.P RTE.	SECTION	COUNTY	TOTAL SHEETS	SHEET NO.
330	103R-5	COOK	778	258
	LA-02	CONTRACT NO. 60M62		
		ILLINOIS FED. AID PROJECT		

LEGEND

- ONE-WAY CRYSTAL MARKER
- ONE-WAY AMBER MARKER
- TWO-WAY AMBER MARKER

PAVEMENT MARKING NOTES:

1. FOR PCC PAVEMENT: POLYUREA PAVEMENT MARKING TYPE I SHALL BE USED FOR FINAL PAVEMENT MARKINGS OF THE SIZE AND COLOR SPECIFIED.
2. FOR HOT-MIX ASPHALT PAVEMENT: THERMOPLASTIC PAVEMENT MARKING SHALL BE USED FOR FINAL PAVEMENT MARKINGS OF THE SIZE AND COLOR SPECIFIED.
3. FOR RAISED REFLECTIVE PAVEMENT MARKERS PLACEMENT, SPACING AND COLOR SEE DISTRICT 1 STANDARD TC-11.

SIGNING NOTE:

ALL PRIVATE ENTRANCE SIGNS AFFECTED DURING RECONSTRUCTION SHALL BE RELOCATED AT NO ADDITIONAL COST BUT SHALL BE INCIDENTAL TO THE CONTRACT

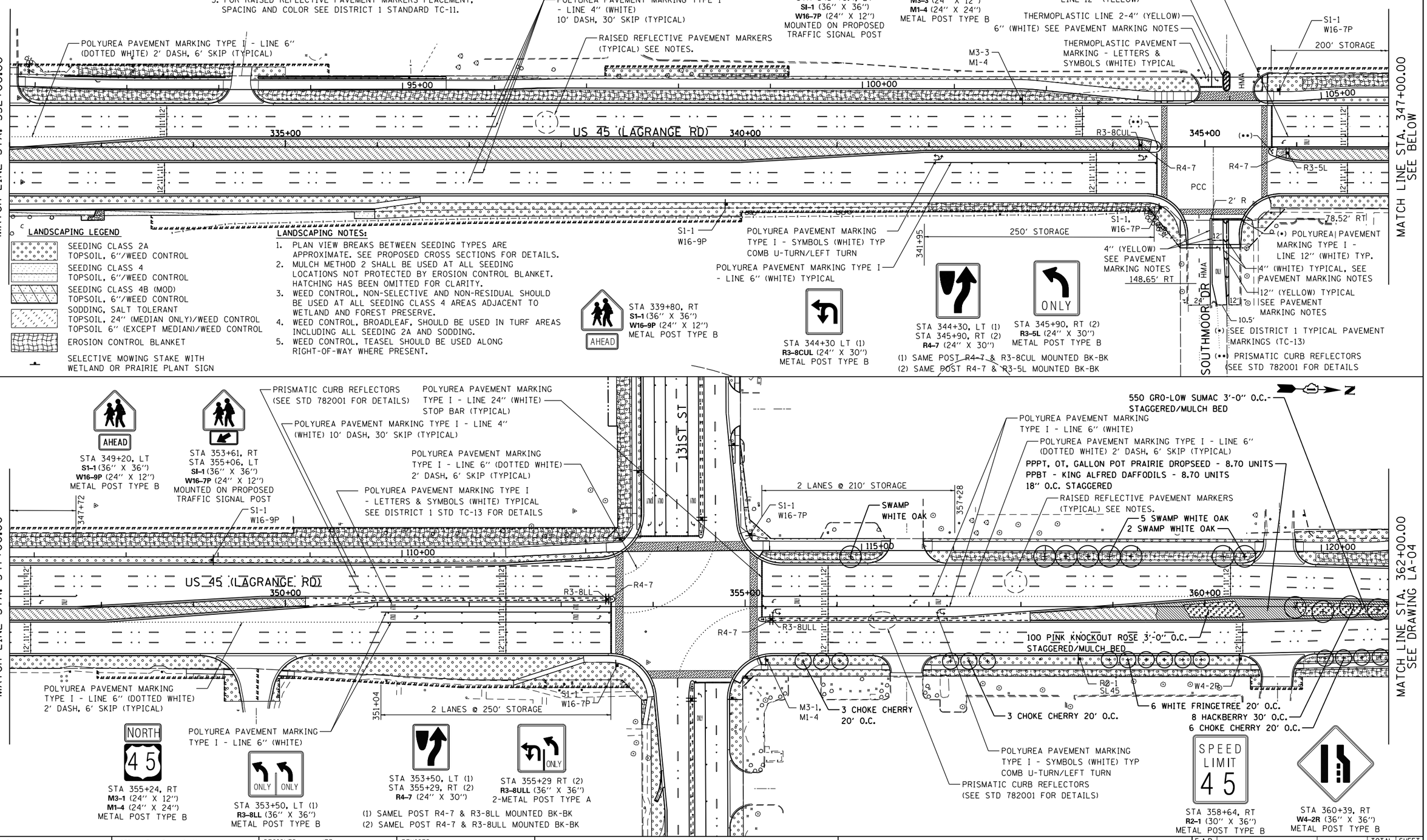

LANDSCAPING LEGEND

- SEEDING CLASS 2A
  TOPSOIL, 6"/WEED CONTROL
- SEEDING CLASS 4
  TOPSOIL, 6"/WEED CONTROL
- SEEDING CLASS 4B (MOD)
  TOPSOIL, 6"/WEED CONTROL
- SODDING, SALT TOLERANT
  TOPSOIL, 24" (MEDIAN ONLY)/WEED CONTROL
  TOPSOIL 6" (EXCEPT MEDIAN)/WEED CONTROL
- EROSION CONTROL BLANKET
- SELECTIVE MOWING STAKE WITH WETLAND OR PRAIRIE PLANT SIGN

LANDSCAPING NOTES:

1. PLAN VIEW BREAKS BETWEEN SEEDING TYPES ARE APPROXIMATE. SEE PROPOSED CROSS SECTIONS FOR DETAILS.
2. MULCH METHOD 2 SHALL BE USED AT ALL SEEDING LOCATIONS NOT PROTECTED BY EROSION CONTROL BLANKET. HATCHING HAS BEEN OMITTED FOR CLARITY.
3. WEED CONTROL, NON-SELECTIVE AND NON-RESIDUAL SHOULD BE USED AT ALL SEEDING CLASS 4 AREAS ADJACENT TO WETLAND AND FOREST PRESERVE.
4. WEED CONTROL, BROADLEAF, SHOULD BE USED IN TURF AREAS INCLUDING ALL SEEDING 2A AND SODDING.
5. WEED CONTROL, TEASEL SHOULD BE USED ALONG RIGHT-OF-WAY WHERE PRESENT.

URS
100 S. WACKER DR.
SUITE 500
CHICAGO, IL 60606
TEL (312)-939-1000
FAX (312)-939-4498

FILE NAME = D160M62-SHT-LNDSCP-PMK03.dgn	USER NAME = Frank_Stallone	DESIGNED - JTF	REVISED -
		DRAWN - JTF	REVISED -
	PLOT SCALE = 100.000000 ' / in.	CHECKED - MJT	REVISED -
SHT_DOUBLE PLAN	PLOT DATE = 3/13/2013	DATE - 03/13/13	REVISED -

STATE OF ILLINOIS
DEPARTMENT OF TRANSPORTATION

LANDSCAPING, PAVEMENT MARKING AND SIGNING PLAN
US 45 (LAGRANGE ROAD)

SCALE: 1"=50' | SHEET 3 OF 7 SHEETS | STA. 332+00.00 TO STA. 362+00.00

F.A.P RTE.	SECTION	COUNTY	TOTAL SHEETS	SHEET NO.
330	103R-5	COOK	778	259
	LA-03	CONTRACT NO. 60M62		
		ILLINOIS FED. AID PROJECT		

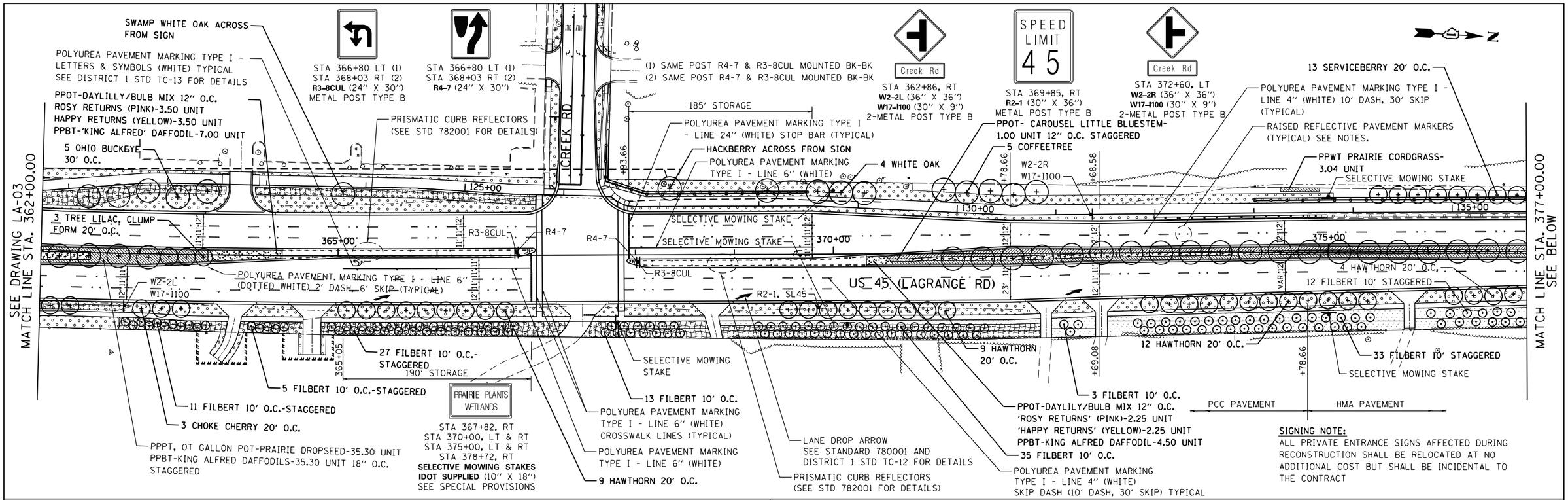

SIGNING NOTE:
ALL PRIVATE ENTRANCE SIGNS AFFECTED DURING RECONSTRUCTION SHALL BE RELOCATED AT NO ADDITIONAL COST BUT SHALL BE INCIDENTAL TO THE CONTRACT

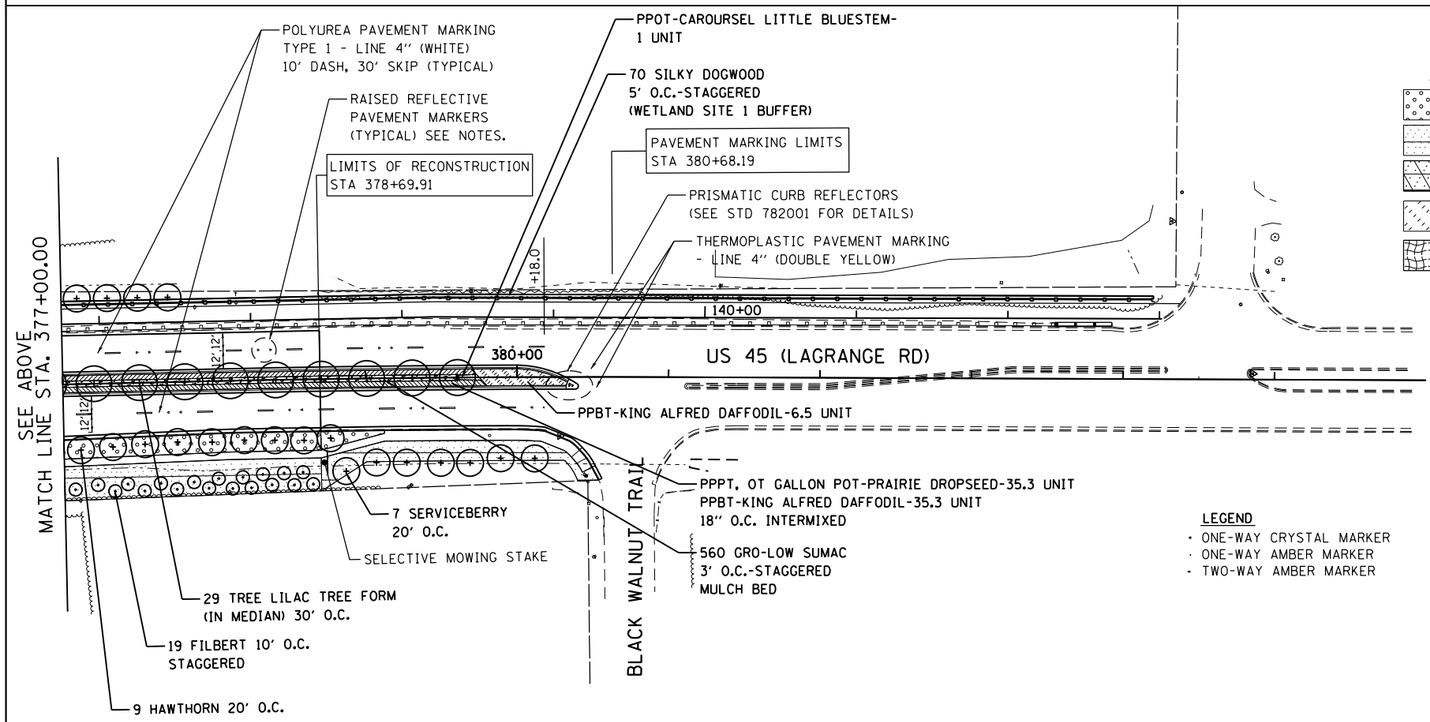

LANDSCAPING LEGEND

- SEEDING CLASS 2A
  TOPSOIL, 6"/WEED CONTROL
- SEEDING CLASS 4
  TOPSOIL, 6"/WEED CONTROL
- SEEDING CLASS 4B (MOD)
  TOPSOIL, 6"/WEED CONTROL
- SODDING, SALT TOLERANT
  TOPSOIL, 24" (MEDIAN ONLY)/WEED CONTROL
  TOPSOIL 6" (EXCEPT MEDIAN)/WEED CONTROL
- EROSION CONTROL BLANKET
- SELECTIVE MOWING STAKE WITH WETLAND OR PRAIRIE PLANT SIGN

LANDSCAPING NOTES:

1. PLAN VIEW BREAKS BETWEEN SEEDING TYPES ARE APPROXIMATE. SEE PROPOSED CROSS SECTIONS FOR DETAILS.
2. MULCH METHOD 2 SHALL BE USED AT ALL SEEDING LOCATIONS NOT PROTECTED BY EROSION CONTROL BLANKET. HATCHING HAS BEEN OMITTED FOR CLARITY.
3. WEED CONTROL, NON-SELECTIVE AND NON-RESIDUAL SHOULD BE USED AT ALL SEEDING CLASS 4 AREAS ADJACENT TO WETLAND AND FOREST PRESERVE.
4. WEED CONTROL, BROADLEAF, SHOULD BE USED IN TURF AREAS INCLUDING ALL SEEDING 2A AND SODDING.
5. WEED CONTROL, TEASEL SHOULD BE USED ALONG RIGHT-OF-WAY WHERE PRESENT.

LEGEND

- ONE-WAY CRYSTAL MARKER
- ONE-WAY AMBER MARKER
- TWO-WAY AMBER MARKER

PAVEMENT MARKING NOTES:

1. FOR PCC PAVEMENT:
   POLYUREA PAVEMENT MARKING TYPE I SHALL BE USED FOR FINAL PAVEMENT MARKINGS OF THE SIZE AND COLOR SPECIFIED.
2. FOR HOT-MIX ASPHALT PAVEMENT:
   THERMOPLASTIC PAVEMENT MARKING SHALL BE USED FOR FINAL PAVEMENT MARKINGS OF THE SIZE AND COLOR SPECIFIED.
3. FOR RAISED REFLECTIVE PAVEMENT MARKERS PLACEMENT, SPACING AND COLOR SEE DISTRICT 1 STANDARD TC-11.

URS
100 S. WACKER DR.
SUITE 500
CHICAGO, IL 60606
TEL (312)-939-1000
FAX (312)-939-4498

FILE NAME = D160M62-SHT-LNDSCP-PMK04.dgn	USER NAME = Frank_Stallone	DESIGNED - JTF	REVISED -
		DRAWN - JTF	REVISED -
	PLOT SCALE = 100.000000 ' / in.	CHECKED - MJT	REVISED -
SHT_DOUBLE PLAN	PLOT DATE = 3/13/2013	DATE - 03/13/13	REVISED -

STATE OF ILLINOIS
DEPARTMENT OF TRANSPORTATION

LANDSCAPING, PAVEMENT MARKING AND SIGNING PLAN
US 45 (LAGRANGE ROAD)

SCALE: 1"=50' | SHEET 4 OF 7 SHEETS | STA. 362+00.00 TO STA. END

F.A.P RTE.	SECTION	COUNTY	TOTAL SHEETS	SHEET NO.
330	103R-5	COOK	778	260
	LA-04	CONTRACT NO. 60M62		
		ILLINOIS FED. AID PROJECT		

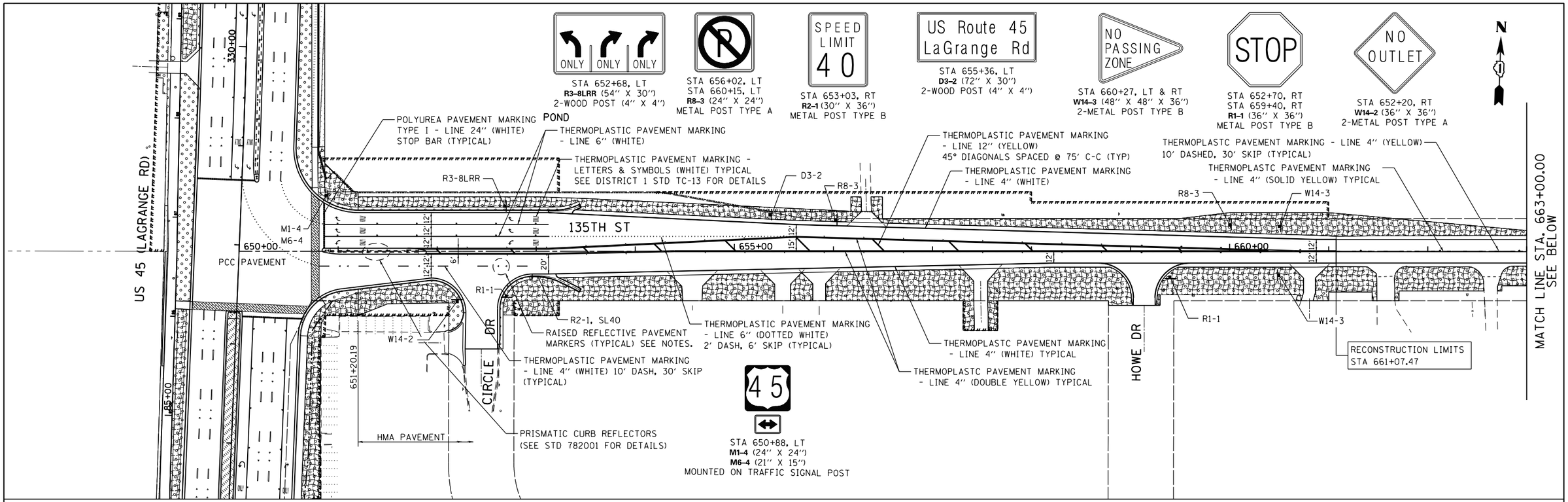

LANDSCAPING LEGEND

- SEEDING CLASS 2A
  TOPSOIL, 6"/WEED CONTROL
- SEEDING CLASS 4
  TOPSOIL, 6"/WEED CONTROL
- SEEDING CLASS 4B (MOD)
  TOPSOIL, 6"/WEED CONTROL
- SODDING, SALT TOLERANT
  TOPSOIL, 24" (MEDIAN ONLY)/WEED CONTROL
  TOPSOIL 6" (EXCEPT MEDIAN)/WEED CONTROL
- EROSION CONTROL BLANKET
- SELECTIVE MOWING STAKE WITH WETLAND OR PRAIRIE PLANT SIGN

LANDSCAPING NOTES:

1. PLAN VIEW BREAKS BETWEEN SEEDING TYPES ARE APPROXIMATE. SEE PROPOSED CROSS SECTIONS FOR DETAILS.
2. MULCH METHOD 2 SHALL BE USED AT ALL SEEDING LOCATIONS NOT PROTECTED BY EROSION CONTROL BLANKET. HATCHING HAS BEEN OMITTED FOR CLARITY.
3. WEED CONTROL, NON-SELECTIVE AND NON-RESIDUAL SHOULD BE USED AT ALL SEEDING CLASS 4 AREAS ADJACENT TO WETLAND AND FOREST PRESERVE.
4. WEED CONTROL, BROADLEAF, SHOULD BE USED IN TURF AREAS INCLUDING ALL SEEDING 2A AND SODDING.
5. WEED CONTROL, TEASEL SHOULD BE USED ALONG RIGHT-OF-WAY WHERE PRESENT.

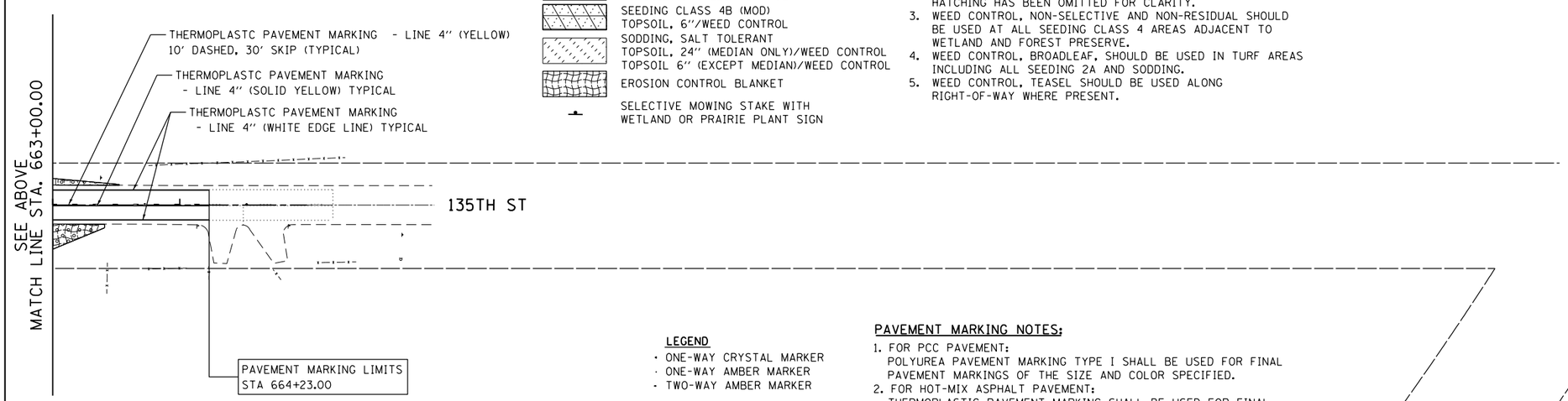

LEGEND

- ONE-WAY CRYSTAL MARKER
- ONE-WAY AMBER MARKER
- TWO-WAY AMBER MARKER

PAVEMENT MARKING NOTES:

1. FOR PCC PAVEMENT:
   POLYUREA PAVEMENT MARKING TYPE I SHALL BE USED FOR FINAL PAVEMENT MARKINGS OF THE SIZE AND COLOR SPECIFIED.
2. FOR HOT-MIX ASPHALT PAVEMENT:
   THERMOPLASTIC PAVEMENT MARKING SHALL BE USED FOR FINAL PAVEMENT MARKINGS OF THE SIZE AND COLOR SPECIFIED.
3. FOR RAISED REFLECTIVE PAVEMENT MARKERS PLACEMENT, SPACING AND COLOR SEE DISTRICT 1 STANDARD TC-11.

SIGNING NOTE:

ALL PRIVATE ENTRANCE SIGNS AFFECTED DURING RECONSTRUCTION SHALL BE RELOCATED AT NO ADDITIONAL COST BUT SHALL BE INCIDENTAL TO THE CONTRACT

URS
100 S. WACKER DR.
SUITE 500
CHICAGO IL 60606
TEL (312)-939-0000
FAX (312)-939-4198

FILE NAME = D160M62-SHT-LNDSCP-PMK05.dgn	USER NAME = Frank.Stallone	DESIGNED - JTF	REVISED -
		DRAWN - JTF	REVISED -
	PLOT SCALE = 100.000000 '/ in.	CHECKED - MJT	REVISED -
SHT.DOUBLE PLAN	PLOT DATE = 3/13/2013	DATE - 03/13/13	REVISED -

STATE OF ILLINOIS
DEPARTMENT OF TRANSPORTATION

LANDSCAPING, PAVEMENT MARKING AND SIGNING PLAN
135TH STREET

SCALE: 1"=50' | SHEET 5 OF 7 SHEETS | STA. BEGIN TO STA. END

F.A.P RTE.	SECTION	COUNTY	TOTAL SHEETS	SHEET NO.
330	103R-5	COOK	778	261
	LA-05	CONTRACT NO. 60M62		
	ILLINOIS FED. AID PROJECT			

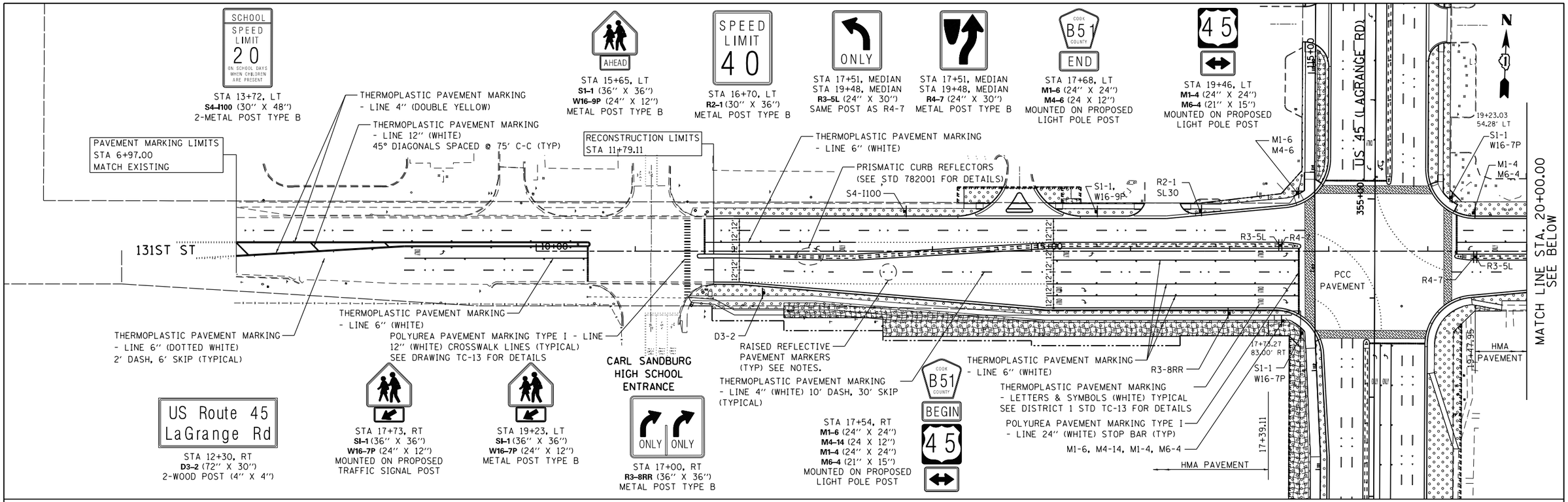

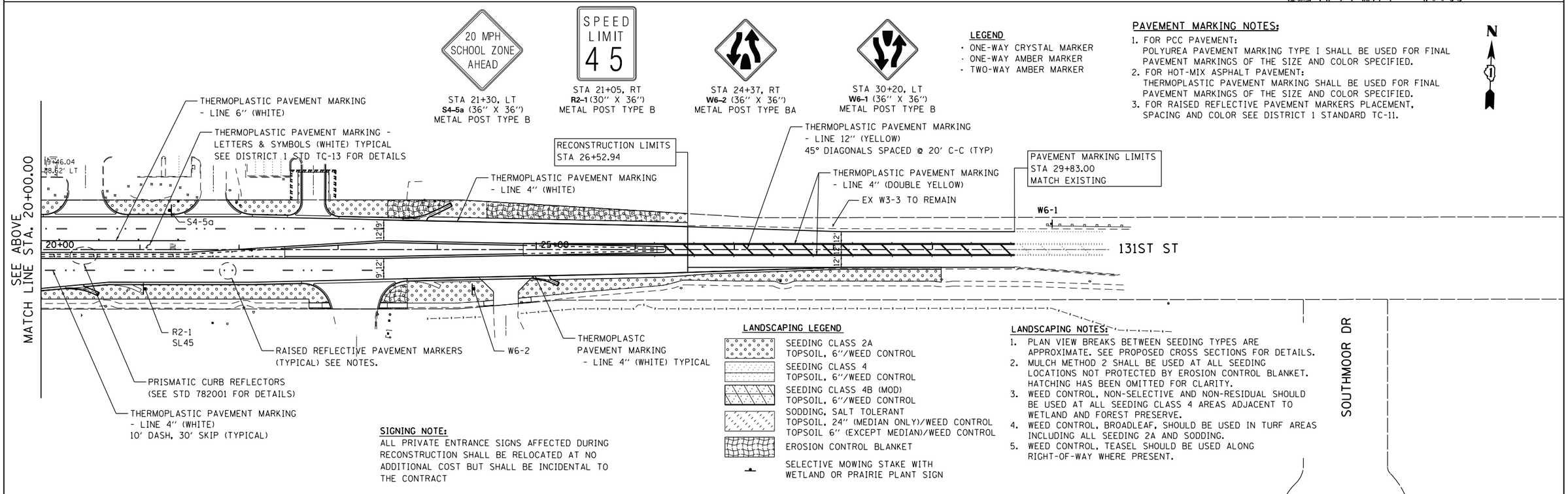

SIGNING NOTE:
ALL PRIVATE ENTRANCE SIGNS AFFECTED DURING RECONSTRUCTION SHALL BE RELOCATED AT NO ADDITIONAL COST BUT SHALL BE INCIDENTAL TO THE CONTRACT

LANDSCAPING LEGEND

- SEEDING CLASS 2A
  TOPSOIL, 6"/WEED CONTROL
- SEEDING CLASS 4
  TOPSOIL, 6"/WEED CONTROL
- SEEDING CLASS 4B (MOD)
  TOPSOIL, 6"/WEED CONTROL
- SODDING, SALT TOLERANT
  TOPSOIL, 24" (MEDIAN ONLY)/WEED CONTROL
  TOPSOIL 6" (EXCEPT MEDIAN)/WEED CONTROL
- EROSION CONTROL BLANKET
- SELECTIVE MOWING STAKE WITH WETLAND OR PRAIRIE PLANT SIGN

LANDSCAPING NOTES:

1. PLAN VIEW BREAKS BETWEEN SEEDING TYPES ARE APPROXIMATE. SEE PROPOSED CROSS SECTIONS FOR DETAILS.
2. MULCH METHOD 2 SHALL BE USED AT ALL SEEDING LOCATIONS NOT PROTECTED BY EROSION CONTROL BLANKET. HATCHING HAS BEEN OMITTED FOR CLARITY.
3. WEED CONTROL, NON-SELECTIVE AND NON-RESIDUAL SHOULD BE USED AT ALL SEEDING CLASS 4 AREAS ADJACENT TO WETLAND AND FOREST PRESERVE.
4. WEED CONTROL, BROADLEAF, SHOULD BE USED IN TURF AREAS INCLUDING ALL SEEDING 2A AND SODDING.
5. WEED CONTROL, TEASEL SHOULD BE USED ALONG RIGHT-OF-WAY WHERE PRESENT.

URS
100 S. WACKER DR.
SUITE 500
CHICAGO IL 60606
TEL (312)-939-0000
FAX (312)-939-4198

FILE NAME = D160M62-SHT-LNDSCP-PMK06.dgn	USER NAME = Frank.Stallone	DESIGNED - JTF	REVISED -
		DRAWN - JTF	REVISED -
	PLOT SCALE = 100.000000 ' / in.	CHECKED - MJT	REVISED -
SHT.DOUBLE PLAN	PLOT DATE = 3/13/2013	DATE - 03/13/13	REVISED -

STATE OF ILLINOIS
DEPARTMENT OF TRANSPORTATION

LANDSCAPING, PAVEMENT MARKING AND SIGNING PLAN
131ST STREET

SCALE: 1"=50' | SHEET 6 OF 7 SHEETS | STA. BEGIN TO STA. END

F.A.P RTE.	SECTION	COUNTY	TOTAL SHEETS	SHEET NO.
330	103R-5	COOK	778	262
	LA-06	CONTRACT NO. 60M62		
	ILLINOIS FED. AID PROJECT			

LANDSCAPING LEGEND

- SEEDING CLASS 2A
  TOPSOIL, 6"/WEED CONTROL
- SEEDING CLASS 4
  TOPSOIL, 6"/WEED CONTROL
- SEEDING CLASS 4B (MOD)
  TOPSOIL, 6"/WEED CONTROL
- SODDING, SALT TOLERANT
  TOPSOIL, 24" (MEDIAN ONLY)/WEED CONTROL
  TOPSOIL 6" (EXCEPT MEDIAN)/WEED CONTROL
- EROSION CONTROL BLANKET
- SELECTIVE MOWING STAKE WITH WETLAND OR PRAIRIE PLANT SIGN

LANDSCAPING NOTES:

1. PLAN VIEW BREAKS BETWEEN SEEDING TYPES ARE APPROXIMATE. SEE PROPOSED CROSS SECTIONS FOR DETAILS.
2. MULCH METHOD 2 SHALL BE USED AT ALL SEEDING LOCATIONS NOT PROTECTED BY EROSION CONTROL BLANKET. HATCHING HAS BEEN OMITTED FOR CLARITY.
3. WEED CONTROL, NON-SELECTIVE AND NON-RESIDUAL SHOULD BE USED AT ALL SEEDING CLASS 4 AREAS ADJACENT TO WETLAND AND FOREST PRESERVE.
4. WEED CONTROL, BROADLEAF, SHOULD BE USED IN TURF AREAS INCLUDING ALL SEEDING 2A AND SODDING.
5. WEED CONTROL, TEASEL SHOULD BE USED ALONG RIGHT-OF-WAY WHERE PRESENT.

PRIVATE DRIVE AHEAD

STA 27+70, RT
W-PDA (30" X 30")
METAL POST TYPE B

SIGNING NOTE:

ALL PRIVATE ENTRANCE SIGNS AFFECTED DURING RECONSTRUCTION SHALL BE RELOCATED AT NO ADDITIONAL COST BUT SHALL BE INCIDENTAL TO THE CONTRACT

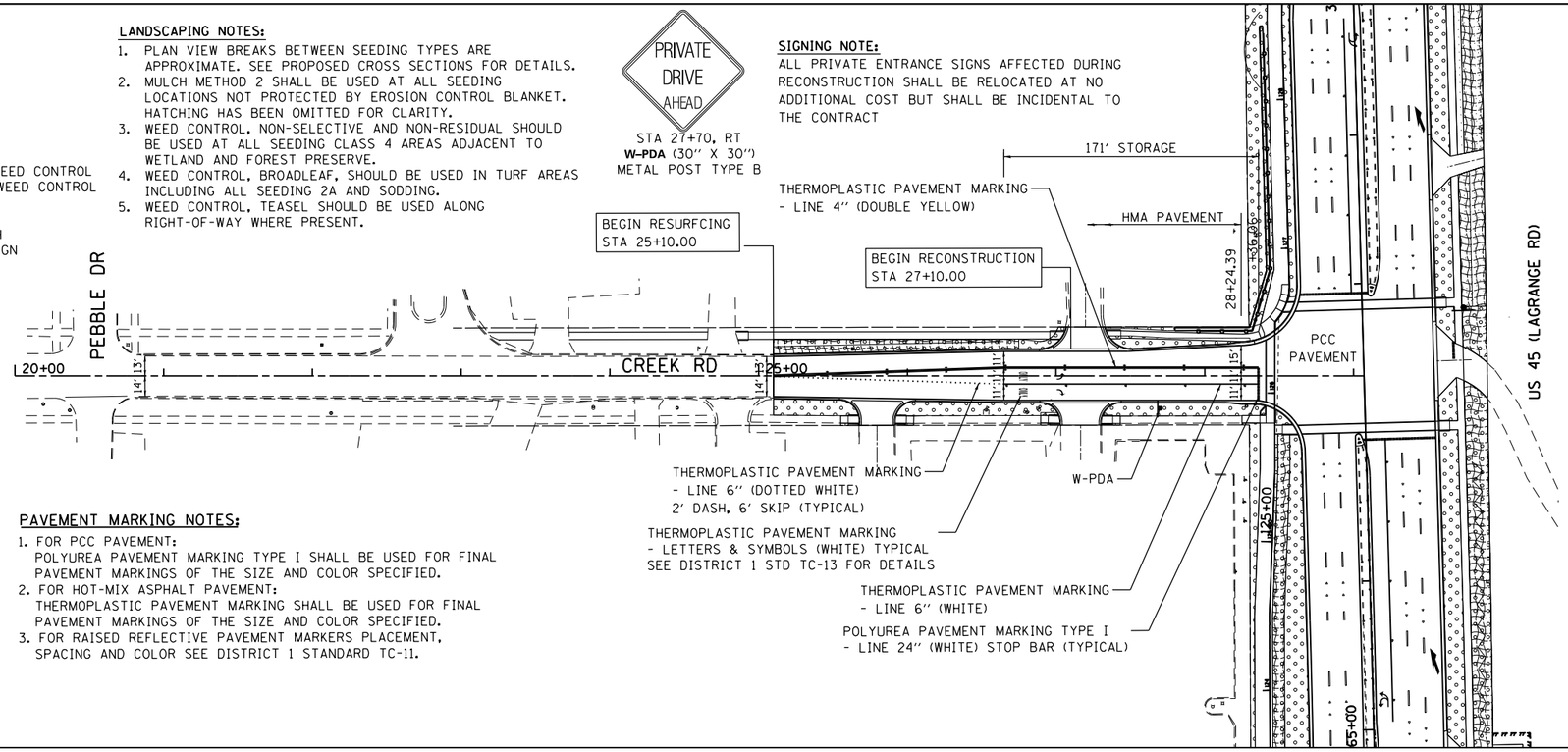

LEGEND

- ONE-WAY CRYSTAL MARKER
- ONE-WAY AMBER MARKER
- TWO-WAY AMBER MARKER

PAVEMENT MARKING NOTES:

1. FOR PCC PAVEMENT:
   POLYUREA PAVEMENT MARKING TYPE I SHALL BE USED FOR FINAL PAVEMENT MARKINGS OF THE SIZE AND COLOR SPECIFIED.
2. FOR HOT-MIX ASPHALT PAVEMENT:
   THERMOPLASTIC PAVEMENT MARKING SHALL BE USED FOR FINAL PAVEMENT MARKINGS OF THE SIZE AND COLOR SPECIFIED.
3. FOR RAISED REFLECTIVE PAVEMENT MARKERS PLACEMENT, SPACING AND COLOR SEE DISTRICT 1 STANDARD TC-11.

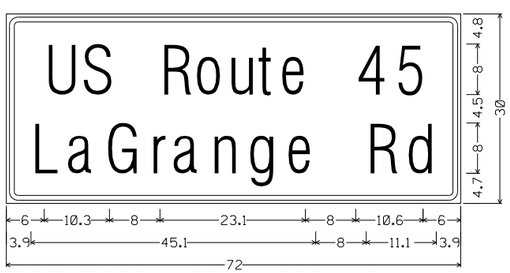

D3-2: 72"x30"; 1.9" Radius, 0.8" Border, 0.5" Indent, Green on Green;
[US Route 45] White C 2K; [LaGrange Rd] White D 2K;
Table of widths and spaces.

6.0	U 4.5	1.3	S 4.5	8.0	R 4.5	1.0	o 4.0	1.2	u 4.0	0.8	t 2.9	0.6	e 4.1

8.0	4 4.9	1.2	5 4.5	6.0

3.9	L 4.9	0.7	a 4.5	1.6	G 5.4	1.6	r 3.0	0.6	a 4.6	1.5	n 4.7	1.2	g 4.8	1.3	e 4.7

8.0	R 5.4	0.9	d 4.8	3.9	

D3–2

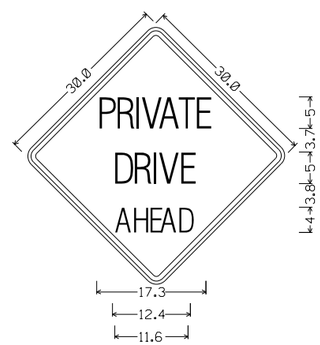

1.5" Radius, 0.6" Border, 0.4" Indent, Black on Yellow;
[PRIVATE] B 2K;
[DRIVE] B 2K;
[AHEAD] B 2K;
Table of widths and spaces.

3.4	P 2.1	0.7	R 2.2	0.8	I 0.6	0.7	V 2.4	0.3	A 2.7	0.3	T 1.9	0.7	E 1.9	3.3

5.8	D 2.2	0.9	R 2.2	0.8	I 0.6	0.7	V 2.4	0.7	E 1.9	5.8	

6.2	A 2.2	0.5	H 1.7	0.9	E 1.5	0.4	A 2.1	0.6	D 1.7	6.2	

W–PDA

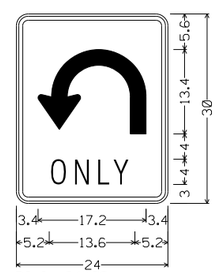

R3-8U_24X30;
1.9" Radius, 0.6" Border, 0.4" Indent, Black on White;
UL ir=5, s=2.5;
[ONLY] D 2K;
Table of widths and spaces.

3.4	↶ 17.2	3.4

5.2	O 2.9	0.8	N 2.8	0.9	L 2.5	0.2	Y 3.5	5.2

R3–8U

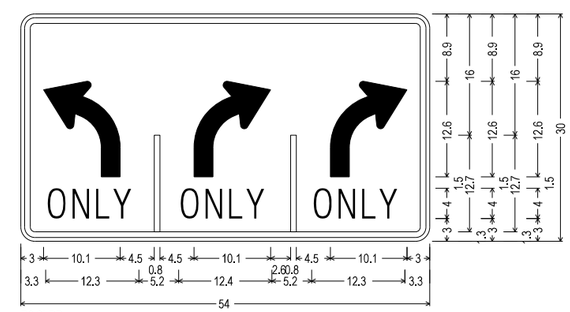

R3-8LRR
1.9" Radius, 0.8" Border, 0.5" Indent, Black on White;
R3-8 left turn arrow ir=5.75, s=2.5; [ONLY] D 2K specified length;
R3-8 left turn arrow ir=5.75, s=2.5; [ONLY] D 2K specified length;
R3-8 left turn arrow ir=5.75, s=2.5; [ONLY] D 2K specified length;
Table of widths and spaces.

3.0	↰ 10.1	4.5	| 0.8	4.5	↱ 10.1	2.6	| 0.8	4.5	↱ 10.1	3.0

3.3	O 2.8	0.4	N 2.7	0.4	L 2.5	0.1	Y 3.4	

5.2	O 2.9	0.3	N 2.8	0.3	L 2.5	0.1	Y 3.5	

5.2	O 2.8	0.4	N 2.7	0.4	L 2.5	0.1	Y 3.4	3.3

R3–8LRR

URS
100 S. WACKER DR.
SUITE 500
CHICAGO IL 60606
TEL (312)-939-0000
FAX (312)-939-4498

FILE NAME = D160M62-SHT-LNDSCP-PMK07.dgn	USER NAME = Frank.Stallone	DESIGNED - JTF	REVISED -
		DRAWN - JTF	REVISED -
	PLOT SCALE = 100.000000 ' / in.	CHECKED - MJT	REVISED -
SHT.DOUBLE PLAN	PLOT DATE = 3/13/2013	DATE - 03/13/13	REVISED -

STATE OF ILLINOIS
DEPARTMENT OF TRANSPORTATION

LANDSCAPING, PAVEMENT MARKING AND SIGNING PLAN
CREEK RD

SCALE: 1"=50' | SHEET 7 OF 7 SHEETS | STA. BEGIN TO STA. END

F.A.P RTE.	SECTION	COUNTY	TOTAL SHEETS	SHEET NO.
330	103R-5	COOK	778	263
	LA-07	CONTRACT NO. 60M62		
		ILLINOIS FED. AID PROJECT		

LOOP DETECTOR NOTES

1. EACH PAIR OF LOOP WIRES SHALL BE PLACED IN A SEPARATE EMPTY COILABLE NONMETALLIC CONDUIT FROM THE EDGE OF PAVEMENT TO THE HANDHOLE. SPACING BETWEEN THE HOLES DRILLED IN THE PAVEMENT SHALL NOT BE LESS THAN 6" (150 mm). EMPTY COILABLE NONMETALLIC CONDUIT SHALL BE INCLUDED IN THE COST OF THE LOOP WIRE.

2. THE NUMBER OF LOOP TURNS SHALL BE AS RECOMMENDED BY THE AMPLIFIER MANUFACTURER. ALL ADJACENT SIDES OF THE LOOPS SHALL BE INSTALLED IN SUCH A WAY THAT THE CURRENT FLOW IS IN THE SAME DIRECTION TO REINFORCE ITS MAGNETIC FIELDS FOR SMALL VEHICLE DETECTION.

3. EACH LOOP LEAD-IN SHALL BE IDENTIFIED AND PERMANENTLY TAGGED IN THE HANDHOLE. EACH LEAD-IN CABLE TAG SHALL INDICATE THE LOCATION OF THE LOOP, LOOP ROTATION (CLOCKWISE/COUNTERCLOCKWISE), LOOP LEAD-IN DIRECTION (IN OR OUT), LOOP CABLE NUMBER AND LOCATION IN CABINET, AND NUMBER OF TURNS IN THE DETECTOR LOOPS IN WATER PROOF INK AS INDICATED ON THE DISTRICT 1 STANDARD TRAFFIC SIGNAL DESIGN DETAIL. THE CONTRACTOR SHALL MARK LOOP LOCATIONS ON RECORD DRAWINGS AND PRESENT TO THE ENGINEER AFTER FINAL INSPECTION. LOOPS SHALL BE MARKED BY LANE AND LOOP NUMBER. SEE DETAIL BELOW.

4. ALL LOOP CABLE SHALL BE FASTENED WITH PLASTIC TIE WRAP TO THE HANDHOLE HOOKS.

5. IN ASPHALT PAVEMENT, LOOPS SHOULD BE PLACED IN THE BINDER AND DIVEHOLES MARKED AT THE CURB WITH A SAW-CUT. THE SAW-CUT SHALL BE CUT IN ACCORDANCE WITH LOCAL AND E.P.A. DUST CONTROL REQUIREMENTS. DETECTOR LOOP(S) SHALL NOT BE INSTALLED IN WET CONDITIONS AND THE SAW-CUTS MUST BE FREE OF DEBRIS AND RESIDUE SUCH AS DUST AND WATER WHICH IS TO BE ACHIEVED BY THE USE OF COMPRESSED AIR, WIRE BRUSHING AND HEAT DRYING ACCORDING TO SEALANT MANUFACTURER REQUIREMENTS. THE DETECTOR WIRE SHALL BE HELD IN PLACE BY THE USE OF FORM WEDGES. WEDGES SHALL BE SPACED NO MORE THAN 18" (450 mm) APART.

6. LOOP SPLICES SHALL BE SOLDERED USING A SOLDERING IRON. BLOW TORCHES OR OTHER DEVICES WHICH OXIDIZE COPPER CABLE SHALL NOT BE ALLOWED FOR SOLDERING OPERATIONS. SEE DETAIL BELOW RIGHT.

7. PREFORMED DETECTOR LOOPS SHALL BE USED, AS SHOWN ON THE PLANS, WHERE NEW CONCRETE PAVEMENT IS PROPOSED. THE INSTALLATION OF PREFORMED LOOPS SHALL BE IN ACCORDANCE WITH THE DISTRICT 1 SPECIFICATIONS OR AS DIRECTED BY THE ENGINEER.

LOOP LEAD-IN CABLE TAG

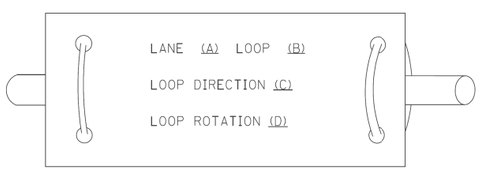

A. LANE 1 IS THE LANE CLOSEST TO THE CENTERLINE OF THE ROADWAY

B. LOOP #1 IS THE LOOP IN THE LANE CLOSEST TO THE INTERSECTION.

C. LABEL LOOP CABLE "IN" OR LOOP CABLE "OUT".

D. LABEL LOOP CABLE CLOCKWISE OR LOOP CABLE COUNTERCLOCKWISE.

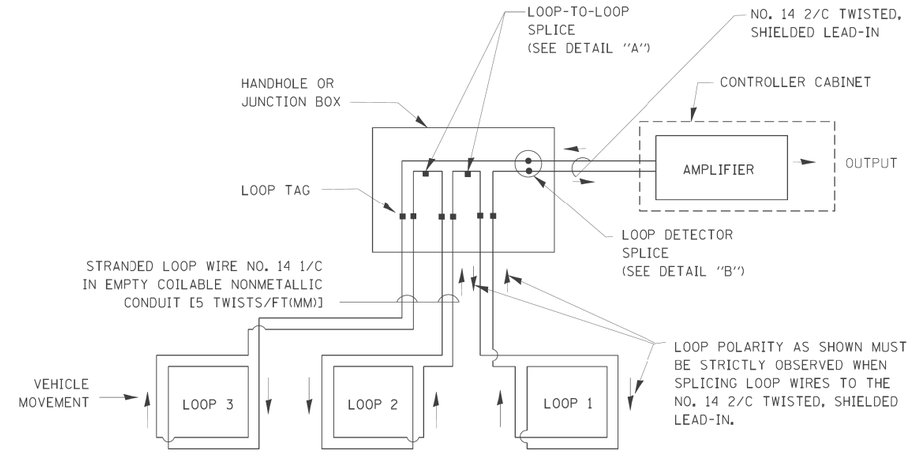

DETECTOR LOOP WIRING SCHEMATIC

- LOOPS SHALL BE SPLICED IN SERIES.
- SAW-CUTS SHALL BE A MINIMUM WIDTH OF 5/16" (8 mm).
- SAW-CUT DEPTHS SHALL BE 3" (75 mm). IF IN CONCRETE, THE SAW-CUT DEPTH SHALL BE TO THE TOP OF THE REINFORCEMENT.
- LOOP CORNERS SHALL BE DRILLED WITH A 2" (50 mm) DIAMETER CORE.

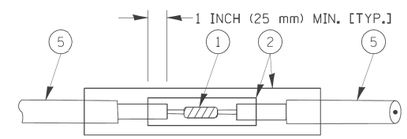

DETAIL "A"
LOOP-TO-LOOP SPLICE

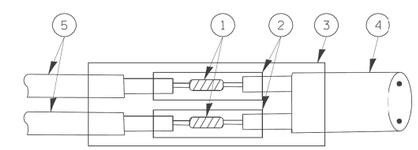

DETAIL "B"
LOOP-TO-CONTROLLER SPLICE

TYPE I LOOP

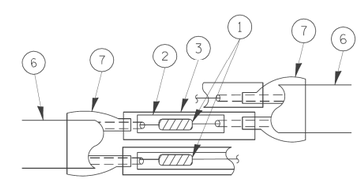

DETAIL "A"
LOOP-TO-LOOP SPLICE

PRE-FORMED LOOP

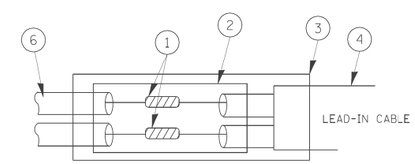

DETAIL "B"
LOOP-TO-CONTROLLER SPLICE

LOOP DETECTOR SPLICE

1. WESTERN UNION SPLICE SOLDERED WITH ROSIN CORE FLUX. ALL EXPOSED SURFACES OF THE SOLDER SHALL BE SMOOTH.
2. WCSMW 30/100 HEAT SHRINK TUBE, MINIMUM LENGTH 3" (75 mm), UNDERWATER GRADE.
3. WCS 200/750 HEAT SHRINK TUBE, MINIMUM LENGHT 6" (150 mm), UNDERWATER GRADE.
4. NO. 14 2/C TWISTED, SHIELDED CABLE.
5. LOOP CONDUCTOR WITH FLEXIBLE PLASTIC TUBE.
6. PRE-FORMED LOOP
7. XL POLYOLEFIN 2 CONDUCTOR BREAKOUT SEALS. TYCO CBR-2 OR APPROVED EQUAL

TRAFFIC SIGNAL MAST ARM AND SIGNAL POST

MAST ARM MOUNTED SIGNALS IN EXISTING, PROPOSED OR FUTURE SIDEWALK/BICYCLE PATH AREA. INTERSECTION SHOWN WITH PEDESTRIAN SIGNALS AND PEDESTRIAN PUSHBUTTON DETECTORS.

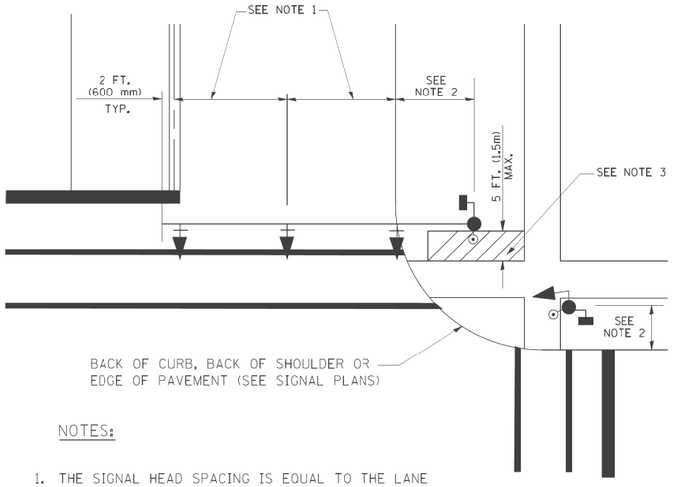

NOTES:

1. THE SIGNAL HEAD SPACING IS EQUAL TO THE LANE WIDTH OR AS SHOWN ON THE TRAFFIC SIGNAL PLAN.
2. REFER TO THE TRAFFIC SIGNAL EQUIPMENT OFFSET TABLE.
3. PROVIDE A LEVEL ALL-WEATHER SURFACE (CONCRETE SIDEWALK, ASPHALT BICYCLE PATH SURFACE OR MATCHING MATERIAL TO THE ADJACENT SURFACE) UP TO THE MAST ARM SHAFT OR THE SIGNAL POST.
4. THE FACE OF THE PEDESTRIAN PUSHBUTTON SHALL BE PARALLEL TO THE CROSSWALK TO BE USED.
5. THE LOCATIONS AND INSTALLATION OF PEDESTRIAN SIGNAL HEADS AND PEDESTRIAN PUSHBUTTONS SHALL MEET THE REQUIREMENTS OF THE MUTCD AND INFORMATION FOUND IN THE "AMERICANS WITH DISABILITIES ACT ACCESSIBILITY GUIDELINES FOR BUILDINGS AND FACILITIES."

PEDESTRIAN SIGNAL POST AND PEDESTRIAN PUSH BUTTON POST

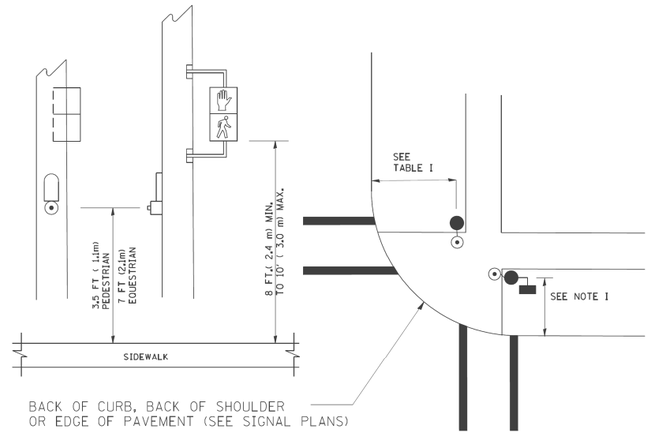

NOTES:

1. REFER TO THE TRAFFIC SIGNAL EQUIPMENT OFFSET TABLE.
2. PROVIDE A LEVEL ALL-WEATHER SURFACE (CONCRETE SIDEWALK, ASPHALT BICYCLE PATH SURFACE OR MATCHING MATERIAL TO THE ADJACENT SURFACE) UP TO THE PEDESTRIAN SIGNAL POST OR THE PEDESTRIAN PUSH BUTTON POST.
3. THE FACE OF THE PEDESTRIAN PUSHBUTTON SHALL BE PARALLEL TO THE CROSSWALK TO BE USED.
4. THE LOCATIONS AND INSTALLATION OF PEDESTRIAN SIGNAL HEADS AND PEDESTRIAN PUSHBUTTONS SHALL MEET THE REQUIREMENTS OF THE MUTCD AND INFORMATION FOUND IN THE "AMERICANS WITH DISABILITIES ACT ACCESSIBILITY GUIDELINES FOR BUILDINGS AND FACILITIES."

RECOMMENDED PUSHBUTTON LOCATIONS

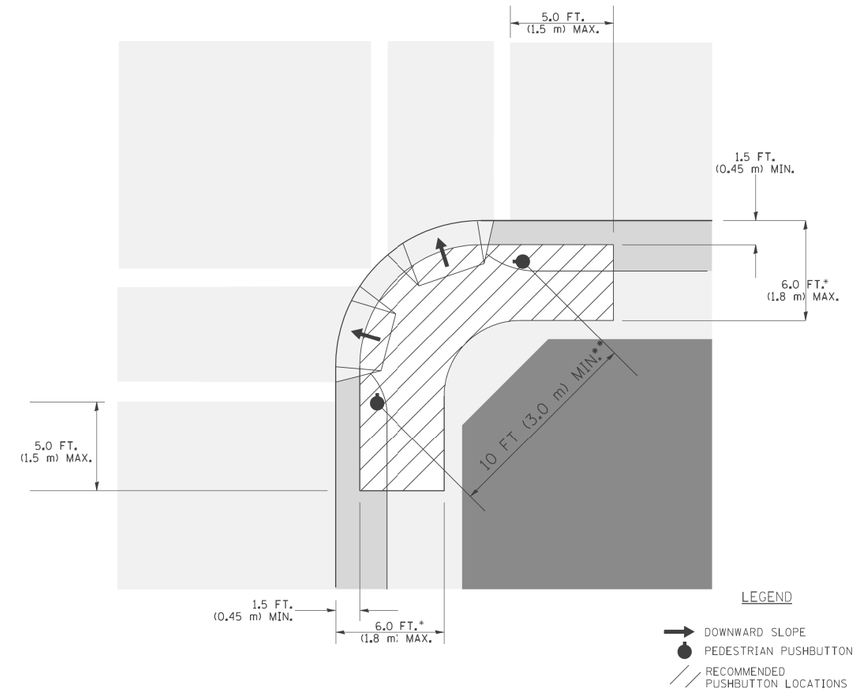

* WHERE THERE ARE CONSTRAINTS THAT MAKE IT IMPRACTICAL TO PLACE THE PEDESTRIAN PUSHBUTTON BETWEEN 1.5 FT (0.45 m) AND 6 FT (1.8 m) FROM THE EDGE OF THE CURB, SHOULDER, OR PAVEMENT, IT SHOULD NOT BE FURTHER THAN 10 FT (3 m) FROM THE EDGE OF CURB, SHOULDER, OR PAVEMENT.

** WHERE THERE ARE CONSTRAINTS ON A PARTICULAR CORNER THAT MAKE IT IMPRACTICAL TO PROVIDE THE 10 FT (3 m) SEPERATION BETWEEN THE TWO PEDESTRIAN PUSHBUTTONS, THE PUSHBUTTONS MAY BE PLACED CLOSER TOGETHER OR ON THE SAME POLE.

NOTES:

1. PEDESTRIAN SIGNAL HEADS SHALL BE MOUNTED WITH THE BOTTOM OF THE SIGNAL HOUSING INCLUDING BRACKETS NOT LESS THAN 8 FT (2.4 m) OR MORE THAN 10 FT (3 m) ABOVE SIDEWALK LEVEL, AND SHALL BE POSITIONED AND ADJUSTED TO PROVIDE MAXIMUM VISIBILITY AT THE BEGINNING OF THE CONTROLLED CROSSWALK.
2. THE BOTTOM OF THE SIGNAL HOUSING (INCLUDING BRACKETS) OF A VEHICULAR SIGNAL FACE THAT IS NOT LOCATED OVER A HIGHWAY SHALL BE AT LEAST 8 FT (2.4 m) BUT NOT MORE THAN 19 FT (5.8 m) ABOVE THE SIDEWALK OR, IF THERE IS NO SIDEWALK, ABOVE THE PAVEMENT GRADE AT THE CENTER OF THE ROADWAY.
3. THE BOTTOM OF THE SIGNAL HOUSING AND ANY RELATED ATTACHMENTS TO A SIGNAL FACE LOCATED OVER ANY PORTION OF A HIGHWAY SHALL BE ACCORDING TO CURRENT STATE STANDARDS 877001, 877002, 877006, 877011 AND 877012 WITH A MINIMUM OF 16 FT (5.0 m) AND A MAXIMUM OF 18 FT. (5.5 m) FROM THE HIGHEST POINT OF PAVEMENT.
4. THE BOTTOM OF THE TEMPORARY SPAN WIRE MOUNTED SIGNAL HOUSING AND ANY RELATED ATTACHMENTS TO A SIGNAL FACE LOCATED OVER ANY PORTION OF A HIGHWAY SHALL BE ACCORDING TO CURRENT STATE STANDARD 880001 WITH A MINIMUM OF 17 FT (5.18 m) FROM THE HIGHEST POINT OF PAVEMENT.
5. THE TOP OF THE SIGNAL HOUSING OF A SIGNAL FACE LOCATED OVER ANY PORTION OF A HIGHWAY SHALL NOT BE MORE THAN 25.6 FT (7.8 m) ABOVE THE PAVEMENT.

TRAFFIC SIGNAL EQUIPMENT OFFSET

TRAFFIC SIGNAL EQUIPMENT	COMBINATION CONCRETE CURB AND GUTTER (MINIMUM DISTANCE FROM BACK OF CURB TO CENTERLINE OF FOUNDATION)	SHOULDER/NON-CURBED AREA (MINIMUM DISTANCE FROM EDGE OF PAVEMENT TO CENTERLINE OF FOUNDATION)
TRAFFIC SIGNAL MAST ARM POLE	6 FT (1.8m)	SHOULDER WIDTH + 2 FT (0.6m), MINIMUM 10 FT (3.0m)
TRAFFIC SIGNAL POST	4 FT (1.2m)	SHOULDER WIDTH + 2 FT (0.6m), MINIMUM 10 FT (3.0m)
PEDESTRIAN SIGNAL POST	4 FT (1.2m)	SHOULDER WIDTH + 2 FT (0.6m), MINIMUM 10 FT (3.0m)
PEDESTRIAN PUSHBUTTON POST	4 FT (1.2m)	SHOULDER WIDTH + 2 FT (0.6m), MINIMUM 10 FT (3.0m)
TEMPORARY WOOD POLE	6 FT (1.8m)	SHOULDER WIDTH + 2 FT (0.6m), MINIMUM 10 FT (3.0m)
CONTROLLER CABINET	6 FT (1.8m) MINIMUM DISTANCE SEE NOTE 2	SHOULDER WIDTH + 6 FT (1.8m), MINIMUM 16 FT (4.9m) SEE NOTE 3.
SERVICE INSTALLATION, GROUND MOUNT	6 FT (1.8m) MINIMUM DISTANCE SEE NOTE 2	SHOULDER WIDTH + 6 FT (1.8m), MINIMUM 16 FT (4.9m) SEE NOTE 3.

NOTES:

1. CONTACT THE "AREA TRAFFIC SIGNAL MAINTENANCE AND OPERATIONS ENGINEER" FOR ASSISTANCE IN LOCATING THE TRAFFIC SIGNAL EQUIPMENT WHEN THERE ARE CONFLICTS WITH DITCHES OR THE MINIMUM OFFSET DISTANCES CANNOT BE MET.
2. MINIMUM DISTANCE FROM THE BACK OF CURB TO THE ROADWAY SIDE OF THE FOUNDATION.
3. MINIMUM DISTANCE FROM THE EDGE OF PAVEMENT TO THE ROADWAY SIDE OF THE FOUNDATION.
4. ANY CHANGES TO THE OFFSETS OF THE FOUNDATIONS, FROM THE MINIMUM DISTANCES LISTED IN THE "TRAFFIC SIGNAL EQUIPMENT OFFSET" CHART AND THE TRAFFIC SIGNAL INSTALLATION PLAN, COULD EFFECT THE PLACEMENT OF THE SIGNAL HEADS, PEDESTRIAN SIGNAL HEADS AND THE PEDESTRIAN PUSHBUTTONS. THE SIGNAL HEAD PLACEMENT ON THE MAST ARMS SHALL REMAIN AS PER THE TRAFFIC SIGNAL INSTALLATION PLAN AND THE "TRAFFIC SIGNAL MAST ARM AND SIGNAL POST" DETAIL ABOVE. THE PROPOSED MAST ARM LENGTHS MAY NEED TO BE REVISED TO MEET THE ABOVE REQUIREMENTS. THE PEDESTRIAN SIGNAL HEADS AND PEDESTRIAN PUSHBUTTONS MUST MEET THE REQUIREMENTS UNDER THE DETAILS ON THIS SHEET.

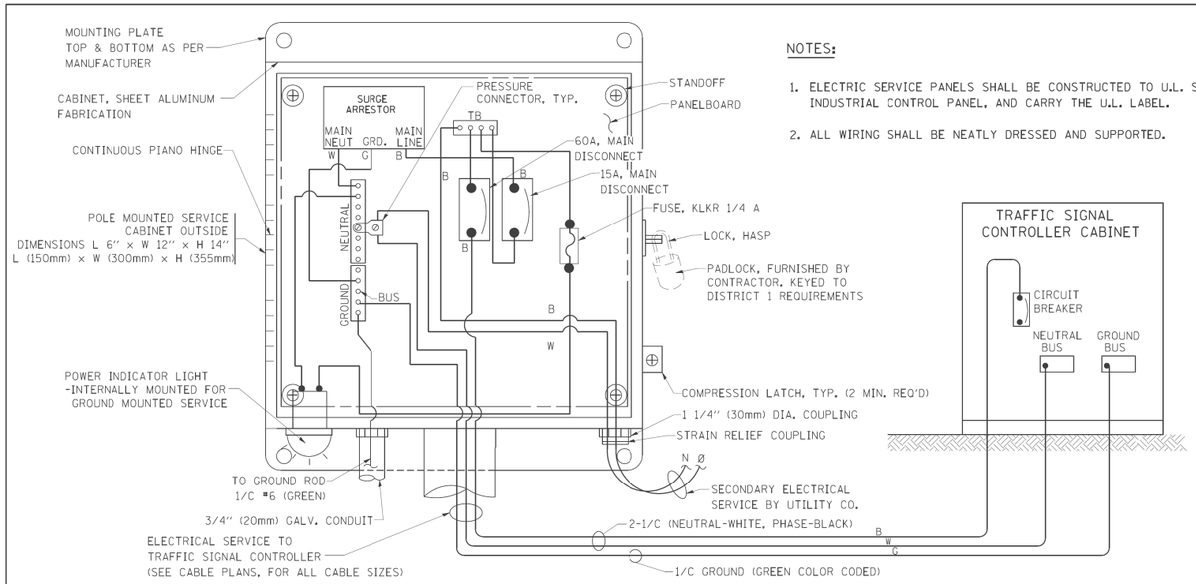

NOTES:

1. ELECTRIC SERVICE PANELS SHALL BE CONSTRUCTED TO U.L. STD 508, INDUSTRIAL CONTROL PANEL, AND CARRY THE U.L. LABEL.
2. ALL WIRING SHALL BE NEATLY DRESSED AND SUPPORTED.

ELECTRICAL SERVICE – PANEL DIAGRAM (TYPICAL FOR POLE AND GROUND MOUNTED SERVICE)

SERVICE INSTALLATION POLE MOUNT (SHOWN)

(NOT TO SCALE)

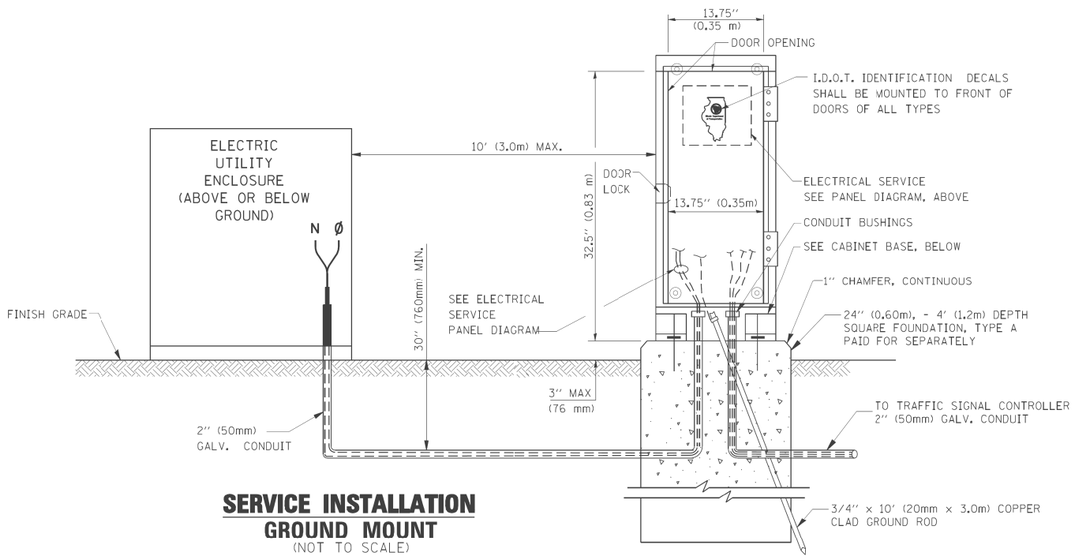

SERVICE INSTALLATION
GROUND MOUNT
(NOT TO SCALE)

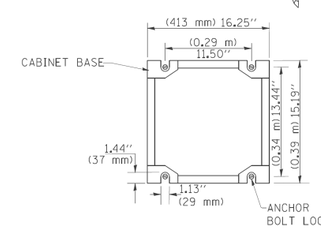

CABINET – BASE BOLT PATTERN
(NOT TO SCALE)

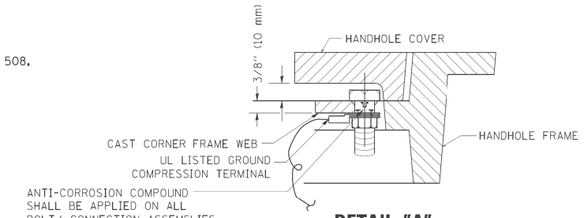

DETAIL "A"

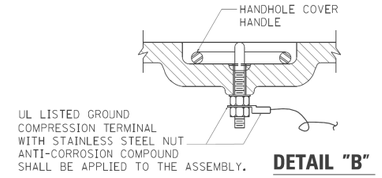

DETAIL "B"

NOTES:

GROUNDING SYSTEM

1. THE GROUNDING SYSTEM SHALL CONSIST OF AN INSULATED CONDUCTOR TYPE XLP, NO. 6 A.W.G., STRANDED COPPER TO BE INSTALLED IN RACEWAYS. THE GROUNDING CABLE SHALL BE INSTALLED IN A CONTINUOUS MANNER AS SHOWN ON THE CABLE PLAN PROVIDED. ALL GROUNDING CONDUCTORS SHALL BE BONDED TO METAL ENCLOSURE (HANDHOLE, POST, MAST ARM, CONTROLLER, ETC.). GROUND ROD SHALL BE 3/4" DIA. × 10'-0" (20mm × 3.0m) LONG, COPPER CLAD. ONE GROUND ROD SHALL BE INSTALLED AT ALL POST FOUNDATIONS, POLE FOUNDATIONS, CONTROLLER CABINET FOUNDATION AND ELECTRICAL SERVICE INSTALLATION AS INDICATED ON THE CABLE PLAN. IF THERE ARE ANY SPECIAL CONDITIONS SUCH AS SUB-SURFACE CONDITIONS OR INSTALLATION PROBLEMS, THE RESIDENT ENGINEER SHALL BE NOTIFIED OR CONTACT THE BUREAU OF TRAFFIC, ILLINOIS DEPARTMENT OF TRANSPORTATION DISTRICT ONE AT (847) 705-4139.
2. THE NEUTRAL CONDUCTOR AND THE GROUND CONDUCTOR SHALL BE CONNECTED IN THE SERVICE INSTALLATION. AT NO OTHER POINT IN THE TRAFFIC SIGNAL SYSTEM SHALL THE NEUTRAL AND GROUND CONDUCTORS BE CONNECTED.
3. ALL EQUIPMENT GROUNDING CONDUCTORS SHALL TERMINATE AT THE GROUND BUS IN THE CONTROLLER CABINET.
4. THE CONTRACTOR SHALL PROVIDE A GROUND CABLE WITH CONNECTORS BETWEEN THE HANDHOLE COVER AND HANDHOLE FRAME.

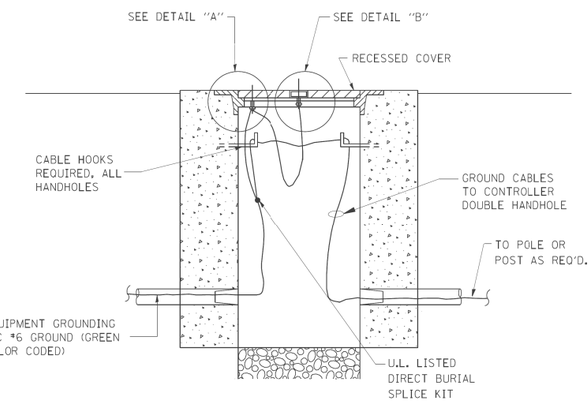

HANDHOLE COVER & FRAME – GROUNDING DETAIL
(NOT TO SCALE)

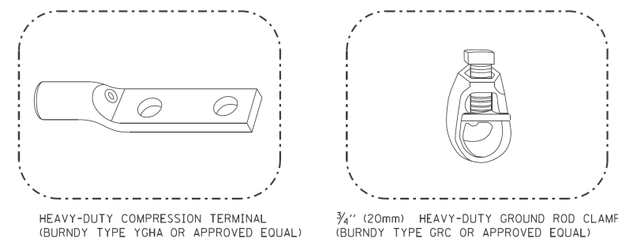

HEAVY-DUTY COMPRESSION TERMINAL
(BURNDY TYPE YGHA OR APPROVED EQUAL)

3/4" (20mm) HEAVY-DUTY GROUND ROD CLAMP
(BURNDY TYPE GRC OR APPROVED EQUAL)

NOTES:

- ALL CLAMPS SHALL BE BRONZE OR COPPER, UL APPROVED.
- GROUND CABLE SHALL BE LOOPED OVER HOOKS IN THE HANDHOLES
  6.5' (2.0m) SLACK SHALL BE PROVIDED IN SINGLE HANDHOLES
  13' (4.0m) OF SLACK SHALL BE PROVIDED IN DOUBLE HANDHOLES.
  5' (1.4m) OF SLACK SHALL BE PROVIDED BETWEEN FRAME AND COVER.

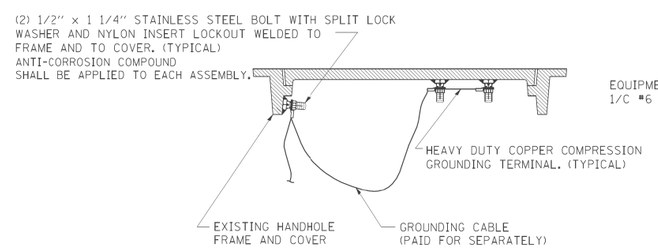

EXISTING HANDHOLE COVER & FRAME – GROUNDING DETAIL
(NOT TO SCALE)

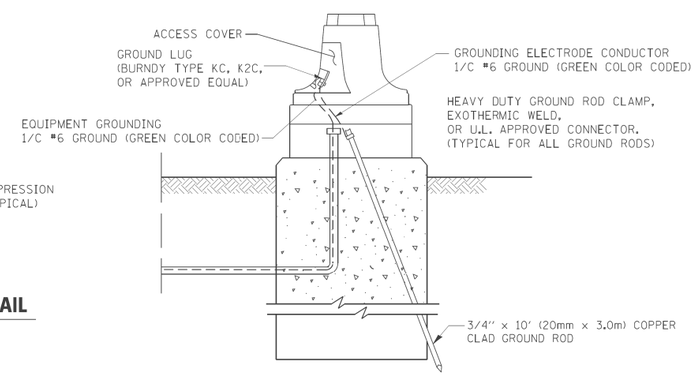

MAST ARM POLE / POST-GROUNDING DETAIL
(NOT TO SCALE)

FILE NAME = c:\pw_work\PWIDOT\BAUERDL\d0108315\ts05.dgn	USER NAME = bauerdl	DESIGNED - DAD	REVISED -	STATE OF ILLINOIS DEPARTMENT OF TRANSPORTATION	DISTRICT ONE STANDARD TRAFFIC SIGNAL DESIGN DETAILS	F.A.P. RTE. 330	SECTION 103R-5	COUNTY COOK	TOTAL SHEETS 778	SHEET NO. 266
		DRAWN - BCK	REVISED -				TS-05	CONTRACT NO. 60M62		
	PLOT SCALE = 50.0000 ' / IN.	CHECKED - DAD	REVISED -		SCALE: NONE	SHEET NO. 3 OF 6 SHEETS	STA.	TO STA.		
	PLOT DATE = 11/4/2009	DATE - 10-28-09	REVISED -			FED. ROAD DIST. NO. 1	ILLINOIS	FED. AID PROJECT		

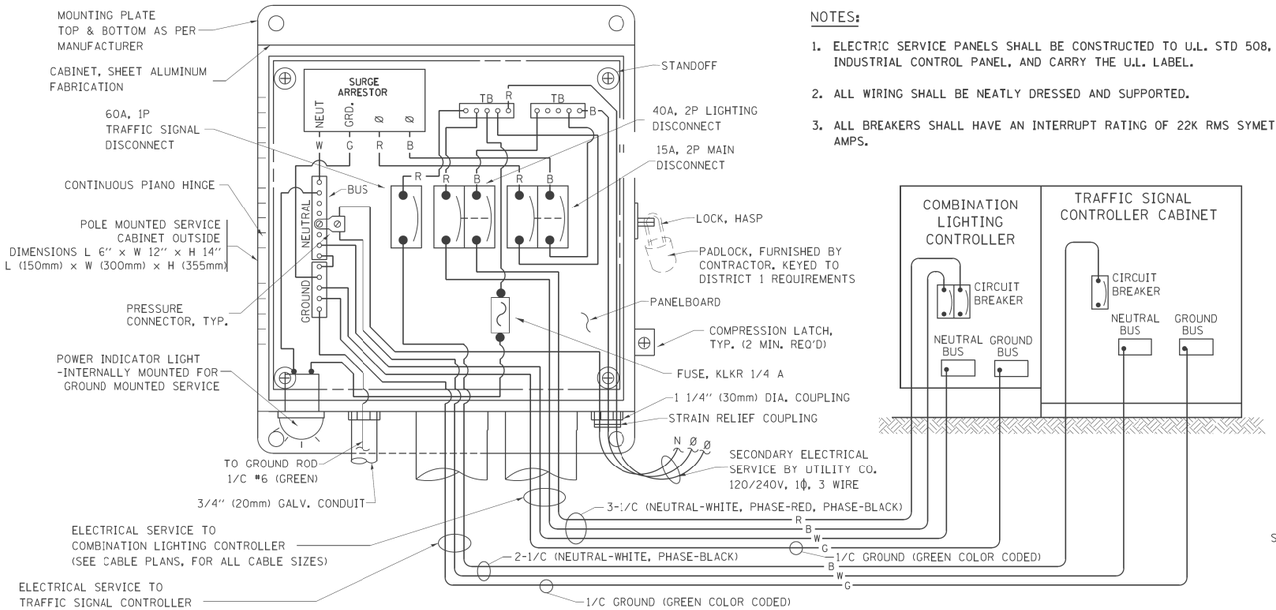

ELECTRICAL SERVICE – PANEL DIAGRAM (TYPICAL FOR POLE AND GROUND MOUNTED SERVICE)

SERVICE INSTALLATION POLE MOUNT (SHOWN)

(NOT TO SCALE)

NOTES:

1. ELECTRIC SERVICE PANELS SHALL BE CONSTRUCTED TO U.L. STD 508, INDUSTRIAL CONTROL PANEL, AND CARRY THE U.L. LABEL.
2. ALL WIRING SHALL BE NEATLY DRESSED AND SUPPORTED.
3. ALL BREAKERS SHALL HAVE AN INTERRUPT RATING OF 22K RMS SYMETRICAL AMPS.

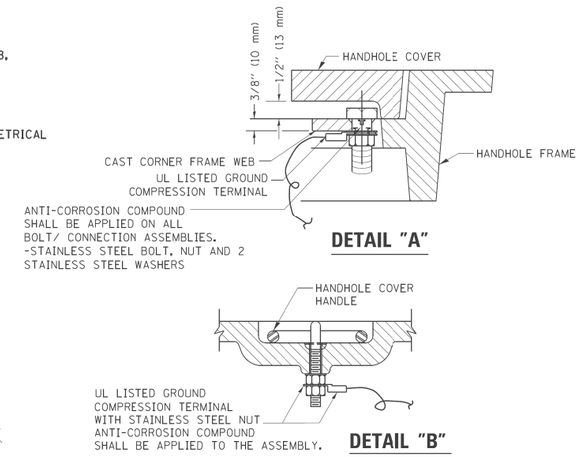

NOTES:

GROUNDING SYSTEM

1. THE GROUNDING SYSTEM SHALL CONSIST OF AN INSULATED CONDUCTOR TYPE XLP, NO. 6 A.W.G., STRANDED COPPER TO BE INSTALLED IN RACEWAYS. THE GROUNDING CABLE SHALL BE INSTALLED IN A CONTINUOUS MANNER AS SHOWN ON THE CABLE PLAN PROVIDED. ALL GROUNDING CONDUCTORS SHALL BE BONDED TO METAL ENCLOSURE (HANDHOLE, POST, MAST ARM, CONTROLLER, ETC.). GROUND ROD SHALL BE 3/4" DIA. x 10'-0" (20mm x 3.0m) LONG, COPPER CLAD. ONE GROUND ROD SHALL BE INSTALLED AT ALL POST FOUNDATIONS, POLE FOUNDATIONS, CONTROLLER CABINET FOUNDATION AND ELECTRICAL SERVICE INSTALLATION AS INDICATED ON THE CABLE PLAN. IF THERE ARE ANY SPECIAL CONDITIONS SUCH AS SUB-SURFACE CONDITIONS OR INSTALLATION PROBLEMS, THE RESIDENT ENGINEER SHALL BE NOTIFIED OR CONTACT THE BUREAU OF TRAFFIC, ILLINOIS DEPARTMENT OF TRANSPORTATION DISTRICT ONE AT (847) 705-4139.
2. THE NEUTRAL CONDUCTOR AND THE GROUND CONDUCTOR SHALL BE CONNECTED IN THE SERVICE INSTALLATION. AT NO OTHER POINT IN THE TRAFFIC SIGNAL SYSTEM SHALL THE NEUTRAL AND GROUND CONDUCTORS BE CONNECTED.
3. ALL EQUIPMENT GROUNDING CONDUCTORS SHALL TERMINATE AT THE GROUND BUS IN THE CONTROLLER CABINET.
4. THE CONTRACTOR SHALL PROVIDE A GROUND CABLE WITH CONNECTORS BETWEEN THE HANDHOLE COVER AND HANDHOLE FRAME.

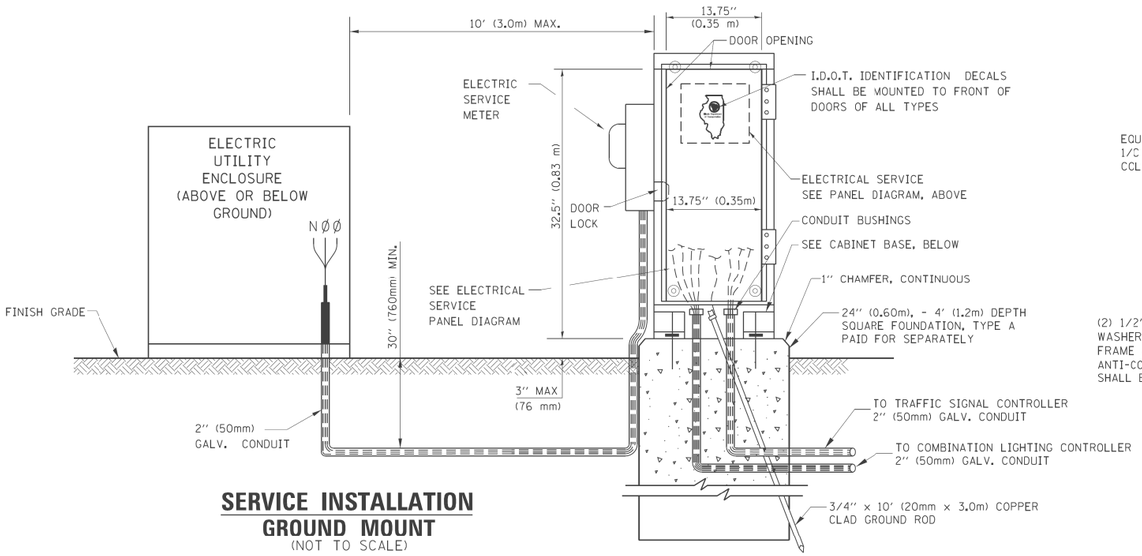

SERVICE INSTALLATION GROUND MOUNT

(NOT TO SCALE)

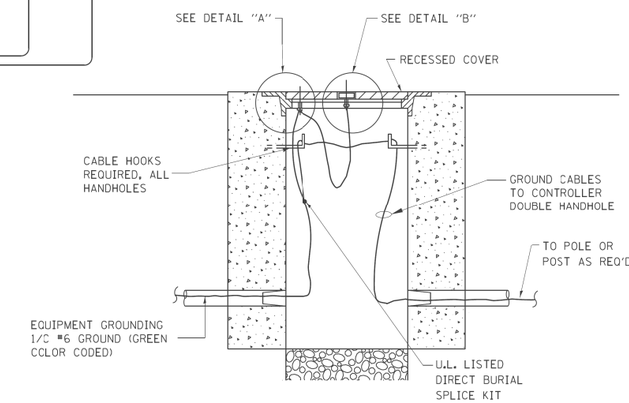

HANDHOLE COVER & FRAME – GROUNDING DETAIL

(NOT TO SCALE)

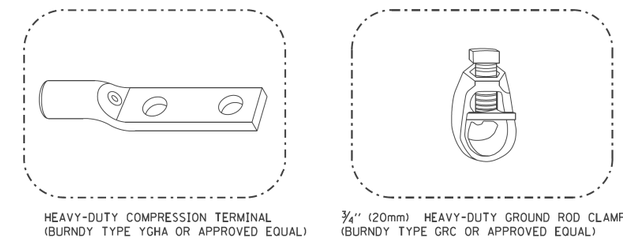

HEAVY-DUTY COMPRESSION TERMINAL (BURNDY TYPE YGHA OR APPROVED EQUAL)

3/4" (20mm) HEAVY-DUTY GROUND ROD CLAMP (BURNDY TYPE GRC OR APPROVED EQUAL)

NOTES:

- ALL CLAMPS SHALL BE BRONZE OR COPPER, UL APPROVED.
- GROUND CABLE SHALL BE LOOPED OVER HOOKS IN THE HANDHOLES
  6.5' (2.0m) SLACK SHALL BE PROVIDED IN SINGLE HANDHOLES
  13' (4.0m) OF SLACK SHALL BE PROVIDED IN DOUBLE HANDHOLES.
  5' (1.4m) OF SLACK SHALL BE PROVIDED BETWEEN FRAME AND COVER.

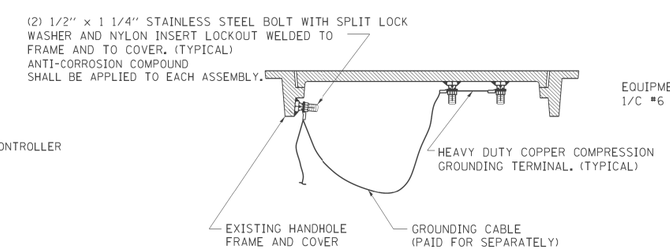

EXISTING HANDHOLE COVER & FRAME – GROUNDING DETAIL

(NOT TO SCALE)

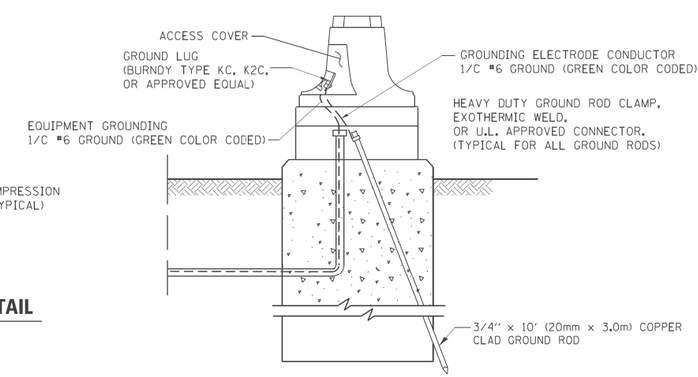

MAST ARM POLE / POST–GROUNDING DETAIL

(NOT TO SCALE)

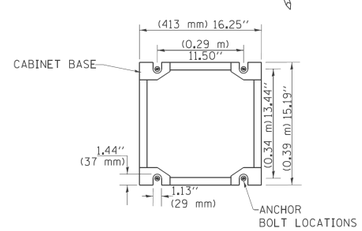

CABINET – BASE BOLT PATTERN

(NOT TO SCALE)

FILE NAME = c:\pw_work\pwidot\poulterma\d0259217\ComboDisconnectDetail.dgn	USER NAME = poulterma	DESIGNED - DAD	REVISED - MAP	STATE OF ILLINOIS DEPARTMENT OF TRANSPORTATION	DISTRICT 1 STANDARD COMBINATION LIGHTING DISCONNECT	F.A.P RTE.	SECTION	COUNTY	TOTAL SHEETS / SHEET NO.
		DRAWN - BCK	REVISED -			330	103R-5	COOK	778 / 267
	PLOT SCALE = 999.9980 ' / in.	CHECKED - DAD	REVISED -					CONTRACT NO. 60M62	
	PLOT DATE = 9/20/2011	DATE - 8/24/11	REVISED -		SCALE: SHEET NO. 7 OF 7 SHEETS STA. TO STA.	FED. ROAD DIST. NO.	ILLINOIS	FED. AID PROJECT	

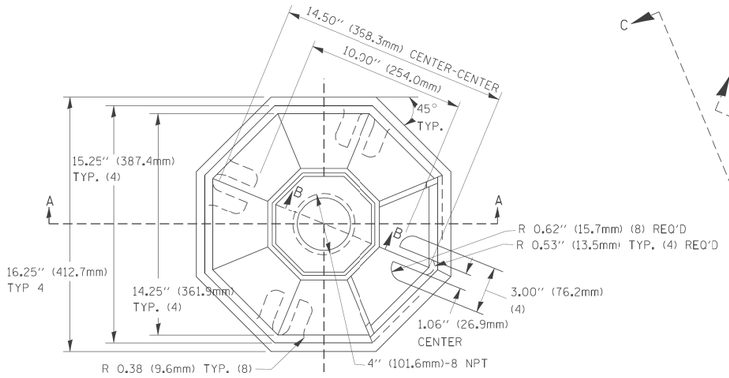

TOP VIEW

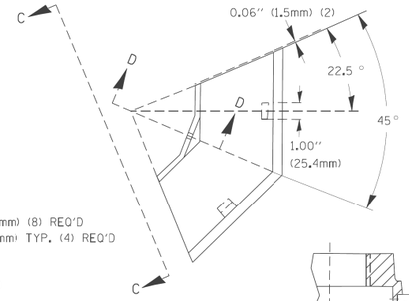

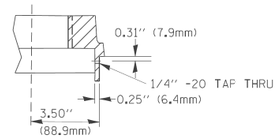

SECTION B-B

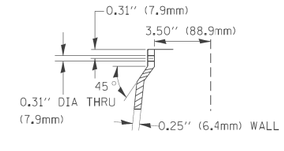

SECTION D-D

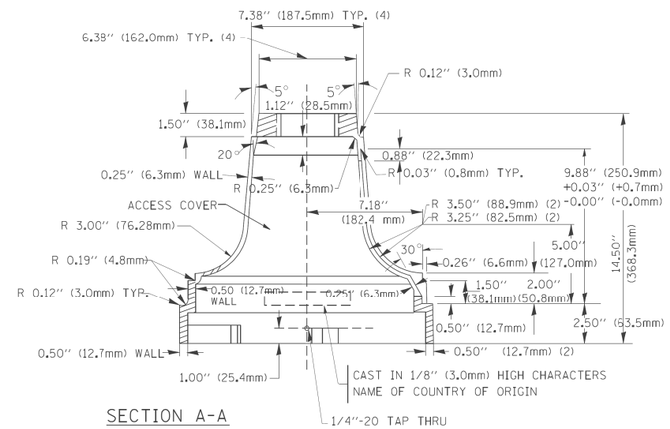

SECTION A-A

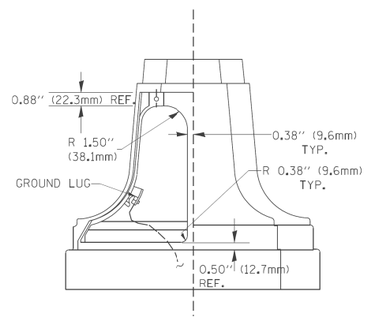

VIEW C-C

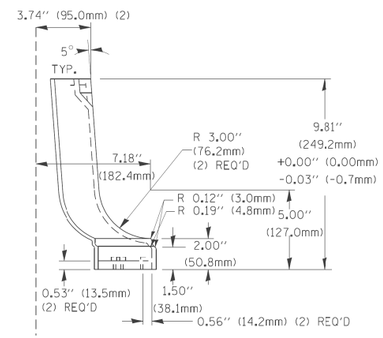

TRAFFIC SIGNAL POST - MOUNTING BASE - TYPE A

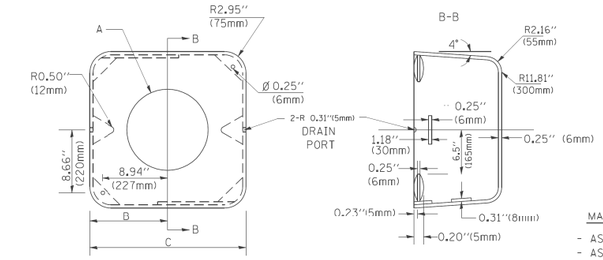

MATERIAL:

- ASTM A36 STEEL
- ASTM A-123 HOT DIPPED GALVANIZED

A	B	C	HEIGHT	WEIGHT
VARIES	9.5"(241mm)	19"(483mm)	7" (178mm) - 12" (300mm)	53 lbs (24kg)
VARIES	10.75"(273mm)	21.5"(546mm)	7" (178mm) - 12" (300mm)	68 lbs (31 kg)
VARIES	13.0"(330mm)	26"(660mm)	7" (178mm) - 12" (300mm)	81 lbs (37 kg)
VARIES	18.5"(470mm)	37"(940mm)	7" (178mm) - 12" (300mm)	126 lbs (57 kg)

SHROUD

NOTES:

1. DIMENSION "A" IS EQLAL TO THE DIAMETER OF THE MAST ARM POLE AT THE TOP OF THE SHROUD. THE SHROUD SHALL BE TIGHT TO THE MAST ARM POLE.
2. THE SUPPLIER SHALL VERIFIED THE ABOVE DIMENSIONS BASED ON MAST ARM REQUIREMENTS.
3. THE HEIGHT OF THE SHROUD SHALL COVER THE ANCHOR BOLTS, NJTS AND MAST ARM POLE BASE.

NOTE:
SUPPORT EXISTING CABINET AND CONTROL EQUIPMENT ABOVE FOUNDATION TO KEEP TRAFFIC SIGNAL FUNCTIONING WHILE FOUNDATION MODIFICATION WORK IS PROCEEDING.

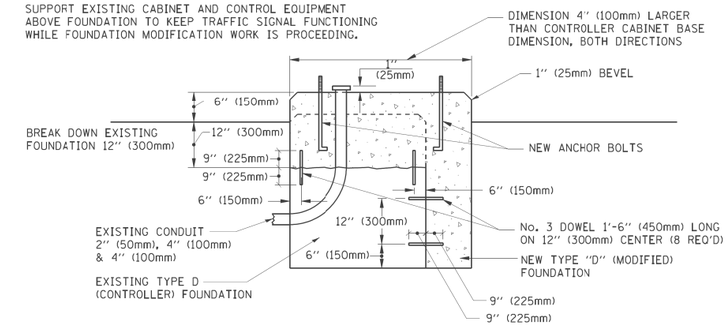

MODIFY EXISTING TYPE "D" FOUNDATION

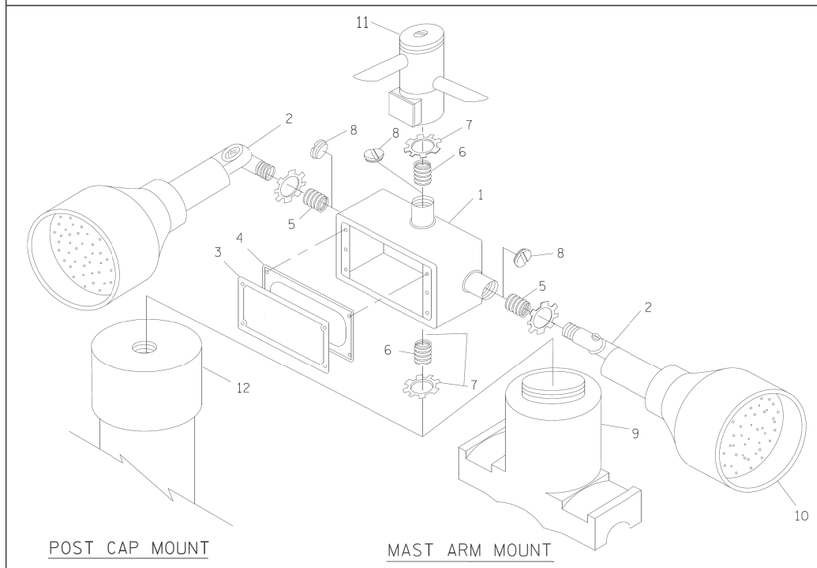

POST CAP MOUNT

MAST ARM MOUNT

EMERGENCY VEHICLE DETECTOR WITH CONFIRMATION BEACON MOUNTING DETAIL

ITEM NO.	IDENTIFICATION
1	OUTLET BOX- GALV. 21 CU.IN. (0.000344 CU-M)
2	LAMP HOLDER AND COVER
3	OUTLET BOX COVER
4	RUBBER COVER GASKET
5	REDUCING BUSHING
6	3/4"(19 mm) CLOSE NIPPLE
7	3/4"(19 mm) LOCKNUT
8	3/4"(19 mm) HOLE PLUG
9	SADDLE BRACKET - GALV.
10	6 WATT PAR 38 LED FLOOD LAMP
11	DETECTOR UNIT
12	POST CAP [18 FT. (5.4 m) POST MIN.]

NOTES:

1. ALL ELECTRICAL ITEMS, EXCEPT ITEMS #2 AND #11 SHALL BE ALUMINUM OR GALVANIZED
2. ITEM #1- OZ/GEDNEY FSX-1-50 OR EQUIVALENT
   ITEM #2- MULBERRY CON-O-SHADE LAMP SHIELD OR EQUIVALENT
   ITEM #9- "BAND-IT" SADDLE BRACKET OR EQUIVALENT
3. WHEN POST MOUNTING IS SPECIFIED, ITEM #9 SHALL NOT BE REQUIRED. THE DETECTION UNIT SHALL BE MOUNTED DIRECTLY ON TOP OF THE CAP BY DRILLING AND TAPPING A 3/4"(19 mm) HOLE WITH PIPE THREADS. THE POST CAP SHALL EITHER BE SCREWED TO THE TOP OF THE POST OR A MINIMUM OF 3 TIGHTENING SCREWS SHALL BE REQUIRED ON EACH CAP.

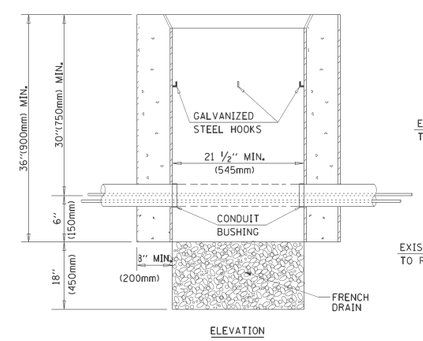

ELEVATION

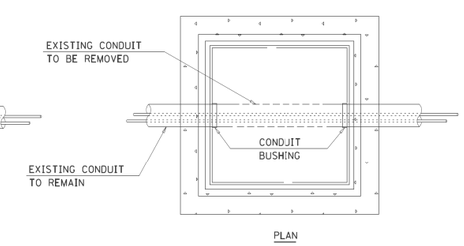

PLAN

NOTES:

1. HANDHOLE CONSTRUCTED PER STATE STANDARD 814001.
2. REMOVAL OF THE EXISTING CONDUIT FROM THE HANDHOLE AND THE INSTALLATION OF THE CONDUIT BUSHINGS SHALL BE INCIDENTAL TO THE HANDHOLE.

HANDHOLE TO INTERCEPT EXISTING CONDUIT

FILE NAME = c:\pw_work\PWIDOT\BAUERDL\d0108315\ts05.dgn	USER NAME = bauerdl	DESIGNED - DAD	REVISED -
		DRAWN - BCK	REVISED -
	PLOT SCALE = 50.0000 ' / IN.	CHECKED - DAD	REVISED -
	PLOT DATE = 11/4/2009	DATE - 10-28-09	REVISED -

STATE OF ILLINOIS
DEPARTMENT OF TRANSPORTATION

DISTRICT ONE
STANDARD TRAFFIC SIGNAL DESIGN DETAILS

SCALE: NONE | SHEET NO. 4 OF 6 SHEETS | STA. | TO STA.

F.A.P. RTE.	SECTION	COUNTY	TOTAL SHEETS	SHEET NO.
330	103R-5	COOK	778	268
	TS-05	CONTRACT NO. 60M62		

FED. ROAD DIST. NO. 1 | ILLINOIS | FED. AID PROJECT

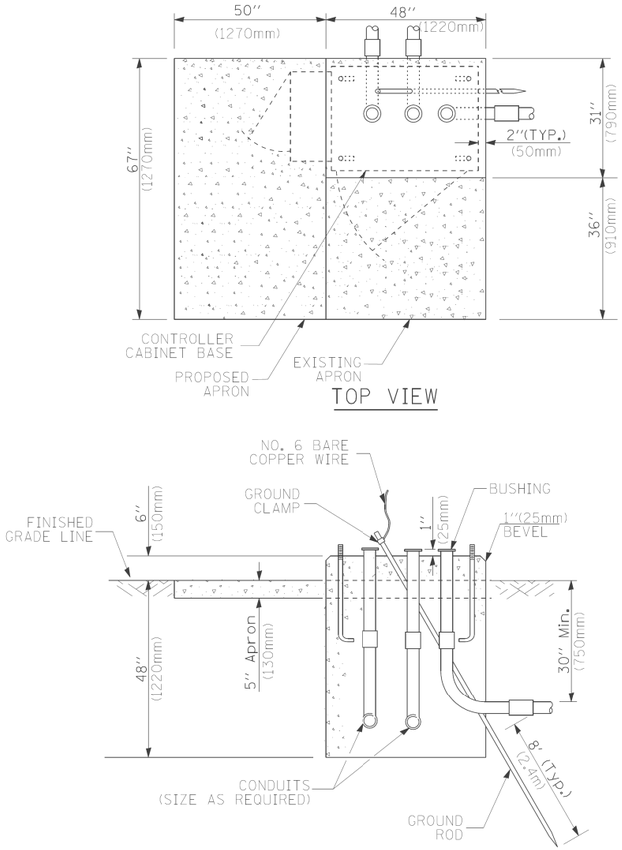

TYPE D
FOR GROUND MOUNTED
CONTROLLER CABINET
AND UPS BATTERY CABINET

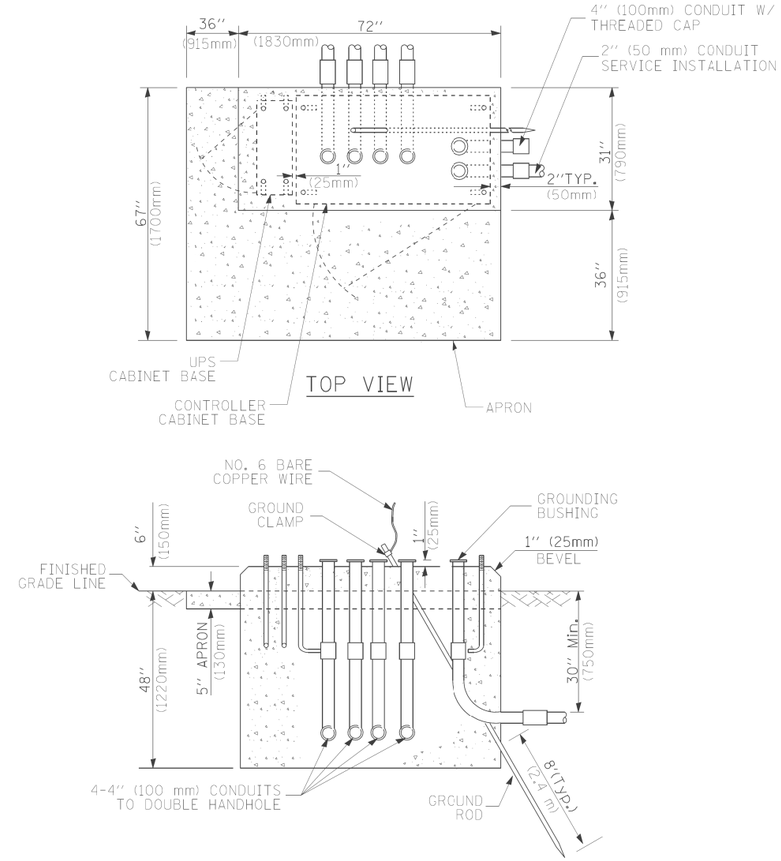

TYPE C
FOR GROUND MOUNTED
CONTROLLER CABINET
AND UPS BATTERY CABINET

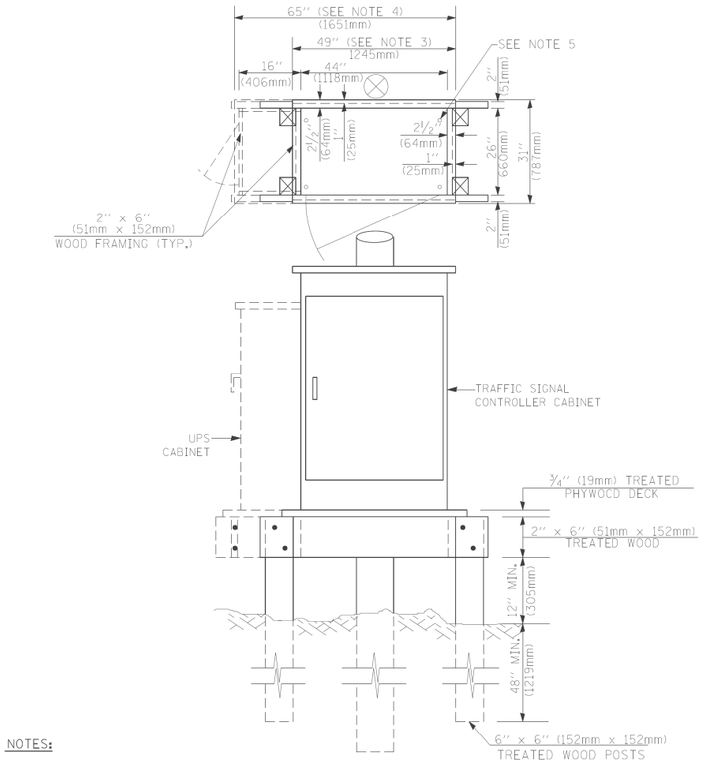

NOTES:

1. BASED ON CONTROLLER CABINET TYPE IV WITH BASE DIMENSIONS OF 26" x 44" (660mm x 1118mm). ADJUST PLATFORM SIZE TO FIT CABINET BASE DIMENSIONS BEING SUPPLIED.
2. BASED ON UNINTERRUPTIBLE POWER SUPPLY CABINET WITH BASE DIMENSIONS OF 16" x 25" (406mm x 635mm). ADJUST PLATFORM SIZE TO FIT CABINET BASE DIMENSIONS BEING SUPPLIED.
3. PLATFORM SIZE FOR CONTROLLER CABINET TYPE IV.
4. PLATFORM SIZE FOR CONTROLLER CABINET TYPE IV AND UNINTERRUPTIBLE POWER SUPPLY CABINET.
5. DRILLED HOLES THROUGH THE PLATFORM BASE TO MATCH THE CONTROLLER CABINET BOLT TEMPLATE. FASTEN THE CONTROLLER CABINET TO THE PLATFORM WITH CARRIAGE BOLTS, WASHERS AND NUTS.
6. FASTEN ALL SUPPORT WOOD FRAMING TO THE WOOD POSTS WITH 2 LAG SCREWS FOR EACH CONNECTION.

TEMPORARY SIGNAL CONTROLLER
WOOD SUPPORT PLATFORM

CABLE SLACK LENGTH	FEET	METER
HANDHOLE	6.5	2.0
DOUBLE HANDHOLE	13.0	4.0
SIGNAL POST	2.0	0.6
MAST ARM	2.0	0.6
CONTROLLER CABINET	1.5	0.5
FIBER OPTIC AT CABINET	13.0	4.0
ELECTRIC SERVICE AT (CABINET OR SERVICE LOCATION)	1.5	0.5
GROUND CABLE (SIGNAL POST, MAST ARM, CABINET)	1.5	0.5
GROUND CABLE (BETWEEN FRAME AND COVER)	5.0	1.6

CABLE SLACK

VERTICAL CABLE LENGTH	FEET	METER
MAST ARM POLE (MAST ARM MOUNTED SIGNAL HEAD) (L = MAST ARM LENGTH - DISTANCE TO SIGNAL HEAD FROM END OF ARM)	20.0+L	6.0+L
BRACKET MOUNTED (MAST ARM POLE OR SIGNAL POLE)	13.0	4.0
PEDESTRIAN PUSH BUTTON	6.0	2.0
SERVICE INSTALLATION POLE MOUNT TO SERVICE DROP	13.5	4.1
SERVICE INSTALLATION POLE MOUNT TO GROUND	13.5	4.1
SERVICE INSTALLATION GROUND MOUNT	6.0	2.0
FOUNDATION (SIGNAL POST, MAST ARM POLE, CONTROLLER CABINET, SERVICE-GROUND MOUNT)	3.0	1.0

VERTICAL CABLE LENGTH

FOUNDATION	DEPTH
TYPE A - Signal Post	4'-0" (1.2m)
TYPE C - CONTROLLER W/ UPS	4'-0" (1.2m)
TYPE D - CONTROLLER	4'-0" (1.2m)
SERVICE INSTALLATION, GROUND MOUNT, TYPE A - SQUARE	4'-0" (1.2m)

DEPTH OF FOUNDATION

Mast Arm Length	① Foundation Depth	Foundation Diameter	Spiral Diameter	Quantity of Rebars	Size of Rebars
Less than 30' (9.1 m)	10'-0" (3.0 m)	30" (750mm)	24" (600mm)	8	6(19)
Greater than or equal to 30' (9.1 m) and less than 40' (12.2 m)	13'-6" (4.1 m)	30" (750mm)	24" (600mm)	8	6(19)
	11'-0" (3.4 m)	36" (900mm)	30" (750mm)	12	7(22)
Greater than or equal to 40' (12.2 m) and less than 50' (15.2 m)	13'-0" (4.0 m)	36" (900mm)	30" (750mm)	12	7(22)
Greater than or equal to 50' (15.2 m) and up to 55' (16.8 m)	15'-0" (4.6 m)	36" (900mm)	30" (750mm)	12	7(22)
Greater than or equal to 56' (16.8 m) and less than 65' (19.8 m)	21'-0" (6.4 m)	42" (1060mm)	36" (900mm)	16	8(25)
Greater than or equal to 65' (19.8 m) and up to 75' (22.9 m)	25'-0" (7.6 m)	42" (1060mm)	36" (900mm)	16	8(25)

NOTES:

1. These foundation depths are for sites which have cohesive soils (clayey silt, sandy clay, etc.) along the length of the shaft, with an average Unconfined Compressive Strength (Qu) > 1.0 tsf (100 kpa). This strength shall be verified by boring data prior to construction or with testing by the Engineer during foundation drilling. The Bureau of Bridges & structures should be contacted for a revised design if other conditions are encountered.
2. Combination mast arm assemblies under 55 feet (16.8 m) shall use 36" (900 mm) diameter foundations.
3. Combination mast arm assemblies under 56 feet (16.8 m) through 75 feet (22.9 m) shall use 42" (1060 mm) diameter foundations.
4. For mast arm assemblies with dual arms refer to state standard 878001.

DEPTH OF MAST ARM FOUNDATIONS, TYPE E

TRAFFIC SIGNAL LEGEND

ITEM	REMOVAL	EXISTING	PROPOSED
CONTROLLER CABINET	R		
RAILROAD CONTROL CABINET		R R	R R
COMMUNICATIONS CABINET	R C C	E C C	C C
MASTER CONTROLLER		EMC	MC
MASTER MASTER CONTROLLER		EMMC	MMC
UNINTERRUPTIBLE POWER SUPPLY	R UPS	EUPS	UPS
SERVICE INSTALLATION, (P) POLE OR (G) GROUND MOUNT	R	P	P
TELEPHONE CONNECTION (P) POLE OR (G) GROUND MOUNT	R T	P T	P T
STEEL MAST ARM ASSEMBLY AND POLE	R		
ALUMINUM MAST ARM ASSEMBLY AND POLE	R		
STEEL COMBINATION MAST ARM ASSEMBLY AND POLE WITH LUMINAIRE	R		
STEEL COMBINATION MAST ARM ASSEMBLY AND POLE WITH PTZ CAMERA	R PTZ	PTZ	PTZ
SIGNAL POST	R		
TEMPORARY WOOD POLE (CLASS 5 OR BETTER) 45 FOOT (13.7m) MINIMUM	R		
GUY WIRE	R		
SIGNAL HEAD	R		
SIGNAL HEAD CONSTRUCTION STAGES (NUMBERS INDICATE THE CONSTRUCTION STAGE)			2
SIGNAL HEAD WITH BACKPLATE	R		
SIGNAL HEAD OPTICALLY PROGRAMMED	R "P"	"P"	"P"
FLASHER INSTALLATION (S DENOTES SOLAR POWER)	R "F"	"F"	"F"
PEDESTRIAN SIGNAL HEAD	R		
PEDESTRIAN PUSHBUTTON DETECTOR	R		
ACCESSIBLE PEDESTRIAN PUSHBUTTON DETECTOR	R APS	APS	APS
ILLUMINATED SIGN "NO LEFT TURN"	R		
ILLUMINATED SIGN "NO RIGHT TURN"	R		
DETECTOR LOOP, TYPE I			
PREFORMED DETECTOR LOOP		P	P
MICROWAVE VEHICLE SENSOR	R M	M	M
VIDEO DETECTION CAMERA	R V	V	V
VIDEO DETECTION ZONE			
PAN, TILT, ZOOM CAMERA	R PTZ	PTZ	PTZ
WIRELESS DETECTOR SENSOR	R W	W	W
WIRELESS ACCESS POINT	R		

ITEM	REMOVAL	EXISTING	PROPOSED
EMERGENCY VEHICLE LIGHT DETECTOR	R		
CONFIRMATION BEACON	R		
HANDHOLE	R		
HEAVY DUTY HANDHOLE	R H	H	H
DOUBLE HANDHOLE	R		
JUNCTION BOX	R		
GALVANIZED STEEL CONDUIT IN TRENCH (T) OR PUSHED (P)			
TEMPORARY SPAN WIRE, TETHER WIRE, AND CABLE	R		
COMMON TRENCH			CT
COILABLE NONMETALLIC CONDUIT (EMPTY)			CNC
SYSTEM ITEM		S	S
INTERSECTION ITEM		I	IP
REMOVE ITEM	R		
RELOCATE ITEM	RL		
ABANDON ITEM	A		
12" (300mm) TRAFFIC SIGNAL SECTION		R	R
12" (300mm) RED WITH 8" (200mm) YELLOW AND GREEN TRAFFIC SIGNAL FACE		R Y G	
SIGNAL FACE		R Y G Y G	R Y G Y G
SIGNAL FACE WITH BACKPLATE. "P" INDICATES PROGRAMMED HEAD		R Y G Y G "P"	R Y G Y G "P"
12" (300mm) PEDESTRIAN SIGNAL HEAD WALK/DON'T WALK SYMBOL		DW W	
12" (300mm) PEDESTRIAN SIGNAL HEAD INTERNATIONAL SYMBOL, OUTLINED			
12" (300mm) PEDESTRIAN SIGNAL HEAD INTERNATIONAL SYMBOL, SOLID			
PEDESTRIAN SIGNAL HEAD, INTERNATIONAL SYMBOL, WITH COUNTDOWN TIMER		C D	C D
RADIO INTERCONNECT	R		
RADIO REPEATER	R ERR	ERR	RR
DENOTES NUMBER OF CONDUCTORS, ELECTRIC CABLE NO. 14, UNLESS NOTED OTHERWISE, ALL DETECTOR LOOP CABLE TO BE SHIELDED		5	5
GROUND CABLE IN CONDUIT NO. 6 SOLID COPPER (GREEN)		1	1

ITEM	REMOVAL	EXISTING	PROPOSED
ELECTRIC CABLE IN CONDUIT, TRACER, NO. 14 1/C, UNLESS NOTED OTHERWISE		1	1
COAXIAL CABLE		C	C
VENDOR CABLE FOR CAMERA		V	V
COPPER INTERCONNECT CABLE, NO. 18 3 PAIR TWISTED, SHIELDED		6	6
FIBER OPTIC CABLE NO. 62.5/125, MM12F		12F	
FIBER OPTIC CABLE NO. 62.5/125, MM12F SM12F		24F	24F
FIBER OPTIC CABLE NO. 62.5/125, (NUMBER OF FIBERS & TYPE TO BE NOTED ON PLANS)			
GROUND ROD AT (C) CONTROLLER, (H) HANDHOLE, (P) POST, (M) MAST ARM, OR (S) SERVICE		C	C
CONTROLLER CABINET AND FOUNDATION TO BE REMOVED	RCF		
STEEL MAST ARM POLE AND FOUNDATION TO BE REMOVED	RMF		
ALUMINUM MAST ARM POLE AND FOUNDATION TO BE REMOVED	RMF		
STEEL COMBINATION MAST ARM ASSEMBLY AND POLE WITH LUMINAIRE AND FOUNDATION TO BE REMOVED	RMF		
SIGNAL POST AND FOUNDATION TO BE REMOVED	RMF		
INTERSECTION & SAMPLING (SYSTEM) DETECTOR		IS	IS
SAMPLING (SYSTEM) DETECTOR		S	S
EXISTING INTERSECTION LOOP DETECTOR PROPOSED INTERSECTION AND SAMPLING (SYSTEM) DETECTOR		P	
EXISTING PREFORMED INTERSECTION LOOP DETECTOR PROPOSED INTERSECTION AND SAMPLING (SYSTEM) DETECTOR		PP	
PREFORMED INTERSECTION AND SAMPLING (SYSTEM) DETECTOR		PIS	PIS
PREFORMED SAMPLING (SYSTEM) DETECTOR		PS	PS

RAILROAD SYMBOLS

	EXISTING	PROPOSED
RAILROAD CONTROL CABINET	R R	R R
RAILROAD CANTILEVER MAST ARM		
FLASHING SIGNAL		
CROSSING GATE		
CROSSBUCK		

FILE NAME = c:\pw_work\PWIDOT\BAUERDL\d0128315\ts05.dgn	USER NAME = bauerdl	DESIGNED - DAG/BCK	REVISED -
		DRAWN - BCK	REVISED -
	PLOT SCALE = 50.0000 ' / IN.	CHECKED - DAD	REVISED -
	PLOT DATE = 11/4/2009	DATE - 10-28-09	REVISED -

STATE OF ILLINOIS
DEPARTMENT OF TRANSPORTATION

DISTRICT ONE
STANDARD TRAFFIC SIGNAL DESIGN DETAILS

SCALE: NONE | SHEET NO. 6 OF 6 SHEETS | STA. TO STA.

F.A.P. RTE.	SECTION	COUNTY	TOTAL SHEETS	SHEET NO.
330	103R-5	COOK	778	270
	TS-05	CONTRACT NO. 60M62		

FED. ROAD DIST. NO. 1 | ILLINOIS | FED. AID PROJECT

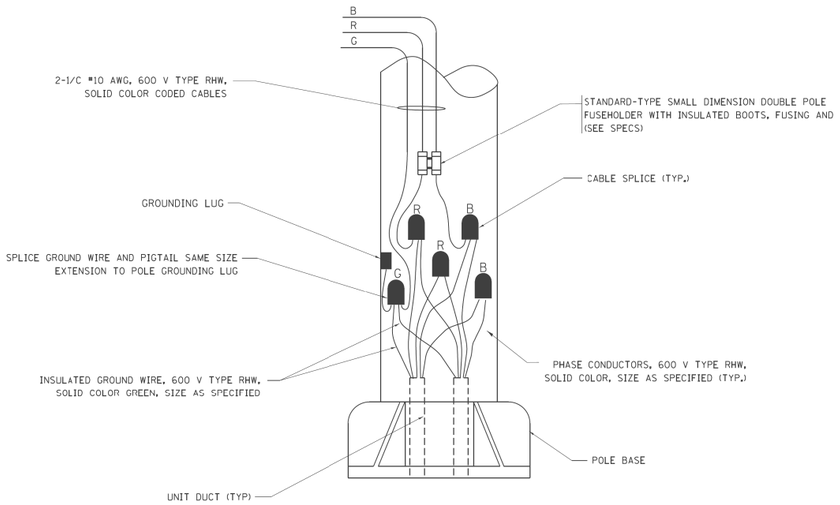

POLE WIRING DETAIL

(NOT TO SCALE)

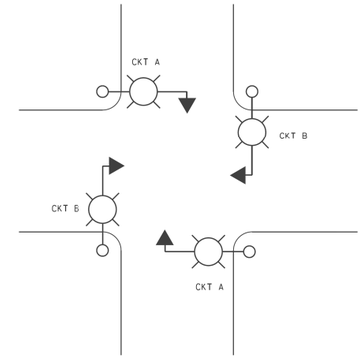

TYPICAL LIGHTING LAYOUT

(NOT TO SCALE)

PANEL EQUIPMENT

BILL OF MATERIALS

ITEM	QUANTITY	DESCRIPTION
A	1	CIRCUIT BREAKER, THERMAL MAGNETIC MOLDED CASE, 2 POLE, 240 VOLT 100 AMP FRAME, 30 AMP TRIP, INTERRUPTING RATING 22K RMS SYMETRICALL AMP
B	1	REMOTE CONTROL SWITCH, ELECTRICALLY OPERATED, MECHANICALLY HELD, 2 POLE, SINGLE THROW, 30 AMP., 600 VOLTS CONTROL CIRCUIT 120 VOLT.
C	2	CIRCUIT BREAKERS, 2 POLE, 100 AMP. FRAME 20 AMP. NON-INTERCHANGABLE TRIP INTERUPTING RATING NEMA 10,000 AMP AT 240 V.
D	1	CONTROL CIRCUIT-CIRCUIT BREAKER, 1 POLE, 100 AMP FRAME, 15 AMP NON-INTERCHANGABLE TRIP, INTERRUPTING RATING 22K RMS SYMETRICAL AMP AT 240V.
E	1	ASTRONOMIC MICROPROCESSOR-BASED 2-CHANNEL CONTROLLER [TIME SWITCH]
F	1	H-O-A SWITCH
G	1	COPPER GROUND BUS 1/4" (6.35) X 1" (25.4) X 12" (304.8 mm) LONG MOUNTED ON PANEL WITH LUGS AND 4 SPARE LUGS
H	1	COPPER NEUTRAL BUS 1/4" (6.35) X 1" (25.4) X 12" (304.8 mm) LONG MOUNTED ON PANEL WITH LUGS AND 4 SPARE LUGS
I	1	RELAY, 2 POLE, SINGLE THROW, 120 VOLT COIL, CURRENT RATING TO BE COORDINATED WITH CONTACTOR
J	2	TERMINAL BLOCK

NOTES:

1. ALL WIRING RELATED TO THE LIGHTIGN CONTROLS SHALL BE #10 AWG, 600V, TYPE SWITCH BOARD WIRE, STRANDED COPPER.
2. PROVIDE SEALING GROMMETS FOR ALL OPEN WIRING EXTENDED FROM DEVICES IN BOXES OR CABINETS WITHIN THE ENCLOSURE.
3. ALL WIRING SHALL BE NEATLY DRESSED, IDENTIFIED BY TAGS, AND SUPPORTED.
4. ALL SPLICES AND CONNECTIONS FOR ROADWAY LIGHTING SHALL BE AT POLE BASE ONLY. UNDERGROUND SPLICING OF LIGHTING CONDUCTORS IS NOT PERMITTED.
5. THE COMBINATION POLE LIGHTING CABLING DETAIL IS INTENDED TO SHOW CONNECTIONS ONLY. FOR FURTHER INFORMATION ON THE COMBINATION LIGHT POLE, THE TRAFFIC SIGNAL CONTROL CABINET, AND THE SERVICE DISCONNECT BOX REFER TO THE RESPECTIVE DETAIL DRAWINGS.
6. COMBINATION LIGHTING SHALL BE TIMED TO ENERGIZE 20 MINUTES PRIOR TO DUSK AND SHALL BE TIMED TO DE-ENERGIZE 20 MINUTES AFTER TO DAWN.
7. COMBINATION LIGHTING CONTROLLER AND ALL COMBINATION POLES SHALL HAVE IDOT DESIGNATIONS AND IDOT LABELS. LIGHTING CONTROLER DESIGNATIONS SHALL BE COORDINATED WITH THE BUREAU OF TRAFFIC - LIGHTING SECTION.

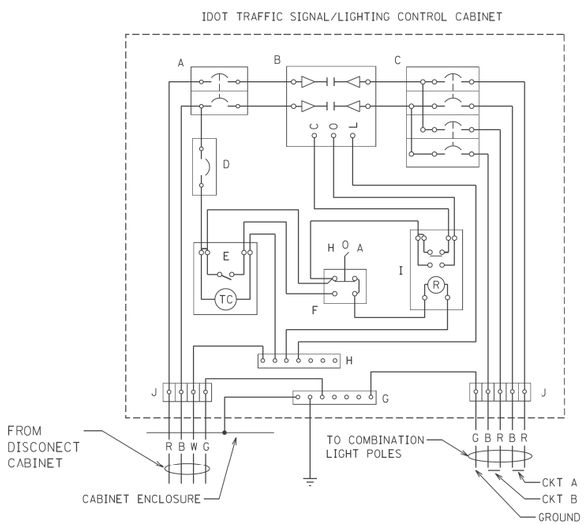

COMBINATION LIGHTING CONTROLLER WIRING DIAGRAM

(NOT TO SCALE)

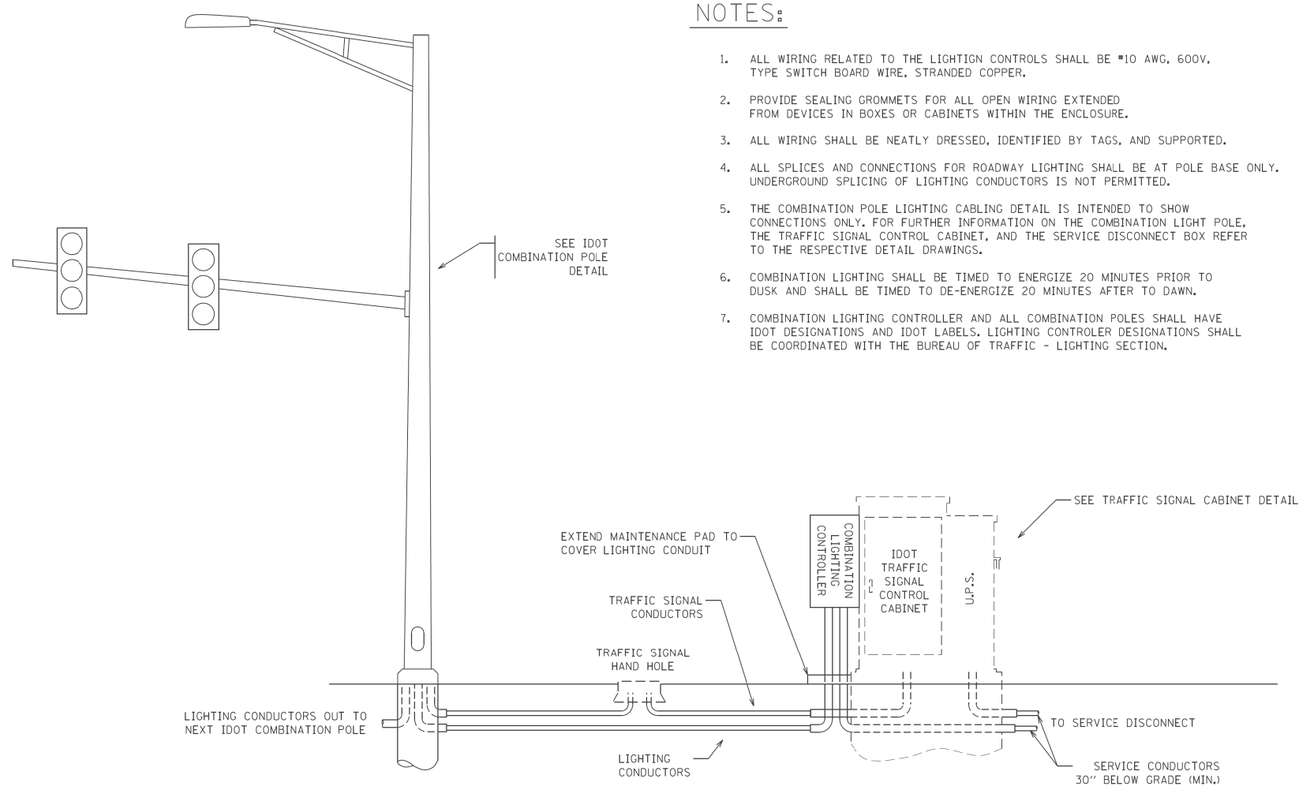

COMBINATION POLE LIGHTING CABLING - TYPICAL

(NOT TO SCALE)

FILE NAME = c:\pw_work\pwidot\poulterma\d0206851\PiggyBackController.dgn	USER NAME = poulterma	DESIGNED - MP	REVISED - MAP 9/20/11	STATE OF ILLINOIS DEPARTMENT OF TRANSPORTATION	COMBINATION LIGHTING CONTROLLER	F.A.P RTE. 330	SECTION 103R-5	COUNTY COOK	TOTAL SHEETS 778	SHEET NO. 271
		DRAWN - MP	REVISED -					CONTRACT NO. 60M62		
	PLOT SCALE = 50.0000 ' / in.	CHECKED -	REVISED -			ILLINOIS FED. AID PROJECT				
	PLOT DATE = 9/20/2011	DATE - 8/24/11	REVISED -		SCALE: NTS SHEET NO. 1 OF 1 SHEETS STA. TO STA.					

NOTES FOR TEMPORARY TRAFFIC SIGNAL:

1. ALL CONTROL EQUIPMENT SUCH AS COMMUNICATION DEVICES FOR THE TEMPORARY TRAFFIC SIGNAL(S) SHALL BE FURNISHED BY THE CONTRACTOR.

2. ONLY CONTROLLERS SUPPLIED BY ONE OF THE DISTRICT APPROVED CLOSED LOOP EQUIPMENT MANUFACTURERS WILL BE APPROVED FOR USE AT TEMPORARY SIGNAL LOCATIONS. ALL CONTROLLERS USED FOR TEMPORARY TRAFFIC SIGNALS SHALL BE FULLY ACTUATED NEMA MICROPROCESSOR BASED WITH RS232 DATA ENTRY PORTS COMPATIBLE WITH EXISTING MONITORING SOFTWARE APPROVED BY IDOT DISTRICT 1, INSTALLED IN A NEMA TS2 CABINET. ONLY ONE BRAND OF CONTROLLER WILL BE ACCEPTED FOR ANY ONE CONTRACT.

3. ALL TRAFFIC SIGNAL SECTIONS AND PEDESTRIAN SIGNAL SECTIONS SHALL BE LED AND 12" (300mm) DIAMETER. HEADS SHALL BE PLACED AS INDICATED ON THE TEMPORARY TRAFFIC SIGNAL PLAN OR AS DIRECTED BY THE ENGINEER. PEDESTRIAN SIGNALS SHALL INCLUDE SOLID INTERNATIONAL SYMBOLS. PEDESTRIAN SIGNALS WITH COUNTDOWN TIMERS SHALL BE USED WHEN THE EXISTING INSTALLATION UTILIZES COUNTDOWN TYPE OR AS DIRECTED BY THE ENGINEER. COUNTDOWN TYPE PEDESTRIAN SIGNALS ARE NOT TO BE INSTALLED AT A RAILROAD INTERSECTION. THE CONTRACTOR SHALL FURNISH ENOUGH CABLE SLACK TO RELOCATE HEADS TO ANY POSITION ON THE SPAN WIRE OR AT LOCATIONS ILLUSTRATED ON THE PLANS FOR CONSTRUCTION STAGING. THE TEMPORARY TRAFFIC SIGNAL SHALL REMAIN IN OPERATION DURING ALL SIGNAL HEAD RELOCATIONS. EACH TEMPORARY TRAFFIC SIGNAL HEAD SHALL HAVE ITS OWN CABLE FROM THE CONTROLLER CABINET TO THE SIGNAL HEAD.

4. ALL EXISTING STREET NAME AND INTERSECTION REGULATORY SIGNS SHALL BE REMOVED FROM EXISTING POLES, RELOCATED AND SECURELY FASTENED TO THE SPAN WIRE OR WOOD POLE AS DIRECTED BY THE ENGINEER.

5. ANY TEMPORARY SIGNAL WITHIN AN EXISTING CLOSED LOOP TRAFFIC SIGNAL SYSTEM SHALL BE INTERCONNECTED TO THAT SYSTEM USING SIMILAR BRAND CONTROL EQUIPMENT.

RESTORATION OF WORK AREA. RESTORATION OF THE TRAFFIC SIGNAL WORK AREA SHALL BE INCIDENTAL TO THE RELATED PAY ITEM SUCH AS FOUNDATION, CONDUIT, HANDHOLE, TRENCH AND BACKFILL, ETC., AND NO EXTRA COMPENSATION SHALL BE ALLOWED. ALL ROADWAY SURFACES SUCH AS SHOULDERS, MEDIANS, SIDEWALKS, PAVEMENT, ETC. SHALL BE REPLACED IN KIND. ALL DAMAGE TO MOWED LAWNS SHALL BE REPLACED WITH AN APPROVED SOD, AND ALL DAMAGE TO UNMOWED FIELDS SHALL BE SEEDED IN ACCORDANCE WITH STANDARD SPECIFICATIONS 252 AND 250 RESPECTIVELY.

NOTE:
THE TRAFFIC SIGNAL CONTROLLER EQUIPMENT FOR THIS PROJECT SHALL BE "EAGLE" TO MATCH THE EXISTING ADJACENT SYSTEM.

CONSTRUCTION NOTES:

1. ANY TEMPORARY TRAFFIC SIGNAL SECTIONS NOT IN USE DURING A STAGE OF CONSTRUCTION SHALL BE BAGGED AND DEACTIVATED. SEE CABLE PLANS FOR MORE DETAILS.

2. ALL VIDEO DETECTION ZONES ARE TO BE REDEFINED DURING EACH STAGE OF CONSTRUCTION AND ARE INCLUDED IN THE COST OF THE TEMPORARY TRAFFIC SIGNAL INSTALLATION.

3. TEMPORARY RADIO INTERCONNECT SHALL NOT BE REMOVED UNTIL FIBER INTERCONNECT TO HS ENTRANCE/SOUTHMOOR DRIVE IS INSTALLED AND OPERATIONAL.

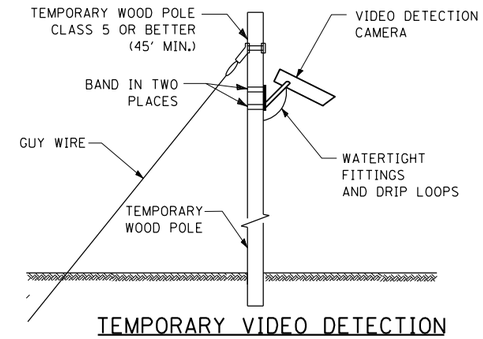

TEMPORARY VIDEO DETECTION MOUNTING DETAIL
(NOT TO SCALE)

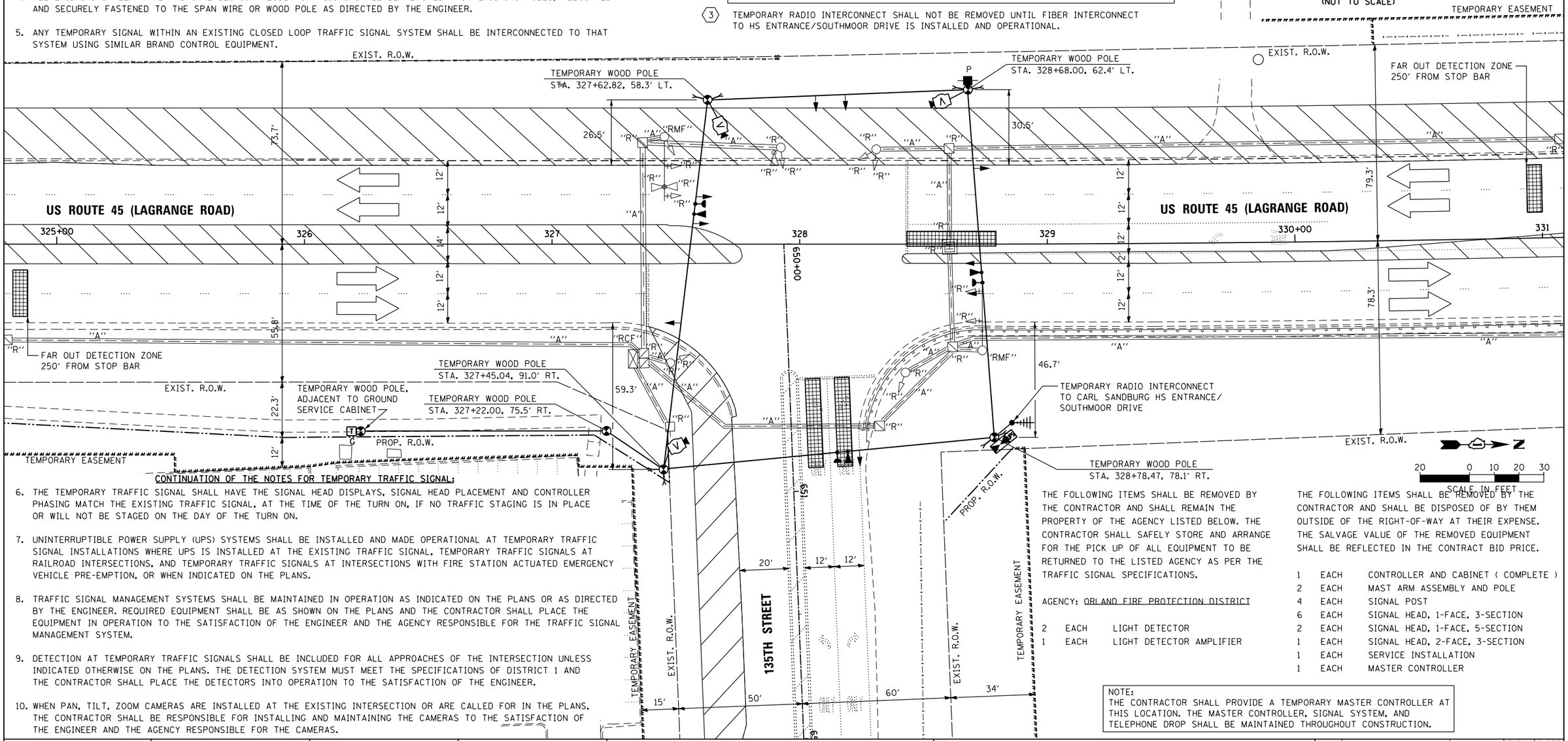

CONTINUATION OF THE NOTES FOR TEMPORARY TRAFFIC SIGNAL:

6. THE TEMPORARY TRAFFIC SIGNAL SHALL HAVE THE SIGNAL HEAD DISPLAYS, SIGNAL HEAD PLACEMENT AND CONTROLLER PHASING MATCH THE EXISTING TRAFFIC SIGNAL, AT THE TIME OF THE TURN ON, IF NO TRAFFIC STAGING IS IN PLACE OR WILL NOT BE STAGED ON THE DAY OF THE TURN ON.

7. UNINTERRUPTIBLE POWER SUPPLY (UPS) SYSTEMS SHALL BE INSTALLED AND MADE OPERATIONAL AT TEMPORARY TRAFFIC SIGNAL INSTALLATIONS WHERE UPS IS INSTALLED AT THE EXISTING TRAFFIC SIGNAL, TEMPORARY TRAFFIC SIGNALS AT RAILROAD INTERSECTIONS, AND TEMPORARY TRAFFIC SIGNALS AT INTERSECTIONS WITH FIRE STATION ACTUATED EMERGENCY VEHICLE PRE-EMPTION, OR WHEN INDICATED ON THE PLANS.

8. TRAFFIC SIGNAL MANAGEMENT SYSTEMS SHALL BE MAINTAINED IN OPERATION AS INDICATED ON THE PLANS OR AS DIRECTED BY THE ENGINEER. REQUIRED EQUIPMENT SHALL BE AS SHOWN ON THE PLANS AND THE CONTRACTOR SHALL PLACE THE EQUIPMENT IN OPERATION TO THE SATISFACTION OF THE ENGINEER AND THE AGENCY RESPONSIBLE FOR THE TRAFFIC SIGNAL MANAGEMENT SYSTEM.

9. DETECTION AT TEMPORARY TRAFFIC SIGNALS SHALL BE INCLUDED FOR ALL APPROACHES OF THE INTERSECTION UNLESS INDICATED OTHERWISE ON THE PLANS. THE DETECTION SYSTEM MUST MEET THE SPECIFICATIONS OF DISTRICT 1 AND THE CONTRACTOR SHALL PLACE THE DETECTORS INTO OPERATION TO THE SATISFACTION OF THE ENGINEER.

10. WHEN PAN, TILT, ZOOM CAMERAS ARE INSTALLED AT THE EXISTING INTERSECTION OR ARE CALLED FOR IN THE PLANS, THE CONTRACTOR SHALL BE RESPONSIBLE FOR INSTALLING AND MAINTAINING THE CAMERAS TO THE SATISFACTION OF THE ENGINEER AND THE AGENCY RESPONSIBLE FOR THE CAMERAS.

THE FOLLOWING ITEMS SHALL BE REMOVED BY THE CONTRACTOR AND SHALL REMAIN THE PROPERTY OF THE AGENCY LISTED BELOW. THE CONTRACTOR SHALL SAFELY STORE AND ARRANGE FOR THE PICK UP OF ALL EQUIPMENT TO BE RETURNED TO THE LISTED AGENCY AS PER THE TRAFFIC SIGNAL SPECIFICATIONS.

AGENCY: ORLAND FIRE PROTECTION DISTRICT

2	EACH	LIGHT DETECTOR
1	EACH	LIGHT DETECTOR AMPLIFIER

THE FOLLOWING ITEMS SHALL BE REMOVED BY THE CONTRACTOR AND SHALL BE DISPOSED OF BY THEM OUTSIDE OF THE RIGHT-OF-WAY AT THEIR EXPENSE. THE SALVAGE VALUE OF THE REMOVED EQUIPMENT SHALL BE REFLECTED IN THE CONTRACT BID PRICE.

1	EACH	CONTROLLER AND CABINET (COMPLETE)
2	EACH	MAST ARM ASSEMBLY AND POLE
4	EACH	SIGNAL POST
6	EACH	SIGNAL HEAD, 1-FACE, 3-SECTION
2	EACH	SIGNAL HEAD, 1-FACE, 5-SECTION
1	EACH	SIGNAL HEAD, 2-FACE, 3-SECTION
1	EACH	SERVICE INSTALLATION
1	EACH	MASTER CONTROLLER

NOTE:
THE CONTRACTOR SHALL PROVIDE A TEMPORARY MASTER CONTROLLER AT THIS LOCATION. THE MASTER CONTROLLER, SIGNAL SYSTEM, AND TELEPHONE DROP SHALL BE MAINTAINED THROUGHOUT CONSTRUCTION.

URS
100 S. WACKER DR.
SUITE 500
CHICAGO, IL 60606
TEL (312)939-1000
FAX (312)939-498

FILE NAME = D160M62-SHT-TD01.dgn	USER NAME = Anthony.Plutz	DESIGNED - MRF	REVISED -
		DRAWN - MRF	REVISED -
	PLOT SCALE = 40.0000 ' / in.	CHECKED - MJL	REVISED -
SHT_PLAN	PLOT DATE = 3/13/2013	DATE - 03/13/13	REVISED -

STATE OF ILLINOIS
DEPARTMENT OF TRANSPORTATION

TEMPORARY TRAFFIC SIGNAL INSTALLATION AND REMOVE EXISTING TRAFFIC SIGNAL EQUIPMENT PLAN – PRE-STAGE
US 45 (LAGRANGE ROAD) AND 135TH STREET

SCALE: 1"=20' | SHEET 1 OF 6 SHEETS | STA. TO STA.

F.A.P RTE.	SECTION	COUNTY	TOTAL SHEETS	SHEET NO.
330	103R-5	COOK	778	272
	TD-01	CONTRACT NO. 60M62		
		ILLINOIS FED. AID PROJECT		

RESTORATION OF WORK AREA, RESTORATION OF THE TRAFFIC SIGNAL WORK AREA SHALL BE INCIDENTAL TO THE RELATED PAY ITEM SUCH AS FOUNDATION, CONDUIT, HANDHOLE, TRENCH AND BACKFILL, ETC., AND NO EXTRA COMPENSATION SHALL BE ALLOWED. ALL ROADWAY SURFACES SUCH AS SHOULDERS, MEDIANS, SIDEWALKS, PAVEMENT, ETC. SHALL BE REPLACED IN KIND. ALL DAMAGE TO MOWED LAWNS SHALL BE REPLACED WITH AN APPROVED SOD, AND ALL DAMAGE TO UNMOWED FIELDS SHALL BE SEEDED IN ACCORDANCE WITH STANDARD SPECIFICATIONS 252 AND 250 RESPECTIVELY.

NOTE:
THE TRAFFIC SIGNAL CONTROLLER EQUIPMENT FOR THIS PROJECT SHALL BE "EAGLE" TO MATCH THE EXISTING ADJACENT SYSTEM.

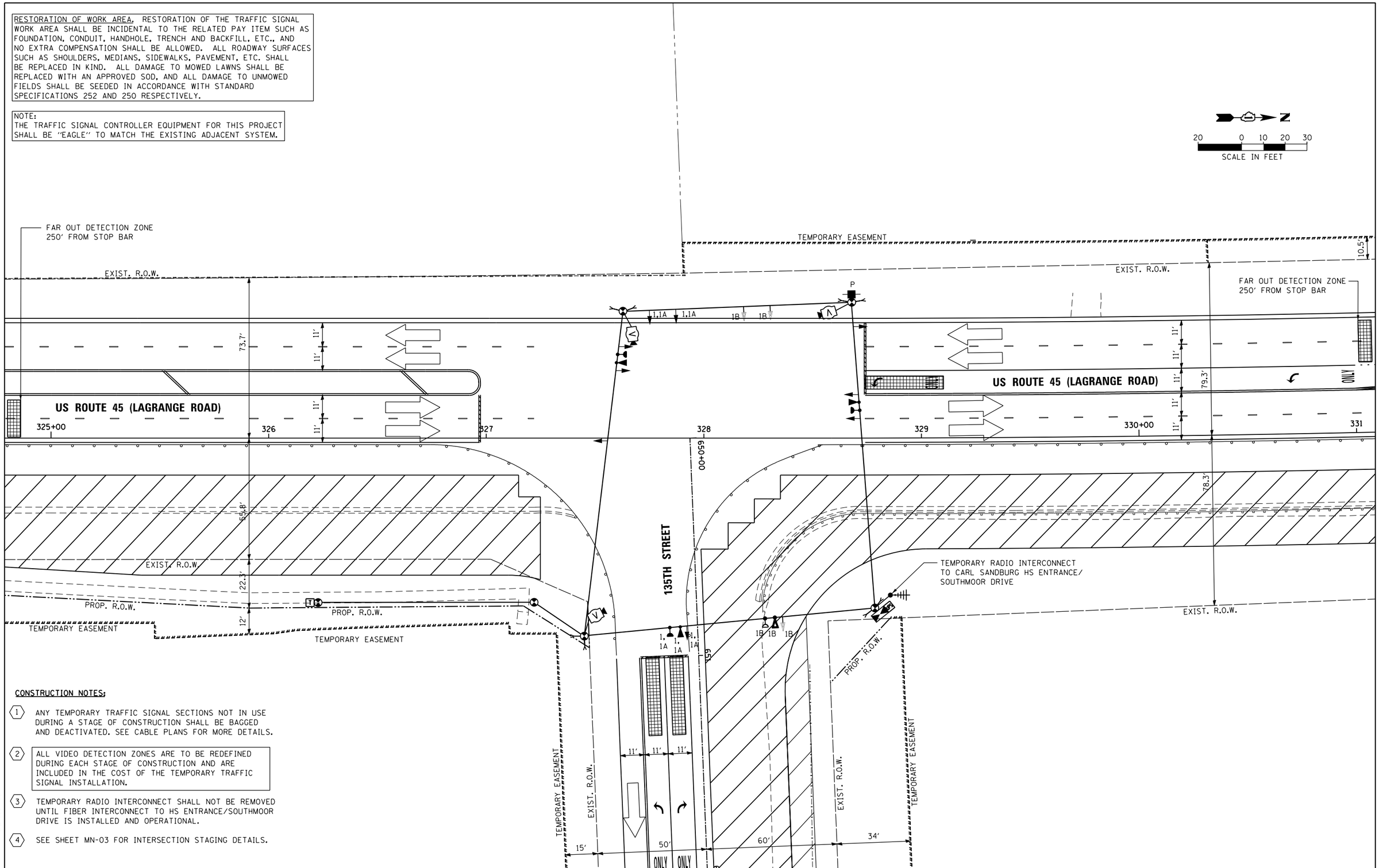

CONSTRUCTION NOTES:

1. ANY TEMPORARY TRAFFIC SIGNAL SECTIONS NOT IN USE DURING A STAGE OF CONSTRUCTION SHALL BE BAGGED AND DEACTIVATED. SEE CABLE PLANS FOR MORE DETAILS.
2. ALL VIDEO DETECTION ZONES ARE TO BE REDEFINED DURING EACH STAGE OF CONSTRUCTION AND ARE INCLUDED IN THE COST OF THE TEMPORARY TRAFFIC SIGNAL INSTALLATION.
3. TEMPORARY RADIO INTERCONNECT SHALL NOT BE REMOVED UNTIL FIBER INTERCONNECT TO HS ENTRANCE/SOUTHMOOR DRIVE IS INSTALLED AND OPERATIONAL.
4. SEE SHEET MN-03 FOR INTERSECTION STAGING DETAILS.

URS
100 S. WACKER DR.
SUITE 500
CHICAGO IL 60606
TEL (312)939-1000
FAX (312)939-4198

FILE NAME = D160M62-SHT-TD02.dgn	USER NAME = Anthony.Plutz	DESIGNED - MRF	REVISED -
		DRAWN - MRF	REVISED -
	PLOT SCALE = 40.0000 ' / in.	CHECKED - MJL	REVISED -
SHT_PLAN	PLOT DATE = 3/13/2013	DATE - 03/13/13	REVISED -

STATE OF ILLINOIS
DEPARTMENT OF TRANSPORTATION

TEMPORARY TRAFFIC SIGNAL INSTALLATION – STAGE 1
US 45 (LAGRANGE ROAD) AND 135TH STREET

SCALE: 1"=20' | SHEET 2 OF 6 SHEETS | STA. TO STA.

F.A.P RTE.	SECTION	COUNTY	TOTAL SHEETS	SHEET NO.
330	103R-5	COOK	778	273
	TD-02	CONTRACT NO. 60M62		
		ILLINOIS FED. AID PROJECT		

RESTORATION OF WORK AREA, RESTORATION OF THE TRAFFIC SIGNAL WORK AREA SHALL BE INCIDENTAL TO THE RELATED PAY ITEM SUCH AS FOUNDATION, CONDUIT, HANDHOLE, TRENCH AND BACKFILL, ETC., AND NO EXTRA COMPENSATION SHALL BE ALLOWED. ALL ROADWAY SURFACES SUCH AS SHOULDERS, MEDIANS, SIDEWALKS, PAVEMENT, ETC. SHALL BE REPLACED IN KIND. ALL DAMAGE TO MOWED LAWNS SHALL BE REPLACED WITH AN APPROVED SOD, AND ALL DAMAGE TO UNMOWED FIELDS SHALL BE SEEDED IN ACCORDANCE WITH STANDARD SPECIFICATIONS 252 AND 250 RESPECTIVELY.

NOTE:
THE TRAFFIC SIGNAL CONTROLLER EQUIPMENT FOR THIS PROJECT SHALL BE "EAGLE" TO MATCH THE EXISTING ADJACENT SYSTEM.

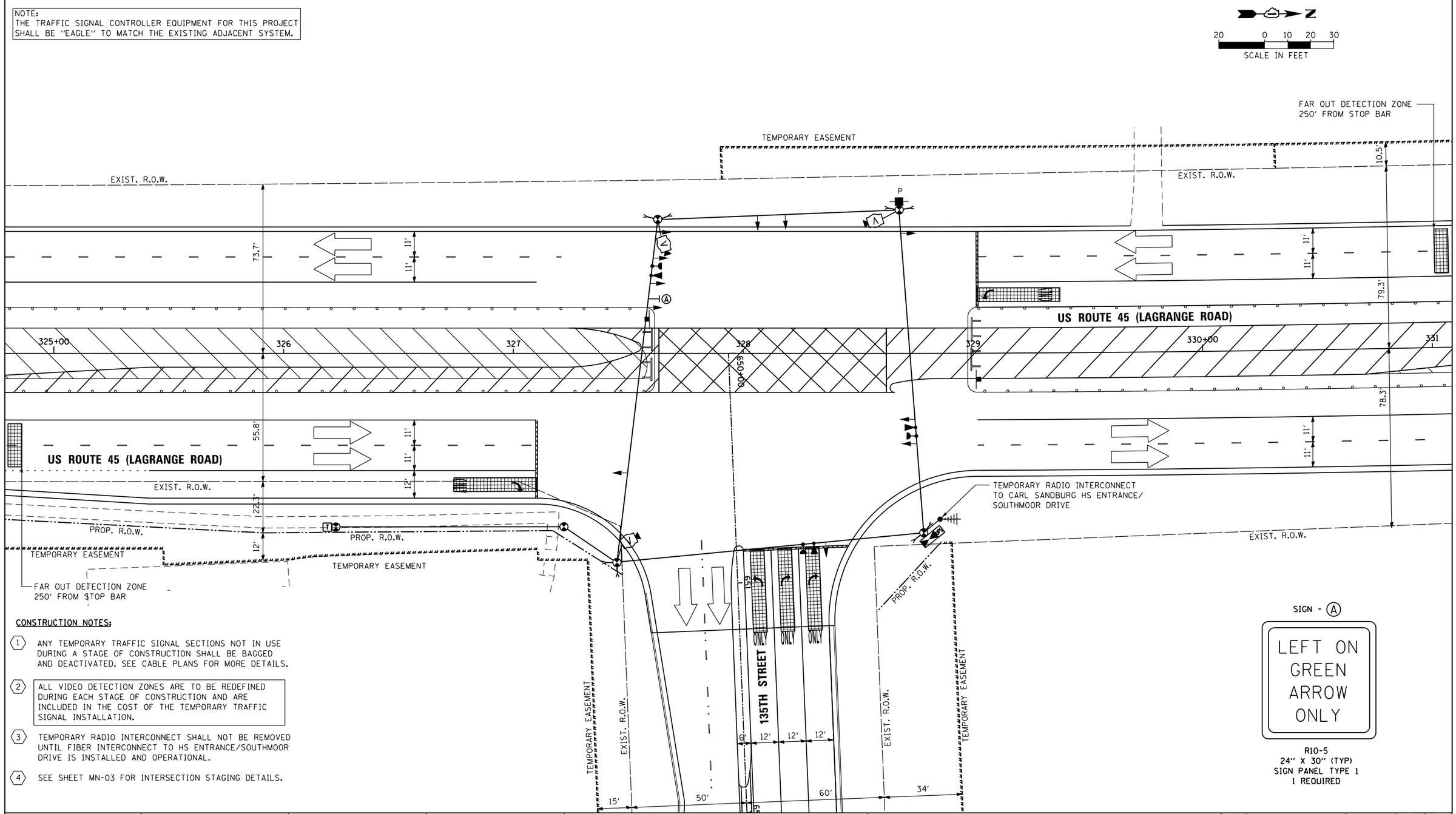

CONSTRUCTION NOTES:

1. ANY TEMPORARY TRAFFIC SIGNAL SECTIONS NOT IN USE DURING A STAGE OF CONSTRUCTION SHALL BE BAGGED AND DEACTIVATED. SEE CABLE PLANS FOR MORE DETAILS.
2. ALL VIDEO DETECTION ZONES ARE TO BE REDEFINED DURING EACH STAGE OF CONSTRUCTION AND ARE INCLUDED IN THE COST OF THE TEMPORARY TRAFFIC SIGNAL INSTALLATION.
3. TEMPORARY RADIO INTERCONNECT SHALL NOT BE REMOVED UNTIL FIBER INTERCONNECT TO HS ENTRANCE/SOUTHMOOR DRIVE IS INSTALLED AND OPERATIONAL.
4. SEE SHEET MN-03 FOR INTERSECTION STAGING DETAILS.

SIGN - (A)

LEFT ON
GREEN
ARROW
ONLY

R10-5
24" X 30" (TYP)
SIGN PANEL TYPE 1
1 REQUIRED

URS
100 S. WACKER DR.
SUITE 500
CHICAGO, IL 60606
TEL (312)-939-1000
FAX (312)-939-9498

FILE NAME = D160M62-SHT-TD03.dgn	USER NAME = Anthony.Plutz	DESIGNED - MRF	REVISED -	STATE OF ILLINOIS DEPARTMENT OF TRANSPORTATION	TEMPORARY TRAFFIC SIGNAL INSTALLATION – STAGE 2 US 45 (LAGRANGE ROAD) AND 135TH STREET
		DRAWN - MRF	REVISED -		
	PLOT SCALE = 40.0000 ' / in.	CHECKED - MJL	REVISED -		
SHT_PLAN	PLOT DATE = 3/13/2013	DATE - 03/13/13	REVISED -		SCALE: 1"=20' SHEET 3 OF 6 SHEETS STA. TO STA.

F.A.P RTE.	SECTION	COUNTY	TOTAL SHEETS	SHEET NO.
330	103R-5	COOK	778	274
	TD-03	CONTRACT NO. 60M62		
		ILLINOIS FED. AID PROJECT		

RESTORATION OF WORK AREA, RESTORATION OF THE TRAFFIC SIGNAL WORK AREA SHALL BE INCIDENTAL TO THE RELATED PAY ITEM SUCH AS FOUNDATION, CONDUIT, HANDHOLE, TRENCH AND BACKFILL, ETC., AND NO EXTRA COMPENSATION SHALL BE ALLOWED. ALL ROADWAY SURFACES SUCH AS SHOULDERS, MEDIANS, SIDEWALKS, PAVEMENT, ETC. SHALL BE REPLACED IN KIND. ALL DAMAGE TO MOWED LAWNS SHALL BE REPLACED WITH AN APPROVED SOD, AND ALL DAMAGE TO UNMOWED FIELDS SHALL BE SEEDED IN ACCORDANCE WITH STANDARD SPECIFICATIONS 252 AND 250 RESPECTIVELY.

NOTE:
THE TRAFFIC SIGNAL CONTROLLER EQUIPMENT FOR THIS PROJECT SHALL BE "EAGLE" TO MATCH THE EXISTING ADJACENT SYSTEM.

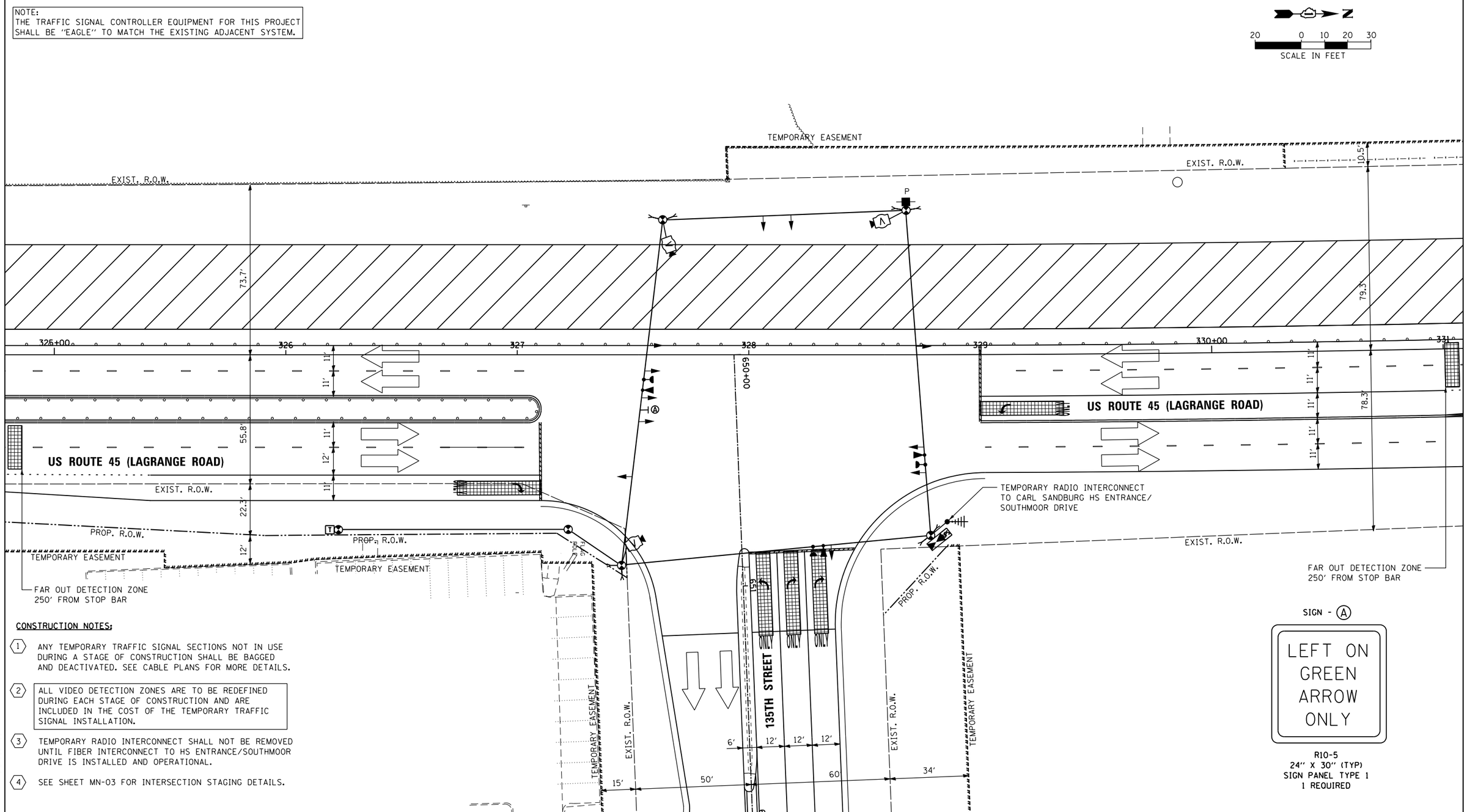

CONSTRUCTION NOTES:

1. ANY TEMPORARY TRAFFIC SIGNAL SECTIONS NOT IN USE DURING A STAGE OF CONSTRUCTION SHALL BE BAGGED AND DEACTIVATED. SEE CABLE PLANS FOR MORE DETAILS.
2. ALL VIDEO DETECTION ZONES ARE TO BE REDEFINED DURING EACH STAGE OF CONSTRUCTION AND ARE INCLUDED IN THE COST OF THE TEMPORARY TRAFFIC SIGNAL INSTALLATION.
3. TEMPORARY RADIO INTERCONNECT SHALL NOT BE REMOVED UNTIL FIBER INTERCONNECT TO HS ENTRANCE/SOUTHMOOR DRIVE IS INSTALLED AND OPERATIONAL.
4. SEE SHEET MN-03 FOR INTERSECTION STAGING DETAILS.

URS
100 S. WACKER DR.
SUITE 500
CHICAGO IL 60606
TEL (312)939-1000
FAX (312)939-4498

FILE NAME = D160M62-SHT-TD04.dgn	USER NAME = Anthony.Plutz	DESIGNED - MRF	REVISED -
		DRAWN - MRF	REVISED -
	PLOT SCALE = 40.0000 ' / in.	CHECKED - MJL	REVISED -
SHT_PLAN	PLOT DATE = 3/13/2013	DATE - 03/13/13	REVISED -

STATE OF ILLINOIS
DEPARTMENT OF TRANSPORTATION

TEMPORARY TRAFFIC SIGNAL INSTALLATION – STAGE 3
US 45 (LAGRANGE ROAD) AND 135TH STREET

SCALE: 1"=20' | SHEET 4 OF 6 SHEETS | STA. TO STA.

F.A.P RTE.	SECTION	COUNTY	TOTAL SHEETS	SHEET NO.
330	103R-5	COOK	778	275
	TD-04	CONTRACT NO. 60M62		
		ILLINOIS FED. AID PROJECT		

RESTORATION OF WORK AREA, RESTORATION OF THE TRAFFIC SIGNAL WORK AREA SHALL BE INCIDENTAL TO THE RELATED PAY ITEM SUCH AS FOUNDATION, CONDUIT, HANDHOLE, TRENCH AND BACKFILL, ETC., AND NO EXTRA COMPENSATION SHALL BE ALLOWED. ALL ROADWAY SURFACES SUCH AS SHOULDERS, MEDIANS, SIDEWALKS, PAVEMENT, ETC. SHALL BE REPLACED IN KIND. ALL DAMAGE TO MOWED LAWNS SHALL BE REPLACED WITH AN APPROVED SOD, AND ALL DAMAGE TO UNMOWED FIELDS SHALL BE SEEDED IN ACCORDANCE WITH STANDARD SPECIFICATIONS 252 AND 250 RESPECTIVELY.

NOTE:
THE TRAFFIC SIGNAL CONTROLLER EQUIPMENT FOR THIS PROJECT SHALL BE "EAGLE" TO MATCH THE EXISTING ADJACENT SYSTEM.

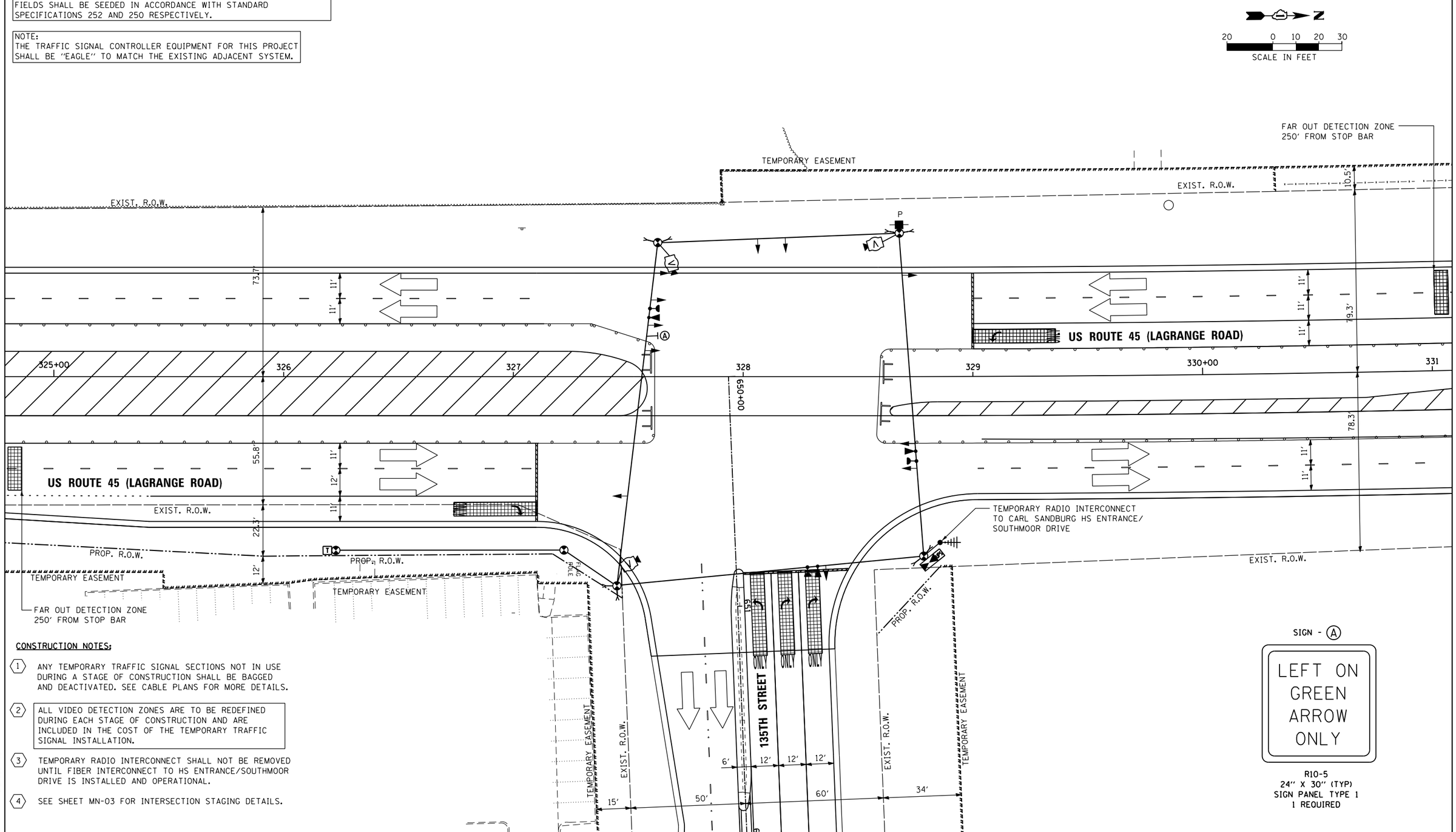

CONSTRUCTION NOTES:

1. ANY TEMPORARY TRAFFIC SIGNAL SECTIONS NOT IN USE DURING A STAGE OF CONSTRUCTION SHALL BE BAGGED AND DEACTIVATED. SEE CABLE PLANS FOR MORE DETAILS.
2. ALL VIDEO DETECTION ZONES ARE TO BE REDEFINED DURING EACH STAGE OF CONSTRUCTION AND ARE INCLUDED IN THE COST OF THE TEMPORARY TRAFFIC SIGNAL INSTALLATION.
3. TEMPORARY RADIO INTERCONNECT SHALL NOT BE REMOVED UNTIL FIBER INTERCONNECT TO HS ENTRANCE/SOUTHMOOR DRIVE IS INSTALLED AND OPERATIONAL.
4. SEE SHEET MN-03 FOR INTERSECTION STAGING DETAILS.

URS
100 S. WACKER DR.
SUITE 500
CHICAGO IL 60606
TEL (312)939-1000
FAX (312)939-4498

FILE NAME = D160M62-SHT-TD05.dgn	USER NAME = Anthony.Plutz	DESIGNED - MRF	REVISED -
		DRAWN - MRF	REVISED -
	PLOT SCALE = 40.0000 ' / in.	CHECKED - MJL	REVISED -
SHT_PLAN	PLOT DATE = 3/13/2013	DATE - 03/13/13	REVISED -

STATE OF ILLINOIS
DEPARTMENT OF TRANSPORTATION

TEMPORARY TRAFFIC SIGNAL INSTALLATION – STAGE 4
US 45 (LAGRANGE ROAD) AND 135TH STREET

SCALE: 1"=20' | SHEET 5 OF 6 SHEETS | STA. TO STA.

F.A.P RTE.	SECTION	COUNTY	TOTAL SHEETS	SHEET NO.
330	103R-5	COOK	778	276
	TD-05	CONTRACT NO. 60M62		
		ILLINOIS FED. AID PROJECT		

RESTORATION OF WORK AREA, RESTORATION OF THE TRAFFIC SIGNAL WORK AREA SHALL BE INCIDENTAL TO THE RELATED PAY ITEM SUCH AS FOUNDATION, CONDUIT, HANDHOLE, TRENCH AND BACKFILL, ETC., AND NO EXTRA COMPENSATION SHALL BE ALLOWED. ALL ROADWAY SURFACES SUCH AS SHOULDERS, MEDIANS, SIDEWALKS, PAVEMENT, ETC. SHALL BE REPLACED IN KIND. ALL DAMAGE TO MOWED LAWNS SHALL BE REPLACED WITH AN APPROVED SOD, AND ALL DAMAGE TO UNMOWED FIELDS SHALL BE SEEDED IN ACCORDANCE WITH STANDARD SPECIFICATIONS 252 AND 250 RESPECTIVELY.

NOTE:
THE TRAFFIC SIGNAL CONTROLLER EQUIPMENT FOR THIS PROJECT SHALL BE "EAGLE" TO MATCH THE EXISTING ADJACENT SYSTEM.

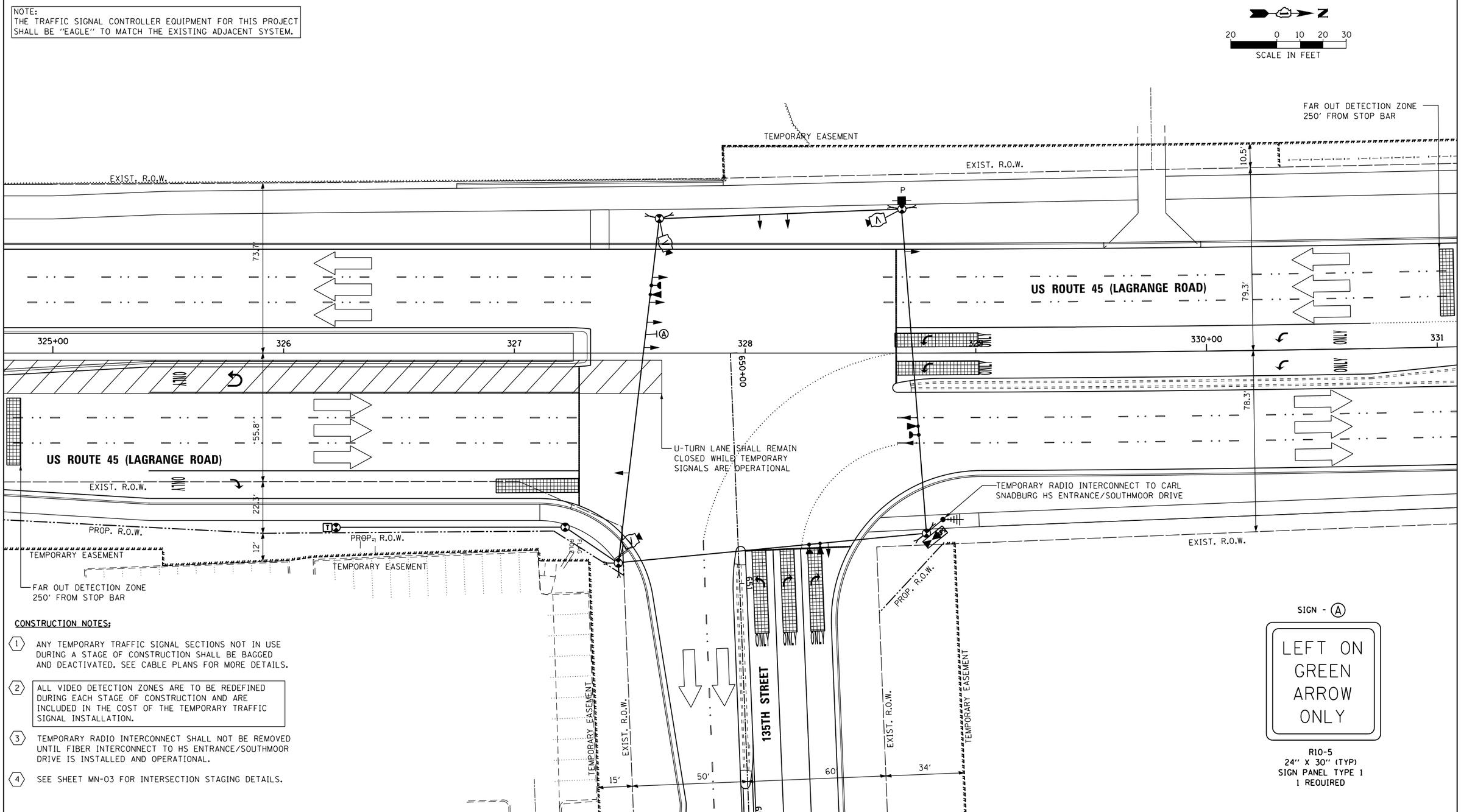

CONSTRUCTION NOTES:

1. ANY TEMPORARY TRAFFIC SIGNAL SECTIONS NOT IN USE DURING A STAGE OF CONSTRUCTION SHALL BE BAGGED AND DEACTIVATED. SEE CABLE PLANS FOR MORE DETAILS.
2. ALL VIDEO DETECTION ZONES ARE TO BE REDEFINED DURING EACH STAGE OF CONSTRUCTION AND ARE INCLUDED IN THE COST OF THE TEMPORARY TRAFFIC SIGNAL INSTALLATION.
3. TEMPORARY RADIO INTERCONNECT SHALL NOT BE REMOVED UNTIL FIBER INTERCONNECT TO HS ENTRANCE/SOUTHMOOR DRIVE IS INSTALLED AND OPERATIONAL.
4. SEE SHEET MN-03 FOR INTERSECTION STAGING DETAILS.

URS
100 S. WACKER DR.
SUITE 500
CHICAGO IL 60606
TEL (312)-939-0000
FAX (312)-939-4198

FILE NAME = D160M62-SHT-TD06.dgn	USER NAME = Anthony.Plutz	DESIGNED - MRF	REVISED -
		DRAWN - MRF	REVISED -
	PLOT SCALE = 40.0000 ' / in.	CHECKED - MJL	REVISED -
SHT_PLAN	PLOT DATE = 3/13/2013	DATE - 03/13/13	REVISED -

STATE OF ILLINOIS
DEPARTMENT OF TRANSPORTATION

TEMPORARY TRAFFIC SIGNAL INSTALLATION FINAL GEOMETRICS
US 45 (LAGRANGE ROAD) AND 135TH STREET

SCALE: 1"=20' | SHEET 6 OF 6 SHEETS | STA. TO STA.

F.A.P RTE.	SECTION	COUNTY	TOTAL SHEETS	SHEET NO.
330	103R-5	COOK	778	277
	TD-06	CONTRACT NO. 60M62		
		ILLINOIS FED. AID PROJECT		

TEMPORARY CONTROLLER SEQUENCE

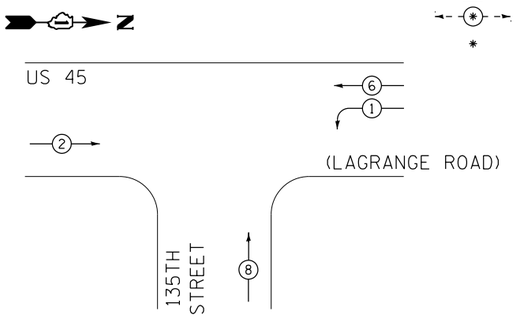

PHASE DESIGNATION DIAGRAM LEGEND

- DUAL ENTRY PHASE
- SINGLE ENTRY PHASE
- PEDESTRIAN PHASE
- * NUMBER REFERS TO ASSOCIATED PHAS

CONSTRUCTION NOTES:

1. TEMPORARY RADIO INTERCONNECT SHALL NOT BE REMOVED UNTIL FIBER INTERCONNECT TO HS ENTRANCE / SOUTHMOOR DR INTERSECTION IS INSTALLED AND OPERATIONAL.
2. BAG AND DEACTIVATE SIGNAL SECTION DURING PRE-STAGE, STAGES 1, 1A, AND 1B.

TEMPORARY PHASE DESIGNATION DIAGRAM

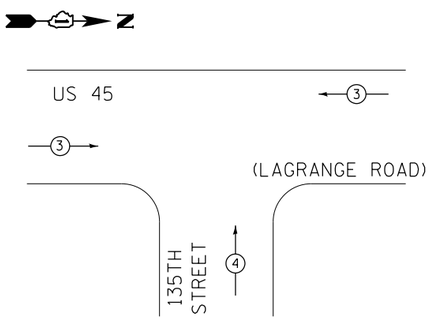

TEMPORARY EMERGENCY VEHICLE PREEMPTION SEQUENCE

TEMPORARY EMERGENCY VEHICLE PREEMPTORS		
EMERGENCY VEHICLE PREEMPTORS	3	4
MOVEMENT	← →	↑

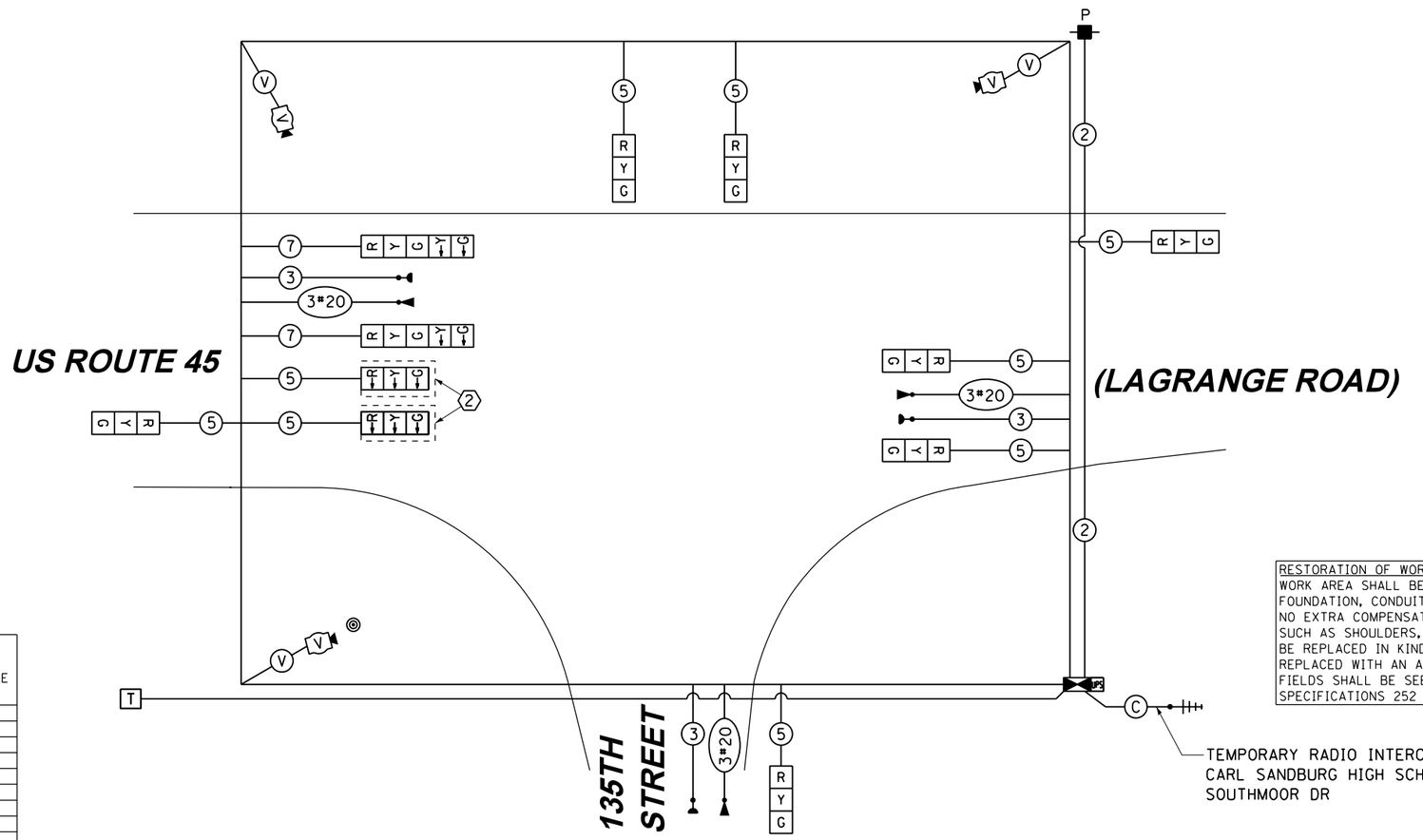

TEMPORARY RADIO INTERCONNECT TO CARL SANDBURG HIGH SCHOOL ENTRANCE / SOUTHMOOR DR

RESTORATION OF WORK AREA. RESTORATION OF THE TRAFFIC SIGNAL WORK AREA SHALL BE INCIDENTAL TO THE RELATED PAY ITEM SUCH AS FOUNDATION, CONDUIT, HANDHOLE, TRENCH AND BACKFILL, ETC., AND NO EXTRA COMPENSATION SHALL BE ALLOWED. ALL ROADWAY SURFACES SUCH AS SHOULDERS, MEDIANS, SIDEWALKS, PAVEMENT, ETC. SHALL BE REPLACED IN KIND. ALL DAMAGE TO MOWED LAWNS SHALL BE REPLACED WITH AN APPROVED SOD, AND ALL DAMAGE TO UNMOWED FIELDS SHALL BE SEEDED IN ACCORDANCE WITH STANDARD SPECIFICATIONS 252 AND 250 RESPECTIVELY.

NOTE:
THE TRAFFIC SIGNAL CONTROLLER EQUIPMENT FOR THIS PROJECT SHALL BE "EAGLE" TO MATCH THE EXISTING ADJACENT SYSTEM.

NOTE:
THE CONTRACTOR SHALL PROVIDE A TEMPORARY MASTER CONTROLLER AT THIS LOCATION. THE MASTER CONTROLLER, SIGNAL SYSTEM, AND TELEPHONE DROP SHALL BE MAINTAINED THROUGHOUT CONSTRUCTION.

I.D.O.T. TRAFFIC SIGNAL INSTALLATION ELECTRICAL SERVICE REQUIREMENTS					TOTAL WATTAGE
TYPE	NO. OF LAMPS	WATTAGE INCAND.	WATTAGE LED	% OPERATION	
SIGNAL (RED)	9		17	0.50	76.5
(YELLOW)	9		25	0.25	56.3
(GREEN)	9		15	0.25	33.8
ARROW	4		12	0.10	4.8
PED. SIGNAL	--		25	1.00	0.0
CONTROLLER	1		100	1.00	100.0
ILLUM. SIGN	--		25	0.05	0.0
VIDEO SYSTEM	1		150	1.00	150.0
FLASHER			25	0.50	
ENERGY COST TO:				TOTAL =	421.4

ILLINOIS DEPARTMENT OF TRANSPORTATION

DIVISION OF HIGHWAY/DISTRICT 1
201 WEST CENTER COURT/SCHAUMBURG, ILLINOIS 60196-1096

ENERGY SUPPLY: CONTACT: KATHRYN SUGRUE
PHONE: (708) 235-2337
COMPANY: COMMONWEALTH EDISON

TEMPORARY CABLE PLAN
PRE-STAGE, STAGE 1, 1A & 1B

URS
100 S. WACKER DR.
SUITE 500
CHICAGO IL 60606
TEL (312)939-1000
FAX (312)939-9498

FILE NAME = D160M62-SHT-TD07.dgn	USER NAME = Anthony.Plutz	DESIGNED - MRF	REVISED -
		DRAWN - MRF	REVISED -
	PLOT SCALE = 40.0000 ' / in.	CHECKED - MJL	REVISED -
SHT_PLAN	PLOT DATE = 3/13/2013	DATE - 03/13/13	REVISED -

STATE OF ILLINOIS
DEPARTMENT OF TRANSPORTATION

TEMPORARY CABLE PLAN, TEMPORARY PHASE DESIGNATION DIAGRAM AND EMERGENCY VEHICLE PREEMPTION SEQUENCE
US 45 (LAGRANGE ROAD) AND 135TH STREET – PRE-STAGE, STAGE 1, 1A & 1B

SCALE: N.T.S. SHEET 1 OF 2 SHEETS STA. TO STA.

F.A.P RTE.	SECTION	COUNTY	TOTAL SHEETS	SHEET NO.
330	103R-5	COOK	778	278
TD-07		CONTRACT NO. 60M62		
		ILLINOIS FED. AID PROJECT		

TEMPORARY CONTROLLER SEQUENCE

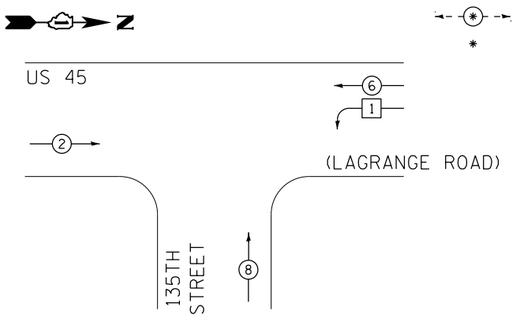

PHASE DESIGNATION DIAGRAM LEGEND

- DUAL ENTRY PHASE
- SINGLE ENTRY PHASE
- PEDESTRIAN PHASE
- * NUMBER REFERS TO ASSOCIATED PHAS

TEMPORARY PHASE DESIGNATION DIAGRAM

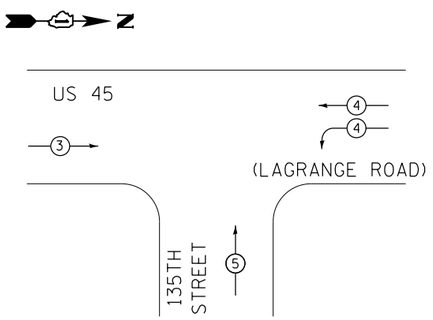

TEMPORARY EMERGENCY VEHICLE PREEMPTION SEQUENCE

TEMPORARY EMERGENCY VEHICLE PREEMPTORS			
EMERGENCY VEHICLE PREEMPTORS	3	4	5
MOVEMENT	→	←	↑

I.D.O.T. TRAFFIC SIGNAL INSTALLATION ELECTRICAL SERVICE REQUIREMENTS					TOTAL WATTAGE
TYPE	NO. OF LAMPS	WATTAGE INCAND.	WATTAGE LED	% OPERATION	
SIGNAL (RED)	11		17	0.50	93.5
(YELLOW)	11		25	0.25	68.8
(GREEN)	11		15	0.25	41.3
ARROW	--		12	0.10	0.0
PED. SIGNAL	--		25	1.00	0.0
CONTROLLER	1		100	1.00	100.0
ILLUM. SIGN	--		25	0.05	0.0
VIDEO SYSTEM	1		150	1.00	150.0
FLASHER			25	0.50	
ENERGY COST TO:				TOTAL =	453.6

ILLINOIS DEPARTMENT OF TRANSPORTATION

DIVISION OF HIGHWAY/DISTRICT 1
201 WEST CENTER COURT/SCHAUMBURG, ILLINOIS 60196-1096

ENERGY SUPPLY: CONTACT: KATHRYN SUGRUE
PHONE: (708) 235-2337
COMPANY: COMMONWEALTH EDISON

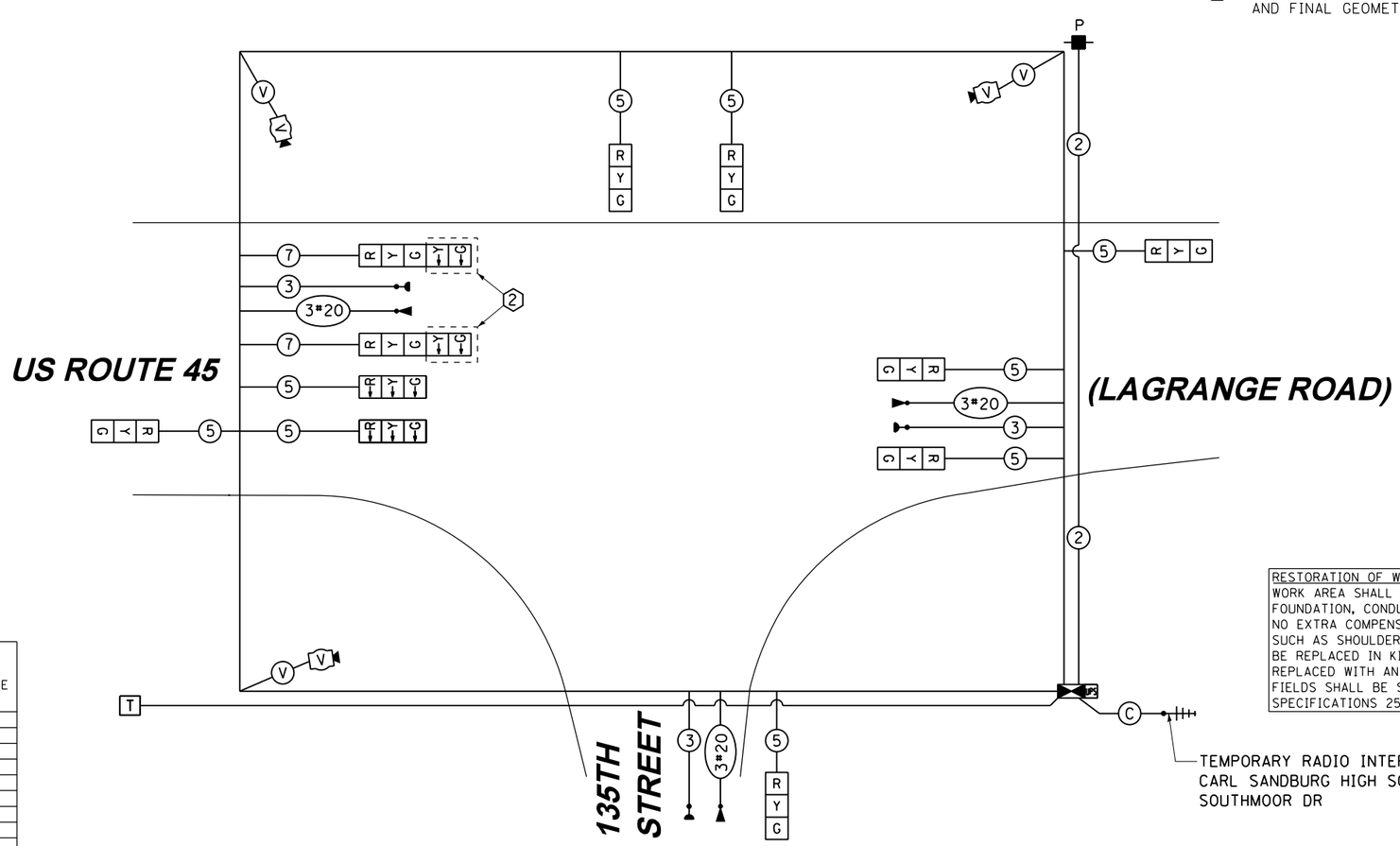

TEMPORARY RADIO INTERCONNECT TO CARL SANDBURG HIGH SCHOOL ENTRANCE / SOUTHMOOR DR

CONSTRUCTION NOTES:

1. TEMPORARY RADIO INTERCONNECT SHALL NOT BE REMOVED UNTIL FIBER INTERCONNECT TO HS ENTRANCE / SOUTHMOOR DR INTERSECTION IS INSTALLED AND OPERATIONAL.
2. BAG AND DEACTIVATE SIGNAL SECTION DURING STAGES 2, 3, 4 AND FINAL GEOMETRICS.

RESTORATION OF WORK AREA. RESTORATION OF THE TRAFFIC SIGNAL WORK AREA SHALL BE INCIDENTAL TO THE RELATED PAY ITEM SUCH AS FOUNDATION, CONDUIT, HANDHOLE, TRENCH AND BACKFILL, ETC., AND NO EXTRA COMPENSATION SHALL BE ALLOWED. ALL ROADWAY SURFACES SUCH AS SHOULDERS, MEDIANS, SIDEWALKS, PAVEMENT, ETC. SHALL BE REPLACED IN KIND. ALL DAMAGE TO MOWED LAWNS SHALL BE REPLACED WITH AN APPROVED SOD, AND ALL DAMAGE TO UNMOWED FIELDS SHALL BE SEEDED IN ACCORDANCE WITH STANDARD SPECIFICATIONS 252 AND 250 RESPECTIVELY.

NOTE:
THE TRAFFIC SIGNAL CONTROLLER EQUIPMENT FOR THIS PROJECT SHALL BE "EAGLE" TO MATCH THE EXISTING ADJACENT SYSTEM.

NOTE:
THE CONTRACTOR SHALL PROVIDE A TEMPORARY MASTER CONTROLLER AT THIS LOCATION. THE MASTER CONTROLLER, SIGNAL SYSTEM, AND TELEPHONE DROP SHALL BE MAINTAINED THROUGHOUT CONSTRUCTION.

TEMPORARY CABLE PLAN
STAGE 2, 3, 4 & FINAL GEOMETRICS

URS
100 S. WACKER DR.
SUITE 500
CHICAGO IL 60606
TEL (312)939-1000
FAX (312)939-9498

FILE NAME = D160M62-SHT-TD08.dgn	USER NAME = Anthony.Plutz	DESIGNED - MRF	REVISED -	STATE OF ILLINOIS DEPARTMENT OF TRANSPORTATION	TEMPORARY CABLE PLAN, TEMPORARY PHASE DESIGNATION DIAGRAM AND EMERGENCY VEHICLE PREEMPTION SEQUENCE
		DRAWN - MRF	REVISED -		US 45 (LAGRANGE ROAD) AND 135TH STREET – STAGE 2, 3, 4 & FINAL GEOMETRICS
	PLOT SCALE = 40.0000 ' / in.	CHECKED - MJL	REVISED -		SCALE: N.T.S. SHEET 2 OF 2 SHEETS STA. TO STA.
SHT_PLAN	PLOT DATE = 3/13/2013	DATE - 03/13/13	REVISED -		

F.A.P RTE.	SECTION	COUNTY	TOTAL SHEETS	SHEET NO.
330	103R-5	COOK	778	279
TD-08		CONTRACT NO. 60M62		
		ILLINOIS FED. AID PROJECT		

GENERAL NOTES

1. IT SHALL BE THE CONTRACTOR'S RESPONSIBILITY TO VERIFY ALL DIMENSIONS AND CONDITIONS EXISTING IN THE FIELD PRIOR TO ORDERING MATERIALS AND BEGINNING CONSTRUCTION. THIS SHALL INCLUDE LOCATING THE MAST ARM FOUNDATIONS AND VERIFYING THE MAST ARM LENGTHS.
2. THE EXACT LOCATION OF ALL UTILITIES SHALL BE FIELD VERIFIED BY THE CONTRACTOR BEFORE ORDERING ANY MATERIALS AND STARTING ANY WORK. FOR LOCATIONS OF UTILITIES, LOCALLY OWNED EQUIPMENT, LEASED ENFORCEMENT CAMERA SYSTEM FACILITIES AND IDOT UNDERGROUND FACILITIES, CONTACT THE LOCAL COUNTIES, MUNICIPALITIES AND IDOT FOR LOCATES. THE CONTRACTOR SHALL CALL 'JULIE' AT (800) 892-0123 OR 811, IN THE CITY OF CHICAGO CONTACT DIGGER AT (312) 744-7000 FOR FIELD LOCATIONS OF BURIED UTILITIES (48 HOUR NOTIFICATION REQUIRED).
3. THE CONTRACTOR SHALL CHECK THE PROPOSED TRAFFIC SIGNAL EQUIPMENT LOCATIONS FOR OVERHEAD UTILITY CONFLICTS. THE CONTRACTOR SHALL COORDINATE ANY CONFLICTS WITH THE UTILITY COMPANIES AND THE RESIDENT ENGINEER BEFORE ORDERING MATERIALS.
4. THE CONTRACTOR SHALL COORDINATE CONSTRUCTION ACTIVITIES WITH UTILITY COMPANIES, LOCAL GOVERNMENT AGENCIES AND IDOT.

RESTORATION OF WORK AREA. RESTORATION OF THE TRAFFIC SIGNAL WORK AREA SHALL BE INCIDENTAL TO THE RELATED PAY ITEM SUCH AS FOUNDATION, CONDUIT, HANDHOLE, TRENCH AND BACKFILL, ETC., AND NO EXTRA COMPENSATION SHALL BE ALLOWED. ALL ROADWAY SURFACES SUCH AS SHOULDERS, MEDIANS, SIDEWALKS, PAVEMENT, ETC. SHALL BE REPLACED IN KIND. ALL DAMAGE TO MOWED LAWNS SHALL BE REPLACED WITH AN APPROVED SOD, AND ALL DAMAGE TO UNMOWED FIELDS SHALL BE SEEDED IN ACCORDANCE WITH STANDARD SPECIFICATIONS 252 AND 250 RESPECTIVELY.

NOTE:
THE TRAFFIC SIGNAL CONTROLLER EQUIPMENT FOR THIS PROJECT SHALL BE "EAGLE" TO MATCH THE EXISTING ADJACENT SYSTEM.

NOTE:
GALVANIZED STEEL CONDUIT IDENTIFIED AS IN TRENCH (T) OR PUSHED (P) IS SHOWN FOR INFORMATION ONLY. ALL UNDERGROUND CONDUIT SHALL BE PAID FOR AT THE CONTRACT UNIT PRICE PER FOOT FOR UNDERGROUND CONDUIT, OF THE TYPE AND SIZE SPECIFIED, REGARDLESS OF THE METHOD OF INSTALLATION.

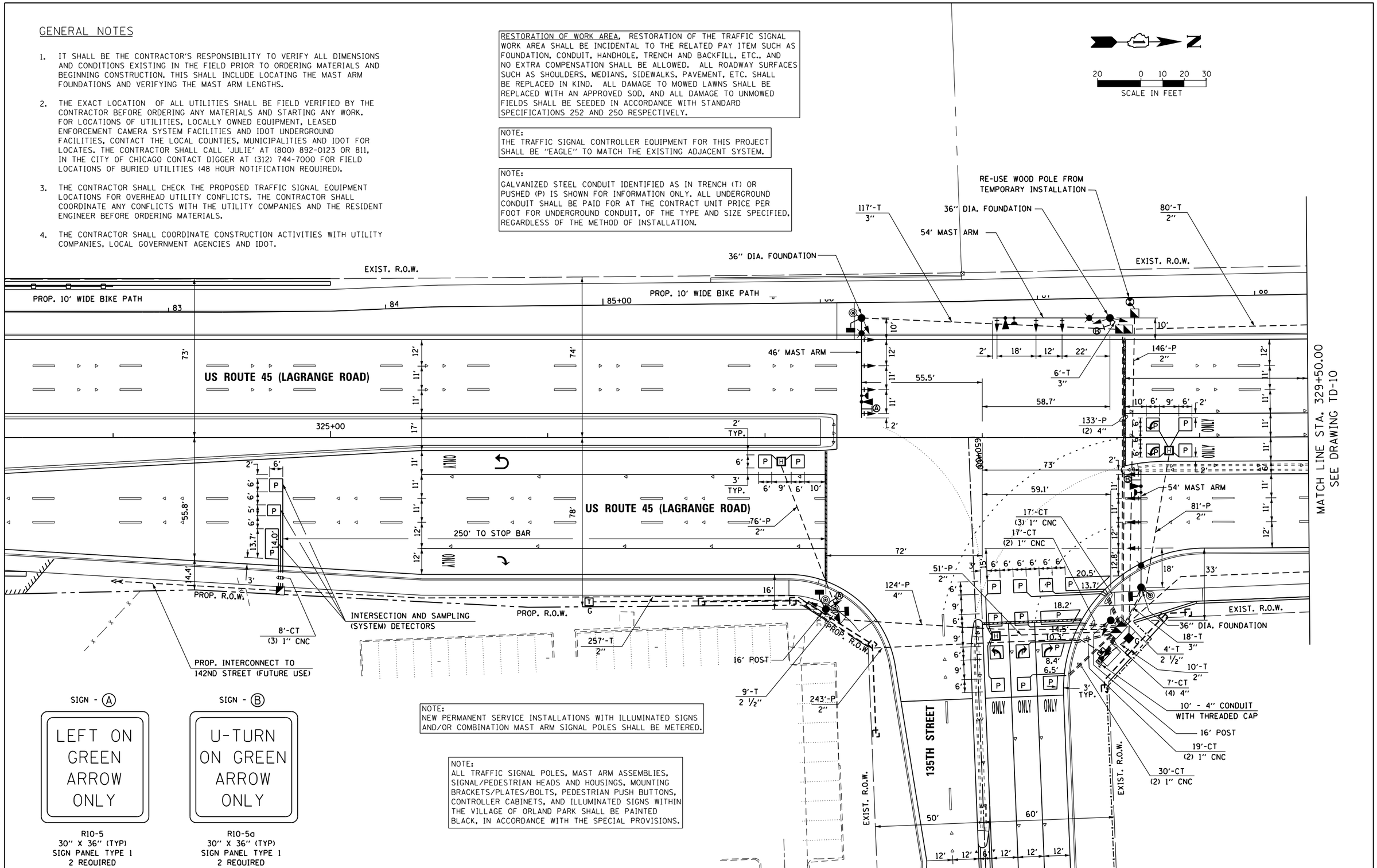

SIGN - (A)

LEFT ON GREEN ARROW ONLY

R10-5
30" X 36" (TYP)
SIGN PANEL TYPE 1
2 REQUIRED

SIGN - (B)

U-TURN ON GREEN ARROW ONLY

R10-5a
30" X 36" (TYP)
SIGN PANEL TYPE 1
2 REQUIRED

NOTE:
NEW PERMANENT SERVICE INSTALLATIONS WITH ILLUMINATED SIGNS AND/OR COMBINATION MAST ARM SIGNAL POLES SHALL BE METERED.

NOTE:
ALL TRAFFIC SIGNAL POLES, MAST ARM ASSEMBLIES, SIGNAL/PEDESTRIAN HEADS AND HOUSINGS, MOUNTING BRACKETS/PLATES/BOLTS, PEDESTRIAN PUSH BUTTONS, CONTROLLER CABINETS, AND ILLUMINATED SIGNS WITHIN THE VILLAGE OF ORLAND PARK SHALL BE PAINTED BLACK, IN ACCORDANCE WITH THE SPECIAL PROVISIONS.

URS
100 S. WACKER DR.
SUITE 500
CHICAGO IL 60606
TEL (312)939-1000
FAX (312)939-4198

FILE NAME = D160M62-SHT-TD09.dgn	USER NAME = Anthony.Plutz	DESIGNED - MRF	REVISED -
		DRAWN - MRF	REVISED -
	PLOT SCALE = 40.000000 ' / in.	CHECKED - MJL	REVISED -
SHT_PLAN	PLOT DATE = 3/13/2013	DATE - 03/13/13	REVISED -

STATE OF ILLINOIS
DEPARTMENT OF TRANSPORTATION

TRAFFIC SIGNAL INSTALLATION PLAN
US 45 (LAGRANGE ROAD) AND 135TH STREET

SCALE: 1"=20' | SHEET 1 OF 2 SHEETS | STA. TO STA.

F.A.P RTE.	SECTION	COUNTY	TOTAL SHEETS	SHEET NO.
330	103R-5	COOK	778	280
		CONTRACT NO. 60M62		
		ILLINOIS FED. AID PROJECT		

GENERAL NOTES

1. IT SHALL BE THE CONTRACTOR'S RESPONSIBILITY TO VERIFY ALL DIMENSIONS AND CONDITIONS EXISTING IN THE FIELD PRIOR TO ORDERING MATERIALS AND BEGINNING CONSTRUCTION. THIS SHALL INCLUDE LOCATING THE MAST ARM FOUNDATIONS AND VERIFYING THE MAST ARM LENGTHS.

2. THE EXACT LOCATION OF ALL UTILITIES SHALL BE FIELD VERIFIED BY THE CONTRACTOR BEFORE ORDERING ANY MATERIALS AND STARTING ANY WORK. FOR LOCATIONS OF UTILITIES, LOCALLY OWNED EQUIPMENT, LEASED ENFORCEMENT CAMERA SYSTEM FACILITIES AND IDOT UNDERGROUND FACILITIES, CONTACT THE LOCAL COUNTIES, MUNICIPALITIES AND IDOT FOR LOCATES. THE CONTRACTOR SHALL CALL 'JULIE' AT (800) 892-0123 OR 811, IN THE CITY OF CHICAGO CONTACT DIGGER AT (312) 744-7000 FOR FIELD LOCATIONS OF BURIED UTILITIES (48 HOUR NOTIFICATION REQUIRED).

3. THE CONTRACTOR SHALL CHECK THE PROPOSED TRAFFIC SIGNAL EQUIPMENT LOCATIONS FOR OVERHEAD UTILITY CONFLICTS. THE CONTRACTOR SHALL COORDINATE ANY CONFLICTS WITH THE UTILITY COMPANIES AND THE RESIDENT ENGINEER BEFORE ORDERING MATERIALS.

4. THE CONTRACTOR SHALL COORDINATE CONSTRUCTION ACTIVITIES WITH UTILITY COMPANIES, LOCAL GOVERNMENT AGENCIES AND IDOT.

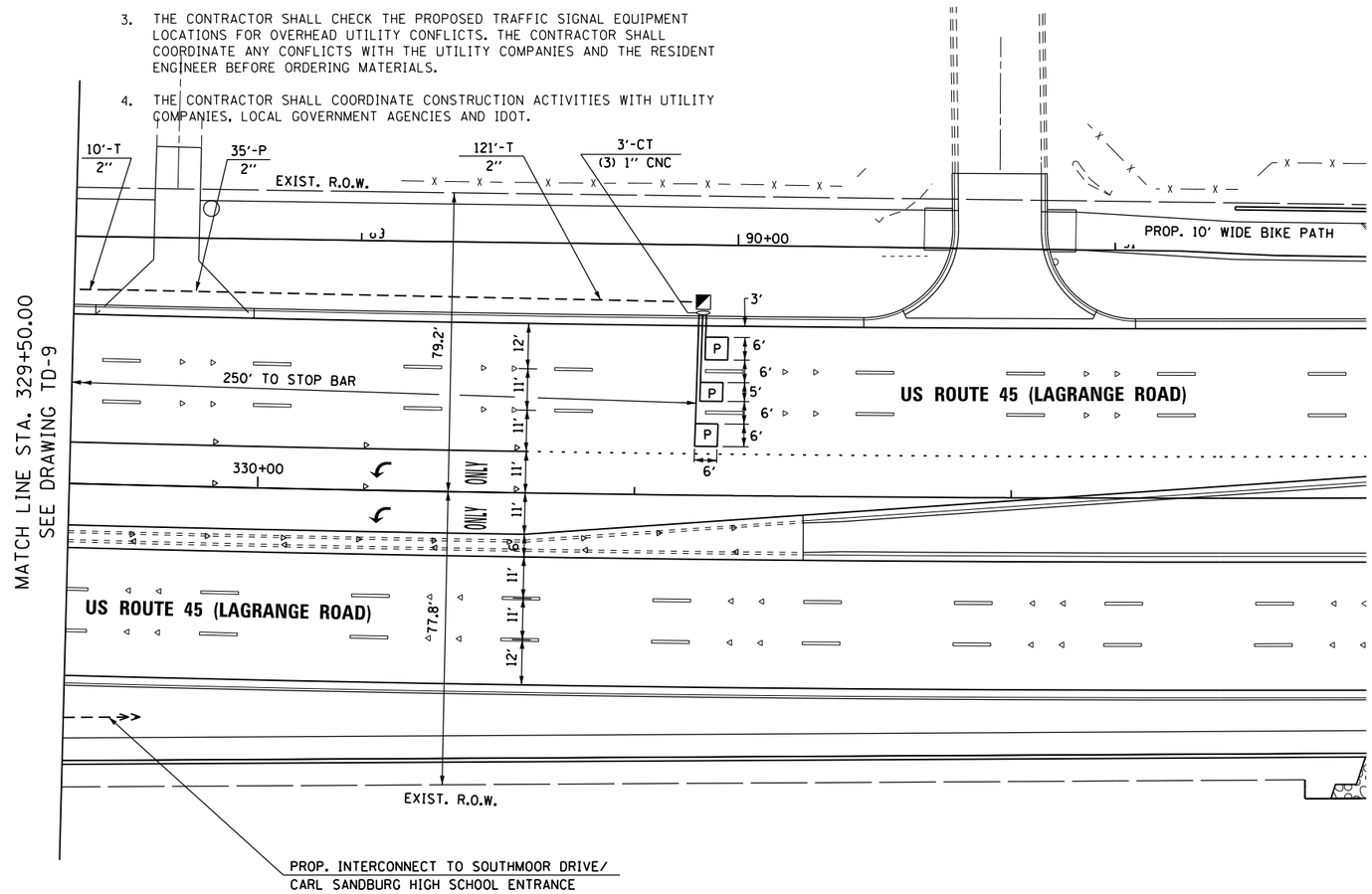

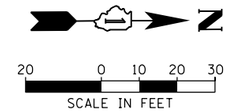

RESTORATION OF WORK AREA. RESTORATION OF THE TRAFFIC SIGNAL WORK AREA SHALL BE INCIDENTAL TO THE RELATED PAY ITEM SUCH AS FOUNDATION, CONDUIT, HANDHOLE, TRENCH AND BACKFILL, ETC., AND NO EXTRA COMPENSATION SHALL BE ALLOWED. ALL ROADWAY SURFACES SUCH AS SHOULDERS, MEDIANS, SIDEWALKS, PAVEMENT, ETC. SHALL BE REPLACED IN KIND. ALL DAMAGE TO MOWED LAWNS SHALL BE REPLACED WITH AN APPROVED SOD, AND ALL DAMAGE TO UNMOWED FIELDS SHALL BE SEEDED IN ACCORDANCE WITH STANDARD SPECIFICATIONS 252 AND 250 RESPECTIVELY.

NOTE:
THE TRAFFIC SIGNAL CONTROLLER EQUIPMENT FOR THIS PROJECT SHALL BE "EAGLE" TO MATCH THE EXISTING ADJACENT SYSTEM.

NOTE:
GALVANIZED STEEL CONDUIT IDENTIFIED AS IN TRENCH (T) OR PUSHED (P) IS SHOWN FOR INFORMATION ONLY. ALL UNDERGROUND CONDUIT SHALL BE PAID FOR AT THE CONTRACT UNIT PRICE PER FOOT FOR UNDERGROUND CONDUIT, OF THE TYPE AND SIZE SPECIFIED, REGARDLESS OF THE METHOD OF INSTALLATION.

URS
100 S. WACKER DR.
SUITE 500
CHICAGO, IL 60606
TEL (312)-939-1000
FAX (312)-939-9498

FILE NAME = D160M62-SHT-TD10.dgn	USER NAME = Anthony.Plutz	DESIGNED - MRF	REVISED -
		DRAWN - MRF	REVISED -
	PLOT SCALE = 40.000000 ' / in.	CHECKED - MJL	REVISED -
SHT_PLAN	PLOT DATE = 3/13/2013	DATE - 03/13/13	REVISED -

STATE OF ILLINOIS
DEPARTMENT OF TRANSPORTATION

TRAFFIC SIGNAL INSTALLATION PLAN
US 45 (LAGRANGE ROAD) AND 135TH STREET

SCALE: 1"=20' | SHEET 2 OF 2 SHEETS | STA. TO STA.

F.A.P RTE.	SECTION	COUNTY	TOTAL SHEETS	SHEET NO.
330	103R-5	COOK	778	281
	TD-10	CONTRACT NO. 60M62		
		ILLINOIS FED. AID PROJECT		

CONTROLLER SEQUENCE

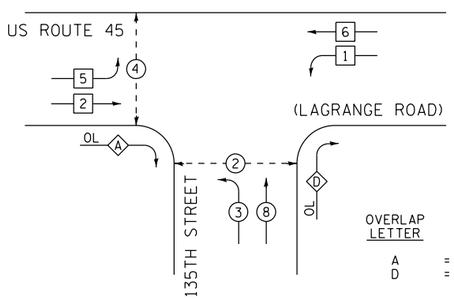

OVERLAP LETTER		PERMISSIVE PHASE		PROTECTED PHASE
A	=	2	+	3
D	=	8	+	1

PHASE DESIGNATION DIAGRAM LEGEND

- DUAL ENTRY PHASE
- SINGLE ENTRY PHASE
- PEDESTRIAN PHASE
- * NUMBER REFERS TO ASSOCIATED PHASE
- OL RIGHT TURN OVERLAP:

NOTE:
ALL TRAFFIC SIGNAL POLES, MAST ARM ASSEMBLIES, SIGNAL/PEDESTRIAN HEADS AND HOUSINGS, MOUNTING BRACKETS/PLATES/BOLTS, PEDESTRIAN PUSH BUTTONS, CONTROLLER CABINETS, AND ILLUMINATED SIGNS WITHIN THE VILLAGE OF ORLAND PARK SHALL BE PAINTED BLACK, IN ACCORDANCE WITH THE SPECIAL PROVISIONS.

SCHEDULE OF QUANTITIES

ITEM	UNIT	TOTAL
SIGN PANEL - TYPE 1	SQ FT	30
SERVICE INSTALLATION - GROUND MOUNTED	EACH	1
UNDERGROUND CONDUIT, GALVANIZED STEEL, 2" DIA.	FOOT	1049
UNDERGROUND CONDUIT, GALVANIZED STEEL, 2 1/2" DIA.	FOOT	13
UNDERGROUND CONDUIT, GALVANIZED STEEL, 3" DIA.	FOOT	141
UNDERGROUND CONDUIT, GALVANIZED STEEL, 4" DIA.	FOOT	428
HANDHOLE	EACH	3
HEAVY-DUTY HANDHOLE	EACH	3
DOUBLE HANDHOLE	EACH	2
FULL-ACTUATED CONTROLLER AND TYPE V CABINET, SPECIAL	EACH	1
UNINTERRUPTIBLE POWER SUPPLY, SPECIAL	EACH	1
TRANSCEIVER - FIBER OPTIC	EACH	1
ELECTRIC CABLE IN CONDUIT, SIGNAL NO. 14 2C	FOOT	703
ELECTRIC CABLE IN CONDUIT, SIGNAL NO. 14 3C	FOOT	1448
ELECTRIC CABLE IN CONDUIT, SIGNAL NO. 14 5C	FOOT	3021
ELECTRIC CABLE IN CONDUIT, SIGNAL NO. 14 7C	FOOT	535
ELECTRIC CABLE IN CONDUIT, LEAD-IN, NO. 14 1 PAIR	FOOT	2241
ELECTRIC CABLE IN CONDUIT, SERVICE, NO. 6 2 C	FOOT	181
ELECTRIC CABLE IN CONDUIT, EQUIPMENT GROUNDING CONDUCTOR, NO. 6 1 C	FOOT	705
TRAFFIC SIGNAL POST, GALVANIZED STEEL 16 FT.	EACH	2
STEEL COMBINATION MAST ARM ASSEMBLY AND POLE 46 FT.	EACH	1
STEEL COMBINATION MAST ARM ASSEMBLY AND POLE 54 FT.	EACH	2
CONCRETE FOUNDATION, TYPE A	FOOT	8
CONCRETE FOUNDATION, TYPE C	FOOT	4
CONCRETE FOUNDATION, TYPE E 36-INCH DIAMETER	FOOT	43
SIGNAL HEAD, LED, 1-FACE, 3-SECTION, MAST-ARM MOUNTED	EACH	9
SIGNAL HEAD, LED, 1-FACE, 3-SECTION, BRACKET MOUNTED	EACH	1
SIGNAL HEAD, LED, 1-FACE, 5-SECTION, BRACKET MOUNTED	EACH	1
SIGNAL HEAD, LED, 1-FACE, 5-SECTION, MAST-ARM MOUNTED	EACH	2
SIGNAL HEAD, LED, 2-FACE, 3-SECTION, BRACKET MOUNTED	EACH	1
SIGNAL HEAD, LED, 2-FACE, 1-3 SECTION, 1-5 SECTION, BRACKET MOUNTED	EACH	1
PEDESTRIAN SIGNAL HEAD, LED, 1-FACE, BRACKET MOUNTED WITH COUNTDOWN TIMER	EACH	2
PEDESTRIAN SIGNAL HEAD, LED, 2-FACE, BRACKET MOUNTED WITH COUNTDOWN TIMER	EACH	1
TRAFFIC SIGNAL BACKPLATE, LOUVERED, ALUMINUM	EACH	11
INDUCTIVE LOOP DETECTOR	EACH	10
PREFORMED DETECTOR LOOP	FOOT	985
* LIGHT DETECTOR	EACH	3
* LIGHT DETECTOR AMPLIFIER	EACH	1
PEDESTRIAN PUSH-BUTTON	EACH	4
TEMPORARY TRAFFIC SIGNAL INSTALLATION	EACH	1
REMOVE EXISTING TRAFFIC SIGNAL EQUIPMENT	EACH	1
REMOVE EXISTING HANDHOLE	EACH	8
REMOVE EXISTING CONCRETE FOUNDATION	EACH	7
* ELECTRIC CABLE IN CONDUIT NO. 20 3/C, TWISTED, SHIELDED	FOOT	724
** LED INTERNALLY ILLUMINATED STREET NAME SIGN	EACH	3
ELECTRIC SERVICE DISCONNECT, LIGHTING AND TRAFFIC SIGNAL	EACH	1
TEMPORARY TRAFFIC SIGNAL TIMING	EACH	1

* 100% COST TO ORLAND FIRE PROTECTION DISTRICT
** 100% COST TO VILLAGE OF ORLAND PARK

PHASE DESIGNATION DIAGRAM

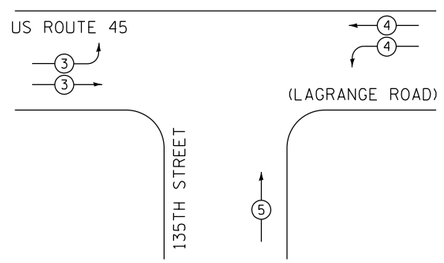

PROP. INTERSECTION AND (SAMPLING) SYSTEM DETECTORS

PROPOSED EMERGENCY VEHICLE PREEMPTORS			
EMERGENCY VEHICLE PREEMPTORS	3	4	5
MOVEMENT			

EMERGENCY VEHICLE PREEMPTION SEQUENCE

I.D.O.T. TRAFFIC SIGNAL INSTALLATION ELECTRICAL SERVICE REQUIREMENTS					TOTAL WATTAGE
TYPE	WATTAGE NO. OF LAMPS	x INCAND.	LED	x % OPERATION	
SIGNAL (RED)	17		17	0.50	144.5
(YELLOW)	17		25	0.25	106.3
(GREEN)	17		15	0.25	63.8
ARROW	10		12	0.10	12.0
PED. SIGNAL	4		25	1.00	100.0
CONTROLLER	1		100	1.00	100.0
ILLUM. SIGN	3		25	0.05	3.8
FLASHER			25	0.50	
ENERGY COST TO:				TOTAL =	530.4

ILLINOIS DEPARTMENT OF TRANSPORTATION

201 WEST CENTER COURT
SCHAUMBURG, ILLINOIS 60196-1096

ENERGY SUPPLY: CONTACT: KATHRYN SUGRUE
PHONE: (708) 235-2337
COMPANY: COMMONWEALTH EDISON

URS
100 S. WACKER DR.
SUITE 500
CHICAGO IL 60606
TEL (312)-939-0000
FAX (312)-939-4198

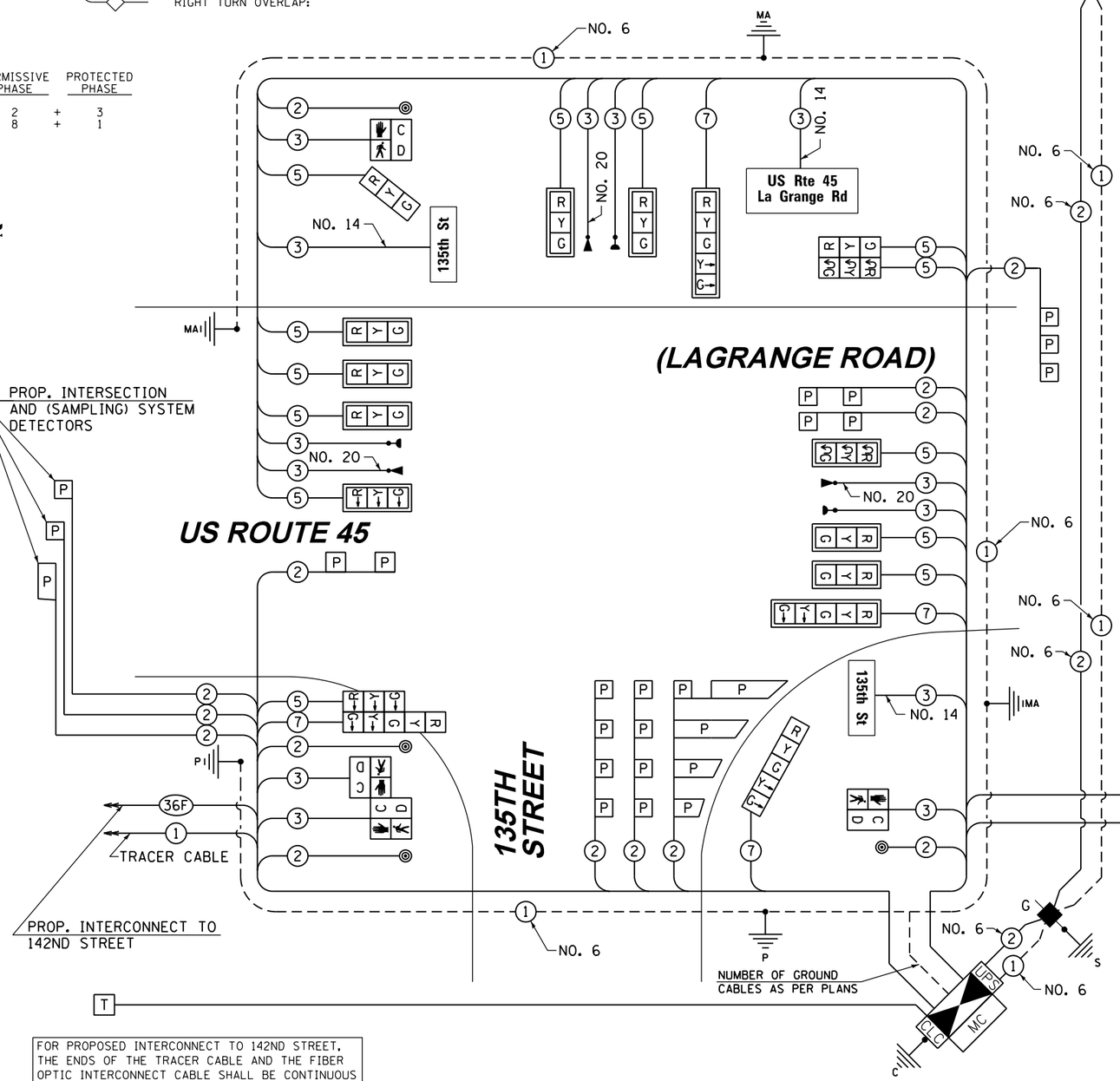

FOR PROPOSED INTERCONNECT TO 142ND STREET, THE ENDS OF THE TRACER CABLE AND THE FIBER OPTIC INTERCONNECT CABLE SHALL BE CONTINUOUS AND EXTEND INTO THE CONTROLLER CABINET, BUT SHALL NOT BE CONNECTED TO THE CONTROLLER.

FOR PROPOSED INTERCONNECT TO SOUTHMOOR DRIVE, THE END OF THE TRACER CABLE SHALL BE CONTINUOUS AND EXTEND INTO THE CONTROLLER CABINET.

NOTE:
THE TRAFFIC SIGNAL CONTROLLER EQUIPMENT FOR THIS PROJECT SHALL BE "EAGLE" TO MATCH THE EXISTING ADJACENT SYSTEM.

RESTORATION OF WORK AREA, RESTORATION OF THE TRAFFIC SIGNAL WORK AREA SHALL BE INCIDENTAL TO THE RELATED PAY ITEM SUCH AS FOUNDATION, CONDUIT, HANDHOLE, TRENCH AND BACKFILL, ETC., AND NO EXTRA COMPENSATION SHALL BE ALLOWED. ALL ROADWAY SURFACES SUCH AS SHOULDERS, MEDIANS, SIDEWALKS, PAVEMENT, ETC. SHALL BE REPLACED IN KIND. ALL DAMAGE TO MOWED LAWNS SHALL BE REPLACED WITH AN APPROVED SOD, AND ALL DAMAGE TO UNMOWED FIELDS SHALL BE SEEDED IN ACCORDANCE WITH STANDARD SPECIFICATIONS 252 AND 250 RESPECTIVELY.

NOTE:
NEW PERMANENT SERVICE INSTALLATIONS WITH ILLUMINATED SIGNS AND/OR COMBINATION MAST ARM SIGNAL POLES SHALL BE METERED.

CABLE PLAN

FILE NAME = D160M62-SHT-TD11.dgn	USER NAME = Anthony.Plutz	DESIGNED - MRF	REVISED -	STATE OF ILLINOIS DEPARTMENT OF TRANSPORTATION	SCHEDULE OF QUANTITIES, CABLE PLAN, PHASE DESIGNATION DIAGRAM AND EMERGENCY VEHICLE PREEMPTION SEQUENCE US 45 (LAGRANGE ROAD) AND 135TH STREET	F.A.P RTE.	SECTION	COUNTY	TOTAL SHEETS	SHEET NO.
		DRAWN - MRF	REVISED -			330	103R-5	COOK	778	282
	PLOT SCALE = 40.0000 ' / in.	CHECKED - MJL	REVISED -			TD-11		CONTRACT NO. 60M62		
SHT_PLAN	PLOT DATE = 3/13/2013	DATE - 03/13/13	REVISED -		SCALE: N.T.S. SHEET 1 OF 1 SHEETS STA. TO STA.			ILLINOIS FED. AID PROJECT		

RESTORATION OF WORK AREA. RESTORATION OF THE TRAFFIC SIGNAL WORK AREA SHALL BE INCIDENTAL TO THE RELATED PAY ITEM SUCH AS FOUNDATION, CONDUIT, HANDHOLE, TRENCH AND BACKFILL, ETC., AND NO EXTRA COMPENSATION SHALL BE ALLOWED. ALL ROADWAY SURFACES SUCH AS SHOULDERS, MEDIANS, SIDEWALKS, PAVEMENT, ETC. SHALL BE REPLACED IN KIND. ALL DAMAGE TO MOWED LAWNS SHALL BE REPLACED WITH AN APPROVED SOD, AND ALL DAMAGE TO UNMOWED FIELDS SHALL BE SEEDED IN ACCORDANCE WITH STANDARD SPECIFICATIONS 252 AND 250 RESPECTIVELY.

NOTE:
THE TRAFFIC SIGNAL CONTROLLER EQUIPMENT FOR THIS PROJECT SHALL BE "EAGLE" TO MATCH THE EXISTING ADJACENT SYSTEM.

CONSTRUCTION NOTES;

1. ANY TEMPORARY TRAFFIC SIGNAL SECTIONS NOT IN USE DURING A STAGE OF CONSTRUCTION SHALL BE BAGGED AND DEACTIVATED. SEE CABLE PLANS FOR MORE DETAILS.
2. ALL VIDEO DETECTION ZONES ARE TO BE REDEFINED DURING EACH STAGE OF CONSTRUCTION AND ARE INCLUDED IN THE COST OF THE TEMPORARY TRAFFIC SIGNAL INSTALLATION.
3. TEMPORARY RADIO INTERCONNECT SHALL NOT BE REMOVED UNTIL FIBER INTERCONNECT TO 135TH STREET AND 131ST STREET IS INSTALLED AND OPERATIONAL.

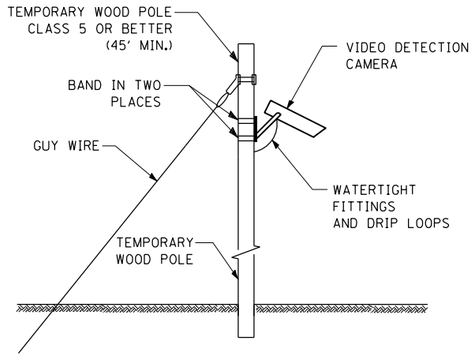

TEMPORARY VIDEO DETECTION MOUNTING DETAIL

(NOT TO SCALE)

NOTES FOR TEMPORARY TRAFFIC SIGNAL;

1. ALL CONTROL EQUIPMENT SUCH AS COMMUNICATION DEVICES FOR THE TEMPORARY TRAFFIC SIGNAL(S) SHALL BE FURNISHED BY THE CONTRACTOR.
2. ONLY CONTROLLERS SUPPLIED BY ONE OF THE DISTRICT APPROVED CLOSED LOOP EQUIPMENT MANUFACTURERS WILL BE APPROVED FOR USE AT TEMPORARY SIGNAL LOCATIONS. ALL CONTROLLERS USED FOR TEMPORARY TRAFFIC SIGNALS SHALL BE FULLY ACTUATED NEMA MICROPROCESSOR BASED WITH RS232 DATA ENTRY PORTS COMPATIBLE WITH EXISTING MONITORING SOFTWARE APPROVED BY IDOT DISTRICT 1, INSTALLED IN A NEMA TS2 CABINET. ONLY ONE BRAND OF CONTROLLER WILL BE ACCEPTED FOR ANY ONE CONTRACT.
3. ALL TRAFFIC SIGNAL SECTIONS AND PEDESTRIAN SIGNAL SECTIONS SHALL BE LED AND 12" (300mm) DIAMETER. HEADS SHALL BE PLACED AS INDICATED ON THE TEMPORARY TRAFFIC SIGNAL PLAN OR AS DIRECTED BY THE ENGINEER. PEDESTRIAN SIGNALS SHALL INCLUDE SOLID INTERNATIONAL SYMBOLS. PEDESTRIAN SIGNALS WITH COUNTDOWN TIMERS SHALL BE USED WHEN THE EXISTING INSTALLATION UTILIZES COUNTDOWN TYPE OR AS DIRECTED BY THE ENGINEER. COUNTDOWN TYPE PEDESTRIAN SIGNALS ARE NOT TO BE INSTALLED AT A RAILROAD INTERSECTION. THE CONTRACTOR SHALL FURNISH ENOUGH CABLE SLACK TO RELOCATE HEADS TO ANY POSITION ON THE SPAN WIRE OR AT LOCATIONS ILLUSTRATED ON THE PLANS FOR CONSTRUCTION STAGING. THE TEMPORARY TRAFFIC SIGNAL SHALL REMAIN IN OPERATION DURING ALL SIGNAL HEAD RELOCATIONS. EACH TEMPORARY TRAFFIC SIGNAL HEAD SHALL HAVE ITS OWN CABLE FROM THE CONTROLLER CABINET TO THE SIGNAL HEAD.
4. ALL EXISTING STREET NAME AND INTERSECTION REGULATORY SIGNS SHALL BE REMOVED FROM EXISTING POLES, RELOCATED AND SECURELY FASTENED TO THE SPAN WIRE OR WOOD POLE AS DIRECTED BY THE ENGINEER.
5. ANY TEMPORARY SIGNAL WITHIN AN EXISTING CLOSED LOOP TRAFFIC SIGNAL SYSTEM SHALL BE INTERCONNECTED TO THAT SYSTEM USING SIMILAR BRAND CONTROL EQUIPMENT.

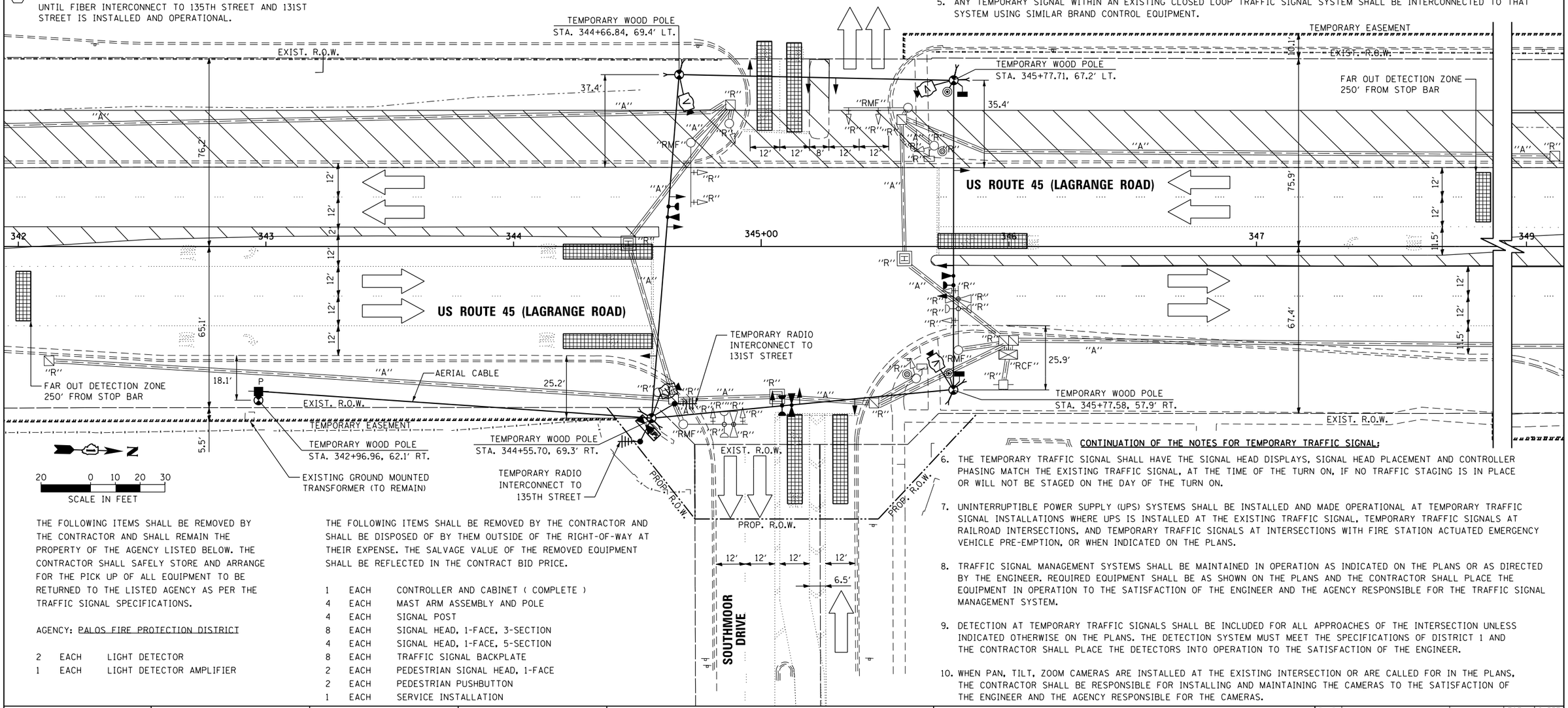

THE FOLLOWING ITEMS SHALL BE REMOVED BY THE CONTRACTOR AND SHALL REMAIN THE PROPERTY OF THE AGENCY LISTED BELOW. THE CONTRACTOR SHALL SAFELY STORE AND ARRANGE FOR THE PICK UP OF ALL EQUIPMENT TO BE RETURNED TO THE LISTED AGENCY AS PER THE TRAFFIC SIGNAL SPECIFICATIONS.

AGENCY: PALOS FIRE PROTECTION DISTRICT

2	EACH	LIGHT DETECTOR
1	EACH	LIGHT DETECTOR AMPLIFIER

THE FOLLOWING ITEMS SHALL BE REMOVED BY THE CONTRACTOR AND SHALL BE DISPOSED OF BY THEM OUTSIDE OF THE RIGHT-OF-WAY AT THEIR EXPENSE. THE SALVAGE VALUE OF THE REMOVED EQUIPMENT SHALL BE REFLECTED IN THE CONTRACT BID PRICE.

1	EACH	CONTROLLER AND CABINET (COMPLETE)
4	EACH	MAST ARM ASSEMBLY AND POLE
4	EACH	SIGNAL POST
8	EACH	SIGNAL HEAD, 1-FACE, 3-SECTION
4	EACH	SIGNAL HEAD, 1-FACE, 5-SECTION
8	EACH	TRAFFIC SIGNAL BACKPLATE
2	EACH	PEDESTRIAN SIGNAL HEAD, 1-FACE
2	EACH	PEDESTRIAN PUSHBUTTON
1	EACH	SERVICE INSTALLATION

CONTINUATION OF THE NOTES FOR TEMPORARY TRAFFIC SIGNAL;

6. THE TEMPORARY TRAFFIC SIGNAL SHALL HAVE THE SIGNAL HEAD DISPLAYS, SIGNAL HEAD PLACEMENT AND CONTROLLER PHASING MATCH THE EXISTING TRAFFIC SIGNAL, AT THE TIME OF THE TURN ON, IF NO TRAFFIC STAGING IS IN PLACE OR WILL NOT BE STAGED ON THE DAY OF THE TURN ON.
7. UNINTERRUPTIBLE POWER SUPPLY (UPS) SYSTEMS SHALL BE INSTALLED AND MADE OPERATIONAL AT TEMPORARY TRAFFIC SIGNAL INSTALLATIONS WHERE UPS IS INSTALLED AT THE EXISTING TRAFFIC SIGNAL, TEMPORARY TRAFFIC SIGNALS AT RAILROAD INTERSECTIONS, AND TEMPORARY TRAFFIC SIGNALS AT INTERSECTIONS WITH FIRE STATION ACTUATED EMERGENCY VEHICLE PRE-EMPTION, OR WHEN INDICATED ON THE PLANS.
8. TRAFFIC SIGNAL MANAGEMENT SYSTEMS SHALL BE MAINTAINED IN OPERATION AS INDICATED ON THE PLANS OR AS DIRECTED BY THE ENGINEER. REQUIRED EQUIPMENT SHALL BE AS SHOWN ON THE PLANS AND THE CONTRACTOR SHALL PLACE THE EQUIPMENT IN OPERATION TO THE SATISFACTION OF THE ENGINEER AND THE AGENCY RESPONSIBLE FOR THE TRAFFIC SIGNAL MANAGEMENT SYSTEM.
9. DETECTION AT TEMPORARY TRAFFIC SIGNALS SHALL BE INCLUDED FOR ALL APPROACHES OF THE INTERSECTION UNLESS INDICATED OTHERWISE ON THE PLANS. THE DETECTION SYSTEM MUST MEET THE SPECIFICATIONS OF DISTRICT 1 AND THE CONTRACTOR SHALL PLACE THE DETECTORS INTO OPERATION TO THE SATISFACTION OF THE ENGINEER.
10. WHEN PAN, TILT, ZOOM CAMERAS ARE INSTALLED AT THE EXISTING INTERSECTION OR ARE CALLED FOR IN THE PLANS, THE CONTRACTOR SHALL BE RESPONSIBLE FOR INSTALLING AND MAINTAINING THE CAMERAS TO THE SATISFACTION OF THE ENGINEER AND THE AGENCY RESPONSIBLE FOR THE CAMERAS.

URS
100 S. WACKER DR.
SUITE 500
CHICAGO IL 60606
TEL (312)939-1000
FAX (312)939-4198

FILE NAME = D160M62-SHT-TD12.dgn	USER NAME = Anthony.Plutz	DESIGNED - MRF	REVISED -
		DRAWN - MRF	REVISED -
	PLOT SCALE = 40.0000 ' / in.	CHECKED - MJL	REVISED -
SHT_PLAN	PLOT DATE = 3/13/2013	DATE - 03/13/13	REVISED -

STATE OF ILLINOIS
DEPARTMENT OF TRANSPORTATION

TEMPORARY TRAFFIC SIGNAL INSTALLATION AND REMOVE EXISTING TRAFFIC SIGNAL EQUIPMENT PLAN – PRE-STAGE
US 45 (LAGRANGE ROAD) AND HS ENTRANCE/SOUTHMOOR DRIVE

SCALE: 1"=20' | SHEET 1 OF 6 SHEETS | STA. TO STA.

F.A.P RTE.	SECTION	COUNTY	TOTAL SHEETS	SHEET NO.
330	103R-5	COOK	778	283
	TD-12	CONTRACT NO. 60M62		
		ILLINOIS FED. AID PROJECT		

RESTORATION OF WORK AREA, RESTORATION OF THE TRAFFIC SIGNAL WORK AREA SHALL BE INCIDENTAL TO THE RELATED PAY ITEM SUCH AS FOUNDATION, CONDUIT, HANDHOLE, TRENCH AND BACKFILL, ETC., AND NO EXTRA COMPENSATION SHALL BE ALLOWED. ALL ROADWAY SURFACES SUCH AS SHOULDERS, MEDIANS, SIDEWALKS, PAVEMENT, ETC. SHALL BE REPLACED IN KIND. ALL DAMAGE TO MOWED LAWNS SHALL BE REPLACED WITH AN APPROVED SOD, AND ALL DAMAGE TO UNMOWED FIELDS SHALL BE SEEDED IN ACCORDANCE WITH STANDARD SPECIFICATIONS 252 AND 250 RESPECTIVELY.

NOTE:
THE TRAFFIC SIGNAL CONTROLLER EQUIPMENT FOR THIS PROJECT SHALL BE "EAGLE" TO MATCH THE EXISTING ADJACENT SYSTEM.

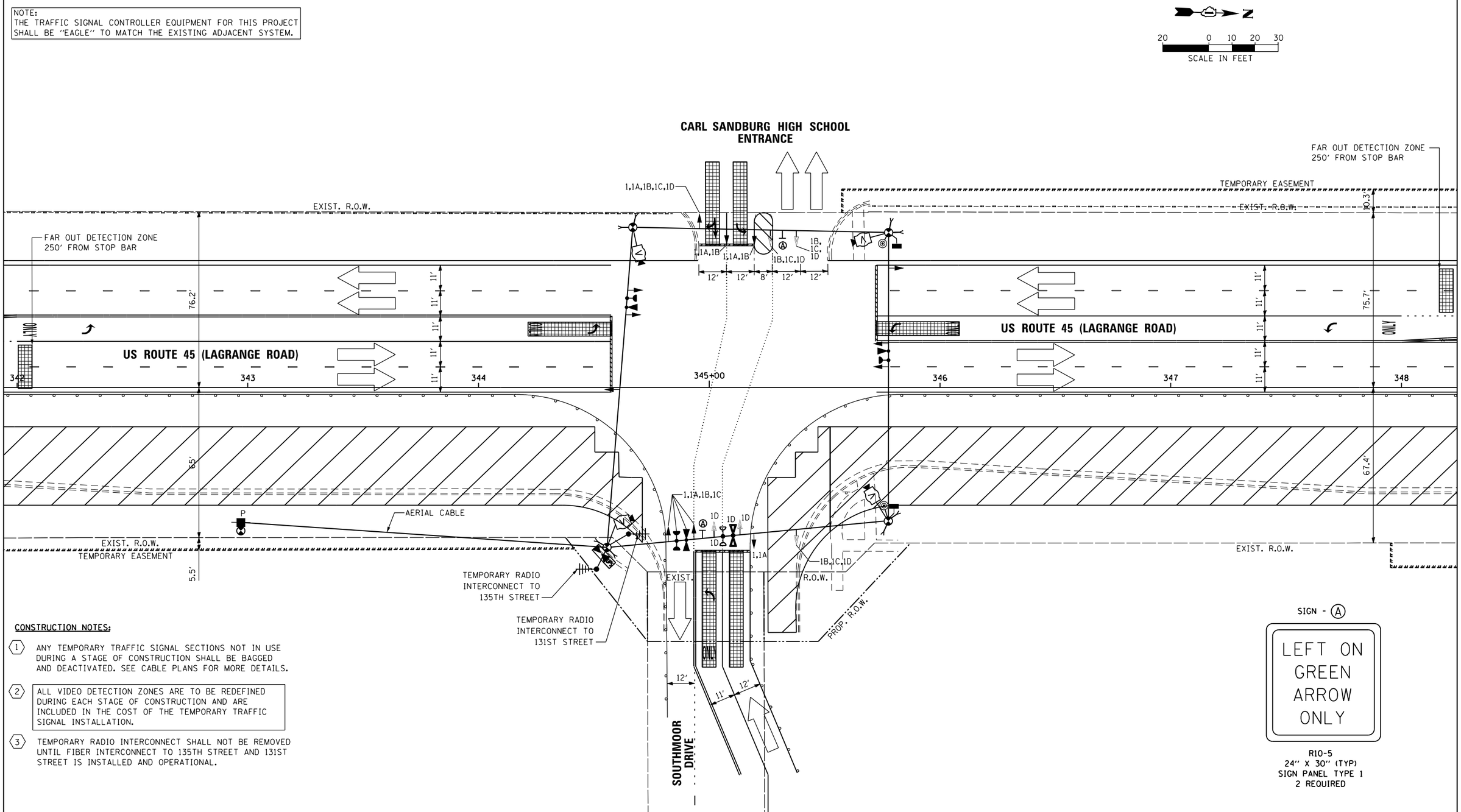

CONSTRUCTION NOTES:

1. ANY TEMPORARY TRAFFIC SIGNAL SECTIONS NOT IN USE DURING A STAGE OF CONSTRUCTION SHALL BE BAGGED AND DEACTIVATED. SEE CABLE PLANS FOR MORE DETAILS.
2. ALL VIDEO DETECTION ZONES ARE TO BE REDEFINED DURING EACH STAGE OF CONSTRUCTION AND ARE INCLUDED IN THE COST OF THE TEMPORARY TRAFFIC SIGNAL INSTALLATION.
3. TEMPORARY RADIO INTERCONNECT SHALL NOT BE REMOVED UNTIL FIBER INTERCONNECT TO 135TH STREET AND 131ST STREET IS INSTALLED AND OPERATIONAL.

SIGN - (A)

LEFT ON GREEN ARROW ONLY

R10-5
24" X 30" (TYP)
SIGN PANEL TYPE 1
2 REQUIRED

URS
100 S. WACKER DR.
SUITE 500
CHICAGO IL 60606
TEL (312)939-1000
FAX (312)939-4968

FILE NAME = D160M62-SHT-TD13.dgn	USER NAME = Anthony.Plutz	DESIGNED - MRF	REVISED -
		DRAWN - MRF	REVISED -
	PLOT SCALE = 40.0000 ' / in.	CHECKED - MJL	REVISED -
SHT_PLAN	PLOT DATE = 3/13/2013	DATE - 03/13/13	REVISED -

STATE OF ILLINOIS
DEPARTMENT OF TRANSPORTATION

TEMPORARY TRAFFIC SIGNAL INSTALLATION – STAGE 1
US 45 (LAGRANGE ROAD) HS ENTRANCE/SOUTHMOOR DRIVE

SCALE: 1"=20' | SHEET 2 OF 6 SHEETS | STA. TO STA.

F.A.P RTE.	SECTION	COUNTY	TOTAL SHEETS	SHEET NO.
330	103R-5	COOK	778	284
	TD-13	CONTRACT NO. 60M62		
		ILLINOIS FED. AID PROJECT		

RESTORATION OF WORK AREA, RESTORATION OF THE TRAFFIC SIGNAL WORK AREA SHALL BE INCIDENTAL TO THE RELATED PAY ITEM SUCH AS FOUNDATION, CONDUIT, HANDHOLE, TRENCH AND BACKFILL, ETC., AND NO EXTRA COMPENSATION SHALL BE ALLOWED. ALL ROADWAY SURFACES SUCH AS SHOULDERS, MEDIANS, SIDEWALKS, PAVEMENT, ETC. SHALL BE REPLACED IN KIND. ALL DAMAGE TO MOWED LAWNS SHALL BE REPLACED WITH AN APPROVED SOD, AND ALL DAMAGE TO UNMOWED FIELDS SHALL BE SEEDED IN ACCORDANCE WITH STANDARD SPECIFICATIONS 252 AND 250 RESPECTIVELY.

NOTE:
THE TRAFFIC SIGNAL CONTROLLER EQUIPMENT FOR THIS PROJECT SHALL BE "EAGLE" TO MATCH THE EXISTING ADJACENT SYSTEM.

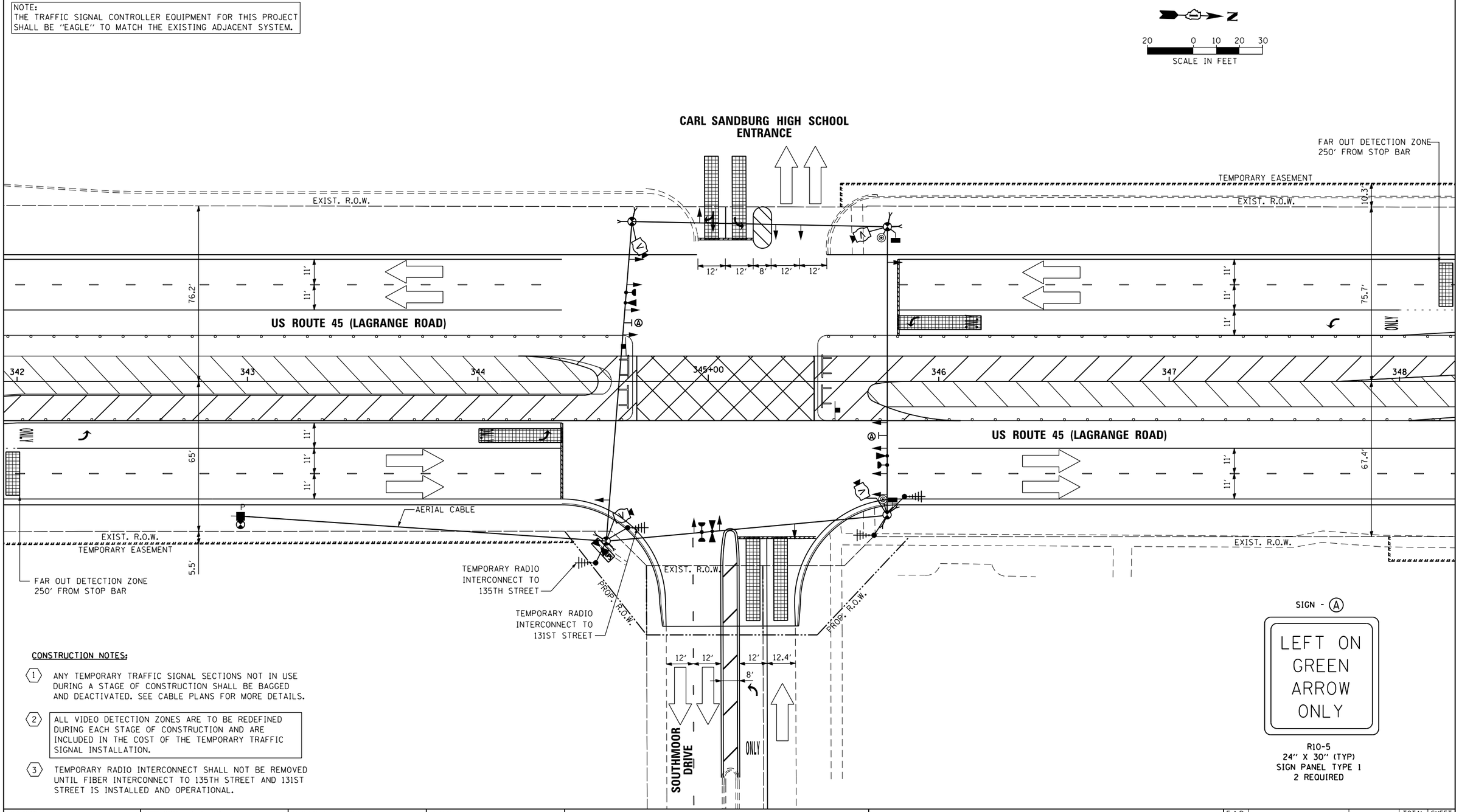

SIGN - (A)

LEFT ON GREEN ARROW ONLY

R10-5
24" X 30" (TYP)
SIGN PANEL TYPE 1
2 REQUIRED

CONSTRUCTION NOTES:

(1) ANY TEMPORARY TRAFFIC SIGNAL SECTIONS NOT IN USE DURING A STAGE OF CONSTRUCTION SHALL BE BAGGED AND DEACTIVATED. SEE CABLE PLANS FOR MORE DETAILS.

(2) ALL VIDEO DETECTION ZONES ARE TO BE REDEFINED DURING EACH STAGE OF CONSTRUCTION AND ARE INCLUDED IN THE COST OF THE TEMPORARY TRAFFIC SIGNAL INSTALLATION.

(3) TEMPORARY RADIO INTERCONNECT SHALL NOT BE REMOVED UNTIL FIBER INTERCONNECT TO 135TH STREET AND 131ST STREET IS INSTALLED AND OPERATIONAL.

URS
100 S. WACKER DR.
SUITE 500
CHICAGO, IL 60606
TEL (312)939-1000
FAX (312)939-4498

FILE NAME = D160M62-SHT-TD14.dgn	USER NAME = Anthony.Plutz	DESIGNED - MRF	REVISED -
		DRAWN - MRF	REVISED -
	PLOT SCALE = 40.0000 ' / in.	CHECKED - MJL	REVISED -
SHT_PLAN	PLOT DATE = 3/13/2013	DATE - 03/13/13	REVISED -

STATE OF ILLINOIS
DEPARTMENT OF TRANSPORTATION

TEMPORARY TRAFFIC SIGNAL INSTALLATION – STAGE 2
US 45 (LAGRANGE ROAD) AND HS ENTRANCE/SOUTHMOOR DRIVE

SCALE: 1"=20' | SHEET 3 OF 6 SHEETS | STA. TO STA.

F.A.P RTE.	SECTION	COUNTY	TOTAL SHEETS	SHEET NO.
330	103R-5	COOK	778	285
	TD-14	CONTRACT NO. 60M62		
		ILLINOIS FED. AID PROJECT		

RESTORATION OF WORK AREA, RESTORATION OF THE TRAFFIC SIGNAL WORK AREA SHALL BE INCIDENTAL TO THE RELATED PAY ITEM SUCH AS FOUNDATION, CONDUIT, HANDHOLE, TRENCH AND BACKFILL, ETC., AND NO EXTRA COMPENSATION SHALL BE ALLOWED. ALL ROADWAY SURFACES SUCH AS SHOULDERS, MEDIANS, SIDEWALKS, PAVEMENT, ETC. SHALL BE REPLACED IN KIND. ALL DAMAGE TO MOWED LAWNS SHALL BE REPLACED WITH AN APPROVED SOD, AND ALL DAMAGE TO UNMOWED FIELDS SHALL BE SEEDED IN ACCORDANCE WITH STANDARD SPECIFICATIONS 252 AND 250 RESPECTIVELY.

NOTE:
THE TRAFFIC SIGNAL CONTROLLER EQUIPMENT FOR THIS PROJECT SHALL BE "EAGLE" TO MATCH THE EXISTING ADJACENT SYSTEM.

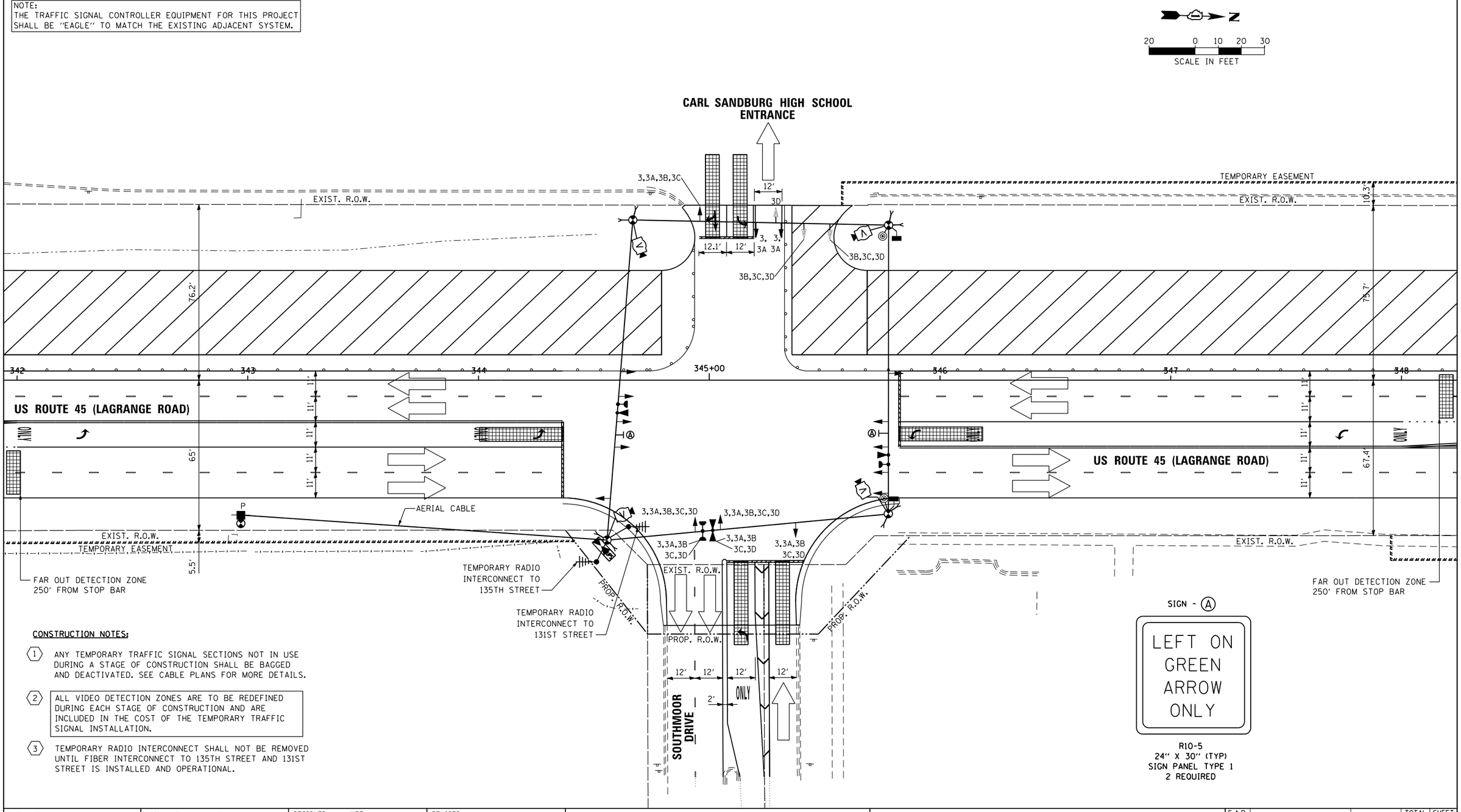

CONSTRUCTION NOTES:

1. ANY TEMPORARY TRAFFIC SIGNAL SECTIONS NOT IN USE DURING A STAGE OF CONSTRUCTION SHALL BE BAGGED AND DEACTIVATED. SEE CABLE PLANS FOR MORE DETAILS.

2. ALL VIDEO DETECTION ZONES ARE TO BE REDEFINED DURING EACH STAGE OF CONSTRUCTION AND ARE INCLUDED IN THE COST OF THE TEMPORARY TRAFFIC SIGNAL INSTALLATION.

3. TEMPORARY RADIO INTERCONNECT SHALL NOT BE REMOVED UNTIL FIBER INTERCONNECT TO 135TH STREET AND 131ST STREET IS INSTALLED AND OPERATIONAL.

URS
100 S. WACKER DR.
SUITE 500
CHICAGO IL 60606
TEL (312)939-1000
FAX (312)939-4498

FILE NAME = D160M62-SHT-TD15.dgn	USER NAME = Anthony.Plutz	DESIGNED - MRF	REVISED -	STATE OF ILLINOIS DEPARTMENT OF TRANSPORTATION	TEMPORARY TRAFFIC SIGNAL INSTALLATION – STAGE 3 US 45 (LAGRANGE ROAD) AND HS ENTRANCE/SOUTHMOOR DRIVE
		DRAWN - MRF	REVISED -		
	PLOT SCALE = 40.0000 ' / in.	CHECKED - MJL	REVISED -		
SHT_PLAN	PLOT DATE = 3/13/2013	DATE - 03/13/13	REVISED -		SCALE: 1"=20' SHEET 4 OF 6 SHEETS STA. TO STA.

F.A.P RTE.	SECTION	COUNTY	TOTAL SHEETS	SHEET NO.
330	103R-5	COOK	778	286
TD-15		CONTRACT NO. 60M62		
		ILLINOIS FED. AID PROJECT		

RESTORATION OF WORK AREA, RESTORATION OF THE TRAFFIC SIGNAL WORK AREA SHALL BE INCIDENTAL TO THE RELATED PAY ITEM SUCH AS FOUNDATION, CONDUIT, HANDHOLE, TRENCH AND BACKFILL, ETC., AND NO EXTRA COMPENSATION SHALL BE ALLOWED. ALL ROADWAY SURFACES SUCH AS SHOULDERS, MEDIANS, SIDEWALKS, PAVEMENT, ETC. SHALL BE REPLACED IN KIND. ALL DAMAGE TO MOWED LAWNS SHALL BE REPLACED WITH AN APPROVED SOD, AND ALL DAMAGE TO UNMOWED FIELDS SHALL BE SEEDED IN ACCORDANCE WITH STANDARD SPECIFICATIONS 252 AND 250 RESPECTIVELY.

NOTE:
THE TRAFFIC SIGNAL CONTROLLER EQUIPMENT FOR THIS PROJECT SHALL BE "EAGLE" TO MATCH THE EXISTING ADJACENT SYSTEM.

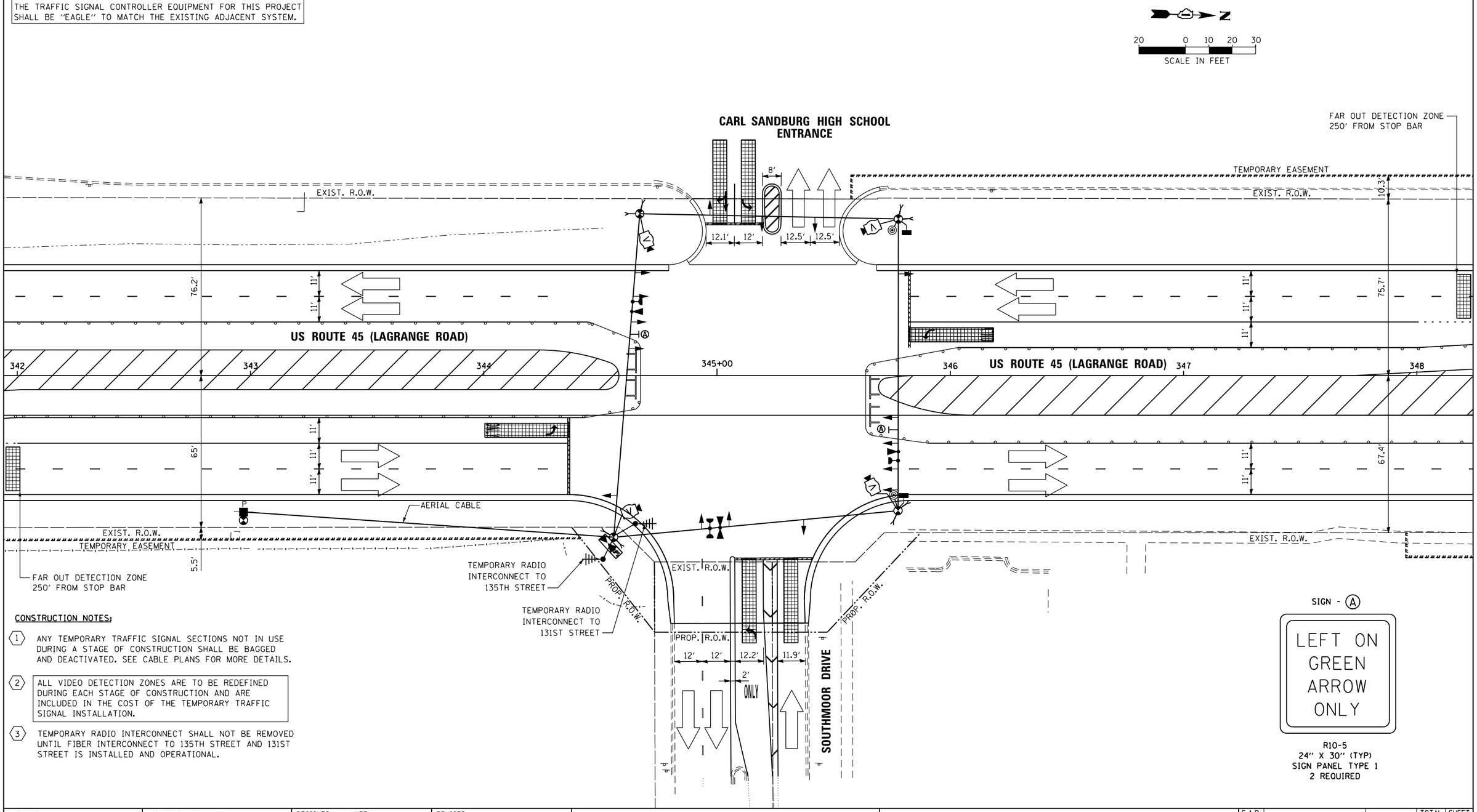

CONSTRUCTION NOTES:

1. ANY TEMPORARY TRAFFIC SIGNAL SECTIONS NOT IN USE DURING A STAGE OF CONSTRUCTION SHALL BE BAGGED AND DEACTIVATED. SEE CABLE PLANS FOR MORE DETAILS.

2. ALL VIDEO DETECTION ZONES ARE TO BE REDEFINED DURING EACH STAGE OF CONSTRUCTION AND ARE INCLUDED IN THE COST OF THE TEMPORARY TRAFFIC SIGNAL INSTALLATION.

3. TEMPORARY RADIO INTERCONNECT SHALL NOT BE REMOVED UNTIL FIBER INTERCONNECT TO 135TH STREET AND 131ST STREET IS INSTALLED AND OPERATIONAL.

URS
100 S. WACKER DR.
SUITE 500
CHICAGO IL 60606
TEL (312)-939-1000
FAX (312)-939-4498

FILE NAME = D160M62-SHT-TD16.dgn	USER NAME = Anthony.Plutz	DESIGNED - MRF	REVISED -
		DRAWN - MRF	REVISED -
	PLOT SCALE = 40.0000 ' / in.	CHECKED - MJL	REVISED -
SHT_PLAN	PLOT DATE = 3/13/2013	DATE - 03/13/13	REVISED -

STATE OF ILLINOIS
DEPARTMENT OF TRANSPORTATION

TEMPORARY TRAFFIC SIGNAL INSTALLATION – STAGE 4
US 45 (LAGRANGE ROAD) AND HS ENTRANCE/SOUTHMOOR DRIVE

SCALE: 1"=20' | SHEET 5 OF 6 SHEETS | STA. TO STA.

F.A.P RTE.	SECTION	COUNTY	TOTAL SHEETS	SHEET NO.
330	103R-5	COOK	778	287
	TD-16	CONTRACT NO. 60M62		
		ILLINOIS FED. AID PROJECT		

RESTORATION OF WORK AREA, RESTORATION OF THE TRAFFIC SIGNAL WORK AREA SHALL BE INCIDENTAL TO THE RELATED PAY ITEM SUCH AS FOUNDATION, CONDUIT, HANDHOLE, TRENCH AND BACKFILL, ETC., AND NO EXTRA COMPENSATION SHALL BE ALLOWED. ALL ROADWAY SURFACES SUCH AS SHOULDERS, MEDIANS, SIDEWALKS, PAVEMENT, ETC. SHALL BE REPLACED IN KIND. ALL DAMAGE TO MOWED LAWNS SHALL BE REPLACED WITH AN APPROVED SOD, AND ALL DAMAGE TO UNMOWED FIELDS SHALL BE SEEDED IN ACCORDANCE WITH STANDARD SPECIFICATIONS 252 AND 250 RESPECTIVELY.

NOTE:
THE TRAFFIC SIGNAL CONTROLLER EQUIPMENT FOR THIS PROJECT SHALL BE "EAGLE" TO MATCH THE EXISTING ADJACENT SYSTEM.

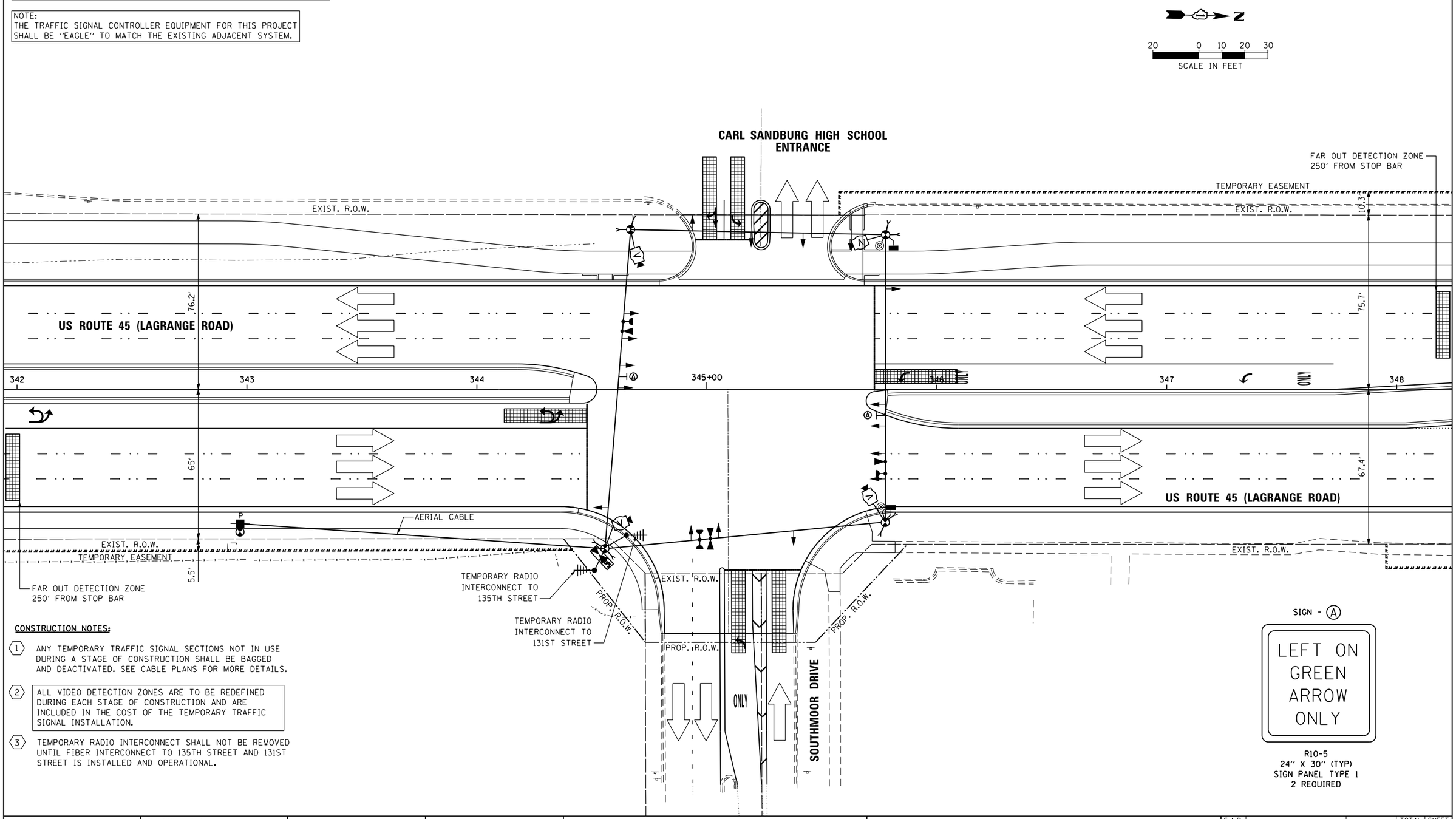

CONSTRUCTION NOTES:

1. ANY TEMPORARY TRAFFIC SIGNAL SECTIONS NOT IN USE DURING A STAGE OF CONSTRUCTION SHALL BE BAGGED AND DEACTIVATED. SEE CABLE PLANS FOR MORE DETAILS.
2. ALL VIDEO DETECTION ZONES ARE TO BE REDEFINED DURING EACH STAGE OF CONSTRUCTION AND ARE INCLUDED IN THE COST OF THE TEMPORARY TRAFFIC SIGNAL INSTALLATION.
3. TEMPORARY RADIO INTERCONNECT SHALL NOT BE REMOVED UNTIL FIBER INTERCONNECT TO 135TH STREET AND 131ST STREET IS INSTALLED AND OPERATIONAL.

SIGN - (A)

LEFT ON GREEN ARROW ONLY

R10-5
24" X 30" (TYP)
SIGN PANEL TYPE 1
2 REQUIRED

URS
100 S. WACKER DR.
SUITE 500
CHICAGO IL 60606
TEL (312)939-1000
FAX (312)939-9498

FILE NAME = D160M62-SHT-TD17.dgn	USER NAME = Anthony.Plutz	DESIGNED - MRF	REVISED -
		DRAWN - MRF	REVISED -
	PLOT SCALE = 40.0000 ' / in.	CHECKED - MJL	REVISED -
SHT_PLAN	PLOT DATE = 3/13/2013	DATE - 03/13/13	REVISED -

STATE OF ILLINOIS
DEPARTMENT OF TRANSPORTATION

TEMPORARY TRAFFIC SIGNAL INSTALLATION – FINAL GEOMETRICS
US 45 (LAGRANGE ROAD) AND HS ENTRANCE/SOUTHMOOR DRIVE

SCALE: 1"=20' | SHEET 6 OF 6 SHEETS | STA. | TO STA.

F.A.P RTE.	SECTION	COUNTY	TOTAL SHEETS	SHEET NO.
330	103R-5	COOK	778	288
	TD-17	CONTRACT NO. 60M62		
		ILLINOIS FED. AID PROJECT		

TEMPORARY CONTROLLER SEQUENCE

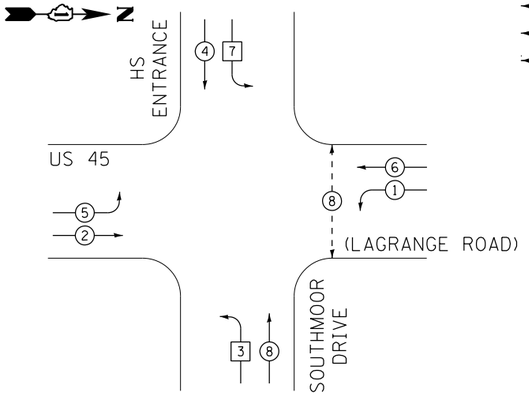

PHASE DESIGNATION DIAGRAM LEGEND

- DUAL ENTRY PHASE
- SINGLE ENTRY PHASE
- PEDESTRIAN PHASE
- NUMBER REFERS TO ASSOCIATED PHASE

TEMPORARY PHASE DESIGNATION DIAGRAM

TEMPORARY EMERGENCY VEHICLE PREEMPTION SEQUENCE

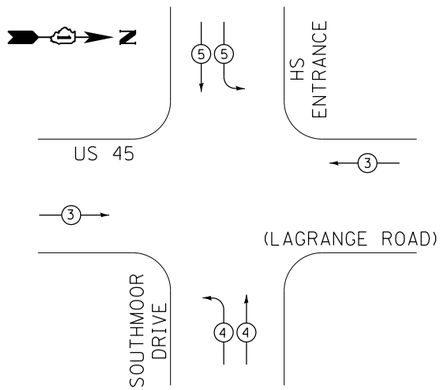

TEMPORARY EMERGENCY VEHICLE PREEMPTORS			
EMERGENCY VEHICLE PREEMPTORS	3	4	5
MOVEMENT			

I.D.O.T. TRAFFIC SIGNAL INSTALLATION ELECTRICAL SERVICE REQUIREMENTS					TOTAL WATTAGE
TYPE	NO. OF LAMPS	WATTAGE INCAND.	LED	% OPERATION	
SIGNAL (RED)	14		17	0.50	119.0
(YELLOW)	14		25	0.25	87.5
(GREEN)	14		15	0.25	52.5
ARROW	16		12	0.10	19.2
PED. SIGNAL	2		25	1.00	50.0
CONTROLLER	1		100	1.00	100.0
ILLUM. SIGN	--		25	0.05	0.0
VIDEO SYSTEM	1		150	1.00	150.0
FLASHER			25	0.50	
ENERGY COST TO:				TOTAL=	578.2

66.7% CARL SANDBURG H.S.
13300 SOUTH LAGRANGE RD.

33.3% VILLAGE OF ORLAND PARK
14700 SOUTH RAVINIA AVE.

ENERGY SUPPLY: CONTACT: KATHRYN SUGRUE
PHONE: (708) 235-2337
COMPANY: COMMONWEALTH EDISON

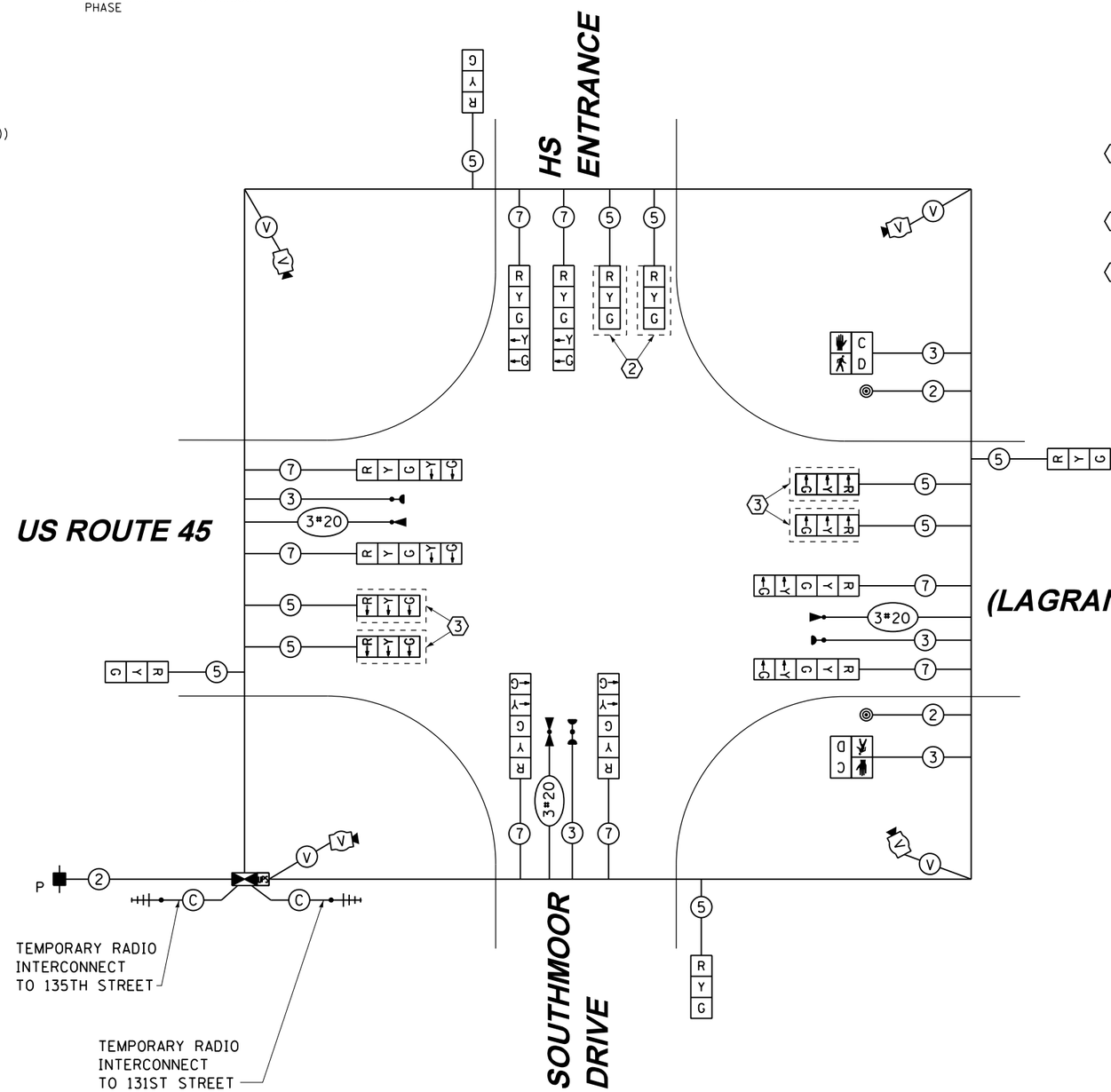

TEMPORARY CABLE PLAN
PRE–STAGE, STAGE 1, 1A, 1B, 1C & 1D

CONSTRUCTION NOTES:

1. TEMPORARY RADIO INTERCONNECT SHALL NOT BE REMOVED UNTIL FIBER INTERCONNECT TO 135TH STREET AND 131ST STREET INTERSECTIONS ARE INSTALLED AND OPERATIONAL.
2. BAG AND DEACTIVATE SIGNAL SECTION DURING ALL STAGES EXCEPT STAGE 1B.
3. BAG AND DEACTIVATE SIGNAL SECTION DURING PRE-STAGE AND STAGES 1, 1A, 1B, 1C, AND 1D.

RESTORATION OF WORK AREA. RESTORATION OF THE TRAFFIC SIGNAL WORK AREA SHALL BE INCIDENTAL TO THE RELATED PAY ITEM SUCH AS FOUNDATION, CONDUIT, HANDHOLE, TRENCH AND BACKFILL, ETC., AND NO EXTRA COMPENSATION SHALL BE ALLOWED. ALL ROADWAY SURFACES SUCH AS SHOULDERS, MEDIANS, SIDEWALKS, PAVEMENT, ETC. SHALL BE REPLACED IN KIND. ALL DAMAGE TO MOWED LAWNS SHALL BE REPLACED WITH AN APPROVED SOD, AND ALL DAMAGE TO UNMOWED FIELDS SHALL BE SEEDED IN ACCORDANCE WITH STANDARD SPECIFICATIONS 252 AND 250 RESPECTIVELY.

NOTE:
THE TRAFFIC SIGNAL CONTROLLER EQUIPMENT FOR THIS PROJECT SHALL BE "EAGLE" TO MATCH THE EXISTING ADJACENT SYSTEM.

URS
100 S. WACKER DR.
SUITE 500
CHICAGO IL 60606
TEL (312)939-1000
FAX (312)939-4189

FILE NAME = D160M62-SHT-TD18.dgn	USER NAME = Anthony.Plutz	DESIGNED - MRF	REVISED -	STATE OF ILLINOIS DEPARTMENT OF TRANSPORTATION
		DRAWN - MRF	REVISED -	
	PLOT SCALE = 40.0000 ' / in.	CHECKED - MJL	REVISED -	
SHT_PLAN	PLOT DATE = 3/13/2013	DATE - 03/13/13	REVISED -	

TEMPORARY CABLE PLAN, TEMPORARY PHASE DESIGNATION DIAGRAM & EMERGENCY VEHICLE PREEMPTION SEQUENCE US 45 (LAGRANGE ROAD) AND HS ENTRANCE/SOUTHMOOR DRIVE – PRE–STAGE, STAGE 1, 1A, 1B, 1C & 1D

SCALE: N.T.S. | SHEET 1 OF 2 SHEETS | STA. TO STA.

F.A.P RTE.	SECTION	COUNTY	TOTAL SHEETS	SHEET NO.
330	103R-5	COOK	778	289
	TD–18	CONTRACT NO. 60M62		
		ILLINOIS FED. AID PROJECT		

TEMPORARY CONTROLLER SEQUENCE

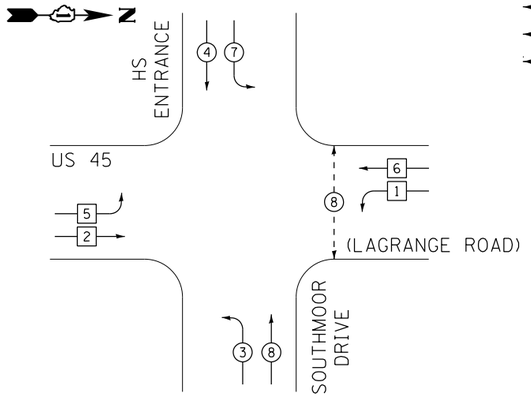

TEMPORARY PHASE DESIGNATION DIAGRAM

TEMPORARY EMERGENCY VEHICLE PREEMPTION SEQUENCE

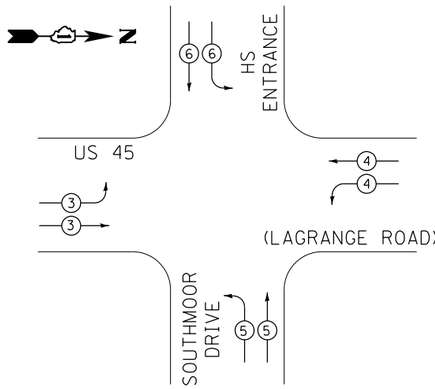

PHASE DESIGNATION DIAGRAM LEGEND

- DUAL ENTRY PHASE
- SINGLE ENTRY PHASE
- PEDESTRIAN PHASE
- NUMBER REFERS TO ASSOCIATED PHASE

FOR PHASES 1, 2, 5, & 6 IN THE PHASE DESIGNATION DIAGRAM SHOWN AT THE LEFT, THE FOLLOWING PHASE SEQUENCE SHALL BE FOLLOWED DURING STAGES 2 AND 4:

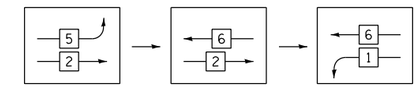

PHASES 3, 4, 7, & 8 SHALL FOLLOW THE STANDARD SEQUENCE IN ACCORDANCE WITH STATE STANDARD 857001

CONSTRUCTION NOTES:

1. TEMPORARY RADIO INTERCONNECT SHALL NOT BE REMOVED UNTIL FIBER INTERCONNECT TO 135TH STREET AND 131ST STREET INTERSECTIONS ARE INSTALLED AND OPERATIONAL.
2. BAG AND DEACTIVATE SIGNAL SECTION DURING STAGES 2, 3, 4 AND FINAL GEOMETRICS

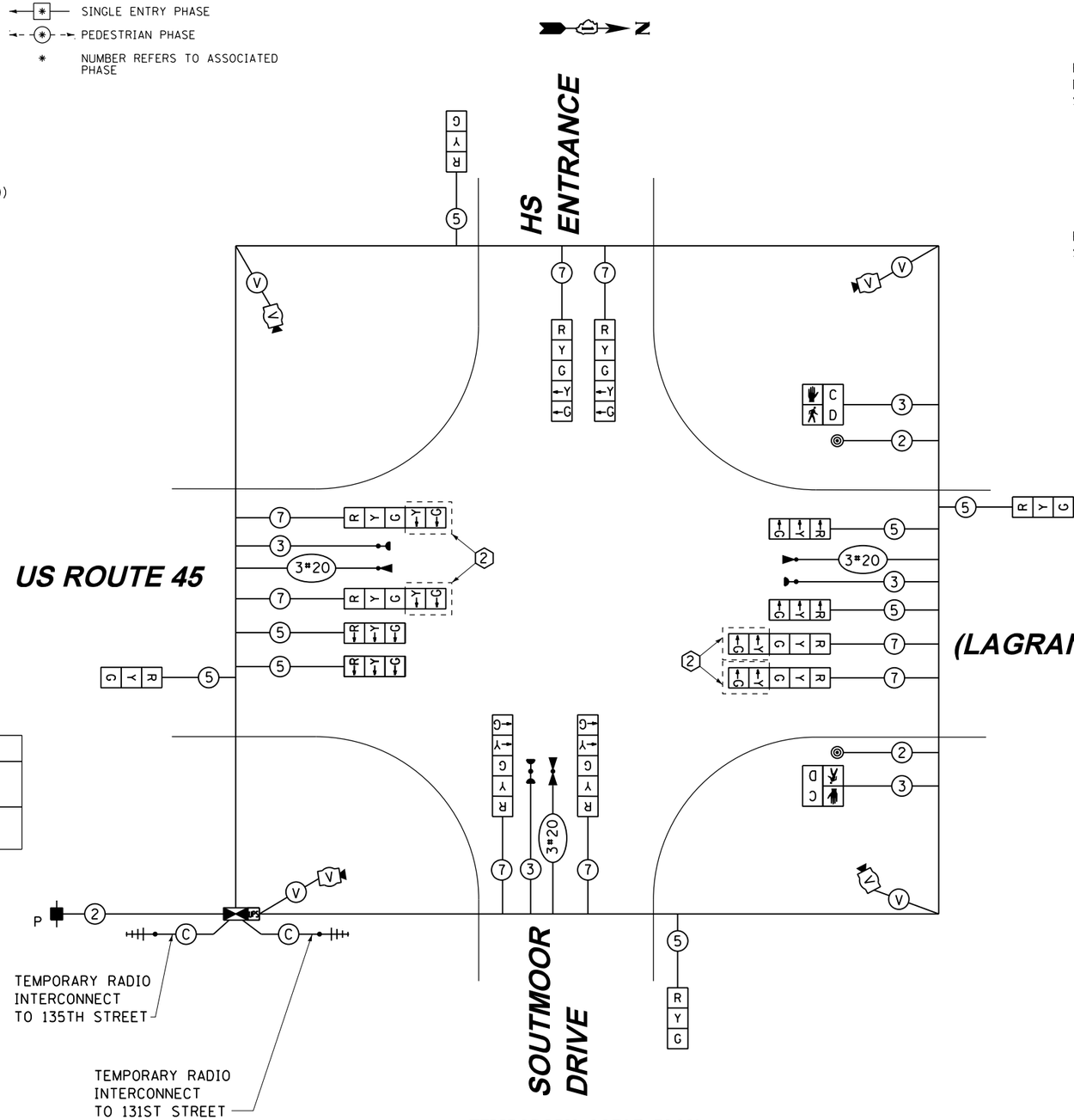

TEMPORARY CABLE PLAN
STAGE 2, 3, 4 & FINAL GEOMETRICS

TEMPORARY EMERGENCY VEHICLE PREEMPTORS				
EMERGENCY VEHICLE PREEMPTORS	3	4	5	6
MOVEMENT				

I.D.O.T. TRAFFIC SIGNAL INSTALLATION ELECTRICAL SERVICE REQUIREMENTS					TOTAL WATTAGE
TYPE	NO. OF LAMPS	WATTAGE INCAND.	WATTAGE LED	% OPERATION	
SIGNAL (RED)	16		17	0.50	136.0
(YELLOW)	16		25	0.25	100.0
(GREEN)	16		15	0.25	60.0
ARROW	8		12	0.10	9.6
PED. SIGNAL	2		25	1.00	50.0
CONTROLLER	1		100	1.00	100.0
ILLUM. SIGN	--		25	0.05	0.0
VIDEO SYSTEM	1		150	1.00	150.0
FLASHER			25	0.50	
ENERGY COST TO:				TOTAL=	605.6

66.7% CARL SANDBURG H.S.
13300 SOUTH LAGRANGE RD.

33.3% VILLAGE OF ORLAND PARK
14700 SOUTH RAVINIA AVE.

ENERGY SUPPLY: CONTACT: KATHRYN SUGRUE
PHONE: (708) 235-2337
COMPANY: COMMONWEALTH EDISON

RESTORATION OF WORK AREA. RESTORATION OF THE TRAFFIC SIGNAL WORK AREA SHALL BE INCIDENTAL TO THE RELATED PAY ITEM SUCH AS FOUNDATION, CONDUIT, HANDHOLE, TRENCH AND BACKFILL, ETC., AND NO EXTRA COMPENSATION SHALL BE ALLOWED. ALL ROADWAY SURFACES SUCH AS SHOULDERS, MEDIANS, SIDEWALKS, PAVEMENT, ETC. SHALL BE REPLACED IN KIND. ALL DAMAGE TO MOWED LAWNS SHALL BE REPLACED WITH AN APPROVED SOD, AND ALL DAMAGE TO UNMOWED FIELDS SHALL BE SEEDED IN ACCORDANCE WITH STANDARD SPECIFICATIONS 252 AND 250 RESPECTIVELY.

NOTE:
THE TRAFFIC SIGNAL CONTROLLER EQUIPMENT FOR THIS PROJECT SHALL BE "EAGLE" TO MATCH THE EXISTING ADJACENT SYSTEM.

URS
100 S. WACKER DR.
SUITE 500
CHICAGO IL 60606
TEL (312)939-1000
FAX (312)939-4198

FILE NAME = D160M62-SHT-TD19.dgn	USER NAME = Anthony.Plutz	DESIGNED - MRF	REVISED -
		DRAWN - MRF	REVISED -
	PLOT SCALE = 40.0000 ' / in.	CHECKED - MJL	REVISED -
SHT_PLAN	PLOT DATE = 3/13/2013	DATE - 03/13/13	REVISED -

STATE OF ILLINOIS
DEPARTMENT OF TRANSPORTATION

TEMPORARY CABLE PLAN, TEMPORARY PHASE DESIGNATION DIAGRAM AND EMERGENCY VEHICLE PREEMPTION SEQUENCE
US 45 (LAGRANGE ROAD) AND HS ENTRANCE/SOUTHMOOR DRIVE – STAGE 2, 3, 4 & FINAL GEOMETRICS

SCALE: N.T.S. SHEET 2 OF 2 SHEETS STA. TO STA.

F.A.P RTE.	SECTION	COUNTY	TOTAL SHEETS	SHEET NO.
330	103R-5	COOK	778	290
	TD-19	CONTRACT NO. 60M62		
		ILLINOIS FED. AID PROJECT		

RESTORATION OF WORK AREA, RESTORATION OF THE TRAFFIC SIGNAL WORK AREA SHALL BE INCIDENTAL TO THE RELATED PAY ITEM SUCH AS FOUNDATION, CONDUIT, HANDHOLE, TRENCH AND BACKFILL, ETC., AND NO EXTRA COMPENSATION SHALL BE ALLOWED. ALL ROADWAY SURFACES SUCH AS SHOULDERS, MEDIANS, SIDEWALKS, PAVEMENT, ETC. SHALL BE REPLACED IN KIND. ALL DAMAGE TO MOWED LAWNS SHALL BE REPLACED WITH AN APPROVED SOD, AND ALL DAMAGE TO UNMOWED FIELDS SHALL BE SEEDED IN ACCORDANCE WITH STANDARD SPECIFICATIONS 252 AND 250 RESPECTIVELY.

NOTE:
THE TRAFFIC SIGNAL CONTROLLER EQUIPMENT FOR THIS PROJECT SHALL BE "EAGLE" TO MATCH THE EXISTING ADJACENT SYSTEM.

NOTE:
GALVANIZED STEEL CONDUIT IDENTIFIED AS IN TRENCH (T) OR PUSHED (P) IS SHOWN FOR INFORMATION ONLY. ALL UNDERGROUND CONDUIT SHALL BE PAID FOR AT THE CONTRACT UNIT PRICE PER FOOT FOR UNDERGROUND CONDUIT, OF THE TYPE AND SIZE SPECIFIED, REGARDLESS OF THE METHOD OF INSTALLATION.

NOTE:
NEW PERMANENT SERVICE INSTALLATIONS WITH ILLUMINATED SIGNS AND/OR COMBINATION MAST ARM SIGNAL POLES SHALL BE METERED.

NOTE:
ALL TRAFFIC SIGNAL POLES, MAST ARM ASSEMBLIES, SIGNAL/PEDESTRIAN HEADS AND HOUSINGS, MOUNTING BRACKETS/PLATES/BOLTS, PEDESTRIAN PUSH BUTTONS, CONTROLLER CABINETS, AND ILLUMINATED SIGNS WITHIN THE VILLAGE OF ORLAND PARK SHALL BE PAINTED BLACK, IN ACCORDANCE WITH THE SPECIAL PROVISIONS.

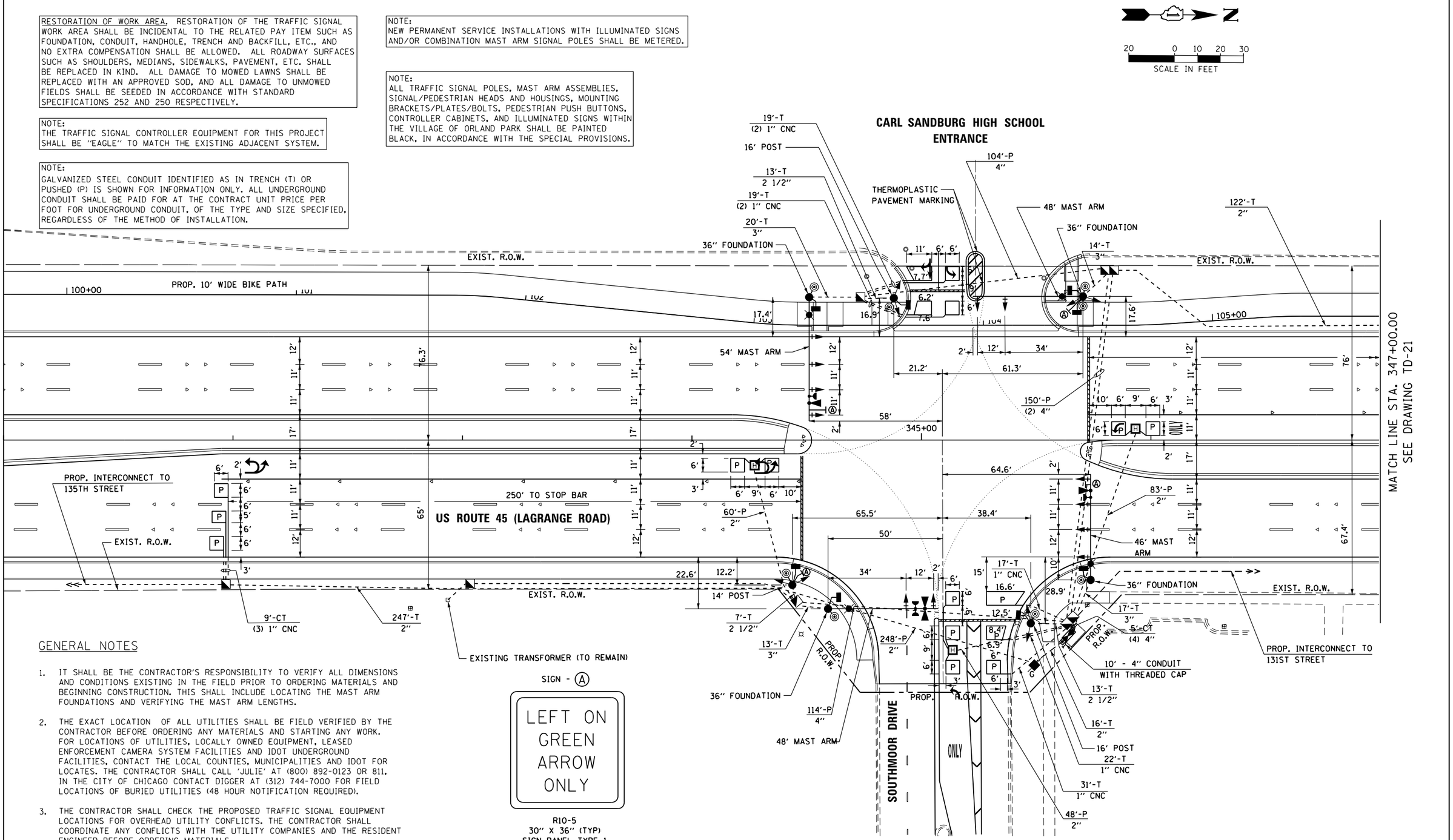

GENERAL NOTES

1. IT SHALL BE THE CONTRACTOR'S RESPONSIBILITY TO VERIFY ALL DIMENSIONS AND CONDITIONS EXISTING IN THE FIELD PRIOR TO ORDERING MATERIALS AND BEGINNING CONSTRUCTION. THIS SHALL INCLUDE LOCATING THE MAST ARM FOUNDATIONS AND VERIFYING THE MAST ARM LENGTHS.

2. THE EXACT LOCATION OF ALL UTILITIES SHALL BE FIELD VERIFIED BY THE CONTRACTOR BEFORE ORDERING ANY MATERIALS AND STARTING ANY WORK. FOR LOCATIONS OF UTILITIES, LOCALLY OWNED EQUIPMENT, LEASED ENFORCEMENT CAMERA SYSTEM FACILITIES AND IDOT UNDERGROUND FACILITIES, CONTACT THE LOCAL COUNTIES, MUNICIPALITIES AND IDOT FOR LOCATES. THE CONTRACTOR SHALL CALL 'JULIE' AT (800) 892-0123 OR 811, IN THE CITY OF CHICAGO CONTACT DIGGER AT (312) 744-7000 FOR FIELD LOCATIONS OF BURIED UTILITIES (48 HOUR NOTIFICATION REQUIRED).

3. THE CONTRACTOR SHALL CHECK THE PROPOSED TRAFFIC SIGNAL EQUIPMENT LOCATIONS FOR OVERHEAD UTILITY CONFLICTS. THE CONTRACTOR SHALL COORDINATE ANY CONFLICTS WITH THE UTILITY COMPANIES AND THE RESIDENT ENGINEER BEFORE ORDERING MATERIALS.

4. THE CONTRACTOR SHALL COORDINATE CONSTRUCTION ACTIVITIES WITH UTILITY COMPANIES, LOCAL GOVERNMENT AGENCIES AND IDOT.

URS
100 S. WACKER DR.
SUITE 500
CHICAGO IL 60606
TEL (312)-939-1000
FAX (312)-939-9498

FILE NAME = D160M62-SHT-TD20.dgn	USER NAME = Anthony.Plutz	DESIGNED - MRF	REVISED -	STATE OF ILLINOIS DEPARTMENT OF TRANSPORTATION	TRAFFIC SIGNAL INSTALLATION PLAN US 45 (LAGRANGE ROAD) AND CARL SANDBURG HS ENTRANCE/SOUTHMOOR DRIVE	F.A.P RTE. 330	SECTION 103R-5	COUNTY COOK	TOTAL SHEETS 778 / SHEET NO. 291
		DRAWN - MRF	REVISED -			TD-20		CONTRACT NO. 60M62	
	PLOT SCALE = 40.000000 ' / in.	CHECKED - MJL	REVISED -			ILLINOIS FED. AID PROJECT			
SHT_PLAN	PLOT DATE = 3/13/2013	DATE - 03/13/13	REVISED -		SCALE: 1"=20' SHEET 1 OF 2 SHEETS STA. TO STA.				

RESTORATION OF WORK AREA. RESTORATION OF THE TRAFFIC SIGNAL WORK AREA SHALL BE INCIDENTAL TO THE RELATED PAY ITEM SUCH AS FOUNDATION, CONDUIT, HANDHOLE, TRENCH AND BACKFILL, ETC., AND NO EXTRA COMPENSATION SHALL BE ALLOWED. ALL ROADWAY SURFACES SUCH AS SHOULDERS, MEDIANS, SIDEWALKS, PAVEMENT, ETC. SHALL BE REPLACED IN KIND. ALL DAMAGE TO MOWED LAWNS SHALL BE REPLACED WITH AN APPROVED SOD, AND ALL DAMAGE TO UNMOWED FIELDS SHALL BE SEEDED IN ACCORDANCE WITH STANDARD SPECIFICATIONS 252 AND 250 RESPECTIVELY.

NOTE:
THE TRAFFIC SIGNAL CONTROLLER EQUIPMENT FOR THIS PROJECT SHALL BE "EAGLE" TO MATCH THE EXISTING ADJACENT SYSTEM.

NOTE:
GALVANIZED STEEL CONDUIT IDENTIFIED AS IN TRENCH (T) OR PUSHED (P) IS SHOWN FOR INFORMATION ONLY. ALL UNDERGROUND CONDUIT SHALL BE PAID FOR AT THE CONTRACT UNIT PRICE PER FOOT FOR UNDERGROUND CONDUIT, OF THE TYPE AND SIZE SPECIFIED, REGARDLESS OF THE METHOD OF INSTALLATION.

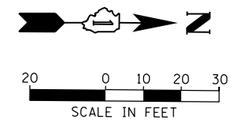

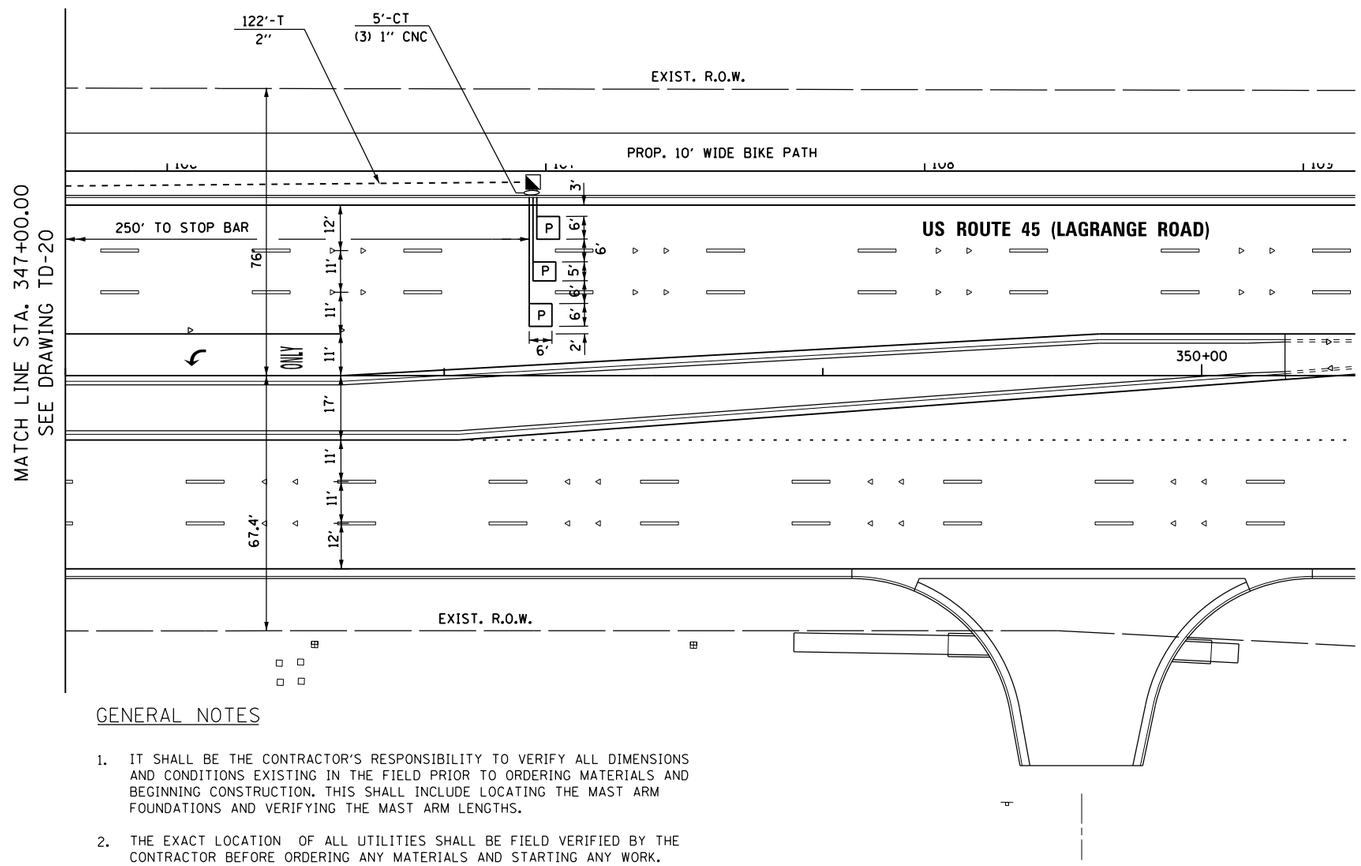

GENERAL NOTES

1. IT SHALL BE THE CONTRACTOR'S RESPONSIBILITY TO VERIFY ALL DIMENSIONS AND CONDITIONS EXISTING IN THE FIELD PRIOR TO ORDERING MATERIALS AND BEGINNING CONSTRUCTION. THIS SHALL INCLUDE LOCATING THE MAST ARM FOUNDATIONS AND VERIFYING THE MAST ARM LENGTHS.

2. THE EXACT LOCATION OF ALL UTILITIES SHALL BE FIELD VERIFIED BY THE CONTRACTOR BEFORE ORDERING ANY MATERIALS AND STARTING ANY WORK. FOR LOCATIONS OF UTILITIES, LOCALLY OWNED EQUIPMENT, LEASED ENFORCEMENT CAMERA SYSTEM FACILITIES AND IDOT UNDERGROUND FACILITIES, CONTACT THE LOCAL COUNTIES, MUNICIPALITIES AND IDOT FOR LOCATES. THE CONTRACTOR SHALL CALL 'JULIE' AT (800) 892-0123 OR 811, IN THE CITY OF CHICAGO CONTACT DIGGER AT (312) 744-7000 FOR FIELD LOCATIONS OF BURIED UTILITIES (48 HOUR NOTIFICATION REQUIRED).

3. THE CONTRACTOR SHALL CHECK THE PROPOSED TRAFFIC SIGNAL EQUIPMENT LOCATIONS FOR OVERHEAD UTILITY CONFLICTS. THE CONTRACTOR SHALL COORDINATE ANY CONFLICTS WITH THE UTILITY COMPANIES AND THE RESIDENT ENGINEER BEFORE ORDERING MATERIALS.

4. THE CONTRACTOR SHALL COORDINATE CONSTRUCTION ACTIVITIES WITH UTILITY COMPANIES, LOCAL GOVERNMENT AGENCIES AND IDOT.

URS
100 S. WACKER DR.
SUITE 500
CHICAGO IL 60606
TEL (312)939-1000
FAX (312)939-9498

FILE NAME = D160M62-SHT-TD21.dgn	USER NAME = Anthony.Plutz	DESIGNED - MRF	REVISED -
		DRAWN - MRF	REVISED -
	PLOT SCALE = 40.000000 ' / in.	CHECKED - MJL	REVISED -
SHT_PLAN	PLOT DATE = 3/13/2013	DATE - 03/13/13	REVISED -

STATE OF ILLINOIS
DEPARTMENT OF TRANSPORTATION

TRAFFIC SIGNAL INSTALLATION PLAN
US 45 (LAGRANGE ROAD) AND CARL SANDBURG HS ENTRANCE/SOUTHMOOR DRIVE

SCALE: 1"=20' | SHEET 2 OF 2 SHEETS | STA. TO STA.

F.A.P RTE.	SECTION	COUNTY	TOTAL SHEETS	SHEET NO.
330	103R-5	COOK	778	292
	TD-21	CONTRACT NO. 60M62		
	ILLINOIS FED. AID PROJECT			

CONTROLLER SEQUENCE

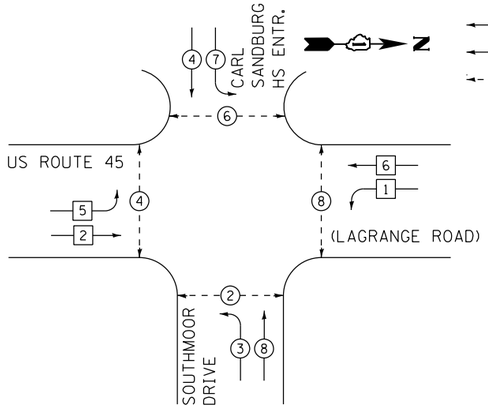

PHASE DESIGNATION DIAGRAM LEGEND

- DUAL ENTRY PHASE
- SINGLE ENTRY PHASE
- PEDESTRIAN PHASE
- * NUMBER REFERS TO ASSOCIATED PHASE

PHASE DESIGNATION DIAGRAM

EMERGENCY VEHICLE PREEMPTION SEQUENCE

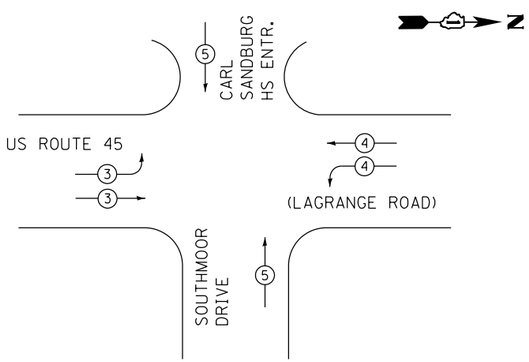

PROPOSED EMERGENCY VEHICLE PREEMPTORS			
EMERGENCY VEHICLE PREEMPTORS	3	4	5
MOVEMENT			

I.D.O.T. TRAFFIC SIGNAL INSTALLATION ELECTRICAL SERVICE REQUIREMENTS					TOTAL WATTAGE
TYPE	NO. OF LAMPS	WATTAGE x INCAND.	LED x	% OPERATION	
SIGNAL (RED)	20		17	0.50	170.0
(YELLOW)	20		25	0.25	125.0
(GREEN)	20		15	0.25	75.0
ARROW	8		12	0.10	9.6
PED. SIGNAL	8		25	1.00	200.0
CONTROLLER	1		100	1.00	100.0
ILLUM. SIGN	4		25	0.05	5.0
FLASHER			25	0.50	
ENERGY COST TO:				TOTAL=	684.6

66.7% CARL SANDBURG H.S.
13300 SOUTH LAGRANGE RD.

33.3% VILLAGE OF ORLAND PARK
14700 SOUTH RAVINIA AVE.

ENERGY SUPPLY: CONTACT: KATHRYN SUGRUE
PHONE: (708) 235-2337
COMPANY: COMMONWEALTH EDISON

CARL SANDBURG HIGH SCHOOL ENTRANCE

NOTE:
ALL TRAFFIC SIGNAL POLES, MAST ARM ASSEMBLIES, SIGNAL/PEDESTRIAN HEADS AND HOUSINGS, MOUNTING BRACKETS/PLATES/BOLTS, PEDESTRIAN PUSH BUTTONS, CONTROLLER CABINETS, AND ILLUMINATED SIGNS WITHIN THE VILLAGE OF ORLAND PARK SHALL BE PAINTED BLACK, IN ACCORDANCE WITH THE SPECIAL PROVISIONS.

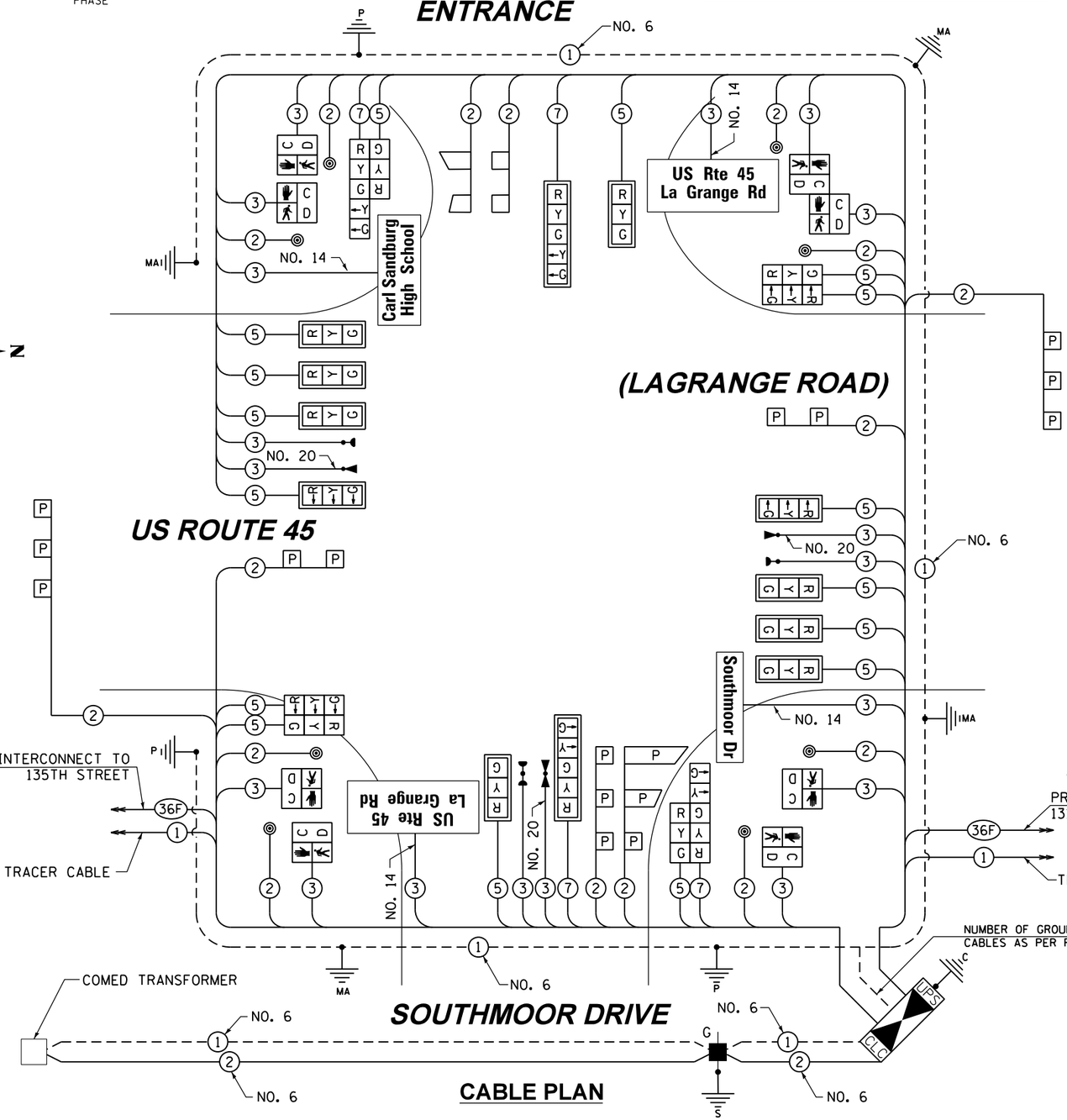

CABLE PLAN

SCHEDULE OF QUANTITIES

ITEM	UNIT	TOTAL
SIGN PANEL - TYPE 1	SQ FT	30
SERVICE INSTALLATION - GROUND MOUNTED	EACH	1
UNDERGROUND CONDUIT, GALVANIZED STEEL, 2" DIA.	FOOT	946
UNDERGROUND CONDUIT, GALVANIZED STEEL, 2 1/2" DIA.	FOOT	33
UNDERGROUND CONDUIT, GALVANIZED STEEL, 3" DIA.	FOOT	64
UNDERGROUND CONDUIT, GALVANIZED STEEL, 4" DIA.	FOOT	548
HANDHOLE	EACH	4
HEAVY-DUTY HANDHOLE	EACH	3
DOUBLE HANDHOLE	EACH	2
FULL-ACTUATED CONTROLLER AND TYPE IV CABINET, SPECIAL	EACH	1
UNINTERRUPTIBLE POWER SUPPLY, SPECIAL	EACH	1
TRANSCEIVER - FIBER OPTIC	EACH	1
ELECTRIC CABLE IN CONDUIT, SIGNAL NO. 14 2C	FOOT	1493
ELECTRIC CABLE IN CONDUIT, SIGNAL NO. 14 3C	FOOT	2272
ELECTRIC CABLE IN CONDUIT, SIGNAL NO. 14 5C	FOOT	3497
ELECTRIC CABLE IN CONDUIT, SIGNAL NO. 14 7C	FOOT	878
ELECTRIC CABLE IN CONDUIT, LEAD-IN, NO. 14 1 PAIR	FOOT	1822
ELECTRIC CABLE IN CONDUIT, SERVICE, NO. 6 2 C	FOOT	289
ELECTRIC CABLE IN CONDUIT, EQUIPMENT GROUNDING CONDUCTOR, NO. 6 1 C	FOOT	892
TRAFFIC SIGNAL POST, GALVANIZED STEEL 14 FT.	EACH	1
TRAFFIC SIGNAL POST, GALVANIZED STEEL 16 FT.	EACH	2
STEEL COMBINATION MAST ARM ASSEMBLY AND POLE, 46 FT.	EACH	1
STEEL COMBINATION MAST ARM ASSEMBLY AND POLE, 48 FT.	EACH	2
STEEL COMBINATION MAST ARM ASSEMBLY AND POLE, 54 FT.	EACH	1
CONCRETE FOUNDATION, TYPE A	FOOT	12
CONCRETE FOUNDATION, TYPE C	FOOT	4
CONCRETE FOUNDATION, TYPE E 36-INCH DIAMETER	FOOT	54
SIGNAL HEAD, LED, 1-FACE, 3-SECTION, MAST-ARM MOUNTED	EACH	10
SIGNAL HEAD, LED, 1-FACE, 5-SECTION, MAST-ARM MOUNTED	EACH	2
SIGNAL HEAD, LED, 2-FACE, 3-SECTION, BRACKET MOUNTED	EACH	2
SIGNAL HEAD, LED, 2-FACE, 1-3 SECTION, 1-5 SECTION, BRACKET MOUNTED	EACH	2
PEDESTRIAN SIGNAL HEAD, LED, 1-FACE, BRACKET MOUNTED WITH COUNTDOWN TIMER	EACH	6
PEDESTRIAN SIGNAL HEAD, LED, 2-FACE, BRACKET MOUNTED WITH COUNTDOWN TIMER	EACH	1
TRAFFIC SIGNAL BACKPLATE, LOUVERED, ALUMINUM	EACH	12
INDUCTIVE LOOP DETECTOR	EACH	8
DETECTOR LOOP, TYPE I	FOOT	148
PREFORMED DETECTOR LOOP	FOOT	541
* LIGHT DETECTOR	EACH	3
* LIGHT DETECTOR AMPLIFIER	EACH	1
PEDESTRIAN PUSH-BUTTON	EACH	8
TEMPORARY TRAFFIC SIGNAL INSTALLATION	EACH	1
REMOVE EXISTING TRAFFIC SIGNAL EQUIPMENT	EACH	1
REMOVE EXISTING HANDHOLE	EACH	10
REMOVE EXISTING CONCRETE FOUNDATION	EACH	10
* ELECTRIC CABLE IN CONDUIT NO. 20 3/C, TWISTED, SHIELDED	FOOT	723
** LED INTERNALLY ILLUMINATED STREET NAME SIGN	EACH	4
ELECTRIC SERVICE DISCONNECT, LIGHTING AND TRAFFIC SERVICE	EACH	1
TEMPORARY TRAFFIC SIGNAL TIMING	EACH	1

* 100% COST TO PALOS FIRE PROTECTION DISTRICT
** 100% COST TO VILLAGE OF ORLAND PARK

PROP. INTERCONNECT TO 131ST STREET
TRACER CABLE

THE END OF THE TRACER CABLE SHALL BE CONTINUOUS AND EXTEND INTO THE CONTROLLER CABINET.

NOTE:
THE TRAFFIC SIGNAL CONTROLLER EQUIPMENT FOR THIS PROJECT SHALL BE "EAGLE" TO MATCH THE EXISTING ADJACENT SYSTEM.

RESTORATION OF WORK AREA. RESTORATION OF THE TRAFFIC SIGNAL WORK AREA SHALL BE INCIDENTAL TO THE RELATED PAY ITEM SUCH AS FOUNDATION, CONDUIT, HANDHOLE, TRENCH AND BACKFILL, ETC., AND NO EXTRA COMPENSATION SHALL BE ALLOWED. ALL ROADWAY SURFACES SUCH AS SHOULDERS, MEDIANS, SIDEWALKS, PAVEMENT, ETC. SHALL BE REPLACED IN KIND. ALL DAMAGE TO MOWED LAWNS SHALL BE REPLACED WITH AN APPROVED SOD, AND ALL DAMAGE TO UNMOWED FIELDS SHALL BE SEEDED IN ACCORDANCE WITH STANDARD SPECIFICATIONS 252 AND 250 RESPECTIVELY.

NOTE:
NEW PERMANENT SERVICE INSTALLATIONS WITH ILLUMINATED SIGNS AND/OR COMBINATION MAST ARM SIGNAL POLES SHALL BE METERED.

URS
100 S. WACKER DR.
SUITE 500
CHICAGO IL 60606
TEL (312)-939-1000
FAX (312)-939-4198

FILE NAME = D160M62-SHT-TD22.dgn	USER NAME = Anthony.Plutz	DESIGNED - MRF	REVISED -	STATE OF ILLINOIS DEPARTMENT OF TRANSPORTATION	SCHEDULE OF QUANTITIES, CABLE PLAN, PHASE DESIGNATION DIAGRAM AND EMERGENCY VEHICLE PREEMPTION SEQUENCE US 45 (LAGRANGE ROAD) AND CARL SANDBURG HS ENTRANCE/SOUTHMOOR DRIVE
		DRAWN - MRF	REVISED -		
	PLOT SCALE = 40.0000 ' / in.	CHECKED - MJL	REVISED -		
SHT_PLAN	PLOT DATE = 3/13/2013	DATE - 03/13/13	REVISED -		SCALE: N.T.S. SHEET 1 OF 1 SHEETS STA. TO STA.

F.A.P RTE.	SECTION	COUNTY	TOTAL SHEETS	SHEET NO.
330	103R-5	COOK	778	293
TD-22		CONTRACT NO. 60M62		
		ILLINOIS FED. AID PROJECT		

RESTORATION OF WORK AREA. RESTORATION OF THE TRAFFIC SIGNAL WORK AREA SHALL BE INCIDENTAL TO THE RELATED PAY ITEM SUCH AS FOUNDATION, CONDUIT, HANDHOLE, TRENCH AND BACKFILL, ETC., AND NO EXTRA COMPENSATION SHALL BE ALLOWED. ALL ROADWAY SURFACES SUCH AS SHOULDERS, MEDIANS, SIDEWALKS, PAVEMENT, ETC. SHALL BE REPLACED IN KIND. ALL DAMAGE TO MOWED LAWNS SHALL BE REPLACED WITH AN APPROVED SOD, AND ALL DAMAGE TO UNMOWED FIELDS SHALL BE SEEDED IN ACCORDANCE WITH STANDARD SPECIFICATIONS 252 AND 250 RESPECTIVELY.

NOTE:
THE TRAFFIC SIGNAL CONTROLLER EQUIPMENT FOR THIS PROJECT SHALL BE "EAGLE" TO MATCH THE EXISTING ADJACENT SYSTEM.

CONSTRUCTION NOTES;

1. ANY TEMPORARY TRAFFIC SIGNAL SECTIONS NOT IN USE DURING A STAGE OF CONSTRUCTION SHALL BE BAGGED AND DEACTIVATED. SEE CABLE PLANS FOR MORE DETAILS.
2. ALL VIDEO DETECTION ZONES ARE TO BE REDEFINED DURING EACH STAGE OF CONSTRUCTION AND ARE INCLUDED IN THE COST OF THE TEMPORARY TRAFFIC SIGNAL INSTALLATION.
3. ~~TEMPORARY RADIO INTERCONNECT SHALL NOT BE REMOVED~~ UNTIL FIBER INTERCONNECT TO HS ENTRANCE/SOUTHMOOR DRIVE AND HS ENTRANCE/131ST STREET ARE INSTALLED AND OPERATIONAL.

TEMPORARY VIDEO DETECTION MOUNTING DETAIL
(NOT TO SCALE)

NOTES FOR TEMPORARY TRAFFIC SIGNAL;

1. ALL CONTROL EQUIPMENT SUCH AS COMMUNICATION DEVICES FOR THE TEMPORARY TRAFFIC SIGNAL(S) SHALL BE FURNISHED BY THE CONTRACTOR.
2. ONLY CONTROLLERS SUPPLIED BY ONE OF THE DISTRICT APPROVED CLOSED LOOP EQUIPMENT MANUFACTURERS WILL BE APPROVED FOR USE AT TEMPORARY SIGNAL LOCATIONS. ALL CONTROLLERS USED FOR TEMPORARY TRAFFIC SIGNALS SHALL BE FULLY ACTUATED NEMA MICROPROCESSOR BASED WITH RS232 DATA ENTRY PORTS COMPATIBLE WITH EXISTING MONITORING SOFTWARE APPROVED BY IDOT DISTRICT 1, INSTALLED IN A NEMA TS2 CABINET. ONLY ONE BRAND OF CONTROLLER WILL BE ACCEPTED FOR ANY ONE CONTRACT.
3. ALL TRAFFIC SIGNAL SECTIONS AND PEDESTRIAN SIGNAL SECTIONS SHALL BE LED AND 12" (300mm) DIAMETER. HEADS SHALL BE PLACED AS INDICATED ON THE TEMPORARY TRAFFIC SIGNAL PLAN OR AS DIRECTED BY THE ENGINEER. PEDESTRIAN SIGNALS SHALL INCLUDE SOLID INTERNATIONAL SYMBOLS. PEDESTRIAN SIGNALS WITH COUNTDOWN TIMERS SHALL BE USED WHEN THE EXISTING INSTALLATION UTILIZES COUNTDOWN TYPE OR AS DIRECTED BY THE ENGINEER. COUNTDOWN TYPE PEDESTRIAN SIGNALS ARE NOT TO BE INSTALLED AT A RAILROAD INTERSECTION. THE CONTRACTOR SHALL FURNISH ENOUGH CABLE SLACK TO RELOCATE HEADS TO ANY POSITION ON THE SPAN WIRE OR AT LOCATIONS ILLUSTRATED ON THE PLANS FOR CONSTRUCTION STAGING. THE TEMPORARY TRAFFIC SIGNAL SHALL REMAIN IN OPERATION DURING ALL SIGNAL HEAD RELOCATIONS. EACH TEMPORARY TRAFFIC SIGNAL HEAD SHALL HAVE ITS OWN CABLE FROM THE CONTROLLER CABINET TO THE SIGNAL HEAD.
4. ALL EXISTING STREET NAME AND INTERSECTION REGULATORY SIGNS SHALL BE REMOVED FROM EXISTING POLES, RELOCATED AND SECURELY FASTENED TO THE SPAN WIRE OR WOOD POLE AS DIRECTED BY THE ENGINEER.
5. ANY TEMPORARY SIGNAL WITHIN AN EXISTING CLOSED LOOP TRAFFIC SIGNAL SYSTEM SHALL BE INTERCONNECTED TO THAT SYSTEM USING SIMILAR BRAND CONTROL EQUIPMENT.

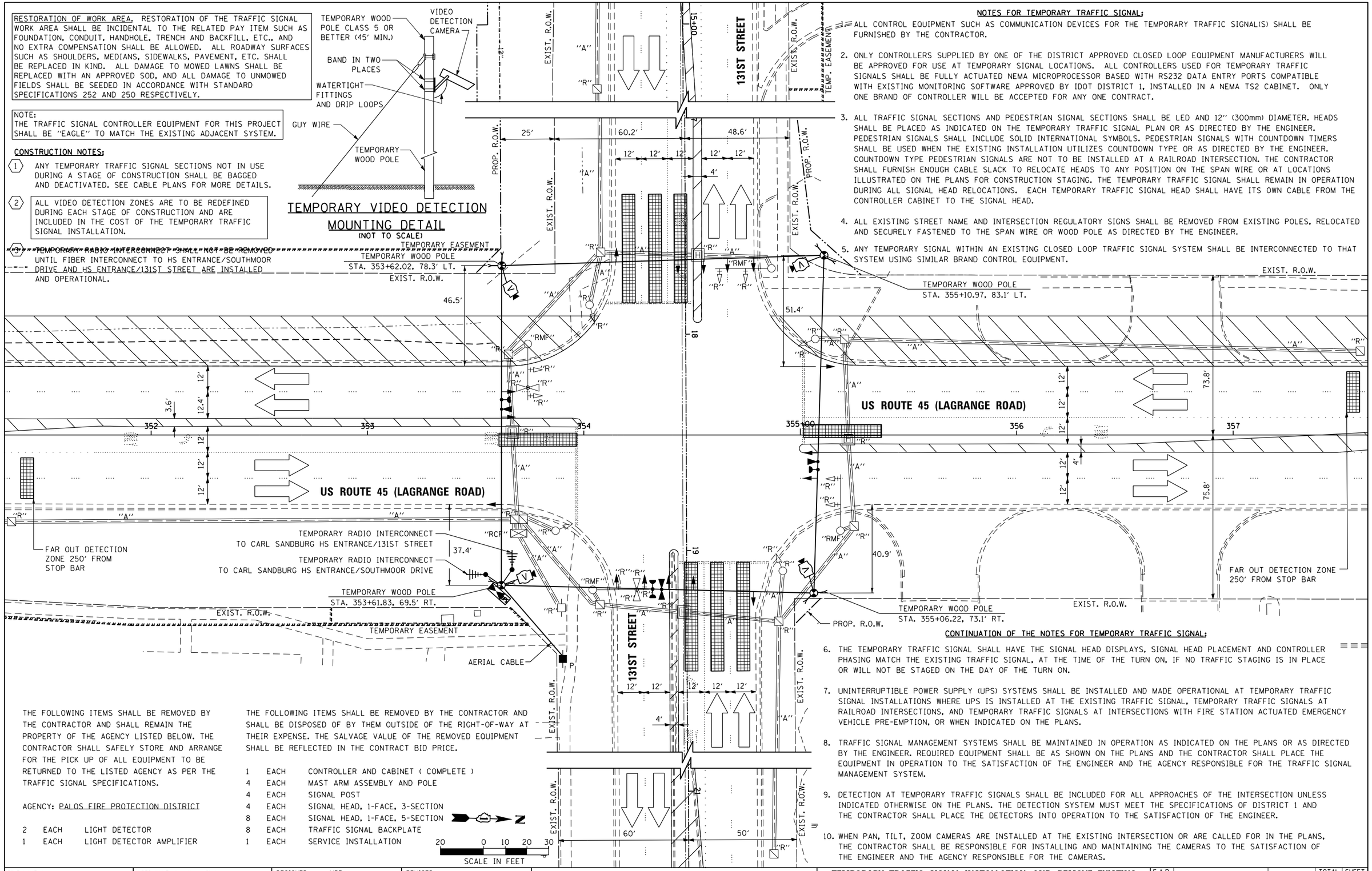

THE FOLLOWING ITEMS SHALL BE REMOVED BY THE CONTRACTOR AND SHALL REMAIN THE PROPERTY OF THE AGENCY LISTED BELOW. THE CONTRACTOR SHALL SAFELY STORE AND ARRANGE FOR THE PICK UP OF ALL EQUIPMENT TO BE RETURNED TO THE LISTED AGENCY AS PER THE TRAFFIC SIGNAL SPECIFICATIONS.

AGENCY: PALOS FIRE PROTECTION DISTRICT

2	EACH	LIGHT DETECTOR
1	EACH	LIGHT DETECTOR AMPLIFIER

THE FOLLOWING ITEMS SHALL BE REMOVED BY THE CONTRACTOR AND SHALL BE DISPOSED OF BY THEM OUTSIDE OF THE RIGHT-OF-WAY AT THEIR EXPENSE. THE SALVAGE VALUE OF THE REMOVED EQUIPMENT SHALL BE REFLECTED IN THE CONTRACT BID PRICE.

1	EACH	CONTROLLER AND CABINET (COMPLETE)
4	EACH	MAST ARM ASSEMBLY AND POLE
4	EACH	SIGNAL POST
4	EACH	SIGNAL HEAD, 1-FACE, 3-SECTION
8	EACH	SIGNAL HEAD, 1-FACE, 5-SECTION
8	EACH	TRAFFIC SIGNAL BACKPLATE
1	EACH	SERVICE INSTALLATION

20 0 10 20 30
SCALE IN FEET

CONTINUATION OF THE NOTES FOR TEMPORARY TRAFFIC SIGNAL;

6. THE TEMPORARY TRAFFIC SIGNAL SHALL HAVE THE SIGNAL HEAD DISPLAYS, SIGNAL HEAD PLACEMENT AND CONTROLLER PHASING MATCH THE EXISTING TRAFFIC SIGNAL, AT THE TIME OF THE TURN ON, IF NO TRAFFIC STAGING IS IN PLACE OR WILL NOT BE STAGED ON THE DAY OF THE TURN ON.
7. UNINTERRUPTIBLE POWER SUPPLY (UPS) SYSTEMS SHALL BE INSTALLED AND MADE OPERATIONAL AT TEMPORARY TRAFFIC SIGNAL INSTALLATIONS WHERE UPS IS INSTALLED AT THE EXISTING TRAFFIC SIGNAL, TEMPORARY TRAFFIC SIGNALS AT RAILROAD INTERSECTIONS, AND TEMPORARY TRAFFIC SIGNALS AT INTERSECTIONS WITH FIRE STATION ACTUATED EMERGENCY VEHICLE PRE-EMPTION, OR WHEN INDICATED ON THE PLANS.
8. TRAFFIC SIGNAL MANAGEMENT SYSTEMS SHALL BE MAINTAINED IN OPERATION AS INDICATED ON THE PLANS OR AS DIRECTED BY THE ENGINEER. REQUIRED EQUIPMENT SHALL BE AS SHOWN ON THE PLANS AND THE CONTRACTOR SHALL PLACE THE EQUIPMENT IN OPERATION TO THE SATISFACTION OF THE ENGINEER AND THE AGENCY RESPONSIBLE FOR THE TRAFFIC SIGNAL MANAGEMENT SYSTEM.
9. DETECTION AT TEMPORARY TRAFFIC SIGNALS SHALL BE INCLUDED FOR ALL APPROACHES OF THE INTERSECTION UNLESS INDICATED OTHERWISE ON THE PLANS. THE DETECTION SYSTEM MUST MEET THE SPECIFICATIONS OF DISTRICT 1 AND THE CONTRACTOR SHALL PLACE THE DETECTORS INTO OPERATION TO THE SATISFACTION OF THE ENGINEER.
10. WHEN PAN, TILT, ZOOM CAMERAS ARE INSTALLED AT THE EXISTING INTERSECTION OR ARE CALLED FOR IN THE PLANS, THE CONTRACTOR SHALL BE RESPONSIBLE FOR INSTALLING AND MAINTAINING THE CAMERAS TO THE SATISFACTION OF THE ENGINEER AND THE AGENCY RESPONSIBLE FOR THE CAMERAS.

URS
100 S. WACKER DR.
SUITE 500
CHICAGO IL 60606
TEL (312)939-1000
FAX (312)939-4198

FILE NAME = D160M62-SHT-TD23.dgn	USER NAME = Anthony.Plutz	DESIGNED - MRF	REVISED -
		DRAWN - MRF	REVISED -
	PLOT SCALE = 40.0000 ' / in.	CHECKED - MJL	REVISED -
SHT_PLAN	PLOT DATE = 3/13/2013	DATE - 03/13/13	REVISED -

STATE OF ILLINOIS
DEPARTMENT OF TRANSPORTATION

TEMPORARY TRAFFIC SIGNAL INSTALLATION AND REMOVE EXISTING TRAFFIC SIGNAL EQUIPMENT PLAN – PRE-STAGE
US 45 (LAGRANGE ROAD) AND 131ST STREET

SCALE: 1"=20' | SHEET 1 OF 6 SHEETS | STA. TO STA.

F.A.P RTE.	SECTION	COUNTY	TOTAL SHEETS	SHEET NO.
330	103R-5	COOK	778	294
	TD-23	CONTRACT NO. 60M62		
		ILLINOIS FED. AID PROJECT		

RESTORATION OF WORK AREA. RESTORATION OF THE TRAFFIC SIGNAL WORK AREA SHALL BE INCIDENTAL TO THE RELATED PAY ITEM SUCH AS FOUNDATION, CONDUIT, HANDHOLE, TRENCH AND BACKFILL, ETC., AND NO EXTRA COMPENSATION SHALL BE ALLOWED. ALL ROADWAY SURFACES SUCH AS SHOULDERS, MEDIANS, SIDEWALKS, PAVEMENT, ETC. SHALL BE REPLACED IN KIND. ALL DAMAGE TO MOWED LAWNS SHALL BE REPLACED WITH AN APPROVED SOD, AND ALL DAMAGE TO UNMOWED FIELDS SHALL BE SEEDED IN ACCORDANCE WITH STANDARD SPECIFICATIONS 252 AND 250 RESPECTIVELY.

NOTE:
THE TRAFFIC SIGNAL CONTROLLER EQUIPMENT FOR THIS PROJECT SHALL BE "EAGLE" TO MATCH THE EXISTING ADJACENT SYSTEM.

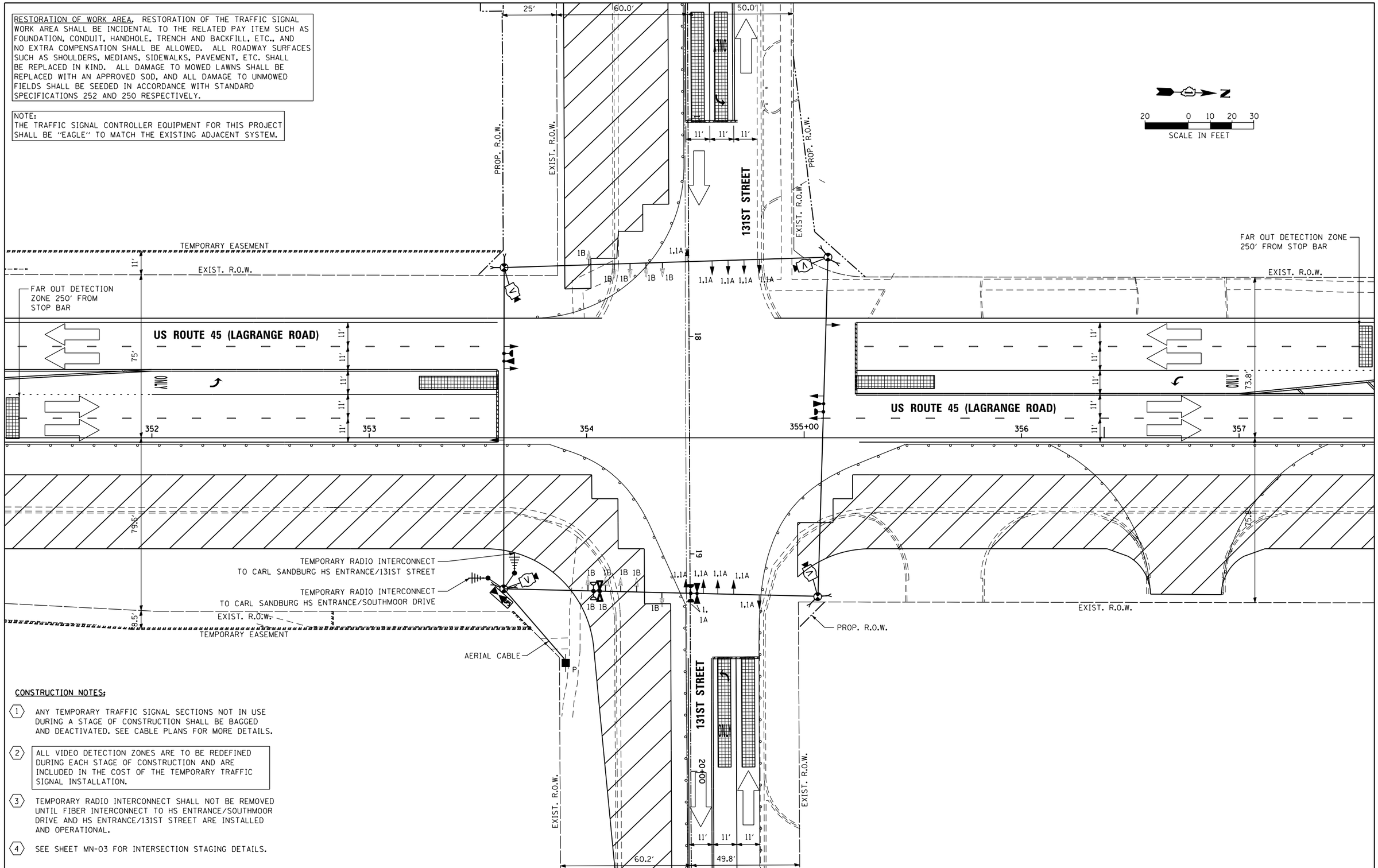

CONSTRUCTION NOTES:

1. ANY TEMPORARY TRAFFIC SIGNAL SECTIONS NOT IN USE DURING A STAGE OF CONSTRUCTION SHALL BE BAGGED AND DEACTIVATED. SEE CABLE PLANS FOR MORE DETAILS.
2. ALL VIDEO DETECTION ZONES ARE TO BE REDEFINED DURING EACH STAGE OF CONSTRUCTION AND ARE INCLUDED IN THE COST OF THE TEMPORARY TRAFFIC SIGNAL INSTALLATION.
3. TEMPORARY RADIO INTERCONNECT SHALL NOT BE REMOVED UNTIL FIBER INTERCONNECT TO HS ENTRANCE/SOUTHMOOR DRIVE AND HS ENTRANCE/131ST STREET ARE INSTALLED AND OPERATIONAL.
4. SEE SHEET MN-03 FOR INTERSECTION STAGING DETAILS.

URS
100 S. WACKER DR.
SUITE 500
CHICAGO IL 60606
TEL (312)939-1000
FAX (312)939-9498

FILE NAME = D160M62-SHT-TD24.dgn	USER NAME = Anthony.Plutz	DESIGNED - MRF	REVISED -
		DRAWN - MRF	REVISED -
	PLOT SCALE = 40.0000 ' / in.	CHECKED - MJL	REVISED -
SHT_PLAN	PLOT DATE = 3/13/2013	DATE - 03/13/13	REVISED -

STATE OF ILLINOIS
DEPARTMENT OF TRANSPORTATION

TEMPORARY TRAFFIC SIGNAL INSTALLATION – STAGE 1
US 45 (LAGRANGE ROAD) AND 131ST STREET

SCALE: 1"=20' | SHEET 2 OF 6 SHEETS | STA. TO STA.

F.A.P RTE.	SECTION	COUNTY	TOTAL SHEETS	SHEET NO.
330	103R-5	COOK	778	295
	TD-24	CONTRACT NO. 60M62		
		ILLINOIS FED. AID PROJECT		

RESTORATION OF WORK AREA. RESTORATION OF THE TRAFFIC SIGNAL WORK AREA SHALL BE INCIDENTAL TO THE RELATED PAY ITEM SUCH AS FOUNDATION, CONDUIT, HANDHOLE, TRENCH AND BACKFILL, ETC., AND NO EXTRA COMPENSATION SHALL BE ALLOWED. ALL ROADWAY SURFACES SUCH AS SHOULDERS, MEDIANS, SIDEWALKS, PAVEMENT, ETC. SHALL BE REPLACED IN KIND. ALL DAMAGE TO MOWED LAWNS SHALL BE REPLACED WITH AN APPROVED SOD, AND ALL DAMAGE TO UNMOWED FIELDS SHALL BE SEEDED IN ACCORDANCE WITH STANDARD SPECIFICATIONS 252 AND 250 RESPECTIVELY.

NOTE:
THE TRAFFIC SIGNAL CONTROLLER EQUIPMENT FOR THIS PROJECT SHALL BE "EAGLE" TO MATCH THE EXISTING ADJACENT SYSTEM.

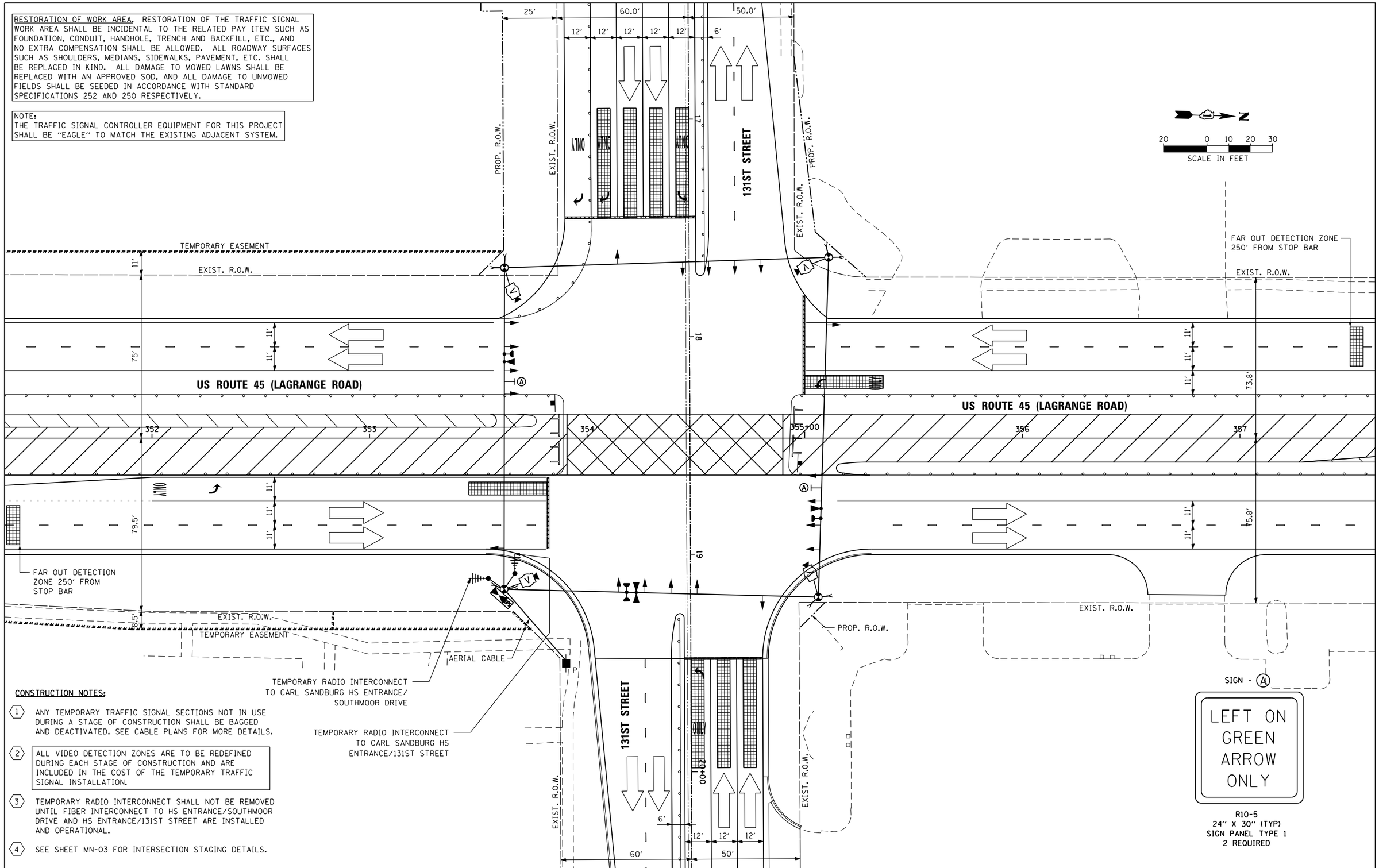

CONSTRUCTION NOTES:

1. ANY TEMPORARY TRAFFIC SIGNAL SECTIONS NOT IN USE DURING A STAGE OF CONSTRUCTION SHALL BE BAGGED AND DEACTIVATED. SEE CABLE PLANS FOR MORE DETAILS.
2. ALL VIDEO DETECTION ZONES ARE TO BE REDEFINED DURING EACH STAGE OF CONSTRUCTION AND ARE INCLUDED IN THE COST OF THE TEMPORARY TRAFFIC SIGNAL INSTALLATION.
3. TEMPORARY RADIO INTERCONNECT SHALL NOT BE REMOVED UNTIL FIBER INTERCONNECT TO HS ENTRANCE/SOUTHMOOR DRIVE AND HS ENTRANCE/131ST STREET ARE INSTALLED AND OPERATIONAL.
4. SEE SHEET MN-03 FOR INTERSECTION STAGING DETAILS.

URS
100 S. WACKER DR.
SUITE 500
CHICAGO IL 60606
TEL (312)939-1000
FAX (312)939-4498

FILE NAME = D160M62-SHT-TD25.dgn	USER NAME = Anthony.Plutz	DESIGNED - MRF	REVISED -	STATE OF ILLINOIS DEPARTMENT OF TRANSPORTATION	TEMPORARY TRAFFIC SIGNAL INSTALLATION – STAGE 2 US 45 (LAGRANGE ROAD) AND 131ST STREET
		DRAWN - MRF	REVISED -		
	PLOT SCALE = 40.0000 ' / in.	CHECKED - MJL	REVISED -		
SHT_PLAN	PLOT DATE = 3/13/2013	DATE - 03/13/2013	REVISED -		SCALE: 1"=20' SHEET 3 OF 6 SHEETS STA. TO STA.

F.A.P RTE.	SECTION	COUNTY	TOTAL SHEETS	SHEET NO.
330	103R-5	COOK	778	296
TD-25		CONTRACT NO. 60M62		
	ILLINOIS	FED. AID PROJECT		

RESTORATION OF WORK AREA. RESTORATION OF THE TRAFFIC SIGNAL WORK AREA SHALL BE INCIDENTAL TO THE RELATED PAY ITEM SUCH AS FOUNDATION, CONDUIT, HANDHOLE, TRENCH AND BACKFILL, ETC., AND NO EXTRA COMPENSATION SHALL BE ALLOWED. ALL ROADWAY SURFACES SUCH AS SHOULDERS, MEDIANS, SIDEWALKS, PAVEMENT, ETC. SHALL BE REPLACED IN KIND. ALL DAMAGE TO MOWED LAWNS SHALL BE REPLACED WITH AN APPROVED SOD, AND ALL DAMAGE TO UNMOWED FIELDS SHALL BE SEEDED IN ACCORDANCE WITH STANDARD SPECIFICATIONS 252 AND 250 RESPECTIVELY.

NOTE:
THE TRAFFIC SIGNAL CONTROLLER EQUIPMENT FOR THIS PROJECT SHALL BE "EAGLE" TO MATCH THE EXISTING ADJACENT SYSTEM.

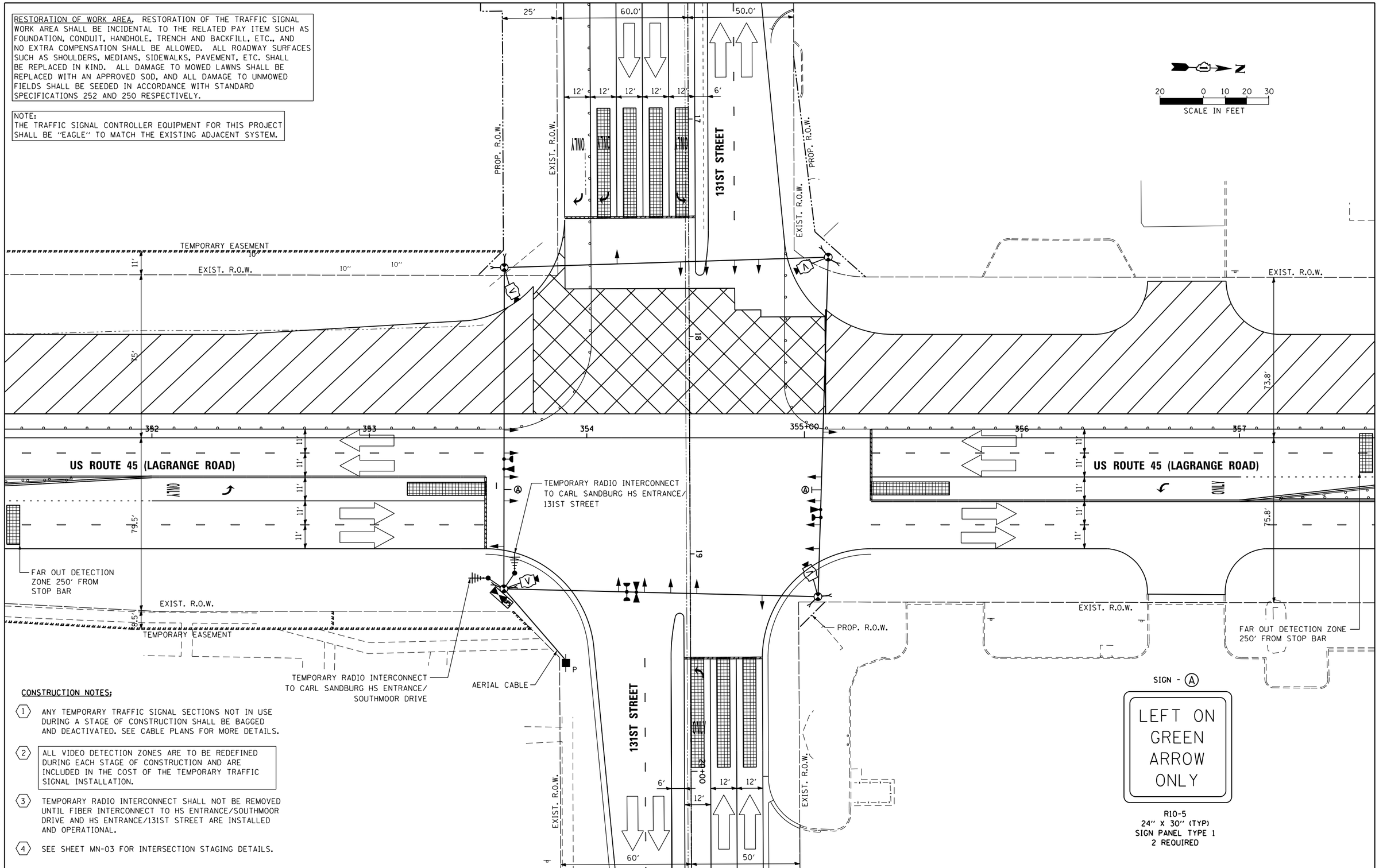

SIGN - (A)

LEFT ON GREEN ARROW ONLY

R10-5
24" X 30" (TYP)
SIGN PANEL TYPE 1
2 REQUIRED

CONSTRUCTION NOTES:

1. ANY TEMPORARY TRAFFIC SIGNAL SECTIONS NOT IN USE DURING A STAGE OF CONSTRUCTION SHALL BE BAGGED AND DEACTIVATED. SEE CABLE PLANS FOR MORE DETAILS.
2. ALL VIDEO DETECTION ZONES ARE TO BE REDEFINED DURING EACH STAGE OF CONSTRUCTION AND ARE INCLUDED IN THE COST OF THE TEMPORARY TRAFFIC SIGNAL INSTALLATION.
3. TEMPORARY RADIO INTERCONNECT SHALL NOT BE REMOVED UNTIL FIBER INTERCONNECT TO HS ENTRANCE/SOUTHMOOR DRIVE AND HS ENTRANCE/131ST STREET ARE INSTALLED AND OPERATIONAL.
4. SEE SHEET MN-03 FOR INTERSECTION STAGING DETAILS.

URS
100 S. WACKER DR.
SUITE 500
CHICAGO IL 60606
TEL (312)-939-1000
FAX (312)-939-4198

FILE NAME = D160M62-SHT-TD26.dgn	USER NAME = Anthony.Plutz	DESIGNED - MRF	REVISED -
		DRAWN - MRF	REVISED -
	PLOT SCALE = 40.0000 ' / in.	CHECKED - MJL	REVISED -
SHT_PLAN	PLOT DATE = 3/13/2013	DATE - 03/13/13	REVISED -

STATE OF ILLINOIS
DEPARTMENT OF TRANSPORTATION

TEMPORARY TRAFFIC SIGNAL INSTALLATION – STAGE 3
US 45 (LAGRANGE ROAD) AND 131ST STREET

SCALE: 1"=20' | SHEET 4 OF 6 SHEETS | STA. TO STA.

F.A.P RTE.	SECTION	COUNTY	TOTAL SHEETS	SHEET NO.
330	103R-5	COOK	778	297
	TD-26	CONTRACT NO. 60M62		
		ILLINOIS FED. AID PROJECT		

RESTORATION OF WORK AREA. RESTORATION OF THE TRAFFIC SIGNAL WORK AREA SHALL BE INCIDENTAL TO THE RELATED PAY ITEM SUCH AS FOUNDATION, CONDUIT, HANDHOLE, TRENCH AND BACKFILL, ETC., AND NO EXTRA COMPENSATION SHALL BE ALLOWED. ALL ROADWAY SURFACES SUCH AS SHOULDERS, MEDIANS, SIDEWALKS, PAVEMENT, ETC. SHALL BE REPLACED IN KIND. ALL DAMAGE TO MOWED LAWNS SHALL BE REPLACED WITH AN APPROVED SOD, AND ALL DAMAGE TO UNMOWED FIELDS SHALL BE SEEDED IN ACCORDANCE WITH STANDARD SPECIFICATIONS 252 AND 250 RESPECTIVELY.

NOTE:
THE TRAFFIC SIGNAL CONTROLLER EQUIPMENT FOR THIS PROJECT SHALL BE "EAGLE" TO MATCH THE EXISTING ADJACENT SYSTEM.

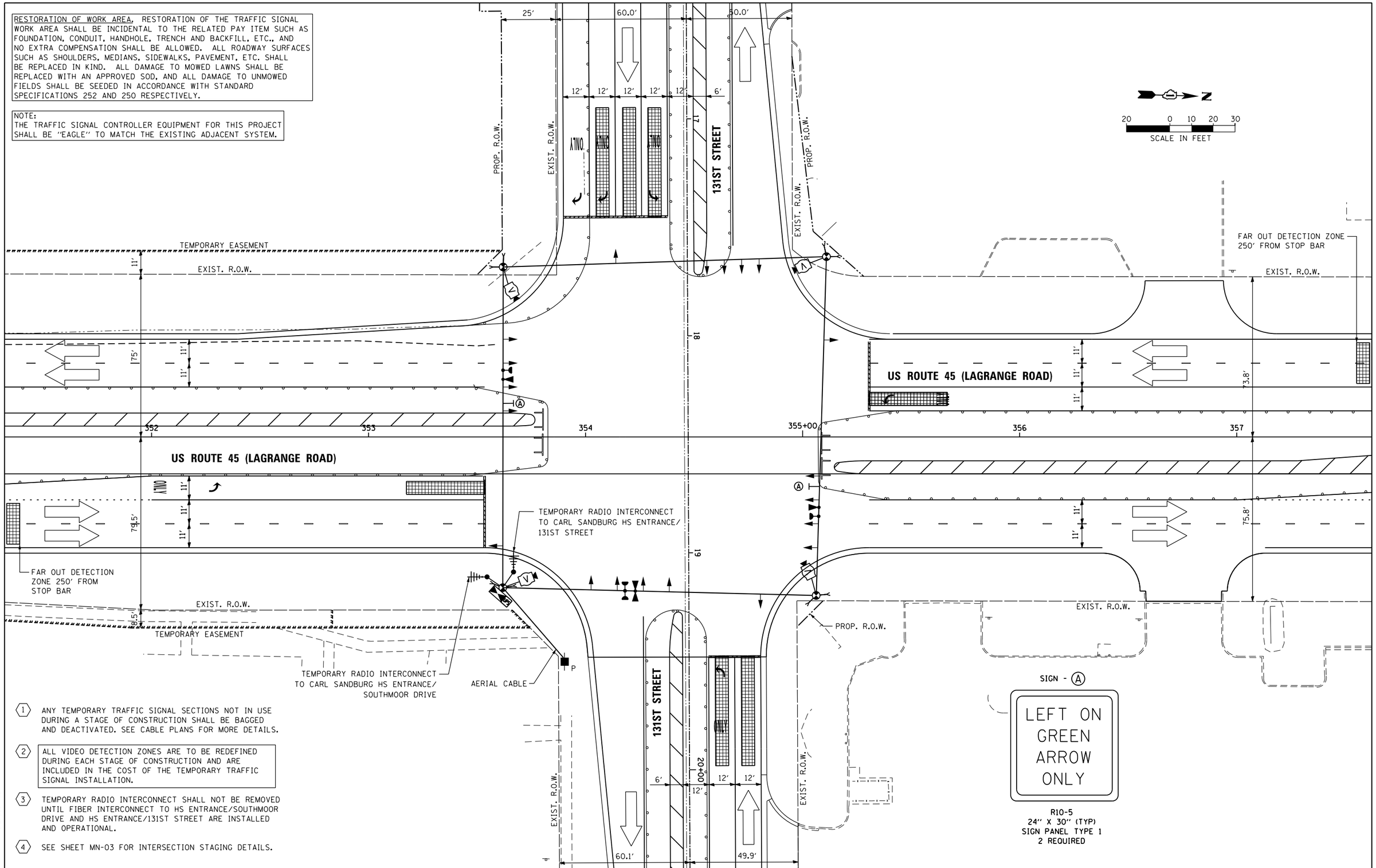

1. ANY TEMPORARY TRAFFIC SIGNAL SECTIONS NOT IN USE DURING A STAGE OF CONSTRUCTION SHALL BE BAGGED AND DEACTIVATED. SEE CABLE PLANS FOR MORE DETAILS.
2. ALL VIDEO DETECTION ZONES ARE TO BE REDEFINED DURING EACH STAGE OF CONSTRUCTION AND ARE INCLUDED IN THE COST OF THE TEMPORARY TRAFFIC SIGNAL INSTALLATION.
3. TEMPORARY RADIO INTERCONNECT SHALL NOT BE REMOVED UNTIL FIBER INTERCONNECT TO HS ENTRANCE/SOUTHMOOR DRIVE AND HS ENTRANCE/131ST STREET ARE INSTALLED AND OPERATIONAL.
4. SEE SHEET MN-03 FOR INTERSECTION STAGING DETAILS.

URS
100 S. WACKER DR.
SUITE 500
CHICAGO IL 60606
TEL (312)939-1000
FAX (312)939-4198

FILE NAME = D160M62-SHT-TD27.dgn	USER NAME = Anthony.Plutz	DESIGNED - MRF	REVISED -
		DRAWN - MRF	REVISED -
	PLOT SCALE = 40.0000 ' / in.	CHECKED - MJL	REVISED -
SHT_PLAN	PLOT DATE = 3/13/2013	DATE - 03/13/13	REVISED -

STATE OF ILLINOIS
DEPARTMENT OF TRANSPORTATION

TEMPORARY TRAFFIC SIGNAL INSTALLATION – STAGE 4
US 45 (LAGRANGE ROAD) AND 131ST STREET

SCALE: 1"=20' | SHEET 5 OF 6 SHEETS | STA. TO STA.

F.A.P RTE.	SECTION	COUNTY	TOTAL SHEETS	SHEET NO.
330	103R-5	COOK	778	298
	TD-27	CONTRACT NO. 60M62		
		ILLINOIS FED. AID PROJECT		

RESTORATION OF WORK AREA. RESTORATION OF THE TRAFFIC SIGNAL WORK AREA SHALL BE INCIDENTAL TO THE RELATED PAY ITEM SUCH AS FOUNDATION, CONDUIT, HANDHOLE, TRENCH AND BACKFILL, ETC., AND NO EXTRA COMPENSATION SHALL BE ALLOWED. ALL ROADWAY SURFACES SUCH AS SHOULDERS, MEDIANS, SIDEWALKS, PAVEMENT, ETC. SHALL BE REPLACED IN KIND. ALL DAMAGE TO MOWED LAWNS SHALL BE REPLACED WITH AN APPROVED SOD, AND ALL DAMAGE TO UNMOWED FIELDS SHALL BE SEEDED IN ACCORDANCE WITH STANDARD SPECIFICATIONS 252 AND 250 RESPECTIVELY.

NOTE:
THE TRAFFIC SIGNAL CONTROLLER EQUIPMENT FOR THIS PROJECT SHALL BE "EAGLE" TO MATCH THE EXISTING ADJACENT SYSTEM.

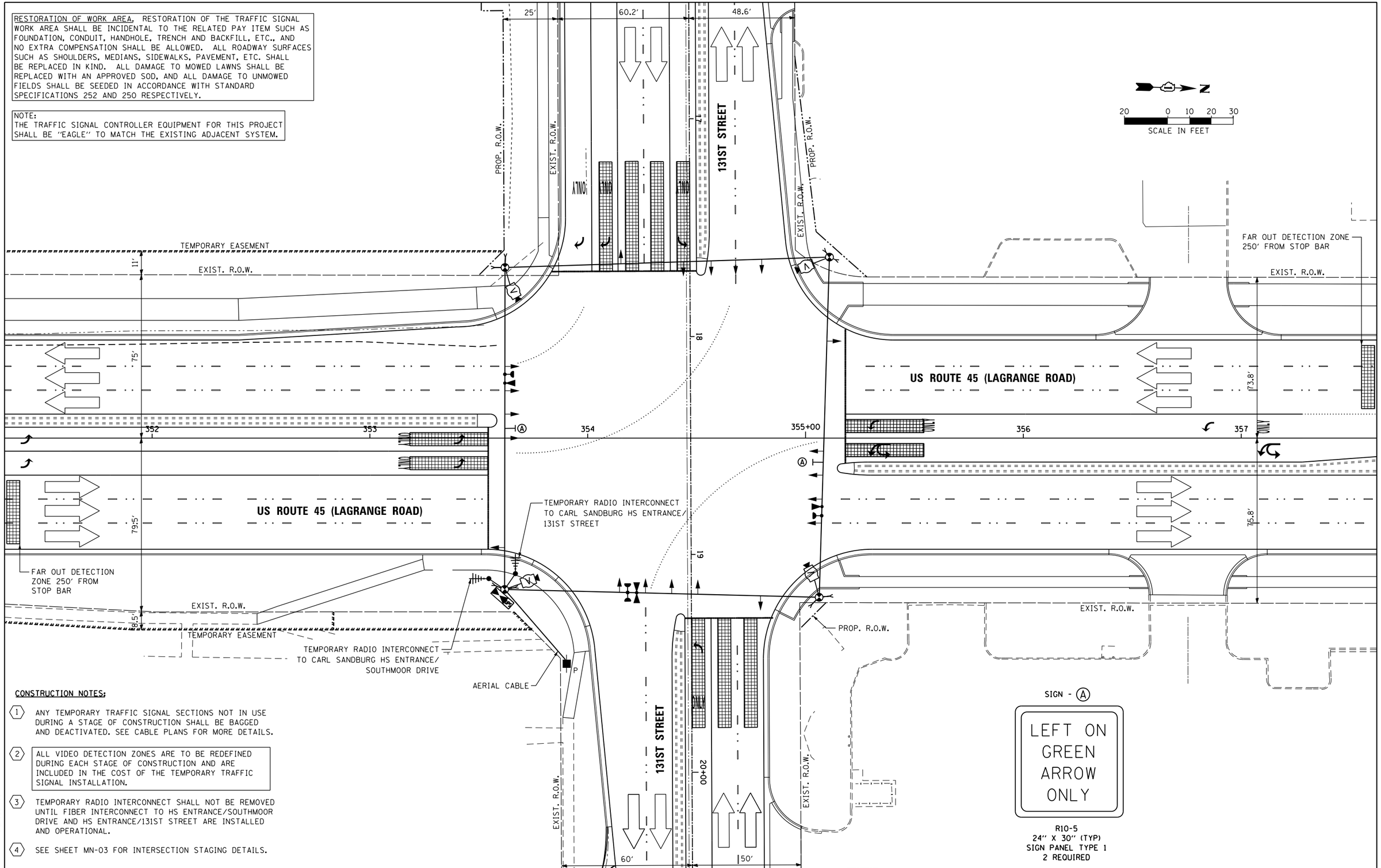

CONSTRUCTION NOTES:

1. ANY TEMPORARY TRAFFIC SIGNAL SECTIONS NOT IN USE DURING A STAGE OF CONSTRUCTION SHALL BE BAGGED AND DEACTIVATED. SEE CABLE PLANS FOR MORE DETAILS.

2. ALL VIDEO DETECTION ZONES ARE TO BE REDEFINED DURING EACH STAGE OF CONSTRUCTION AND ARE INCLUDED IN THE COST OF THE TEMPORARY TRAFFIC SIGNAL INSTALLATION.

3. TEMPORARY RADIO INTERCONNECT SHALL NOT BE REMOVED UNTIL FIBER INTERCONNECT TO HS ENTRANCE/SOUTHMOOR DRIVE AND HS ENTRANCE/131ST STREET ARE INSTALLED AND OPERATIONAL.

4. SEE SHEET MN-03 FOR INTERSECTION STAGING DETAILS.

URS
100 S. WACKER DR.
SUITE 500
CHICAGO IL 60606
TEL (312)-939-1000
FAX (312)-939-4168

FILE NAME = D160M62-SHT-TD28.dgn	USER NAME = Anthony.Plutz	DESIGNED - MRF	REVISED -
		DRAWN - MRF	REVISED -
	PLOT SCALE = 40.0000 ' / in.	CHECKED - MJL	REVISED -
SHT_PLAN	PLOT DATE = 3/13/2013	DATE - 03/13/13	REVISED -

STATE OF ILLINOIS
DEPARTMENT OF TRANSPORTATION

TEMPORARY TRAFFIC SIGNAL INSTALLATION – FINAL GEOMETRICS
US 45 (LAGRANGE ROAD) AND 131ST STREET

SCALE: 1"=20' | SHEET 6 OF 6 SHEETS | STA. TO STA.

F.A.P RTE.	SECTION	COUNTY	TOTAL SHEETS	SHEET NO.
330	103R-5	COOK	778	299
	TD-28	CONTRACT NO. 60M62		
		ILLINOIS FED. AID PROJECT		

TEMPORARY CONTROLLER SEQUENCE

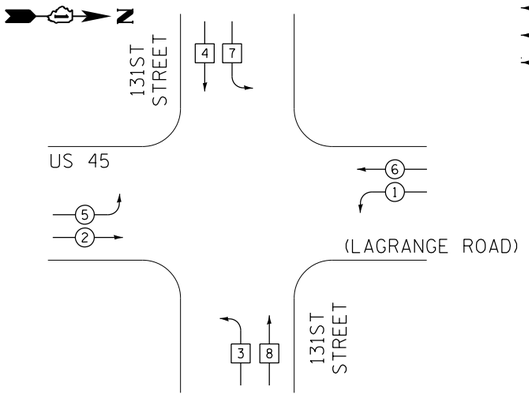

TEMPORARY PHASE DESIGNATION DIAGRAM

TEMPORARY EMERGENCY VEHICLE PREEMPTION SEQUENCE

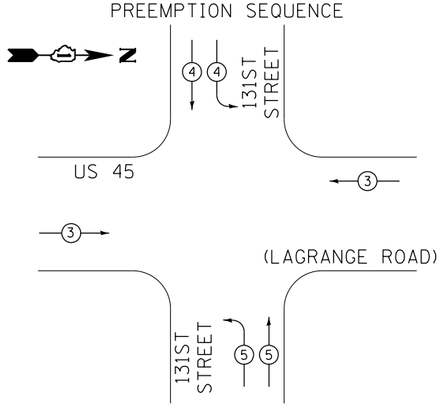

PHASE DESIGNATION DIAGRAM LEGEND

- DUAL ENTRY PHASE
- SINGLE ENTRY PHASE
- PEDESTRIAN PHASE
- NUMBER REFERS TO ASSOCIATED PHASE

TEMPORARY EMERGENCY VEHICLE PREEMPTORS			
EMERGENCY VEHICLE PREEMPTORS	3	4	5
MOVEMENT			

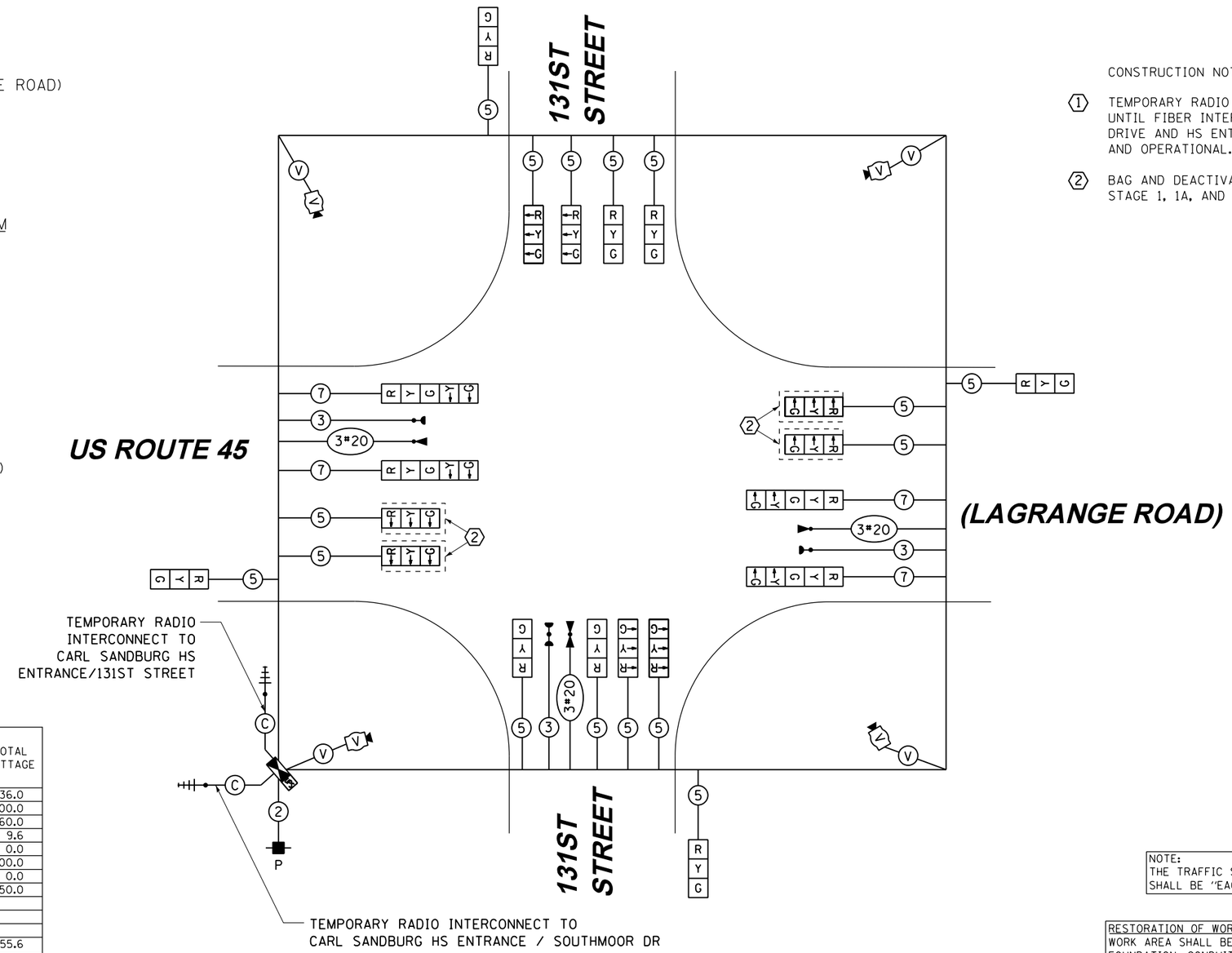

CONSTRUCTION NOTES:

1. TEMPORARY RADIO INTERCONNECT SHALL NOT BE REMOVED UNTIL FIBER INTERCONNECT TO HS ENTRANCE/SOUTHMOOR DRIVE AND HS ENTRANCE/131ST STREET ARE INSTALLED AND OPERATIONAL.
2. BAG AND DEACTIVATE SIGNAL SECTION DURING PRE-STAGE, STAGE 1, 1A, AND 1B.

I.D.O.T. TRAFFIC SIGNAL INSTALLATION ELECTRICAL SERVICE REQUIREMENTS					TOTAL WATTAGE
TYPE	NO. OF LAMPS	x WATTAGE INCAND.	LED	x % OPERATION	
SIGNAL (RED)	16		17	0.50	136.0
(YELLOW)	16		25	0.25	100.0
(GREEN)	16		15	0.25	60.0
ARROW	8		12	0.10	9.6
PED. SIGNAL	--		25	1.00	0.0
CONTROLLER	1		100	1.00	100.0
ILLUM. SIGN	--		25	0.05	0.0
VIDEO SYSTEM	1		150	1.00	150.0
FLASHER			25	0.50	
ENERGY COST TO:				TOTAL =	555.6

ILLINOIS DEPARTMENT OF TRANSPORTATION

DIVISION OF HIGHWAY/DISTRICT 1
201 WEST CENTER COURT/SCHAUMBURG, ILLINOIS 60196-1096

ENERGY SUPPLY: CONTACT: KATHRYN SUGRUE
PHONE: (708) 235-2337
COMPANY: COMMONWEALTH EDISON

NOTE:
THE TRAFFIC SIGNAL CONTROLLER EQUIPMENT FOR THIS PROJECT SHALL BE "EAGLE" TO MATCH THE EXISTING ADJACENT SYSTEM.

RESTORATION OF WORK AREA. RESTORATION OF THE TRAFFIC SIGNAL WORK AREA SHALL BE INCIDENTAL TO THE RELATED PAY ITEM SUCH AS FOUNDATION, CONDUIT, HANDHOLE, TRENCH AND BACKFILL, ETC., AND NO EXTRA COMPENSATION SHALL BE ALLOWED. ALL ROADWAY SURFACES SUCH AS SHOULDERS, MEDIANS, SIDEWALKS, PAVEMENT, ETC. SHALL BE REPLACED IN KIND. ALL DAMAGE TO MOWED LAWNS SHALL BE REPLACED WITH AN APPROVED SOD, AND ALL DAMAGE TO UNMOWED FIELDS SHALL BE SEEDED IN ACCORDANCE WITH STANDARD SPECIFICATIONS 252 AND 250 RESPECTIVELY.

TEMPORARY CABLE PLAN
PRE-STAGE, STAGE 1, 1A & 1B

URS
100 S. WACKER DR.
SUITE 500
CHICAGO IL 60606
TEL (312)939-1000
FAX (312)939-498

FILE NAME = D160M62-SHT-TD29.dgn	USER NAME = Anthony.Plutz	DESIGNED - MRF	REVISED -
		DRAWN - MRF	REVISED -
	PLOT SCALE = 40.0000 ' / in.	CHECKED - MJL	REVISED -
SHT_PLAN	PLOT DATE = 3/13/2013	DATE - 03/13/13	REVISED -

STATE OF ILLINOIS
DEPARTMENT OF TRANSPORTATION

TEMPORARY CABLE PLAN, TEMPORARY PHASE DESIGNATION DIAGRAM & EMERGENCY VEHICLE PREEMPTION SEQUENCE US 45 (LAGRANGE ROAD) AND 131ST STREET – PRE-STAGE, STAGE 1, 1A & 1B

SCALE: N.T.S. | SHEET 1 OF 2 SHEETS | STA. TO STA.

F.A.P RTE.	SECTION	COUNTY	TOTAL SHEETS	SHEET NO.
330	103R-5	COOK	778	300
	TD-29	CONTRACT NO. 60M62		
		ILLINOIS FED. AID PROJECT		