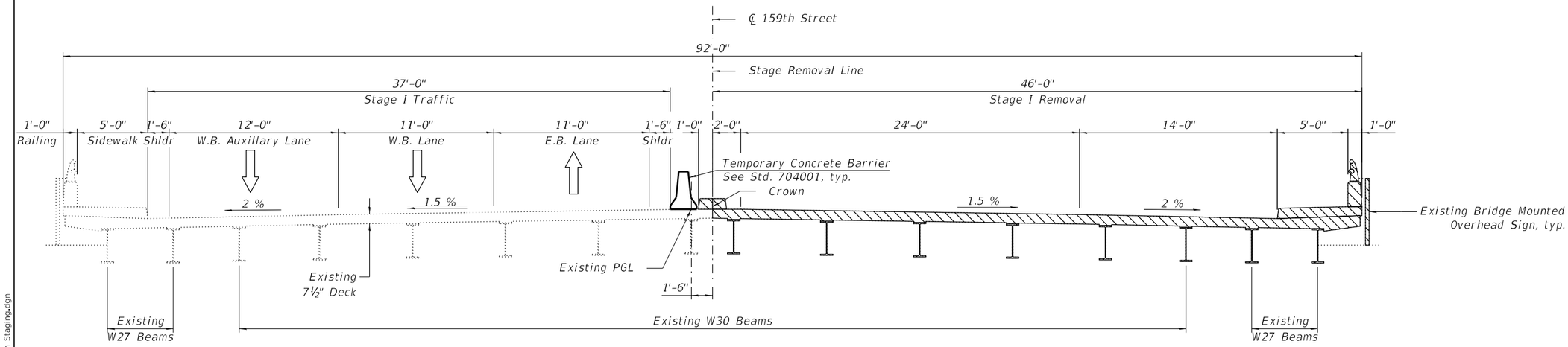

STAGE I REMOVAL

(Looking East)

LEGEND

Removal of Existing Superstructure

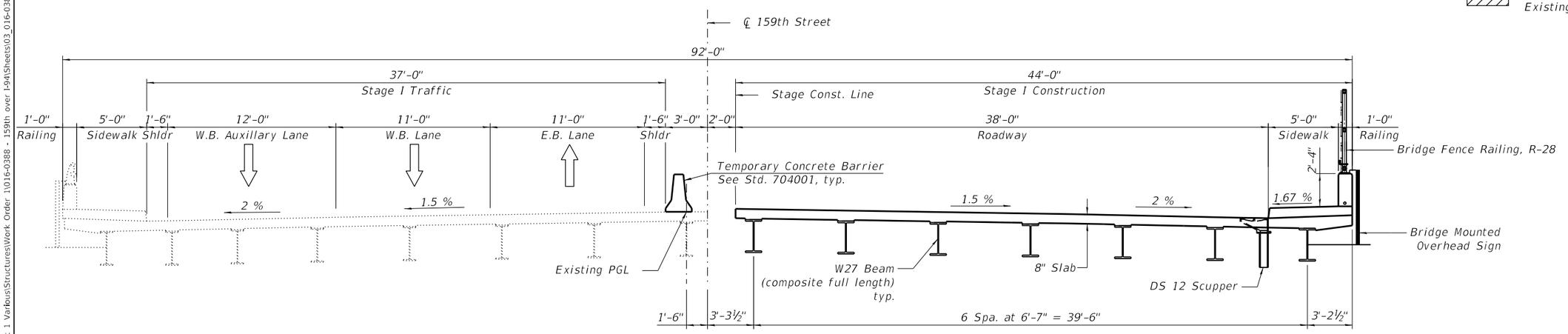

STAGE I CONSTRUCTION

(Looking East)

Notes:

For details of Temporary Concrete Barrier, see Sheet S10-05.

For quantity of Temporary Concrete Barrier, see Roadway Plans.

MODEL: Default
FILE NAME: pw:\\wsp-us-pw.bentley.com:wsp-us-pw-ILL\Documents\Project IDOT 2050082201 - IDOT District 1 Various\Structures\Work Order 1\016-0388 - 159th over I-94\Sheets\03_016-0388-Construction Staging.dgn

1/23/2025 11:44:18 AM

USER NAME =	DESIGNED - BJD	REVISED -	
	CHECKED - MGH	REVISED -	
PLOT SCALE =	DRAWN - GM	REVISED -	
PLOT DATE =	CHECKED - BJD	REVISED -	

STATE OF ILLINOIS
DEPARTMENT OF TRANSPORTATION

STAGE CONSTRUCTION DETAILS - 1
STRUCTURE NO. 016-0388

SHEET S10-03 OF S10-37 SHEETS

FAP RTE.	SECTION	COUNTY	TOTAL SHEETS	SHEET NO.
581	(42-B-11-1) BR, BJR 24	COOK	761	701
		CONTRACT NO. 62W87		
	ILLINOIS	FED. AID PROJECT		

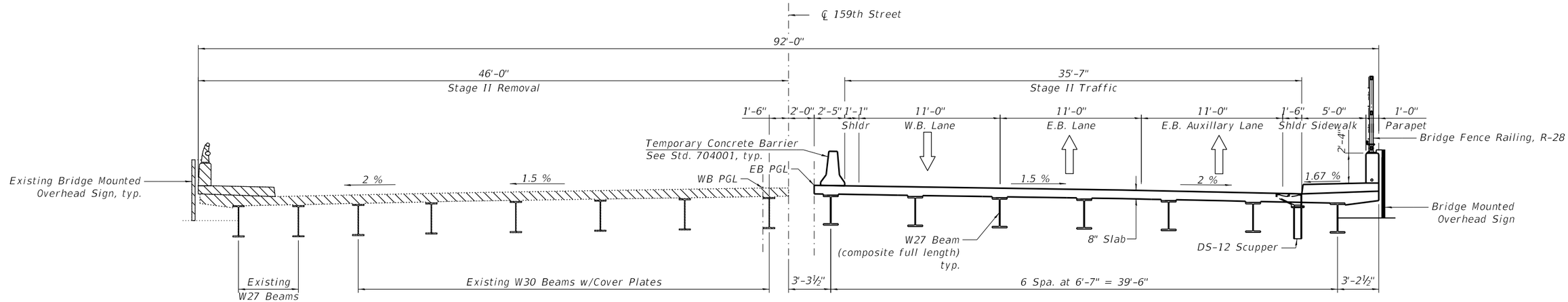

STAGE II REMOVAL

(Looking East)

LEGEND

Removal of Existing Superstructure

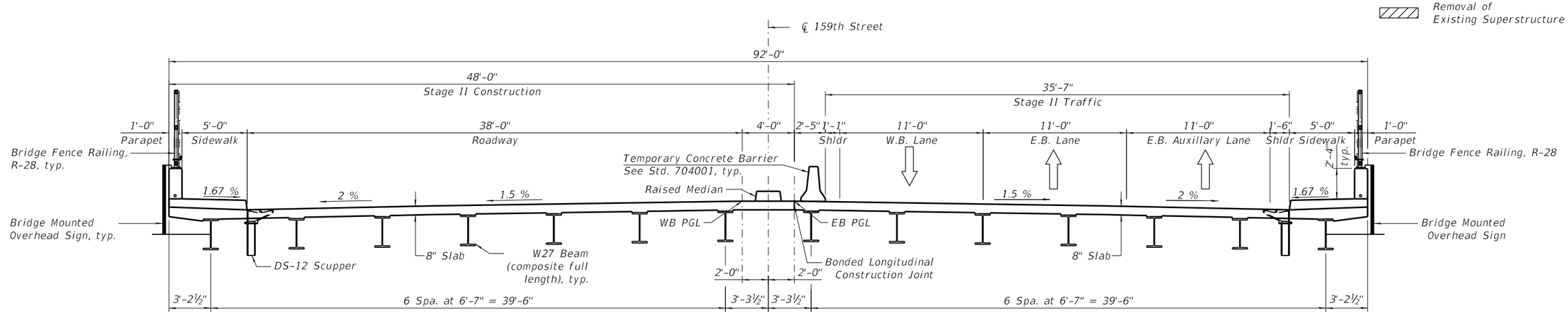

STAGE II CONSTRUCTION

(Looking East)

Notes:

For details of Temporary Concrete Barrier, see Sheet S10-05.

For quantity of Temporary Concrete Barrier, see Roadway Plans.

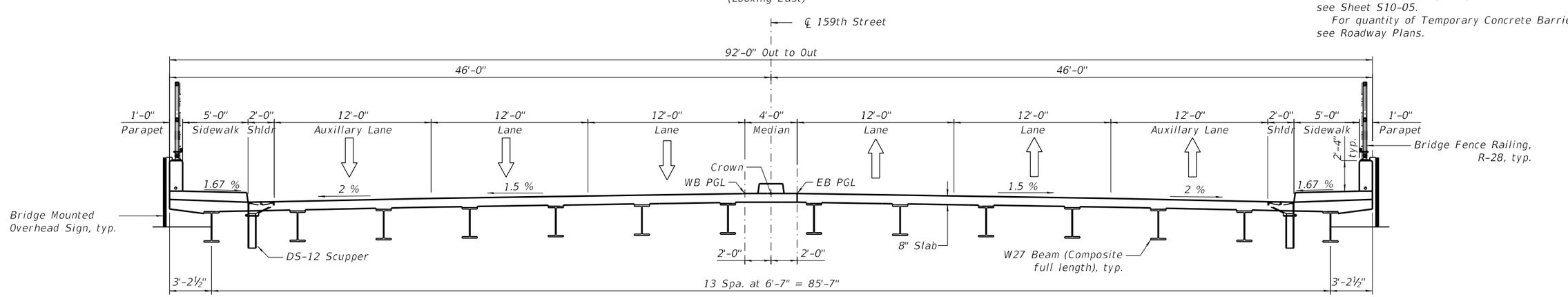

FINAL CROSS SECTION

(Looking East)

USER NAME =	DESIGNED - BJD	REVISED -	
	CHECKED - MGH	REVISED -	
PLOT SCALE =	DRAWN - GM	REVISED -	
PLOT DATE =	CHECKED - BJD	REVISED -	

STATE OF ILLINOIS
DEPARTMENT OF TRANSPORTATION

STAGE CONSTRUCTION DETAILS - 2
STRUCTURE NO. 016-0388

SHEET S10-04 OF S10-37 SHEETS

FAP RTE.	SECTION	COUNTY	TOTAL SHEETS	SHEET NO.
581	(42-B-11-1) BR, BJR 24	COOK	761	702

CONTRACT NO. 62W87

ILLINOIS | FED. AID PROJECT

MODEL: Default
FILE NAME: pw:\\wsp-us-pw.bentley.com:wsp-us-pw-IL\Documents\Project IDOT 2050082201 - IDOT District 1 Various\Structures\Work Order 1\016-0388 - 159th over I-94\Sheets\04_016-0388-Construction Staging.dgn

1/23/2025 11:44:22 AM

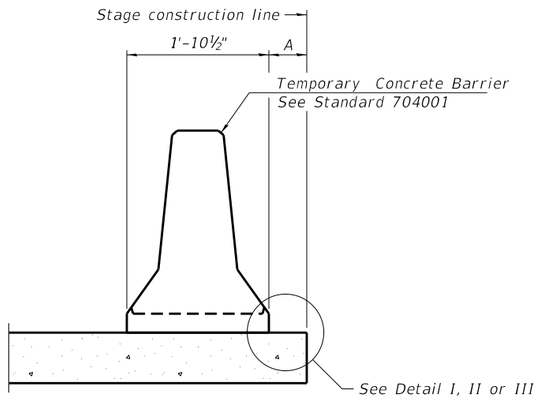

When "A" is 3'-1" or less, the temporary concrete barrier shall be restrained to the new slab according to Detail I, II or III. No restraint is required when "A" is greater than 3'-1".

NEW SLAB OR NEW DECK BEAM

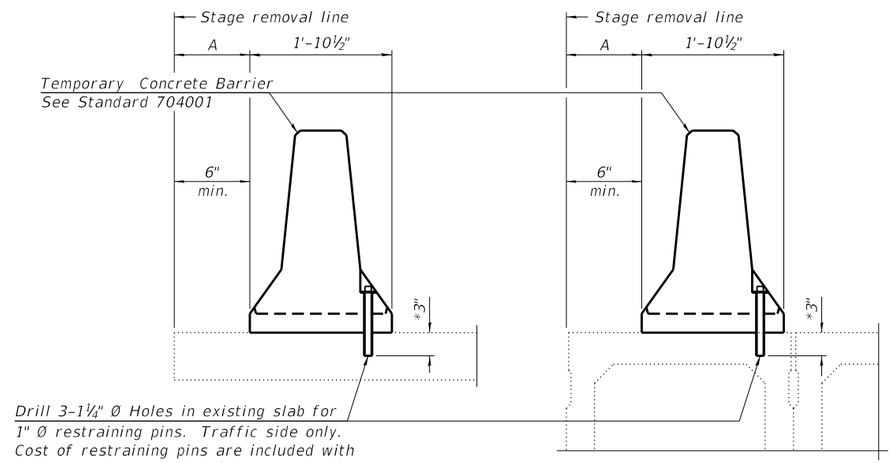

Drill 3-1¼" Ø Holes in existing slab for 1" Ø restraining pins. Traffic side only. Cost of restraining pins are included with Temporary Concrete Barrier. No restraint is required when "A" is greater than 3'-1".

EXISTING SLAB

*When hot-mix asphalt wearing surface is present, embedment shall be 3" plus the wearing surface depth.

EXISTING DECK BEAM

SECTIONS THRU SLAB OR DECK BEAM

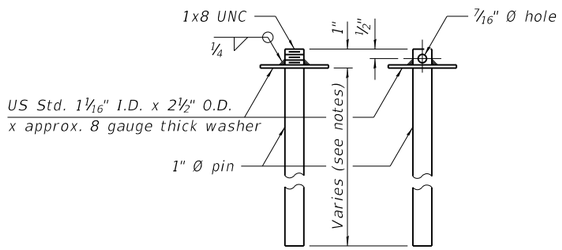

RESTRAINING PIN

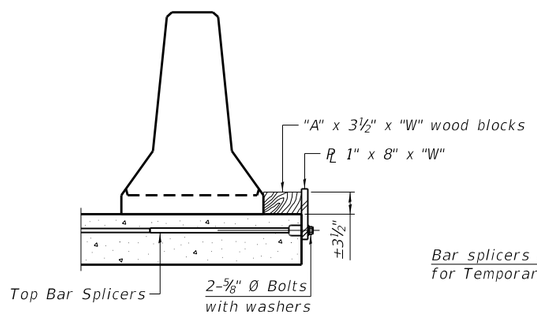

DETAIL I

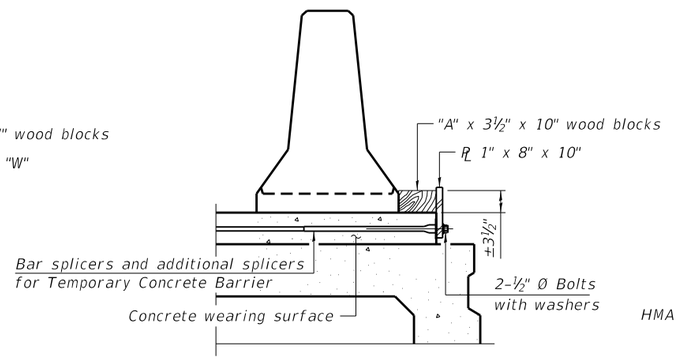

DETAIL II

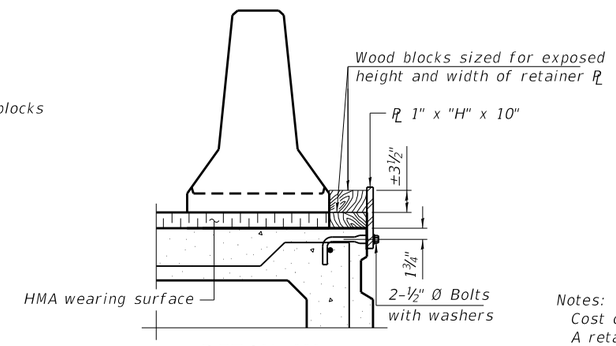

DETAIL III

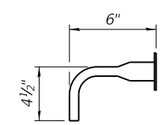

BAR SPLICER FOR #4 BAR - DETAIL III

Notes:

Cost of retainer assembly is included with Temporary Concrete Barrier.

A retainer assembly shall be located at the approximate ℄ of each temporary concrete barrier.

The retainer plate shall not be removed until the concrete on the adjacent stage is ready to be poured. For Detail III applications the retainer plate shall not be removed until just prior to placing the adjacent beam.

When the 'A' dimension is less than 1½", the wood block shall be omitted and the barrier shall be placed in direct contact with the steel retainer plate. For deck beam applications the minimum required 'A' distance is 6" to accommodate the shear key clamping device.

Detail I - Installation for a new bridge deck or bridge slab.

Detail II - Installation for a new deck beam with an initial concrete wearing surface. Additional bar splicers shall be provided at 6'-0" centers and paired with the bar splicers of the concrete wearing surface reinforcement to accommodate the installation of the retainer assemblies. The cost of the additional bar splicers is included with the concrete wearing surface.

Detail III - Installation for a new deck beam with no initial wearing surface or with an initial hot-mix asphalt (HMA) wearing surface present. The deck beam directly beneath the temporary concrete barrier shall be fabricated with bar splicer inserts in the side of the beam, as detailed, to accommodate the installation of the retainer assemblies. A pair of bar splicers, 6" apart, shall be placed at 6'-0" centers along the length of the beam. The cost of the bar splicers is included with the deck beam.

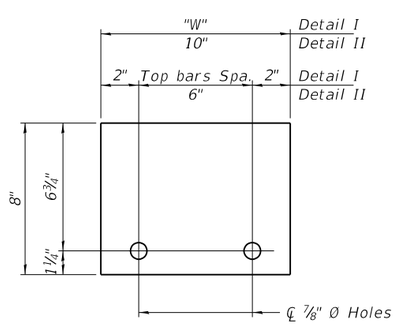

STEEL RETAINER PL 1" x 8" x "W"

(Detail I)

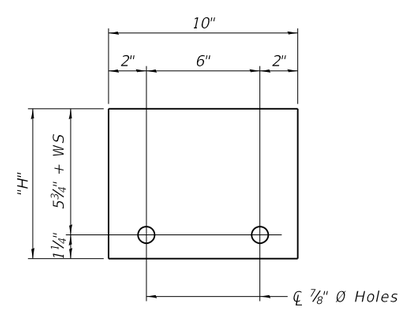

STEEL RETAINER PL 1" x "H" x 10"

(Detail III)

RAILING CRITERIA

NCHRP 350 Test Level	3
Railing Weight (plf)	440

R-27 5-15-2023

USER NAME =	DESIGNED - BJD	REVISED -	STATE OF ILLINOIS DEPARTMENT OF TRANSPORTATION
	CHECKED - MGH	REVISED -	
PLOT SCALE =	DRAWN - GM	REVISED -	
PLOT DATE =	CHECKED - BJD	REVISED -	

TEMPORARY CONCRETE BARRIER FOR STAGE CONSTRUCTION
STRUCTURE NO. 016-0388

SHEET S10-05 OF S10-37 SHEETS

FAP RTE.	SECTION	COUNTY	TOTAL SHEETS	SHEET NO.
581	(42-B-11-1) BR, BJR 24	COOK	761	703
		CONTRACT NO. 62W87		
	ILLINOIS	FED. AID PROJECT		

MODEL: Default
FILE NAME: pw:\\wsp-us-pw.bentley.com:wsp-us-pw-ILD\Documents\Project IDOT 2050082201 - IDOT District 1 Various\Structures\Work Order 11016-0388 - 159th over I-94\Sheets\05_016-0388-TemporaryConcreteBarrier.dgn

1/23/2025 11:44:27 AM

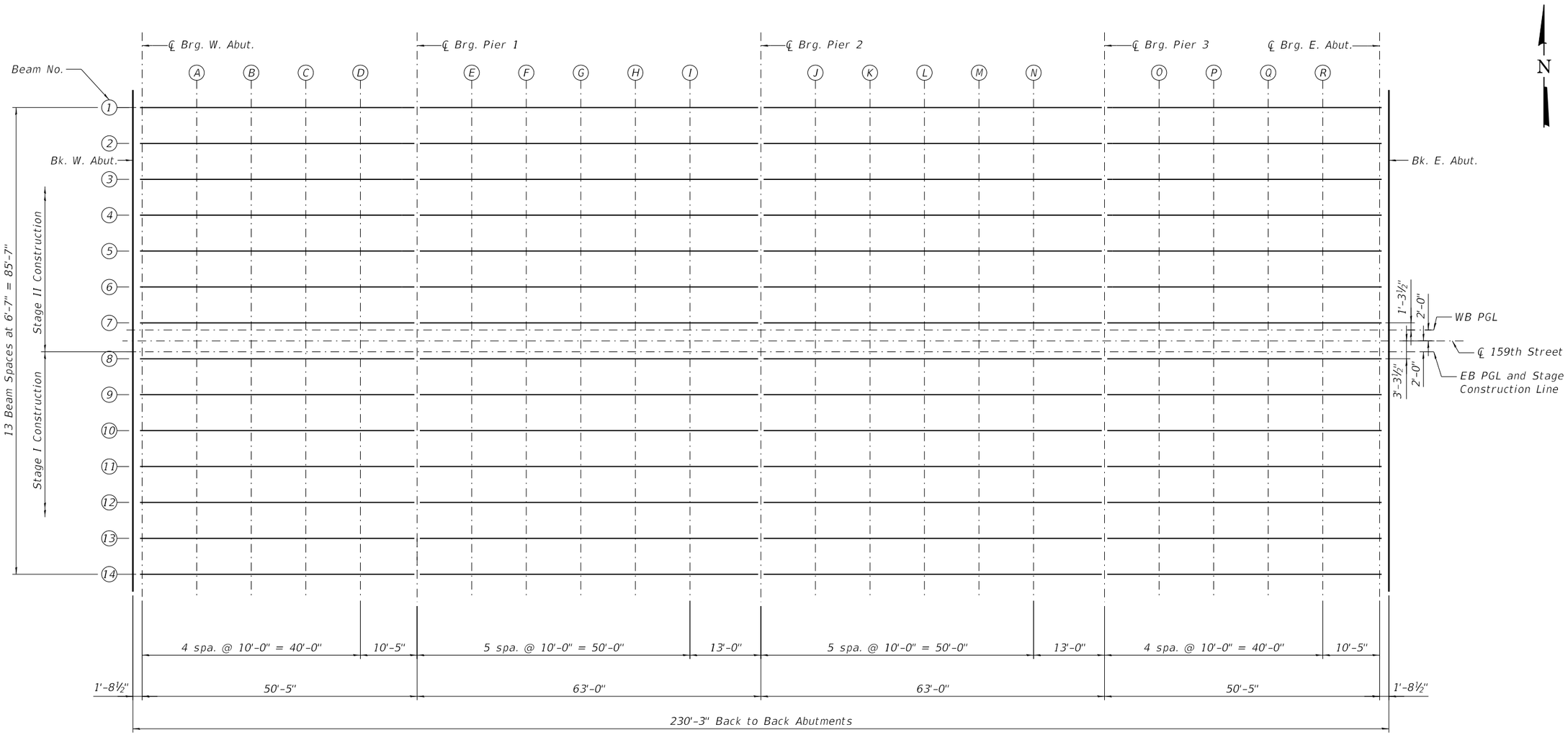

PLAN

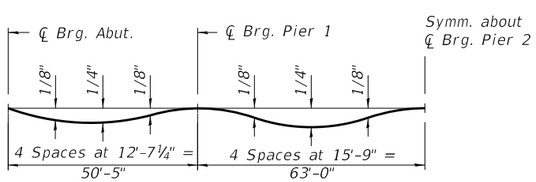

DEAD LOAD DEFLECTION DIAGRAM

(Includes weight of concrete only.)

Note:
The above deflections are not to be used in the field if the engineer is working from the grade elevations adjusted for dead load deflections as shown on Sheets S10-07 to S10-09 of S10-37.

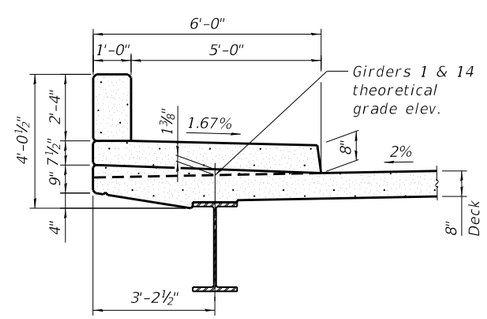

SECTION THRU SIDEWALK

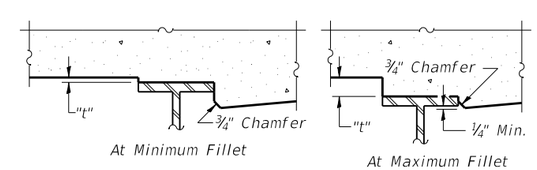

To determine "t": After all structural steel has been erected, elevations of the top flanges of the beams shall be taken at intervals shown above. These elevations subtracted from the "Theoretical Grade Elevations Adjusted for Dead Load Deflection" shown on Sheets S10-07 to S10-09 of S10-37, minus slab thickness, equals the fillet heights "t" above top flange of beams.

FILLET HEIGHTS

USER NAME =	DESIGNED - BJD	REVISED -	
	CHECKED - MGH	REVISED -	
PLOT SCALE =	DRAWN - GM	REVISED -	
PLOT DATE =	CHECKED - BJD	REVISED -	

STATE OF ILLINOIS
DEPARTMENT OF TRANSPORTATION

TOP OF DECK SLAB ELEVATION LAYOUT
STRUCTURE NO. 016-0388

SHEET S10-06 OF S10-37 SHEETS

FAP RTE.	SECTION	COUNTY	TOTAL SHEETS	SHEET NO.
581	(42-B-11-1) BR, BJR 24	COOK	761	704
		CONTRACT NO. 62W87		
	ILLINOIS	FED. AID PROJECT		

MODEL: Default
FILE NAME: pw:\\wsp-us-pw.bentley.com:wsp-us-pw-ILLDocuments\Project IDOT 2050082201 - IDOT District 1 Various\Structures\Work Order 1\016-0388 - 159th over I-94\Sheets\06_016-0388 - Top of Deck Slab Layout

1/23/2025 11:44:32 AM

BEAM 1

Location	Station	Offset	Theoretical Grade Elevations	Theoretical Grade Elevations Adjusted For Dead Load Deflection
Back W. Abut.	1342 + 60.29	-42.79	614.45	614.45
CL Brg. W. Abut.	1342 + 62.00	-42.79	614.48	614.48
A	1342 + 72.00	-42.79	614.62	614.62
B	1342 + 82.00	-42.79	614.74	614.76
C	1342 + 92.00	-42.79	614.86	614.87
D	1343 + 02.00	-42.79	614.96	614.97
CL Brg. Pier 1	1343 + 12.42	-42.79	615.05	615.05
E	1343 + 22.42	-42.79	615.13	615.14
F	1343 + 32.42	-42.79	615.20	615.21
G	1343 + 42.42	-42.79	615.25	615.27
H	1343 + 52.42	-42.79	615.29	615.30
I	1343 + 62.42	-42.79	615.32	615.33
CL Brg. Pier 2	1343 + 75.42	-42.79	615.33	615.33
J	1343 + 85.42	-42.79	615.33	615.34
K	1343 + 95.42	-42.79	615.32	615.33
L	1344 + 05.42	-42.79	615.29	615.31
M	1344 + 15.42	-42.79	615.25	615.27
N	1344 + 25.42	-42.79	615.20	615.21
CL Brg. Pier 3	1344 + 38.42	-42.79	615.12	615.12
O	1344 + 48.42	-42.79	615.04	615.05
P	1344 + 58.42	-42.79	614.95	614.96
Q	1344 + 68.42	-42.79	614.84	614.86
R	1344 + 78.42	-42.79	614.73	614.74
CL Brg. E. Abut.	1344 + 88.83	-42.79	614.59	614.59
Bk. E. Abut.	1344 + 90.54	-42.79	614.57	614.57

BEAM 2

Location	Station	Offset	Theoretical Grade Elevations	Theoretical Grade Elevations Adjusted For Dead Load Deflection
Back W. Abut.	1342 + 60.29	-36.21	614.58	614.58
CL Brg. W. Abut.	1342 + 62.00	-36.21	614.61	614.61
A	1342 + 72.00	-36.21	614.75	614.76
B	1342 + 82.00	-36.21	614.87	614.89
C	1342 + 92.00	-36.21	614.99	615.01
D	1343 + 02.00	-36.21	615.09	615.10
CL Brg. Pier 1	1343 + 12.42	-36.21	615.19	615.19
E	1343 + 22.42	-36.21	615.26	615.27
F	1343 + 32.42	-36.21	615.33	615.34
G	1343 + 42.42	-36.21	615.38	615.40
H	1343 + 52.42	-36.21	615.42	615.43
I	1343 + 62.42	-36.21	615.45	615.46
CL Brg. Pier 2	1343 + 75.42	-36.21	615.46	615.46
J	1343 + 85.42	-36.21	615.46	615.47
K	1343 + 95.42	-36.21	615.45	615.46
L	1344 + 05.42	-36.21	615.42	615.44
M	1344 + 15.42	-36.21	615.39	615.40
N	1344 + 25.42	-36.21	615.33	615.35
CL Brg. Pier 3	1344 + 38.42	-36.21	615.25	615.25
O	1344 + 48.42	-36.21	615.17	615.18
P	1344 + 58.42	-36.21	615.08	615.09
Q	1344 + 68.42	-36.21	614.97	614.99
R	1344 + 78.42	-36.21	614.86	614.87
CL Brg. E. Abut.	1344 + 88.83	-36.21	614.72	614.72
Bk. E. Abut.	1344 + 90.54	-36.21	614.70	614.70

BEAM 3

Location	Station	Offset	Theoretical Grade Elevations	Theoretical Grade Elevations Adjusted For Dead Load Deflection
Back W. Abut.	1342 + 60.29	-29.63	614.71	614.71
CL Brg. W. Abut.	1342 + 62.00	-29.63	614.74	614.74
A	1342 + 72.00	-29.63	614.88	614.89
B	1342 + 82.00	-29.63	615.01	615.02
C	1342 + 92.00	-29.63	615.12	615.14
D	1343 + 02.00	-29.63	615.22	615.23
CL Brg. Pier 1	1343 + 12.42	-29.63	615.32	615.32
E	1343 + 22.42	-29.63	615.39	615.40
F	1343 + 32.42	-29.63	615.46	615.47
G	1343 + 42.42	-29.63	615.51	615.53
H	1343 + 52.42	-29.63	615.55	615.57
I	1343 + 62.42	-29.63	615.58	615.59
CL Brg. Pier 2	1343 + 75.42	-29.63	615.60	615.60
J	1343 + 85.42	-29.63	615.59	615.60
K	1343 + 95.42	-29.63	615.58	615.59
L	1344 + 05.42	-29.63	615.56	615.57
M	1344 + 15.42	-29.63	615.52	615.53
N	1344 + 25.42	-29.63	615.47	615.48
CL Brg. Pier 3	1344 + 38.42	-29.63	615.38	615.38
O	1344 + 48.42	-29.63	615.30	615.31
P	1344 + 58.42	-29.63	615.21	615.23
Q	1344 + 68.42	-29.63	615.11	615.12
R	1344 + 78.42	-29.63	614.99	615.00
CL Brg. E. Abut.	1344 + 88.83	-29.63	614.85	614.85
Bk. E. Abut.	1344 + 90.54	-29.63	614.83	614.83

BEAM 4

Location	Station	Offset	Theoretical Grade Elevations	Theoretical Grade Elevations Adjusted For Dead Load Deflection
Back W. Abut.	1342 + 60.29	-23.04	614.83	614.83
CL Brg. W. Abut.	1342 + 62.00	-23.04	614.86	614.86
A	1342 + 72.00	-23.04	615.00	615.00
B	1342 + 82.00	-23.04	615.12	615.14
C	1342 + 92.00	-23.04	615.24	615.26
D	1343 + 02.00	-23.04	615.34	615.35
CL Brg. Pier 1	1343 + 12.42	-23.04	615.43	615.43
E	1343 + 22.42	-23.04	615.51	615.52
F	1343 + 32.42	-23.04	615.58	615.59
G	1343 + 42.42	-23.04	615.63	615.65
H	1343 + 52.42	-23.04	615.67	615.68
I	1343 + 62.42	-23.04	615.70	615.71
CL Brg. Pier 2	1343 + 75.42	-23.04	615.71	615.71
J	1343 + 85.42	-23.04	615.71	615.72
K	1343 + 95.42	-23.04	615.70	615.71
L	1344 + 05.42	-23.04	615.67	615.69
M	1344 + 15.42	-23.04	615.63	615.65
N	1344 + 25.42	-23.04	615.58	615.59
CL Brg. Pier 3	1344 + 38.42	-23.04	615.50	615.50
O	1344 + 48.42	-23.04	615.42	615.43
P	1344 + 58.42	-23.04	615.33	615.34
Q	1344 + 68.42	-23.04	615.22	615.24
R	1344 + 78.42	-23.04	615.11	615.12
CL Brg. E. Abut.	1344 + 88.83	-23.04	614.97	614.97
Bk. E. Abut.	1344 + 90.54	-23.04	614.95	614.95

BEAM 5

Location	Station	Offset	Theoretical Grade Elevations	Theoretical Grade Elevations Adjusted For Dead Load Deflection
Back W. Abut.	1342 + 60.29	-16.46	614.93	614.93
CL Brg. W. Abut.	1342 + 62.00	-16.46	614.96	614.96
A	1342 + 72.00	-16.46	615.09	615.10
B	1342 + 82.00	-16.46	615.22	615.24
C	1342 + 92.00	-16.46	615.34	615.35
D	1343 + 02.00	-16.46	615.44	615.45
CL Brg. Pier 1	1343 + 12.42	-16.46	615.53	615.53
E	1343 + 22.42	-16.46	615.61	615.62
F	1343 + 32.42	-16.46	615.67	615.69
G	1343 + 42.42	-16.46	615.73	615.75
H	1343 + 52.42	-16.46	615.77	615.78
I	1343 + 62.42	-16.46	615.79	615.81
CL Brg. Pier 2	1343 + 75.42	-16.46	615.81	615.81
J	1343 + 85.42	-16.46	615.81	615.82
K	1343 + 95.42	-16.46	615.80	615.81
L	1344 + 05.42	-16.46	615.77	615.79
M	1344 + 15.42	-16.46	615.73	615.75
N	1344 + 25.42	-16.46	615.68	615.69
CL Brg. Pier 3	1344 + 38.42	-16.46	615.60	615.60
O	1344 + 48.42	-16.46	615.52	615.53
P	1344 + 58.42	-16.46	615.43	615.44
Q	1344 + 68.42	-16.46	615.32	615.34
R	1344 + 78.42	-16.46	615.20	615.22
CL Brg. E. Abut.	1344 + 88.83	-16.46	615.07	615.07
Bk. E. Abut.	1344 + 90.54	-16.46	615.05	615.05

BEAM 6

Location	Station	Offset	Theoretical Grade Elevations	Theoretical Grade Elevations Adjusted For Dead Load Deflection
Back W. Abut.	1342 + 60.29	-9.88	615.03	615.03
CL Brg. W. Abut.	1342 + 62.00	-9.88	615.05	615.05
A	1342 + 72.00	-9.88	615.19	615.20
B	1342 + 82.00	-9.88	615.32	615.34
C	1342 + 92.00	-9.88	615.44	615.45
D	1343 + 02.00	-9.88	615.54	615.55
CL Brg. Pier 1	1343 + 12.42	-9.88	615.63	615.63
E	1343 + 22.42	-9.88	615.71	615.72
F	1343 + 32.42	-9.88	615.77	615.79
G	1343 + 42.42	-9.88	615.83	615.85
H	1343 + 52.42	-9.88	615.87	615.88
I	1343 + 62.42	-9.88	615.89	615.90
CL Brg. Pier 2	1343 + 75.42	-9.88	615.91	615.91
J	1343 + 85.42	-9.88	615.91	615.92
K	1343 + 95.42	-9.88	615.90	615.91
L	1344 + 05.42	-9.88	615.87	615.89
M	1344 + 15.42	-9.88	615.83	615.85
N	1344 + 25.42	-9.88	615.78	615.79
CL Brg. Pier 3	1344 + 38.42	-9.88	615.70	615.70
O	1344 + 48.42	-9.88	615.62	615.62
P	1344 + 58.42	-9.88	615.52	615.54
Q	1344 + 68.42	-9.88	615.42	615.44
R	1344 + 78.42	-9.88	615.30	615.31
CL Brg. E. Abut.	1344 + 88.83	-9.88	615.17	615.17
Bk. E. Abut.	1344 + 90.54	-9.88	615.15	615.15

Notes:
1. Offsets are measured with respect to the Centerline.
2. Negative offsets are left of the centerline while looking upstation.
3. All Elevations and Offsets are in feet.

E-S

2-17-2017

wsp

USER NAME =	DESIGNED - BJD	REVISED -
	CHECKED - MGH	REVISED -
PLOT SCALE =	DRAWN - GM	REVISED -
PLOT DATE =	CHECKED - BJD	REVISED -

STATE OF ILLINOIS
DEPARTMENT OF TRANSPORTATION

TOP OF SLAB ELEVATIONS - 1
STRUCTURE NO. 016-0388

SHEET S10-07 OF S10-37 SHEETS

FAP RTE.	SECTION	COUNTY	TOTAL SHEETS	SHEET NO.
581	(42-B-11-1) BR, BJR 24	COOK	761	705

CONTRACT NO. 62W87

ILLINOIS | FED. AID PROJECT

MODEL: Default
FILE NAME: pw:\\wsp-us-pw.bentley.com:wsp-us-pw-IL\Documents\Project IDOT 2050082201 - IDOT District 1 Various\Structures\Work Order 1\016-0388 - 159th over I-94\Sheets\07_016-0388 - Top of Deck Slab Elevations 1.dgn

1/23/2025 11:44:36 AM

BEAM 7

Location	Station	Offset	Theoretical Grade Elevations	Theoretical Grade Elevations Adjusted For Dead Load Deflection
Back W. Abut.	1342 + 60.29	-3.29	615.13	615.13
CL Brg. W. Abut.	1342 + 62.00	-3.29	615.15	615.15
A	1342 + 72.00	-3.29	615.29	615.30
B	1342 + 82.00	-3.29	615.42	615.44
C	1342 + 92.00	-3.29	615.53	615.55
D	1343 + 02.00	-3.29	615.64	615.65
CL Brg. Pier 1	1343 + 12.42	-3.29	615.73	615.73
E	1343 + 22.42	-3.29	615.81	615.81
F	1343 + 32.42	-3.29	615.87	615.89
G	1343 + 42.42	-3.29	615.92	615.94
H	1343 + 52.42	-3.29	615.96	615.98
I	1343 + 62.42	-3.29	615.99	616.00
CL Brg. Pier 2	1343 + 75.42	-3.29	616.01	616.01
J	1343 + 85.42	-3.29	616.01	616.01
K	1343 + 95.42	-3.29	615.99	616.01
L	1344 + 05.42	-3.29	615.97	615.99
M	1344 + 15.42	-3.29	615.93	615.95
N	1344 + 25.42	-3.29	615.88	615.89
CL Brg. Pier 3	1344 + 38.42	-3.29	615.79	615.79
O	1344 + 48.42	-3.29	615.72	615.72
P	1344 + 58.42	-3.29	615.62	615.64
Q	1344 + 68.42	-3.29	615.52	615.54
R	1344 + 78.42	-3.29	615.40	615.41
CL Brg. E. Abut.	1344 + 88.83	-3.29	615.27	615.27
Bk. E. Abut.	1344 + 90.54	-3.29	615.24	615.24

WB PGL

Location	Station	Offset	Theoretical Grade Elevations	Theoretical Grade Elevations Adjusted For Dead Load Deflection
Back W. Abut.	1342 + 60.29	-2.00	615.15	615.15
CL Brg. W. Abut.	1342 + 62.00	-2.00	615.17	615.17
A	1342 + 72.00	-2.00	615.31	615.32
B	1342 + 82.00	-2.00	615.44	615.46
C	1342 + 92.00	-2.00	615.55	615.57
D	1343 + 02.00	-2.00	615.66	615.67
CL Brg. Pier 1	1343 + 12.42	-2.00	615.75	615.75
E	1343 + 22.42	-2.00	615.83	615.83
F	1343 + 32.42	-2.00	615.89	615.90
G	1343 + 42.42	-2.00	615.94	615.96
H	1343 + 52.42	-2.00	615.98	616.00
I	1343 + 62.42	-2.00	616.01	616.02
CL Brg. Pier 2	1343 + 75.42	-2.00	616.03	616.03
J	1343 + 85.42	-2.00	616.03	616.03
K	1343 + 95.42	-2.00	616.01	616.03
L	1344 + 05.42	-2.00	615.99	616.01
M	1344 + 15.42	-2.00	615.95	615.96
N	1344 + 25.42	-2.00	615.90	615.91
CL Brg. Pier 3	1344 + 38.42	-2.00	615.81	615.81
O	1344 + 48.42	-2.00	615.73	615.74
P	1344 + 58.42	-2.00	615.64	615.66
Q	1344 + 68.42	-2.00	615.54	615.56
R	1344 + 78.42	-2.00	615.42	615.43
CL Brg. E. Abut.	1344 + 88.83	-2.00	615.29	615.29
Bk. E. Abut.	1344 + 90.54	-2.00	615.26	615.26

CL 159TH ST.

Location	Station	Offset	Theoretical Grade Elevations	Theoretical Grade Elevations Adjusted For Dead Load Deflection
Back W. Abut.	342 + 60.29	0.00	615.11	615.12
CL Brg. W. Abut.	342 + 62.00	0.00	615.14	615.14
A	342 + 72.00	0.00	615.28	615.29
B	342 + 82.00	0.00	615.40	615.42
C	342 + 92.00	0.00	615.52	615.54
D	343 + 02.00	0.00	615.62	615.64
CL Brg. Pier 1	343 + 12.42	0.00	615.72	615.72
E	343 + 22.42	0.00	615.79	615.80
F	343 + 32.42	0.00	615.86	615.88
G	343 + 42.42	0.00	615.91	615.94
H	343 + 52.42	0.00	615.95	615.97
I	343 + 62.42	0.00	615.98	616.00
CL Brg. Pier 2	343 + 75.42	0.00	616.00	616.00
J	343 + 85.42	0.00	616.00	616.01
K	343 + 95.42	0.00	615.98	616.00
L	344 + 05.42	0.00	615.96	615.98
M	344 + 15.42	0.00	615.92	615.94
N	344 + 25.42	0.00	615.87	615.89
CL Brg. Pier 3	344 + 38.42	0.00	615.79	615.79
O	344 + 48.42	0.00	615.71	615.72
P	344 + 58.42	0.00	615.62	615.64
Q	344 + 68.42	0.00	615.51	615.53
R	344 + 78.42	0.00	615.40	615.41
CL Brg. E. Abut.	344 + 88.83	0.00	615.26	615.27
Bk. E. Abut.	344 + 90.54	0.00	615.24	615.24

EB PGL AND STAGE CONSTRUCTION LINE

Location	Station	Offset	Theoretical Grade Elevations	Theoretical Grade Elevations Adjusted For Dead Load Deflection
Back W. Abut.	2342 + 60.29	2.00	615.08	615.08
CL Brg. W. Abut.	2342 + 62.00	2.00	615.11	615.11
A	2342 + 72.00	2.00	615.25	615.26
B	2342 + 82.00	2.00	615.38	615.39
C	2342 + 92.00	2.00	615.49	615.51
D	2343 + 02.00	2.00	615.60	615.61
CL Brg. Pier 1	2343 + 12.42	2.00	615.69	615.69
E	2343 + 22.42	2.00	615.77	615.78
F	2343 + 32.42	2.00	615.84	615.85
G	2343 + 42.42	2.00	615.89	615.91
H	2343 + 52.42	2.00	615.93	615.94
I	2343 + 62.42	2.00	615.96	615.97
CL Brg. Pier 2	2343 + 75.42	2.00	615.98	615.98
J	2343 + 85.42	2.00	615.98	615.98
K	2343 + 95.42	2.00	615.96	615.98
L	2344 + 05.42	2.00	615.94	615.96
M	2344 + 15.42	2.00	615.90	615.92
N	2344 + 25.42	2.00	615.85	615.86
CL Brg. Pier 3	2344 + 38.42	2.00	615.77	615.77
O	2344 + 48.42	2.00	615.69	615.70
P	2344 + 58.42	2.00	615.60	615.62
Q	2344 + 68.42	2.00	615.50	615.51
R	2344 + 78.42	2.00	615.38	615.39
CL Brg. E. Abut.	2344 + 88.83	2.00	615.25	615.25
Bk. E. Abut.	2344 + 90.54	2.00	615.22	615.22

BEAM 8

Location	Station	Offset	Theoretical Grade Elevations	Theoretical Grade Elevations Adjusted For Dead Load Deflection
Back W. Abut.	2342 + 60.29	3.29	615.06	615.06
CL Brg. W. Abut.	2342 + 62.00	3.29	615.09	615.09
A	2342 + 72.00	3.29	615.23	615.24
B	2342 + 82.00	3.29	615.36	615.37
C	2342 + 92.00	3.29	615.47	615.49
D	2343 + 02.00	3.29	615.58	615.59
CL Brg. Pier 1	2343 + 12.42	3.29	615.67	615.67
E	2343 + 22.42	3.29	615.75	615.76
F	2343 + 32.42	3.29	615.82	615.83
G	2343 + 42.42	3.29	615.87	615.89
H	2343 + 52.42	3.29	615.91	615.93
I	2343 + 62.42	3.29	615.94	615.95
CL Brg. Pier 2	2343 + 75.42	3.29	615.96	615.96
J	2343 + 85.42	3.29	615.96	615.96
K	2343 + 95.42	3.29	615.94	615.96
L	2344 + 05.42	3.29	615.92	615.94
M	2344 + 15.42	3.29	615.88	615.90
N	2344 + 25.42	3.29	615.83	615.84
CL Brg. Pier 3	2344 + 38.42	3.29	615.75	615.75
O	2344 + 48.42	3.29	615.67	615.68
P	2344 + 58.42	3.29	615.58	615.60
Q	2344 + 68.42	3.29	615.48	615.49
R	2344 + 78.42	3.29	615.36	615.37
CL Brg. E. Abut.	2344 + 88.83	3.29	615.23	615.23
Bk. E. Abut.	2344 + 90.54	3.29	615.20	615.20

BEAM 9

Location	Station	Offset	Theoretical Grade Elevations	Theoretical Grade Elevations Adjusted For Dead Load Deflection
Back W. Abut.	2342 + 60.29	9.88	614.97	614.97
CL Brg. W. Abut.	2342 + 62.00	9.88	614.99	614.99
A	2342 + 72.00	9.88	615.13	615.14
B	2342 + 82.00	9.88	615.26	615.28
C	2342 + 92.00	9.88	615.38	615.39
D	2343 + 02.00	9.88	615.48	615.49
CL Brg. Pier 1	2343 + 12.42	9.88	615.57	615.57
E	2343 + 22.42	9.88	615.65	615.66
F	2343 + 32.42	9.88	615.72	615.73
G	2343 + 42.42	9.88	615.77	615.79
H	2343 + 52.42	9.88	615.81	615.83
I	2343 + 62.42	9.88	615.84	615.85
CL Brg. Pier 2	2343 + 75.42	9.88	615.86	615.86
J	2343 + 85.42	9.88	615.86	615.86
K	2343 + 95.42	9.88	615.85	615.86
L	2344 + 05.42	9.88	615.82	615.84
M	2344 + 15.42	9.88	615.78	615.80
N	2344 + 25.42	9.88	615.73	615.74
CL Brg. Pier 3	2344 + 38.42	9.88	615.65	615.65
O	2344 + 48.42	9.88	615.57	615.58
P	2344 + 58.42	9.88	615.48	615.50
Q	2344 + 68.42	9.88	615.38	615.39
R	2344 + 78.42	9.88	615.26	615.27
CL Brg. E. Abut.	2344 + 88.83	9.88	615.13	615.13
Bk. E. Abut.	2344 + 90.54	9.88	615.11	615.11

Notes:
1. Offsets are measured with respect to the Centerline.
2. Negative offsets are left of the centerline while looking upstation.
3. All Elevations and Offsets are in feet.

E-S 2-17-2017

wsp

USER NAME =	DESIGNED - BJD	REVISED -
	CHECKED - MGH	REVISED -
PLOT SCALE =	DRAWN - GM	REVISED -
PLOT DATE =	CHECKED - BJD	REVISED -

STATE OF ILLINOIS
DEPARTMENT OF TRANSPORTATION

TOP OF SLAB ELEVATIONS - 2
STRUCTURE NO. 016-0388

SHEET S10-08 OF S10-37 SHEETS

FAP RTE.	SECTION	COUNTY	TOTAL SHEETS	SHEET NO.
581	(42-B-11-1) BR, BJR 24	COOK	761	706

CONTRACT NO. 62W87

ILLINOIS FED. AID PROJECT

MODEL: Default
FILE NAME: pw:\\wsp-us-pw.bentley.com:wsp-us-pw-IL\Documents\Project IDOT 2050082201 - IDOT District 1 Various\Structures\Work Order 11016-0388 - 159th over I-94\Sheets\08_016-0388 - Top of Deck Slab Elevations 2.dgn

1/23/2025 11:44:41 AM

BEAM 10

Location	Station	Offset	Theoretical Grade Elevations	Theoretical Grade Elevations Adjusted For Dead Load Deflection
Back W. Abut.	2342 + 60.29	16.46	614.87	614.87
CL Brg. W. Abut.	2342 + 62.00	16.46	614.89	614.89
A	2342 + 72.00	16.46	615.03	615.04
B	2342 + 82.00	16.46	615.16	615.18
C	2342 + 92.00	16.46	615.28	615.29
D	2343 + 02.00	16.46	615.38	615.39
CL Brg. Pier 1	2343 + 12.42	16.46	615.47	615.47
E	2343 + 22.42	16.46	615.55	615.56
F	2343 + 32.42	16.46	615.62	615.63
G	2343 + 42.42	16.46	615.67	615.69
H	2343 + 52.42	16.46	615.71	615.73
I	2343 + 62.42	16.46	615.74	615.75
CL Brg. Pier 2	2343 + 75.42	16.46	615.76	615.76
J	2343 + 85.42	16.46	615.76	615.77
K	2343 + 95.42	16.46	615.75	615.76
L	2344 + 05.42	16.46	615.72	615.74
M	2344 + 15.42	16.46	615.68	615.70
N	2344 + 25.42	16.46	615.63	615.65
CL Brg. Pier 3	2344 + 38.42	16.46	615.55	615.55
O	2344 + 48.42	16.46	615.47	615.48
P	2344 + 58.42	16.46	615.38	615.40
Q	2344 + 68.42	16.46	615.28	615.30
R	2344 + 78.42	16.46	615.16	615.17
CL Brg. E. Abut.	2344 + 88.83	16.46	615.03	615.03
Bk. E. Abut.	2344 + 90.54	16.46	615.01	615.01

BEAM 11

Location	Station	Offset	Theoretical Grade Elevations	Theoretical Grade Elevations Adjusted For Dead Load Deflection
Back W. Abut.	2342 + 60.29	23.04	614.77	614.77
CL Brg. W. Abut.	2342 + 62.00	23.04	614.79	614.79
A	2342 + 72.00	23.04	614.93	614.94
B	2342 + 82.00	23.04	615.06	615.08
C	2342 + 92.00	23.04	615.18	615.19
D	2343 + 02.00	23.04	615.28	615.29
CL Brg. Pier 1	2343 + 12.42	23.04	615.38	615.38
E	2343 + 22.42	23.04	615.45	615.46
F	2343 + 32.42	23.04	615.52	615.53
G	2343 + 42.42	23.04	615.57	615.59
H	2343 + 52.42	23.04	615.61	615.63
I	2343 + 62.42	23.04	615.64	615.65
CL Brg. Pier 2	2343 + 75.42	23.04	615.66	615.66
J	2343 + 85.42	23.04	615.66	615.67
K	2343 + 95.42	23.04	615.65	615.66
L	2344 + 05.42	23.04	615.62	615.64
M	2344 + 15.42	23.04	615.59	615.60
N	2344 + 25.42	23.04	615.54	615.55
CL Brg. Pier 3	2344 + 38.42	23.04	615.45	615.45
O	2344 + 48.42	23.04	615.37	615.38
P	2344 + 58.42	23.04	615.28	615.30
Q	2344 + 68.42	23.04	615.18	615.20
R	2344 + 78.42	23.04	615.06	615.08
CL Brg. E. Abut.	2344 + 88.83	23.04	614.93	614.93
Bk. E. Abut.	2344 + 90.54	23.04	614.91	614.91

BEAM 12

Location	Station	Offset	Theoretical Grade Elevations	Theoretical Grade Elevations Adjusted For Dead Load Deflection
Back W. Abut.	2342 + 60.29	29.63	614.65	614.65
CL Brg. W. Abut.	2342 + 62.00	29.63	614.68	614.68
A	2342 + 72.00	29.63	614.82	614.83
B	2342 + 82.00	29.63	614.95	614.96
C	2342 + 92.00	29.63	615.06	615.08
D	2343 + 02.00	29.63	615.16	615.18
CL Brg. Pier 1	2343 + 12.42	29.63	615.26	615.26
E	2343 + 22.42	29.63	615.34	615.34
F	2343 + 32.42	29.63	615.40	615.42
G	2343 + 42.42	29.63	615.46	615.48
H	2343 + 52.42	29.63	615.50	615.51
I	2343 + 62.42	29.63	615.53	615.54
CL Brg. Pier 2	2343 + 75.42	29.63	615.54	615.54
J	2343 + 85.42	29.63	615.54	615.55
K	2343 + 95.42	29.63	615.53	615.54
L	2344 + 05.42	29.63	615.51	615.53
M	2344 + 15.42	29.63	615.47	615.48
N	2344 + 25.42	29.63	615.42	615.43
CL Brg. Pier 3	2344 + 38.42	29.63	615.34	615.34
O	2344 + 48.42	29.63	615.26	615.27
P	2344 + 58.42	29.63	615.17	615.18
Q	2344 + 68.42	29.63	615.06	615.08
R	2344 + 78.42	29.63	614.95	614.96
CL Brg. E. Abut.	2344 + 88.83	29.63	614.81	614.81
Bk. E. Abut.	2344 + 90.54	29.63	614.79	614.79

BEAM 13

Location	Station	Offset	Theoretical Grade Elevations	Theoretical Grade Elevations Adjusted For Dead Load Deflection
Back W. Abut.	2342 + 60.29	36.21	614.52	614.52
CL Brg. W. Abut.	2342 + 62.00	36.21	614.54	614.54
A	2342 + 72.00	36.21	614.69	614.69
B	2342 + 82.00	36.21	614.81	614.83
C	2342 + 92.00	36.21	614.93	614.95
D	2343 + 02.00	36.21	615.03	615.04
CL Brg. Pier 1	2343 + 12.42	36.21	615.13	615.13
E	2343 + 22.42	36.21	615.21	615.21
F	2343 + 32.42	36.21	615.27	615.28
G	2343 + 42.42	36.21	615.32	615.34
H	2343 + 52.42	36.21	615.37	615.38
I	2343 + 62.42	36.21	615.39	615.40
CL Brg. Pier 2	2343 + 75.42	36.21	615.41	615.41
J	2343 + 85.42	36.21	615.41	615.42
K	2343 + 95.42	36.21	615.40	615.41
L	2344 + 05.42	36.21	615.37	615.39
M	2344 + 15.42	36.21	615.34	615.35
N	2344 + 25.42	36.21	615.29	615.30
CL Brg. Pier 3	2344 + 38.42	36.21	615.20	615.20
O	2344 + 48.42	36.21	615.13	615.13
P	2344 + 58.42	36.21	615.03	615.05
Q	2344 + 68.42	36.21	614.93	614.95
R	2344 + 78.42	36.21	614.82	614.83
CL Brg. E. Abut.	2344 + 88.83	36.21	614.68	614.68
Bk. E. Abut.	2344 + 90.54	36.21	614.66	614.66

BEAM 14

Location	Station	Offset	Theoretical Grade Elevations	Theoretical Grade Elevations Adjusted For Dead Load Deflection
Back W. Abut.	2342 + 60.29	42.79	614.39	614.39
CL Brg. W. Abut.	2342 + 62.00	42.79	614.41	614.41
A	2342 + 72.00	42.79	614.55	614.56
B	2342 + 82.00	42.79	614.68	614.70
C	2342 + 92.00	42.79	614.80	614.81
D	2343 + 02.00	42.79	614.90	614.91
CL Brg. Pier 1	2343 + 12.42	42.79	615.00	615.00
E	2343 + 22.42	42.79	615.07	615.08
F	2343 + 32.42	42.79	615.14	615.15
G	2343 + 42.42	42.79	615.19	615.21
H	2343 + 52.42	42.79	615.23	615.25
I	2343 + 62.42	42.79	615.26	615.27
CL Brg. Pier 2	2343 + 75.42	42.79	615.28	615.28
J	2343 + 85.42	42.79	615.28	615.29
K	2343 + 95.42	42.79	615.27	615.28
L	2344 + 05.42	42.79	615.24	615.26
M	2344 + 15.42	42.79	615.21	615.22
N	2344 + 25.42	42.79	615.16	615.17
CL Brg. Pier 3	2344 + 38.42	42.79	615.07	615.07
O	2344 + 48.42	42.79	614.99	615.00
P	2344 + 58.42	42.79	614.90	614.92
Q	2344 + 68.42	42.79	614.80	614.82
R	2344 + 78.42	42.79	614.68	614.70
CL Brg. E. Abut.	2344 + 88.83	42.79	614.55	614.55
Bk. E. Abut.	2344 + 90.54	42.79	614.53	614.53

Notes:
1. Offsets are measured with respect to the Centerline.
2. Negative offsets are left of the centerline while looking upstation.
3. All Elevations and Offsets are in feet.

E-S 2-17-2017

NORTH EDGE OF SHOULDER

Location	Station	Offset	Theoretical Grade Elevations
W. End of W. Approach	1342 + 30.54	-40.00	614.01
A1	1342 + 40.54	-40.00	614.19
A2	1342 + 50.54	-40.00	614.36
E. End of W. Approach	1342 + 60.54	-40.00	614.51

NORTH EDGE OF ROADWAY

Location	Station	Offset	Theoretical Grade Elevations
W. End of W. Approach	1342 + 30.54	-38.00	614.05
A1	1342 + 40.54	-38.00	614.23
A2	1342 + 50.54	-38.00	614.40
E. End of W. Approach	1342 + 60.54	-38.00	614.55

WB PGL

Location	Station	Offset	Theoretical Grade Elevations
W. End of W. Approach	1342 + 30.54	-2.00	614.65
A1	1342 + 40.54	-2.00	614.83
A2	1342 + 50.54	-2.00	615.00
E. End of W. Approach	1342 + 60.54	-2.00	615.15

CL 159TH ST

Location	Station	Offset	Theoretical Grade Elevations
W. End of W. Approach	342 + 30.54	0.00	614.62
A1	342 + 40.54	0.00	614.80
A2	342 + 50.54	0.00	614.96
E. End of W. Approach	342 + 60.54	0.00	615.12

EB PGL AND STAGE CONSTRUCTION LINE

Location	Station	Offset	Theoretical Grade Elevations
W. End of W. Approach	2342 + 30.54	2.00	614.58
A1	2342 + 40.54	2.00	614.76
A2	2342 + 50.54	2.00	614.93
E. End of W. Approach	2342 + 60.54	2.00	615.09

SOUTH EDGE OF ROADWAY

Location	Station	Offset	Theoretical Grade Elevations
W. End of W. Approach	2342 + 30.54	38.00	614.98
A1	2342 + 40.54	38.00	614.16
A2	2342 + 50.54	38.00	614.33
E. End of W. Approach	2342 + 60.54	38.00	614.49

SOUTH EDGE OF SHOULDER

Location	Station	Offset	Theoretical Grade Elevations
W. End of W. Approach	2342 + 30.54	40.00	613.94
A1	2342 + 40.54	40.00	614.12
A2	2342 + 50.54	40.00	614.29
E. End of W. Approach	2342 + 60.54	40.00	614.45

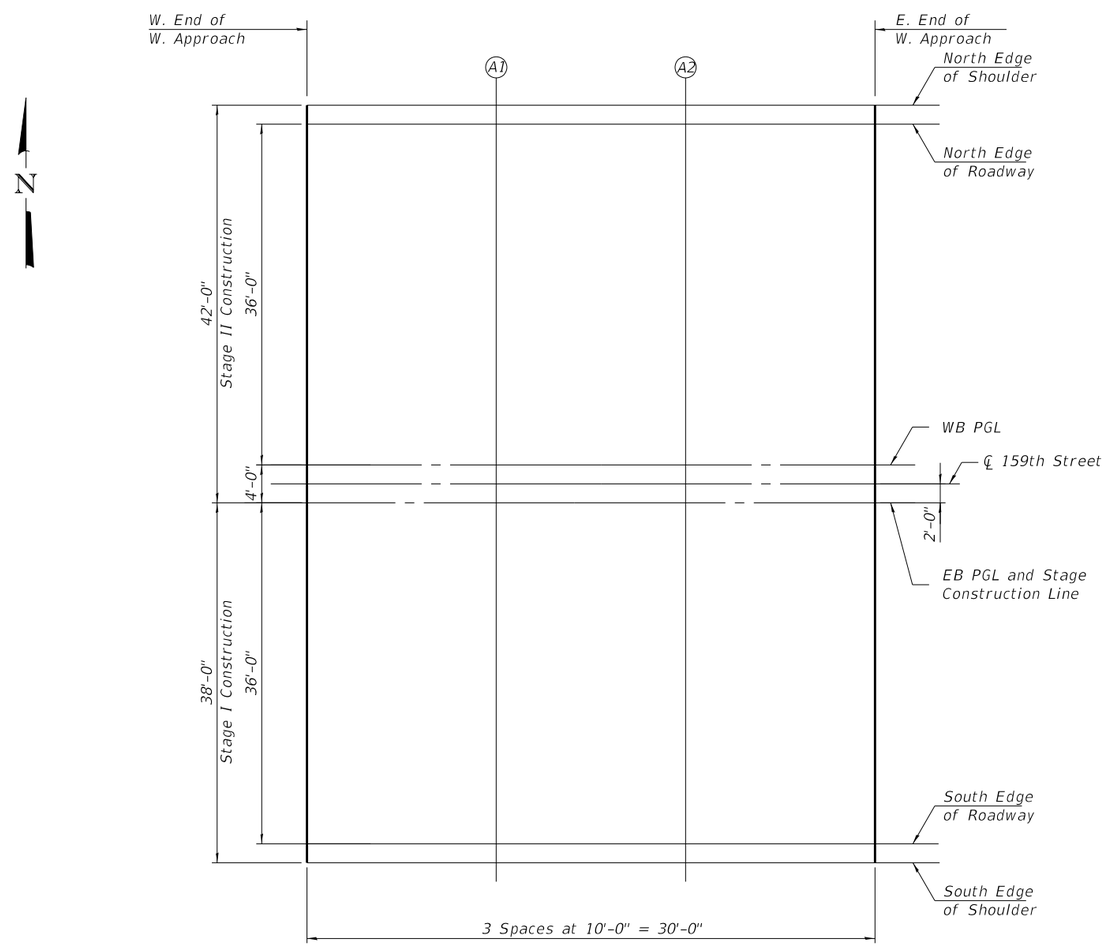

PLAN

Notes:
1. Offsets are measured with respect to the Centerline.
2. Negative offsets are left of the centerline while looking upstation.
3. All Elevations and Offsets are in feet.

MODEL: Default
FILE NAME: pw:\\wsp-us-pw.bentley.com:wsp-us-pw-ILLDocuments\Project IDOT 2050082201 - IDOT District 1 Various\Structures\Work Order 1\016-0388 - 159th over I-94\Sheets\10_016-0388 - Top of West Approach Slab Elevations.dgn

3/11/2025 12:46:03 PM

USER NAME =	DESIGNED - BJD	REVISED -	
	CHECKED - MGH	REVISED -	
PLOT SCALE =	DRAWN - GM	REVISED -	
PLOT DATE =	CHECKED - BJD	REVISED -	

STATE OF ILLINOIS
DEPARTMENT OF TRANSPORTATION

TOP OF WEST APPROACH SLAB ELEVATIONS
STRUCTURE NO. 016-0388

SHEET S10-10 OF S10-37 SHEETS

FAP RTE.	SECTION	COUNTY	TOTAL SHEETS	SHEET NO.
581	(42-B-11-1) BR, BJR 24	COOK	761	708

CONTRACT NO. 62W87

ILLINOIS | FED. AID PROJECT

NORTH EDGE OF SHOULDER

Location	Station	Offset	Theoretical Grade Elevations
W. End of E. Approach	1344 + 90.29	-40.00	614.63
A3	1345 + 00.29	-40.00	614.48
A4	1345 + 10.29	-40.00	614.33
E. End of E. Approach	1345 + 20.29	-40.00	614.16

NORTH EDGE OF ROADWAY

Location	Station	Offset	Theoretical Grade Elevations
W. End of E. Approach	1344 + 90.29	-38.00	614.67
A3	1345 + 00.29	-38.00	614.52
A4	1345 + 10.29	-38.00	614.37
E. End of E. Approach	1345 + 20.29	-38.00	614.20

WB PGL

Location	Station	Offset	Theoretical Grade Elevations
W. End of E. Approach	1344 + 90.29	-2.00	615.27
A3	1345 + 00.29	-2.00	615.12
A4	1345 + 10.29	-2.00	614.97
E. End of E. Approach	1345 + 20.29	-2.00	614.80

CL 159TH ST

Location	Station	Offset	Theoretical Grade Elevations
W. End of E. Approach	344 + 90.29	0.00	615.25
A3	345 + 00.29	0.00	615.10
A4	345 + 10.29	0.00	614.95
E. End of E. Approach	345 + 20.29	0.00	614.78

EB PGL AND STAGE CONSTRUCTION LINE

Location	Station	Offset	Theoretical Grade Elevations
W. End of E. Approach	2344 + 90.29	2.00	615.23
A3	2345 + 00.29	2.00	615.08
A4	2345 + 10.29	2.00	614.93
E. End of E. Approach	2345 + 20.29	2.00	614.76

SOUTH EDGE OF ROADWAY

Location	Station	Offset	Theoretical Grade Elevations
W. End of E. Approach	2344 + 90.29	38.00	614.63
A3	2345 + 00.29	38.00	614.48
A4	2345 + 10.29	38.00	614.33
E. End of E. Approach	2345 + 20.29	38.00	614.16

SOUTH EDGE OF SHOULDER

Location	Station	Offset	Theoretical Grade Elevations
W. End of E. Approach	2344 + 90.29	40.00	614.59
A3	2345 + 00.29	40.00	614.44
A4	2345 + 10.29	40.00	614.29
E. End of E. Approach	2345 + 20.29	40.00	614.12

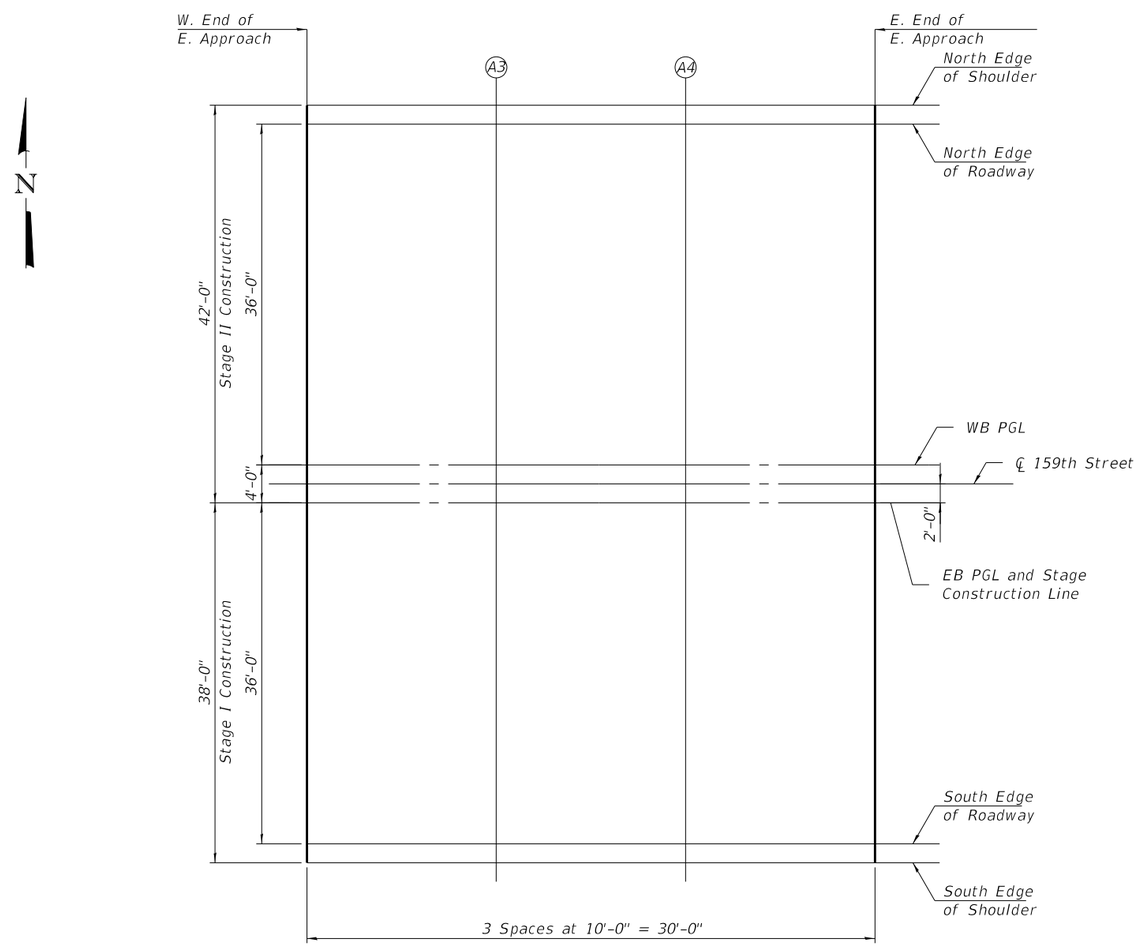

PLAN

Notes:
1. Offsets are measured with respect to the Centerline.
2. Negative offsets are left of the centerline while looking upstation.
3. All Elevations and Offsets are in feet.

MODEL: Default
FILE NAME: pw:\\wsp-us-pw.bentley.com:wsp-us-pw-ILLDocuments\Project IDOT 2050082201 - IDOT District 1 VariousStructures\Work Order 1\016-0388 - 159th over I-94\Sheets\11_016-0388 - Top of East Approach Slab Elevations.dgn

3/11/2025 12:46:07 PM

USER NAME =	DESIGNED - BJD	REVISED -	
	CHECKED - MGH	REVISED -	
PLOT SCALE =	DRAWN - GM	REVISED -	
PLOT DATE =	CHECKED - BJD	REVISED -	

STATE OF ILLINOIS
DEPARTMENT OF TRANSPORTATION

TOP OF EAST APPROACH SLAB ELEVATIONS
STRUCTURE NO. 016-0388

SHEET S10-11 OF S10-37 SHEETS

FAP RTE.	SECTION	COUNTY	TOTAL SHEETS	SHEET NO.
581	(42-B-11-1) BR, BJR 24	COOK	761	709

CONTRACT NO. 62W87

ILLINOIS | FED. AID PROJECT

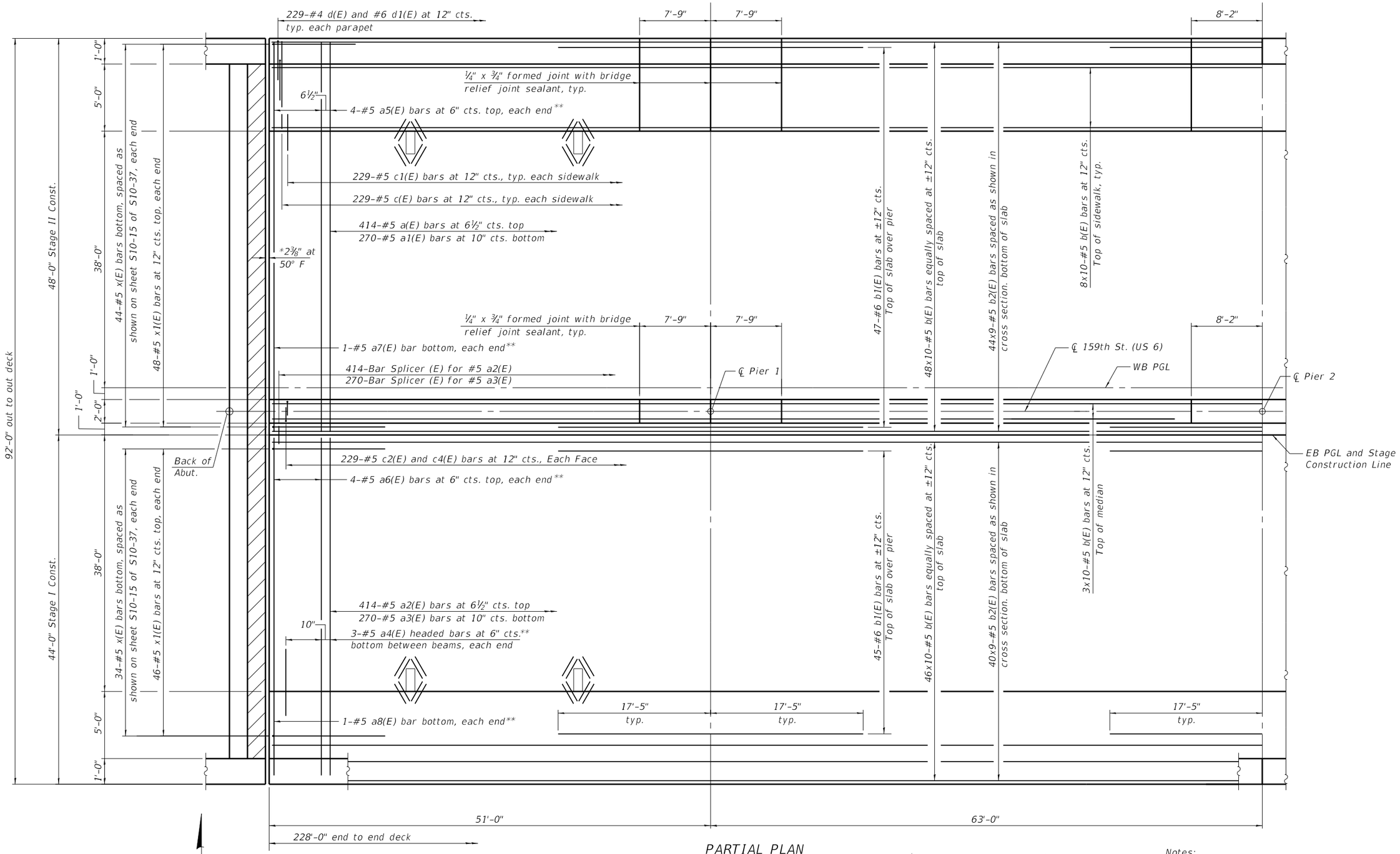

PARTIAL PLAN

(Symmetry about ℄ Pier 2)

MINIMUM BAR LAP

#5 bar = 3'-6"

*Dimension showing concrete opening. For joint opening see sheet S10-20 and S10-21 of S10-37.

**See S10-15 of S10-37 for edge beam details.

Notes:

See sheet S10-14 of S10-37 for superstructure details and Bill of Material.

Bars indicated thus 95x10-#5 etc. indicates 95 lines of bars with 10 lengths per line.

Cut longitudinal reinforcement to clear drainage scuppers.

USER NAME =	DESIGNED - BJD	REVISED -	STATE OF ILLINOIS DEPARTMENT OF TRANSPORTATION
	CHECKED - MGH	REVISED -	
PLOT SCALE =	DRAWN - GM	REVISED -	
PLOT DATE =	CHECKED - BJD	REVISED -	

SUPERSTRUCTURE - 1
STRUCTURE NO. 016-0388
SHEET S10-12 OF S10-37 SHEETS

FAP RTE.	SECTION	COUNTY	TOTAL SHEETS	SHEET NO.
581	(42-B-11-1) BR, BJR 24	COOK	761	710

CONTRACT NO. 62W87

ILLINOIS | FED. AID PROJECT

MODEL: Default
FILE NAME: pw:\\wsp-us-pw.bentley.com:wsp-us-pw-IL\Documents\Project IDOT 2050082201 - IDOT District 1 Various\Structures\Work Order 1\016-0388 - 159th over I-94\Sheets\12_016-0388 - Superstructure-1.dgn

3/11/2025 12:46:11 PM

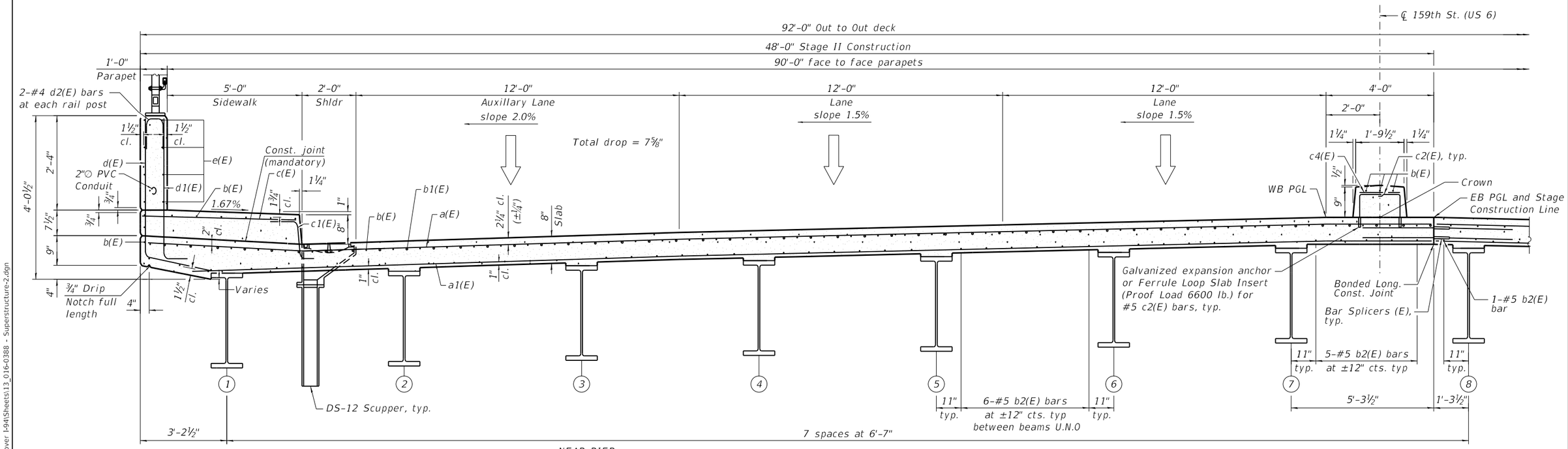

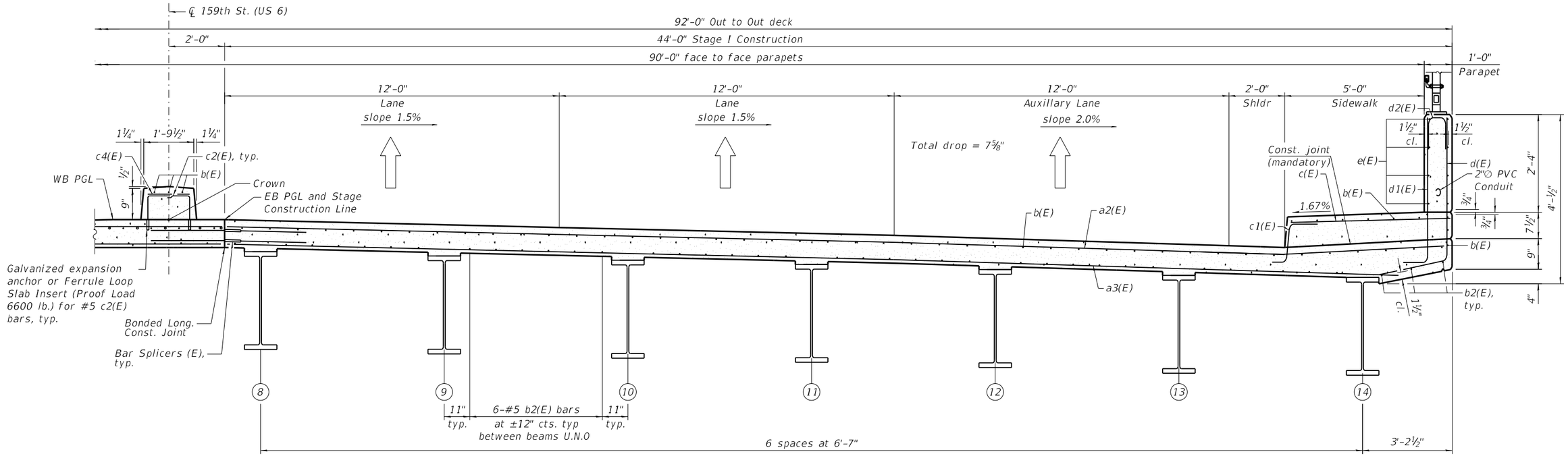

wsp	USER NAME =	DESIGNED - BJD	REVISED -	STATE OF ILLINOIS DEPARTMENT OF TRANSPORTATION	SUPERSTRUCTURE - 2 STRUCTURE NO. 016-0388	FAP RTE.	SECTION	COUNTY	TOTAL SHEETS / SHEET NO.
		CHECKED - MGH	REVISED -			581	(42-B-11-1) BR, BJR 24	COOK	761 / 711
	PLOT SCALE =	DRAWN - GM	REVISED -					CONTRACT NO. 62W87	
	PLOT DATE =	CHECKED - BJD	REVISED -		SHEET S10-13 OF S10-37 SHEETS		ILLINOIS	FED. AID PROJECT	

MODEL: Default
FILE NAME: pw:\\wsp-us-pw.bentley.com:wsp-us-pw-IL\Documents\Project IDOT 2050082201 - IDOT District 1 Various\Structures\Work Order 11016-0388 - 159th over I-94\Sheets\13_016-0388 - Superstructure-2.dgn

3/11/2025 12:46:15 PM

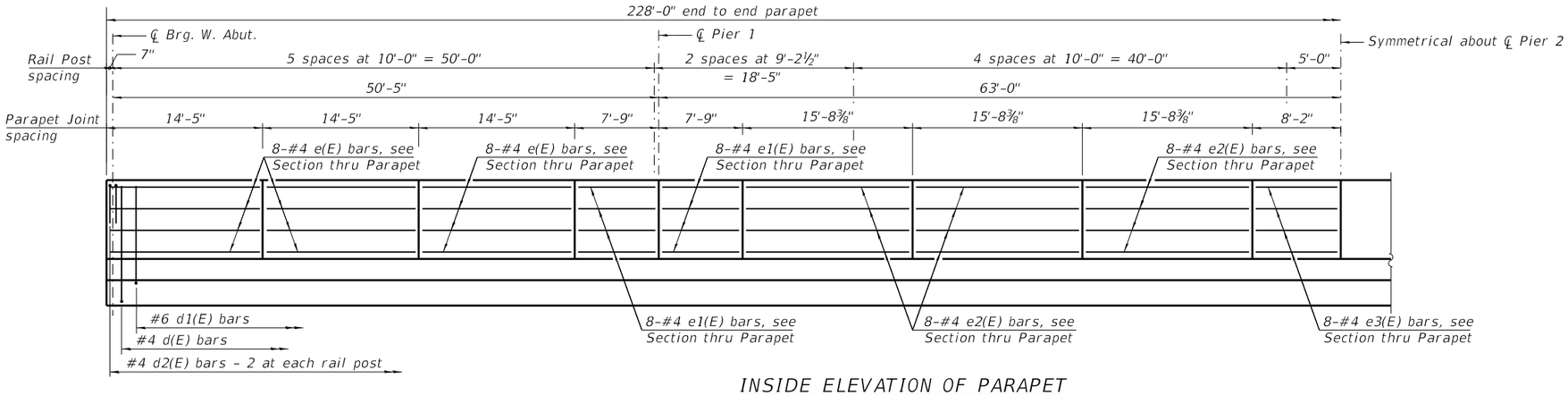

INSIDE ELEVATION OF PARAPET

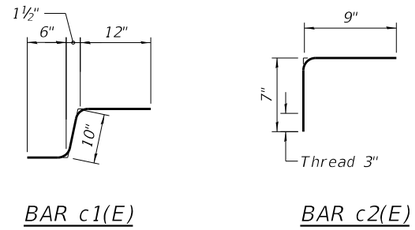

BAR c1(E)

BAR c2(E)

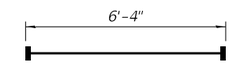

HEADED BAR a4(E)

(Headed 78-#5 a4(E) Bar terminators)

MINIMUM BAR LAP

#4 bar = 2'-5"

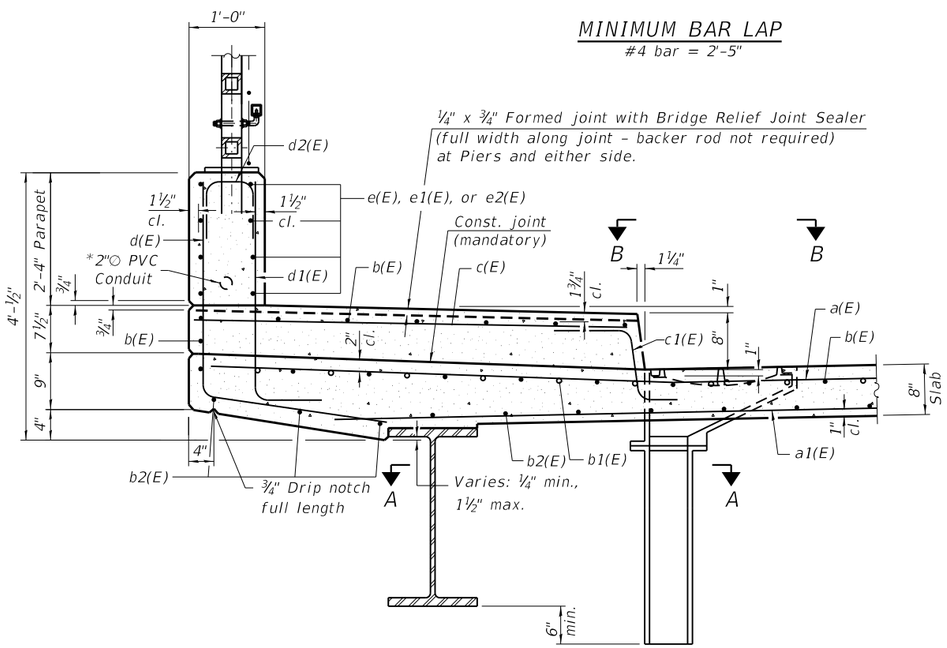

SECTION THRU SIDEWALK

* For Conduit and junction boxes, see Rdwy Plan.
See IDOT Highway Standard 812001. Maintain 1½" cl. from reinforcement to conduit.

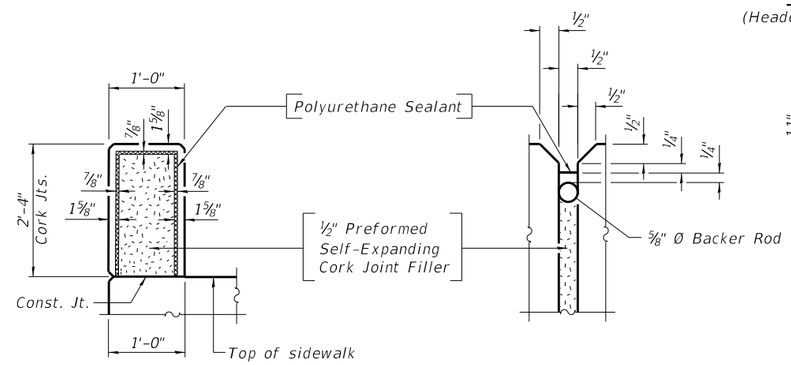

PARAPET JOINT DETAILS

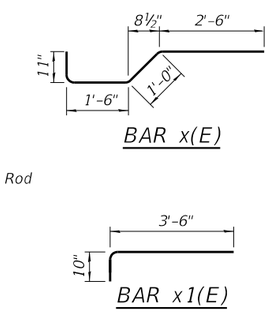

BAR x(E)

BAR x1(E)

Notes:
The Polyurethane Sealant shall be according to Article 1050.04 of the Std. Spec. and the color shall be gray.
Cut longitudinal reinforcement to clear drainage scuppers.
Bar Terminators paid for Separately. See Total Bill of Material.

SUPERSTRUCTURE BILL OF MATERIAL

Bar	No.	Size	Length	Shape
a(E)	414	#5	47'-8"	
a1(E)	270	#5	46'-0"	
a2(E)	414	#5	43'-8"	
a3(E)	270	#5	42'-0"	
a4(E)	78	#5	6'-4"	
a5(E)	8	#5	47'-8"	
a6(E)	8	#5	43'-8"	
a7(E)	2	#5	46'-0"	
a8(E)	2	#5	42'-0"	
a9(E)	64	#5	2'-0"	
b(E)	1130	#5	26'-0"	
b1(E)	276	#6	34'-10"	
b2(E)	756	#5	28'-6"	
c(E)	458	#5	5'-8"	
c1(E)	458	#5	2'-4"	
c2(E)	458	#5	1'-4"	
c4(E)	229	#5	1'-6"	
d(E)	458	#4	5'-7"	
d1(E)	458	#6	4'-5"	
d2(E)	96	#4	2'-8"	
e(E)	96	#4	14'-9"	
e1(E)	64	#4	7'-5"	
e2(E)	96	#4	15'-4"	
e3(E)	32	#4	7-10"	
x(E)	156	#5	5'-11"	
x1(E)	188	#5	4'-4"	
Reinforcement Bars, Epoxy Coated			Lbs.	147,340
Concrete Superstructure			Cu. Yds.	923.6

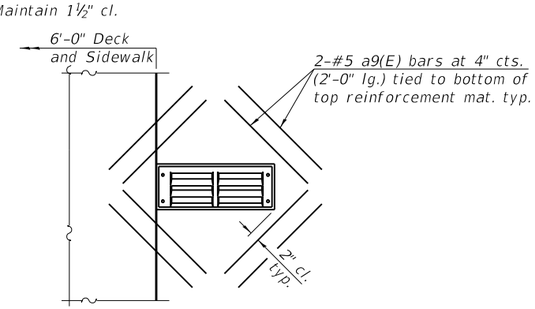

SECTION B-B

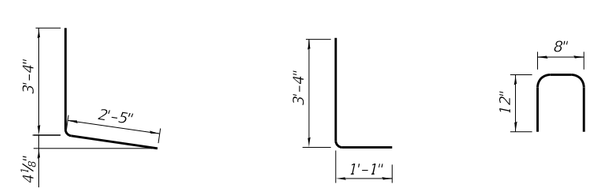

BAR d(E)

BAR d1(E)

BAR d2(E)

MODEL: Default
FILE NAME: pw:\\wsp-us-pw.bentley.com:wsp-us-pw-ILL\Documents\Project IDOT 2050082201 - IDOT Distrkt 1 Various\Structures\Work Order 1\016-0388 - 159th over I-94\Sheets\14_016-0388_Superstructure Details.dgn

3/11/2025 12:46:19 PM

USER NAME =	DESIGNED - BJD	REVISED -	
	CHECKED - MGH	REVISED -	
PLOT SCALE =	DRAWN - GM	REVISED -	
PLOT DATE =	CHECKED - BJD	REVISED -	

STATE OF ILLINOIS
DEPARTMENT OF TRANSPORTATION

SUPERSTRUCTURE DETAILS
STRUCTURE NO. 016-0388

SHEET S10-14 OF S10-37 SHEETS

FAP RTE.	SECTION	COUNTY	TOTAL SHEETS	SHEET NO.
581	(42-B-11-1) BR, BJR 24	COOK	761	712
		CONTRACT NO. 62W87		
		ILLINOIS	FED. AID PROJECT	

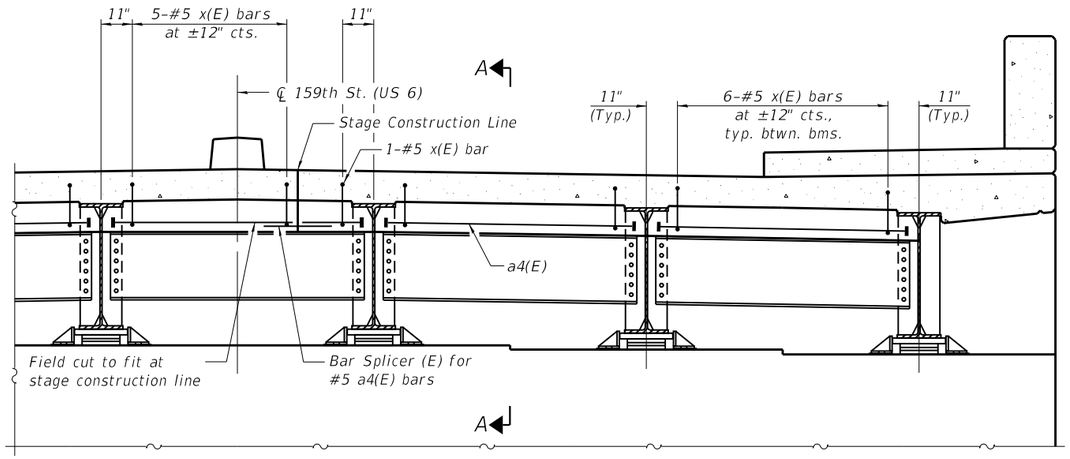

DIAPHRAGM AT ABUTMENT

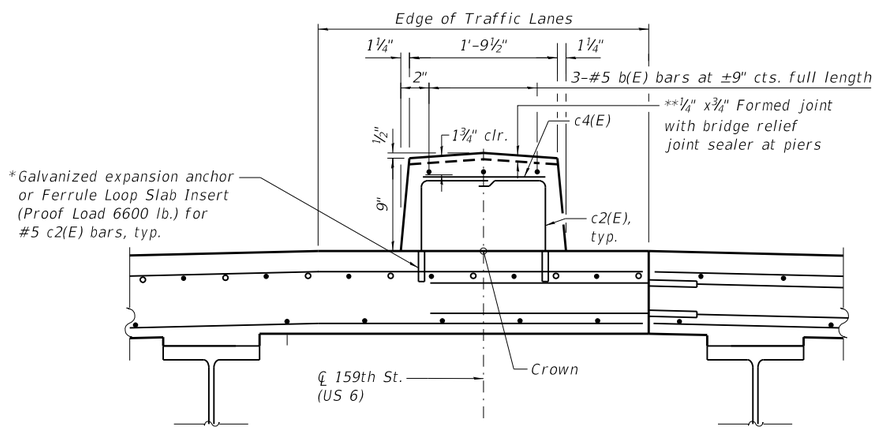

SECTION THRU MEDIAN

* The cost of expansion anchors/inserts is included in the cost of Reinforcement Bars, Epoxy Coated.

** Full width along joint - backer rod not required.

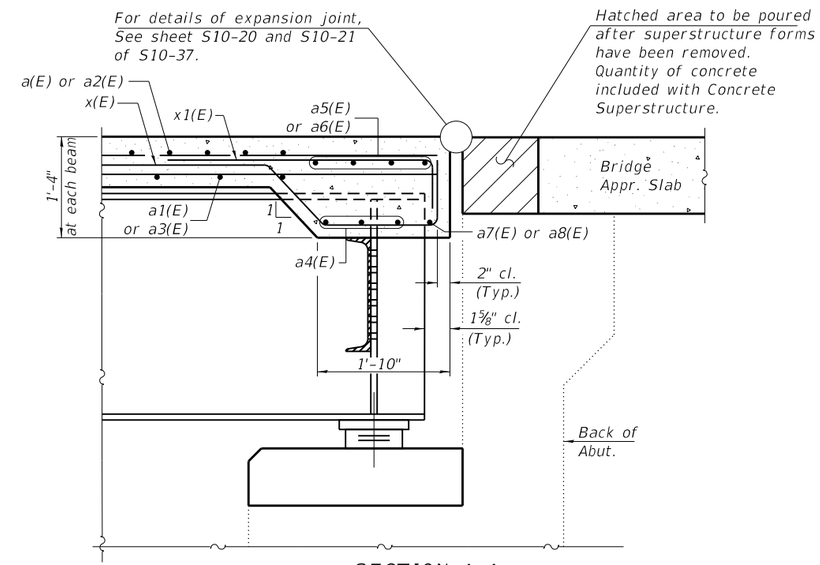

SECTION A-A

Notes:
See sheet S10-14 of S10-37 for superstructure details and Bill of Material.
Reinforcement bars designated (E) shall be epoxy coated.

wsp	USER NAME =	DESIGNED - BJD	REVISED -
		CHECKED - MGH	REVISED -
	PLOT SCALE =	DRAWN - GM	REVISED -
	PLOT DATE =	CHECKED - BJD	REVISED -

STATE OF ILLINOIS
DEPARTMENT OF TRANSPORTATION

SUPERSTRUCTURE DETAILS
STRUCTURE NO. 016-0388

SHEET S10-15 OF S10-37 SHEETS

FAP RTE.	SECTION	COUNTY	TOTAL SHEETS	SHEET NO.
581	(42-B-11-1) BR, BJR 24	COOK	761	713
		CONTRACT NO. 62W87		
	ILLINOIS	FED. AID PROJECT		

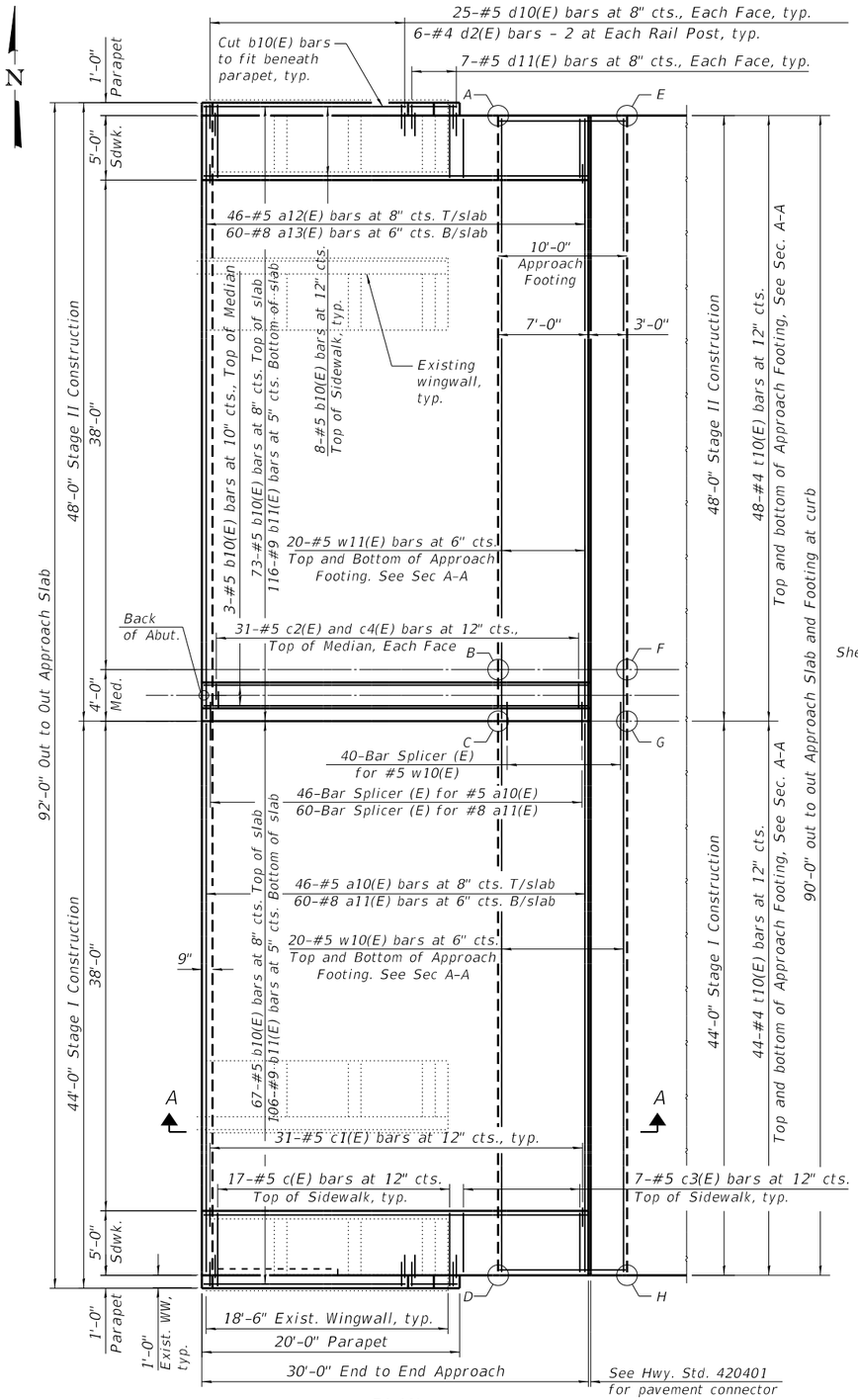

PLAN

(East Approach Slab shown; West Approach Slab similar by opposite hand)

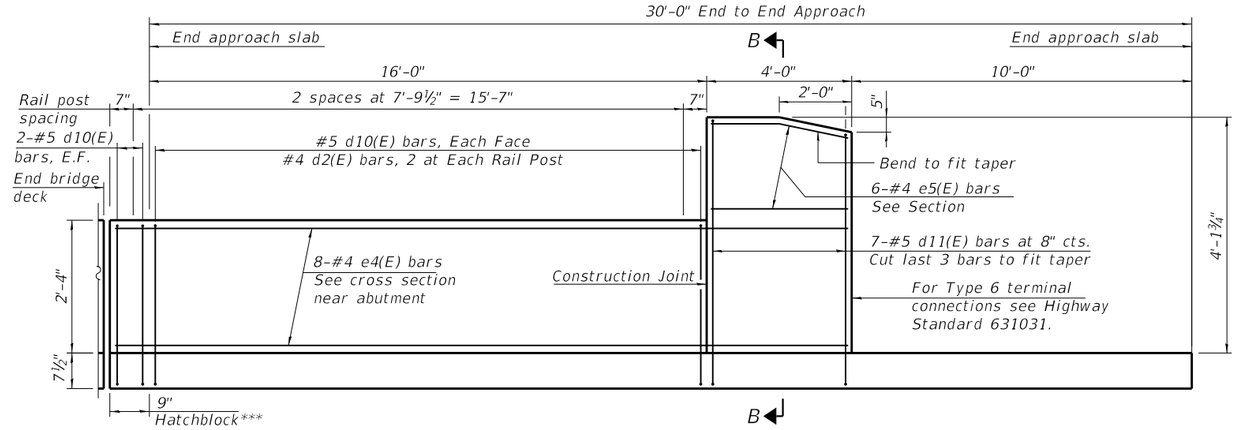

INSIDE ELEVATION OF PARAPET AND SIDEWALK

*** See sheet S10-17 for layout of b12(E), c(E), c1(E), and d10(E) bars in the parapet and sidewalk over the hatchblock.

Notes:
See sheet S10-17 for notes.

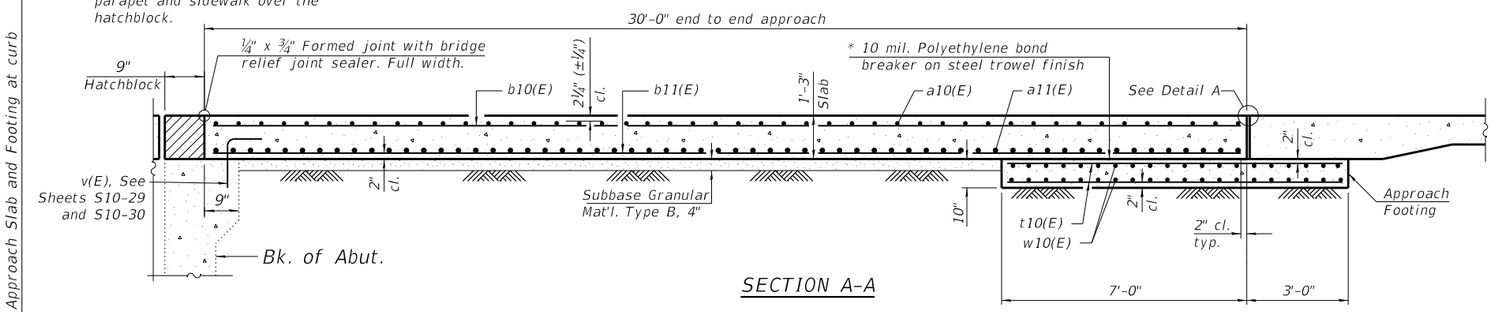

SECTION A-A

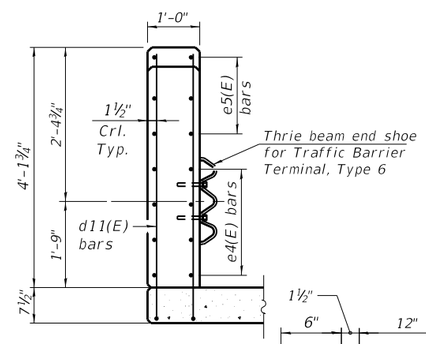

SECTION B-B

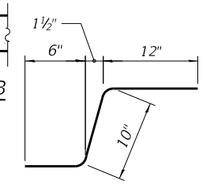

BAR c1(E)

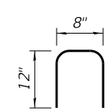

BAR d2(E)

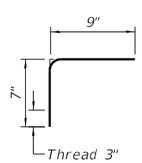

BAR c2(E)

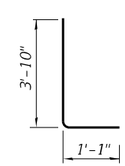

BAR d10(E)

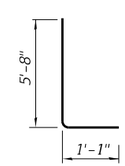

BAR d11(E)

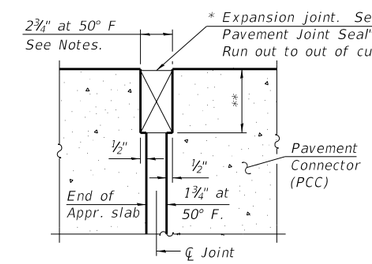

DETAIL A

* Cost included with Concrete Superstructure (Approach Slab).
** Per manufacturer recommendations

TOP AND BOTTOM ELEVATIONS FOR APPROACH FOOTING

West Approach			East Approach		
Point	Top	Bottom	Point	Top	Bottom
A-SE	612.79	611.95	A-NW	612.93	612.09
B-E SL	613.53	612.69	B-W PGL	613.67	612.83
C-E PGL	613.46	612.63	C-W SL	613.63	612.80
D-NE	612.72	611.89	D-SW	612.89	612.06
E-SW	612.61	611.77	E-NE	612.76	612.92
F-W SL	613.35	612.51	F-E PGL	613.50	612.66
G-W PGL	613.28	612.45	G-E SL	613.46	612.63
H-NW	612.54	611.71	H-SE	612.72	611.89

TWO APPROACHES BILL OF MATERIAL

Bar	No.	Size	Length	Shape
a10(E)	92	#5	43'-8"	
a11(E)	120	#8	43'-8"	
a12(E)	92	#5	47'-8"	
a13(E)	120	#8	47'-8"	
b10(E)	318	#5	29'-8"	
b11(E)	444	#9	29'-8"	
b12(E)	32	#5	30'-5"	
c(E)	92	#5	5'-8"	
c1(E)	132	#5	2-4"	
c2(E)	124	#5	1'-4"	
c3(E)	52	#5	4'-8"	
c4(E)	31	#5	1'-6"	
d2(E)	24	#4	2'-8"	
d10(E)	200	#5	4'-11"	
d11(E)	56	#5	6'-9"	
e4(E)	32	#4	20'-5"	
e5(E)	24	#4	3'-8"	
t10(E)	368	#4	9'-8"	
w10(E)	80	#5	43'-8"	
w11(E)	80	#5	47'-8"	
Concrete Superstructure			Cu. Yd.	29.0
Concrete Superstructure (Approach Slab)			Cu. Yd.	253.8
Concrete Structures			Cu. Yd.	55.6
Reinforcement Bars, Epoxy Coated			Pound	214,090

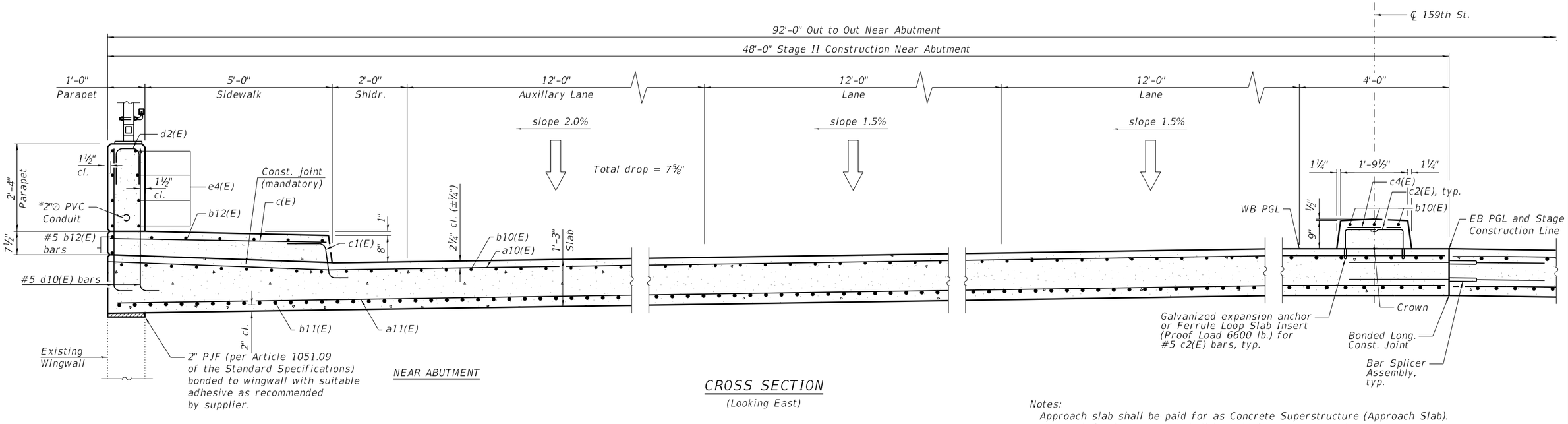

CROSS SECTION

(Looking East)

* For Conduit and junction boxes, see Rdwy Plans. See IDOT Highway Standard 812001. Maintain 1½" cl. from reinforcement to conduit.

Notes:

Approach slab shall be paid for as Concrete Superstructure (Approach Slab).
Approach footing concrete shall be paid for as Concrete Structures.
The approach footing maximum applied service bearing pressure (Qmax) = 2.0 ksf.
Cost of excavation for approach footing included with Concrete Structures.
See sheet S10-30A of S10-37 for hatched block details.

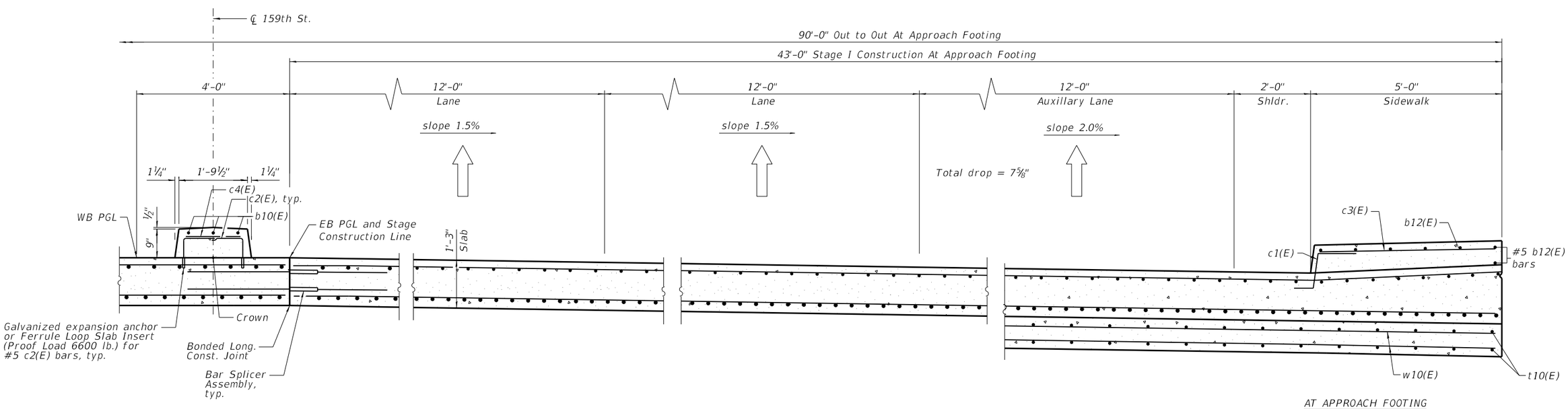

CROSS SECTION

(Looking East)

wsp	USER NAME =	DESIGNED - BJD	REVISED -
		CHECKED - MGH	REVISED -
	PLOT SCALE =	DRAWN - GM	REVISED -
	PLOT DATE =	CHECKED - BJD	REVISED -

STATE OF ILLINOIS
DEPARTMENT OF TRANSPORTATION

BRIDGE APPROACH SLAB DETAILS - 2
STRUCTURE NO. 016-0388

SHEET S10-17 OF S10-37 SHEETS

FAP RTE.	SECTION	COUNTY	TOTAL SHEETS	SHEET NO.
581	(42-B-11-1) BR, BJR 24	COOK	761	715
		CONTRACT NO. 62W87		
		ILLINOIS	FED. AID PROJECT	

MODEL: Default
FILE NAME: pw:\\wsp-us-pw.bentley.com:wsp-us-pw-IL\Documents\Project IDOT 2050082201 - IDOT District 1 Various\Structures\Work Order 1\016-0388 - 159th over I-94\Sheets\17_016-0388_Approach-Slab-Replacement-2.dgn

3/11/2025 12:46:31 PM

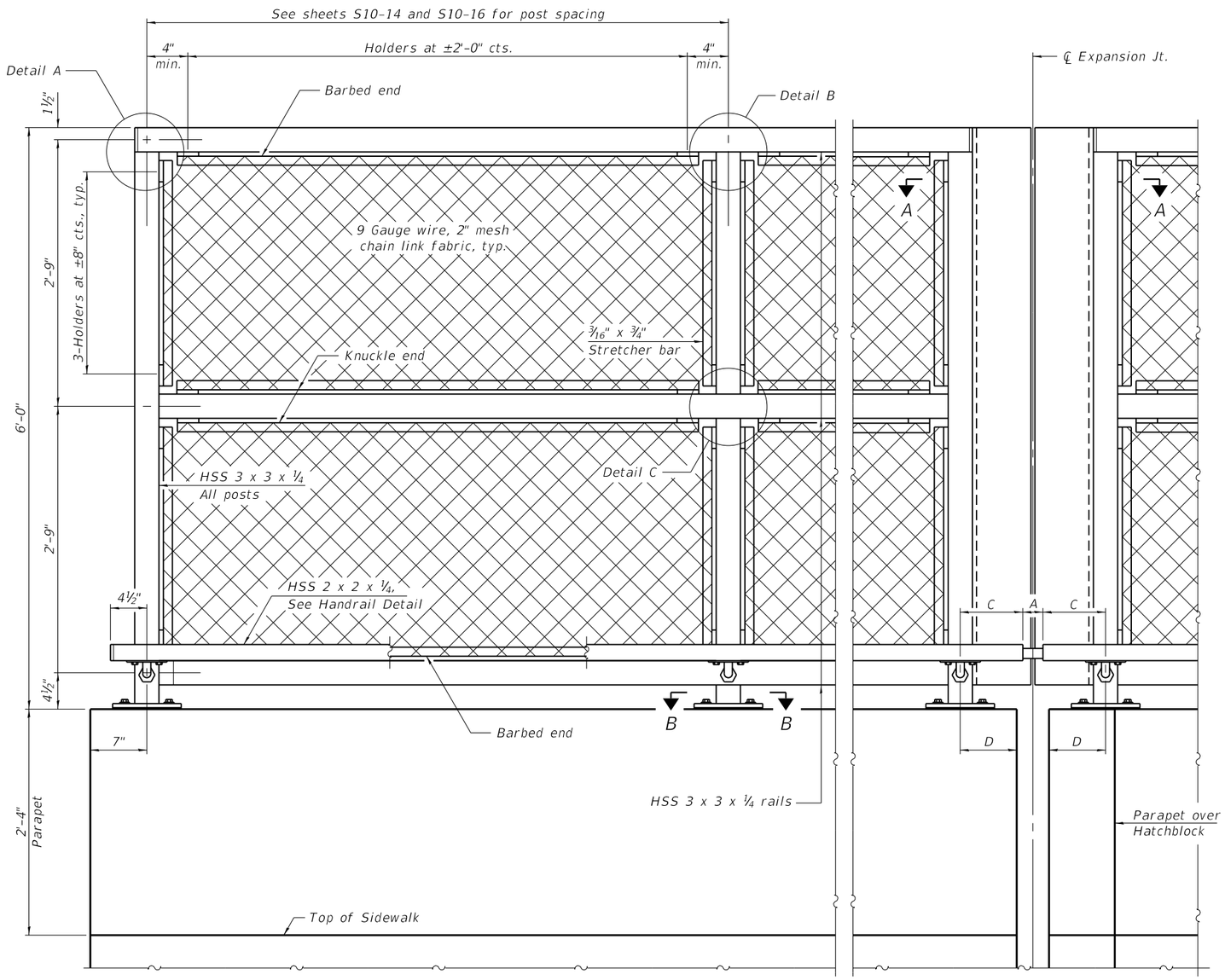

ELEVATION BRIDGE FENCE RAILING

(Inside face)

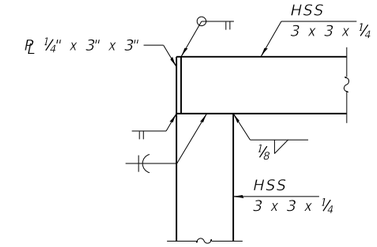

DETAIL A

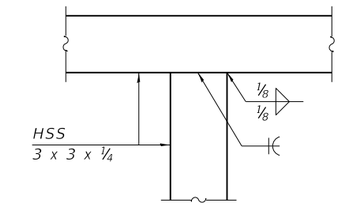

DETAIL B

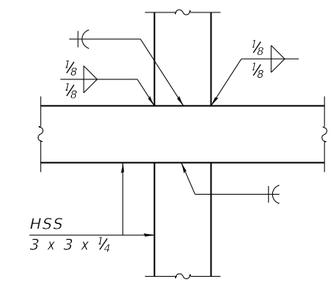

DETAIL C

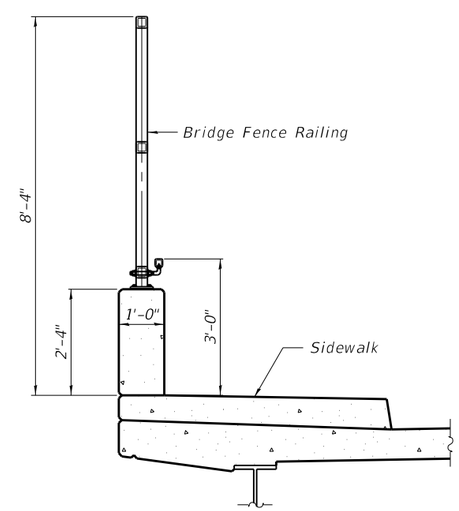

SECTION THRU DECK

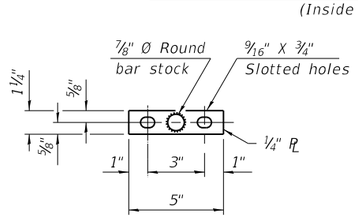

VIEW C-C

(Handrail)

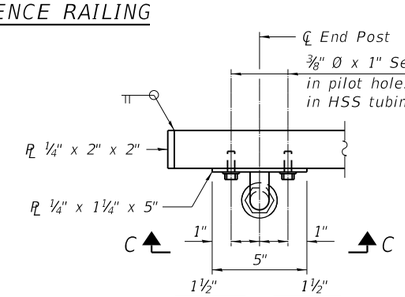

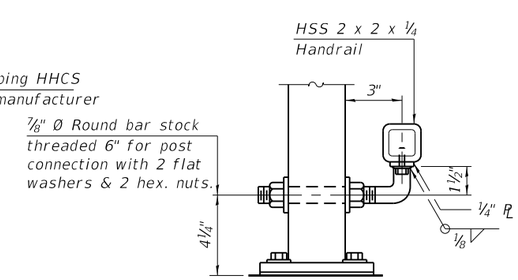

HANDRAIL DETAIL

RAILING CRITERIA

NCHRP 350 Test Level	4
Max Post Spacing	10'-0"
Railing Weight (plf)	50

(Sheet 1 of 2)

USER NAME =	DESIGNED - BJD	REVISED -	STATE OF ILLINOIS DEPARTMENT OF TRANSPORTATION
	CHECKED - MGH	REVISED -	
PLOT SCALE =	DRAWN - GM	REVISED -	
PLOT DATE =	CHECKED - BJD	REVISED -	

BRIDGE FENCE RAILING
STRUCTURE NO. 016-0388

SHEET S10-18 OF S10-37 SHEETS

FAP RTE.	SECTION	COUNTY	TOTAL SHEETS	SHEET NO.
581	(42-B-11-1) BR, BJR 24	COOK	761	716

CONTRACT NO. 62W87

ILLINOIS FED. AID PROJECT

MODEL: Default
FILE NAME: pw:\\wsp-us-pw.bentley.com:wsp-us-pw-ILL\Documents\Project IDOT 2050082201 - IDOT District 1 Various\Structures\Work Order 1\016-0388 - 159th over I-94\Sheets\18_016-0388 -Bridge Fence Railing.dgn

3/11/2025 12:46:35 PM

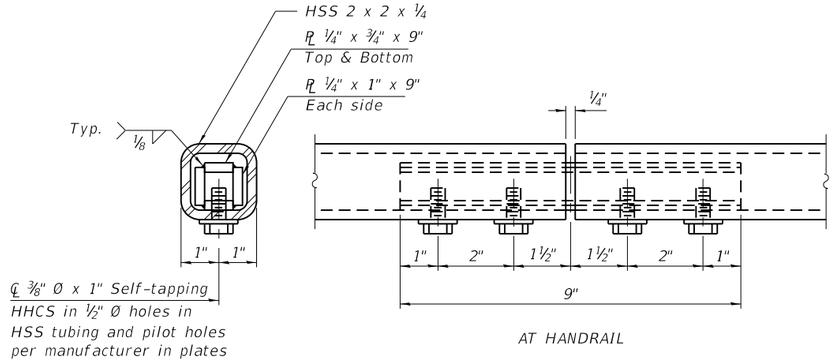

AT HANDRAIL

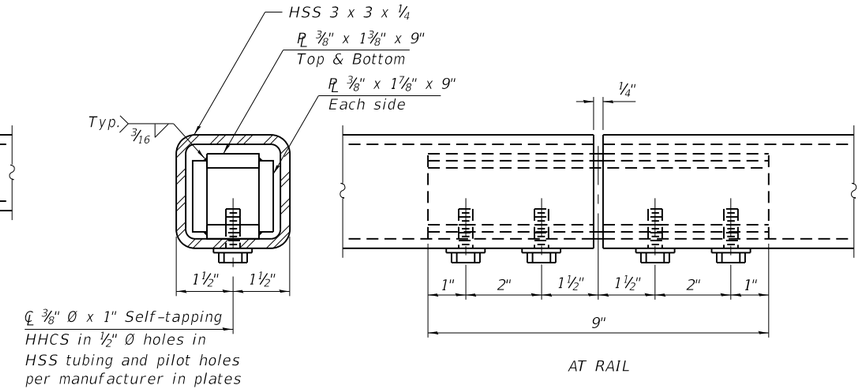

AT RAIL

MATERIAL SPLICE

Notes:

Place reinforcement bars to miss anchor rod locations.

CVN testing is not required for the HSS tubing used in the Bridge Fence Railing.

All HSS tubing used for the Handrail shall be CVN tested according to Article 1006.34(b) of the Standard Specifications.

All heavy hex nuts shall be according to ASTM A 563 grade DH.

All fully threaded anchor rods shall be ASTM F1554 grade 105.

The post base plate shall be fastened to the curb snug tight and given an additional ⅛" turn.

Rail splice inserts may be built out of bent plates of the same thicknesses and outside geometry limits as the 4 plate rail splice inserts shown.

When the contract specifies a galvanized railing, all steel rail elements shall be galvanized according to Article 509.05 of the Standard Specifications. When the contract specifies a painted railing, all posts, rail, splices, anchor devices and plates of the railing shall be painted according to the paint system for railings as specified in the General Notes.

See sheet S10-12 of S10-37 for dimensions of concrete openings at expansion joints.

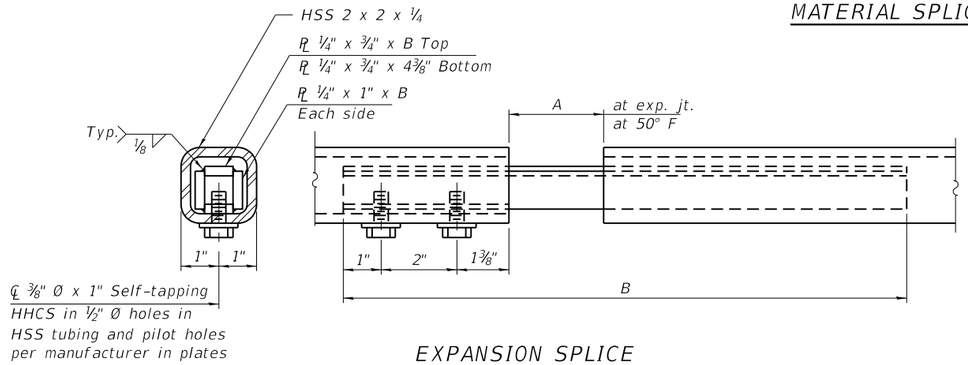

EXPANSION SPLICE

(Weld bottom plate on bolt side)

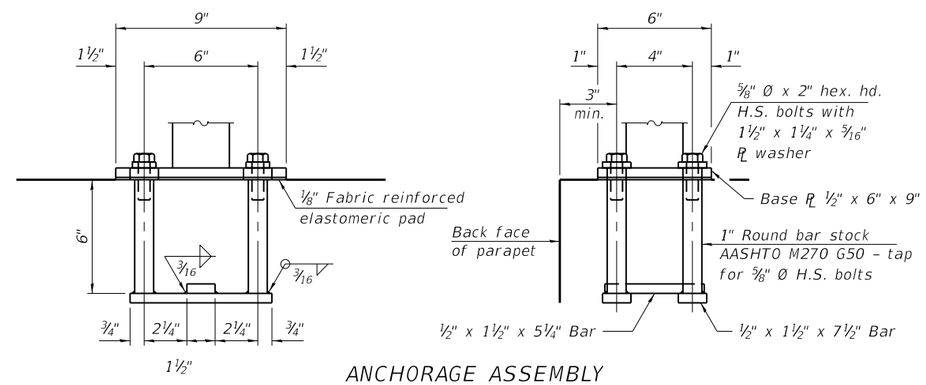

ANCHORAGE ASSEMBLY

The Bridge Fence Railing fasteners for end posts near expansion joints may need to be installed prior to installing the bent plates.

In lieu of the cast-in-place anchor device shown, the Contractor has the option of drilling and setting ⅝" Ø fully threaded anchor rods with the same plate washers as specified above and heavy hex lock nuts according to Article 509.06 of the Standard Specifications. Embedment shall be according to the manufacturer's specifications.

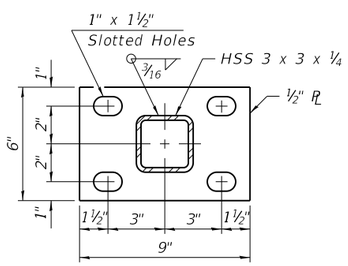

SECTION B-B

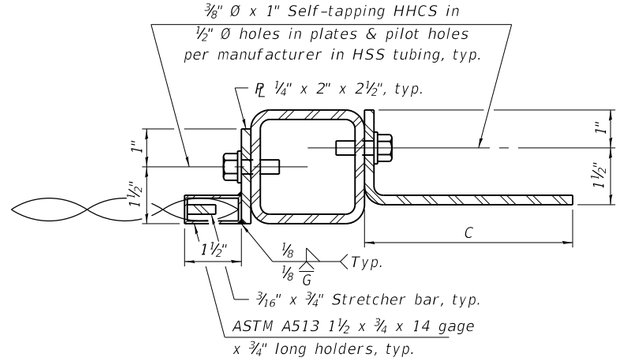

SECTION A-A

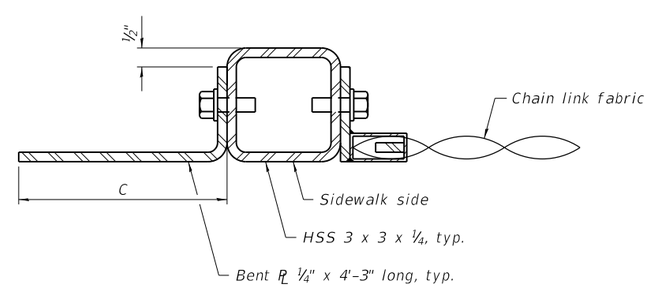

TABLE OF DIMENSIONS

Location	T	A	B	C	D
Over Strip Seal Jt.	≤4"	2½"	1'-5⅞"	7¼"	7"

T= ; total movement based on total temperature range from -20°F to 120°F along centerline of roadway at expansion joint.

BILL OF MATERIAL

Item	Unit	Quantity
Bridge Fence Railing	Foot	524

(Sheet 2 of 2)

USER NAME =	DESIGNED - BJD	REVISED -	STATE OF ILLINOIS DEPARTMENT OF TRANSPORTATION
	CHECKED - MGH	REVISED -	
PLOT SCALE =	DRAWN - GM	REVISED -	
PLOT DATE =	CHECKED - BJD	REVISED -	

BRIDGE FENCE RAILING
STRUCTURE NO. 016-0388

SHEET S10-19 OF S10-37 SHEETS

FAP RTE.	SECTION	COUNTY	TOTAL SHEETS	SHEET NO.
581	(42-B-11-1) BR, BJR 24	COOK	761	717

CONTRACT NO. 62W87

ILLINOIS FED. AID PROJECT

MODEL: Default
FILE NAME: pw:\\wsp-us-pw.bentley.com:wsp-us-pw-IL\Documents\Project IDOT 2050082201 - IDOT District 1 Various\Structures\Work Order 1\016-0388 - 159th over I-94\Sheets\19_016-0388 -Bridge Fence Railing.dgn

3/11/2025 12:46:39 PM

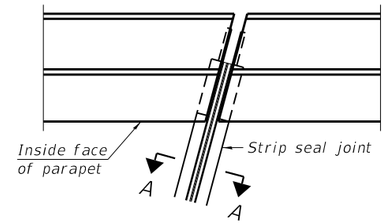

FOR SKEWS ≤ 30°

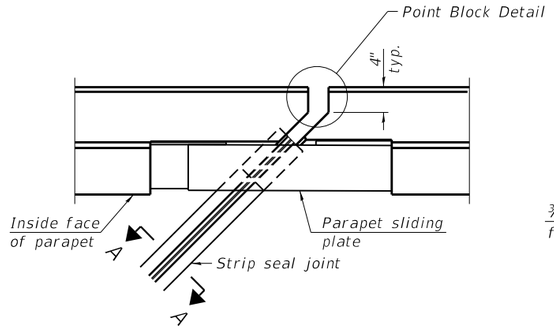

FOR SKEWS > 30°

PLAN AT PARAPET

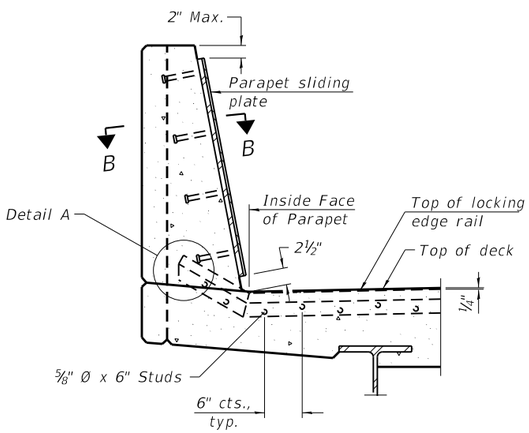

SECTION AT PARAPET

(Skews > 30° shown. Skews ≤ 30° similar except as shown in plan view.)

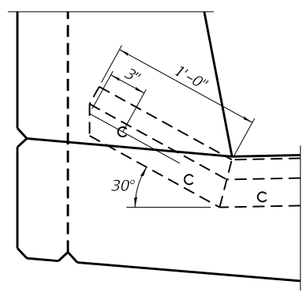

DETAIL A

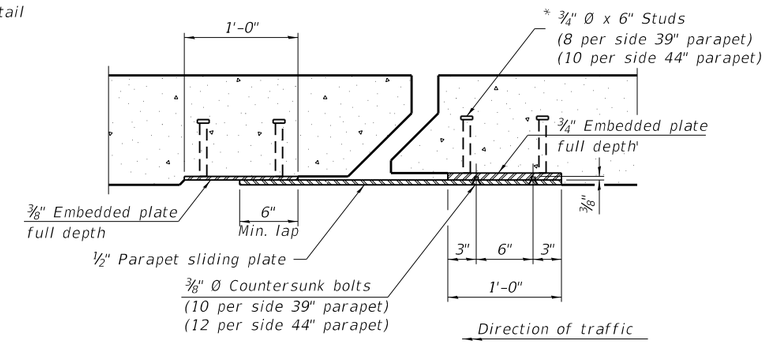

SECTION B-B

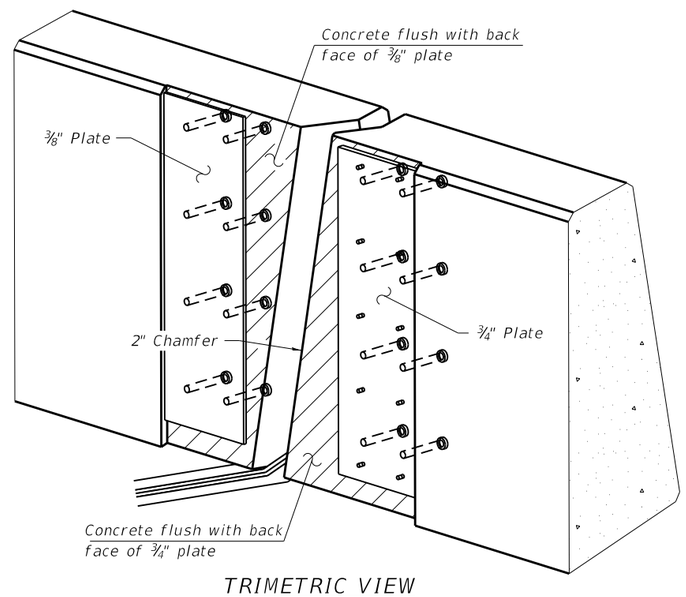

TRIMETRIC VIEW

(Showing embedded plates only)

Notes:

The strip seal shall be made continuous and shall have a minimum thickness of ¼". The configuration of the strip seal shall match the configuration of the locking edge rails. Open or "webbed" strip seal gland configurations are not permitted. The gland shall be sized for a maximum rated movement of 4 inches.

The locking edge rails depicted are configured for typical applications and are conceptual only. The actual configuration of the locking edge rails and matching strip seal may vary from manufacturer to manufacturer provided they fit the application and meet the minimum anchorage shown. Flanged edge rails, however, will not be allowed. Locking edge rails may exceed the 4½" maximum depth provided the anchorage system is revised according to the manufacturer's recommendation.

The manufacturer's recommended installation methods shall be followed.

All steel components shall be galvanized after fabrication according to Article 520.03 of the Standard Specifications.

The Maximum space between locking edge rail segments shall be 3/16" and sealed with a suitable sealant; however, any rail joint within 10' measured perpendicular to the face of the curb or parapet shall be welded as shown in the locking edge rail splice detail.

The top surface of sidewalk sliding plates shall have a raised pattern according to ASTM A786.

Cost of parapet sliding plates, embedded plates, and anchorage studs included with Preformed Joint Strip Seal.

39" constant slope barrier shown, 44" constant slope barrier similar as noted.

The concrete opening below the strip seal will vary based on the locking edge rail chosen by the Contractor. Deck and parapet lengths shown elsewhere in the plans are dimensioned to the concrete opening, not the joint opening, and are based on the rolled locking edge rail. If the Contractor elects to use a different locking edge rail, dimensional adjustments may be required. One exception to this would be the strip seal joint at the end of the precast bridge approach slab. For these cases the pavement connector length shall be adjusted, not the length of the bridge approach slab.

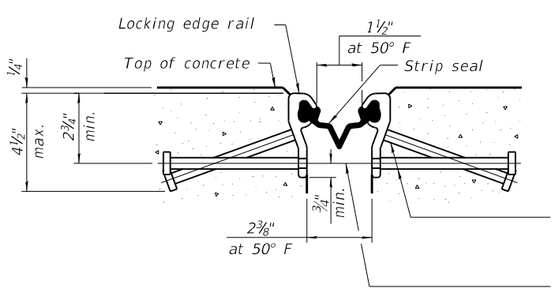

SHOWING ROLLED RAIL JOINT

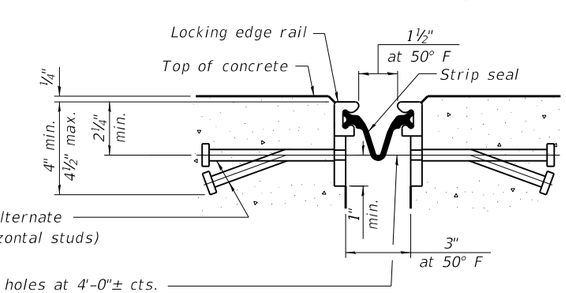

SHOWING WELDED RAIL JOINT

* ⅝" Ø x 6" studs @ 6" cts. (alternate angled/bent studs with horizontal studs)

⅜" Ø threaded rods in 7/16" Ø holes at 4'-0"± cts. for holding the proper joint opening based on the temperature during the deck pour. Place to miss studs. All rods shall be burned, or sawed off flush with the plates after concrete is set.

SECTION A-A

* Granular or solid flux filled headed studs conforming to Article 1006.32 of the Std. Specs., automatically end welded.

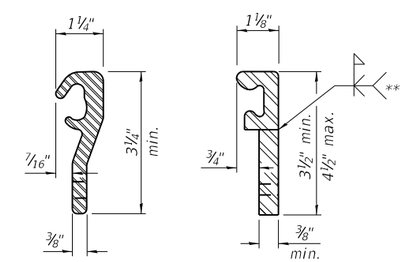

ROLLED (EXTRUDED) RAIL

WELDED RAIL

LOCKING EDGE RAILS

** Back gouge not required if complete joint penetration is verified by mock-up.

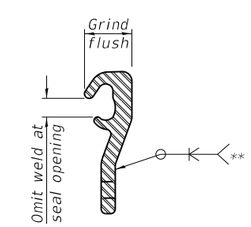

LOCKING EDGE RAIL SPLICE

The inside of the locking edge rail groove shall be free of weld residue. Rolled rail shown, welded rail similar.

BILL OF MATERIAL

Item	Unit	Total
Preformed Joint Strip Seal	Foot	184

EJ-SS-S 5-15-2023

wsp	USER NAME =	DESIGNED - BJD	REVISED -
		CHECKED - MGH	REVISED -
	PLOT SCALE =	DRAWN - GM	REVISED -
	PLOT DATE =	CHECKED - BJD	REVISED -

STATE OF ILLINOIS
DEPARTMENT OF TRANSPORTATION

PREFORMED JOINT STRIP SEAL
STRUCTURE NO. 016-0388

SHEET S10-20 OF S10-37 SHEETS

FAP RTE.	SECTION	COUNTY	TOTAL SHEETS	SHEET NO.
581	(42-B-11-1) BR, BJR 24	COOK	761	718

CONTRACT NO. 62W87

ILLINOIS FED. AID PROJECT

MODEL: Default
FILE NAME: pw:\\wsp-us-pw.bentley.com:wsp-us-pw-1\Documents\Project IDOT 2050082201 - IDOT District 1 Various\Structures\Work Order 1\016-0388 - 159th over I-94\Sheets\20_016-0388-PreformedStripSeal.dgn

1/23/2025 11:45:40 AM

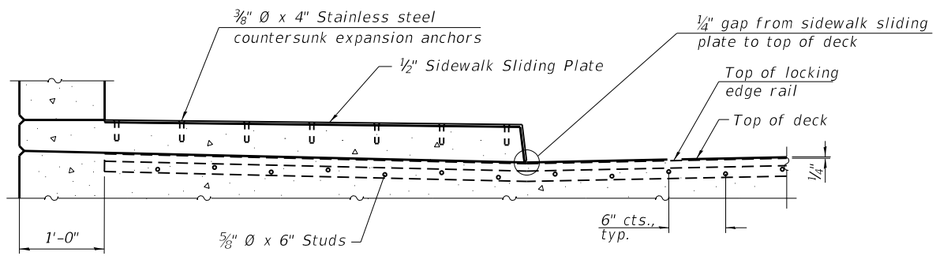

SECTION AT RAISED SIDEWALK

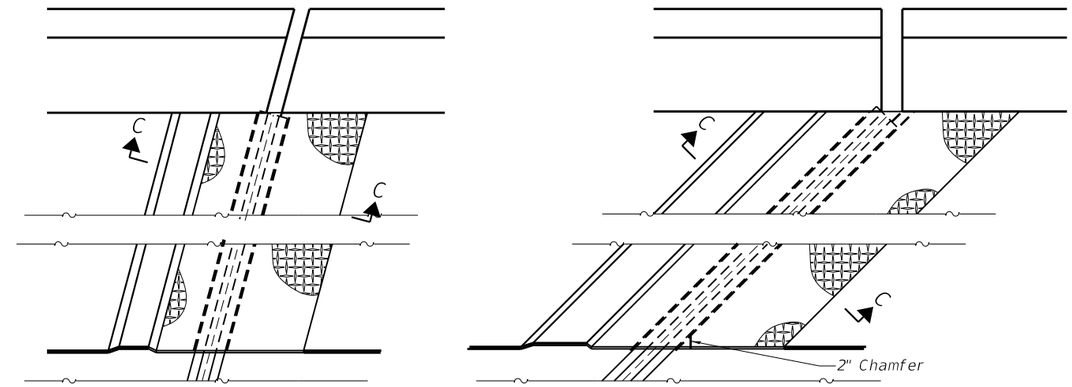

(FOR SKEWS ≤ 30°)

(FOR SKEWS > 30°)

PLAN AT RAISED SIDEWALK

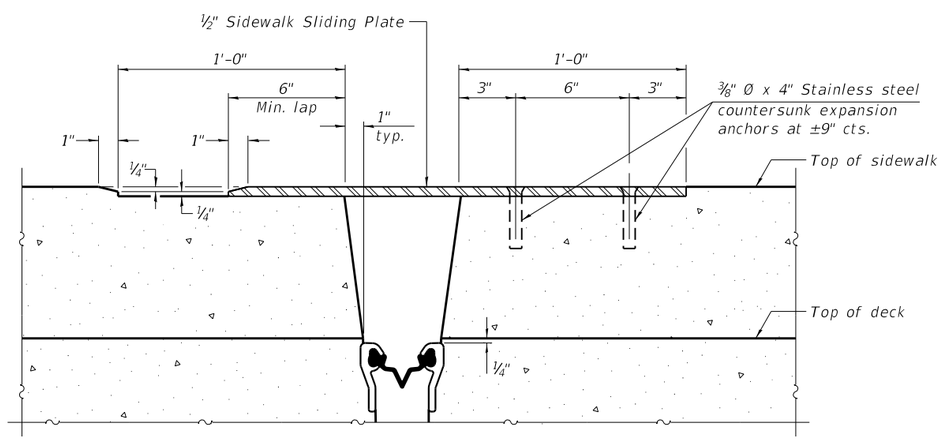

SECTION C-C

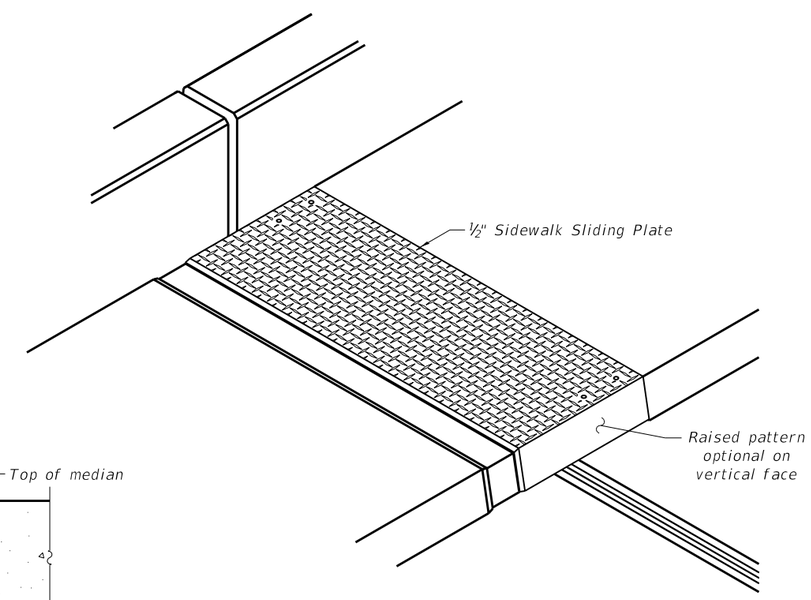

TRIMETRIC VIEW

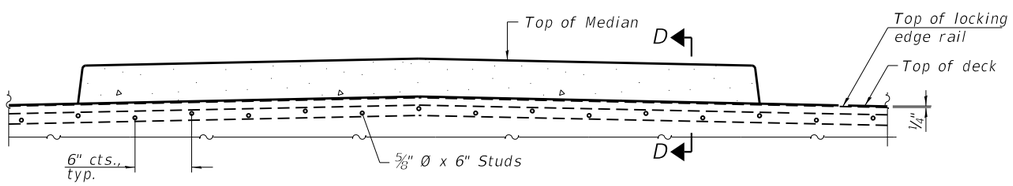

SECTION AT MEDIAN

For skews > 30°, chamfer acute corners 2" similar to sidewalk.

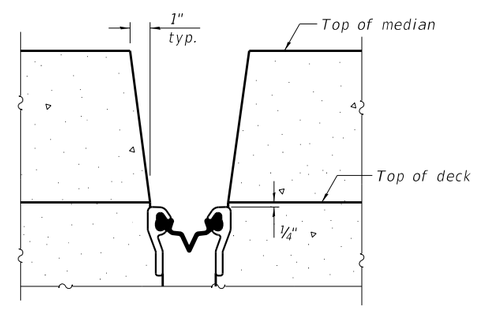

SECTION D-D

(at Rt. ∠'s)

EJ-SS-S 5/15/2023

USER NAME =	DESIGNED - BJD	REVISED -	STATE OF ILLINOIS DEPARTMENT OF TRANSPORTATION
	CHECKED - MGH	REVISED -	
PLOT SCALE =	DRAWN - GM	REVISED -	
PLOT DATE =	CHECKED - BJD	REVISED -	

PREFORMED JOINT STRIP SEAL - SIDEWALK
STRUCTURE NO. 016-0388

SHEET S10-21 OF S10-37 SHEETS

FAP RTE.	SECTION	COUNTY	TOTAL SHEETS	SHEET NO.
581	(42-B-11-1) BR, BJR 24	COOK	761	719
		CONTRACT NO. 62W87		
	ILLINOIS	FED. AID PROJECT		

MODEL: Default
FILE NAME: pw:\\wsp-us-pw.bentley.com:wsp-us-pw-ILIDocuments\Project IDOT 2050082201 - IDOT District 1 VariousStructures\Work Order 1\016-0388 - 159th over I-94\Sheets\21_016-0388-PreformedStripSeal2.dgn

1/23/2025 11:45:44 AM

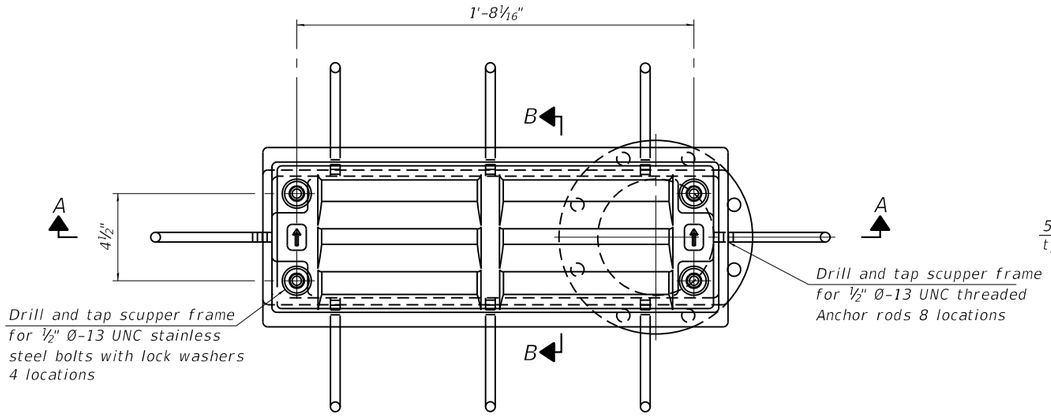

PLAN

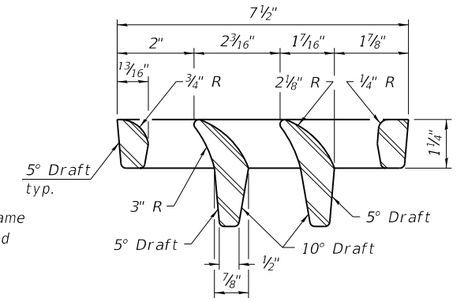

VANE GRATE DETAIL

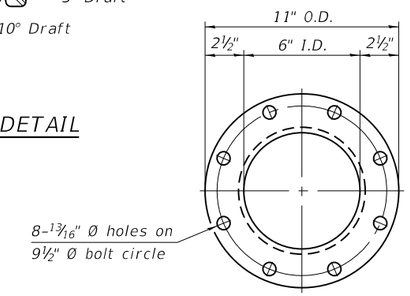

Notes:

All cast iron parts shall be gray iron conforming to the requirements of AASHTO M105, Class 35B and AASHTO M306.

Bolts, anchor rods, nuts and washers shall be according to ASTM A307 and shall be galvanized according to AASHTO M232. As an alternate stainless steel may be used.

Stainless steel hardware shall be according to Article 1006.29(d) of the Standard Specifications.

Structural steel weldments of equal sections and of the same configuration may be substituted for the cast iron scupper frames and downspouts; however, the scupper grates shall remain cast iron. Fillet or full penetration welds shall be used for the weldments. Details shall be submitted to the Engineer for approval.

Structural steel scupper frames and downspouts, when utilized, shall be galvanized according to AASHTO M111.

As an alternate, fiberglass may be used for downspouts according to ASTM D2996 with a short-time rupture strength hoop tensile stress of 30,000 psi min. in lieu of the cast iron or structural steel.

Exterior surfaces of downspouts and exterior exposed surfaces of the scupper frame below deck shall be pigmented or painted to match the color of the adjacent beam.

The Contractor shall take appropriate measures to assure that Protective Coat is not applied to the scupper.

Cost of the grate, frame, downspout, anchor rods, nuts and washers including complete installation of the scupper shall be paid for at the contract unit price for Drainage Scuppers, DS-12.

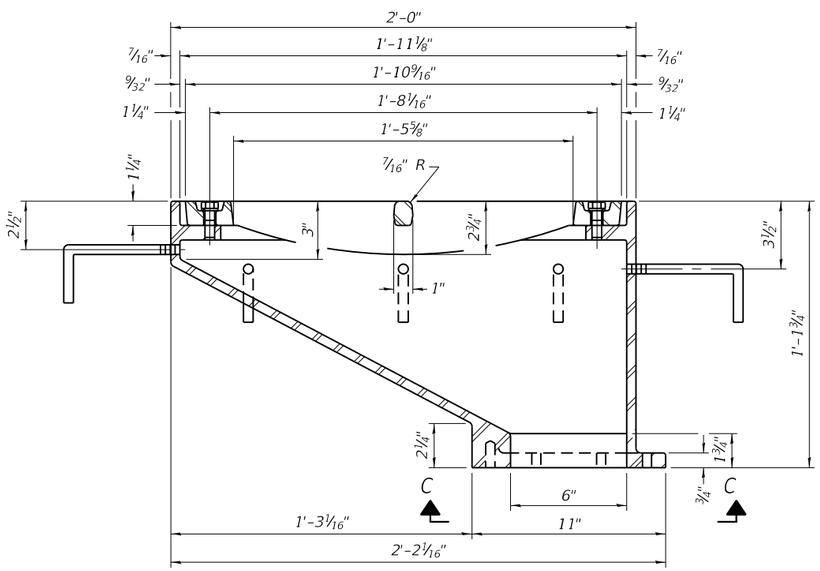

SECTION A-A

See sheet S10-14 of S10-37 for scupper location relative to the curb.

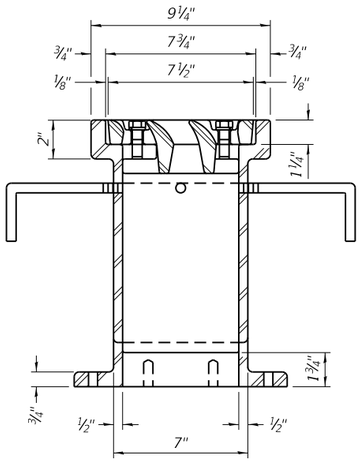

SECTION B-B

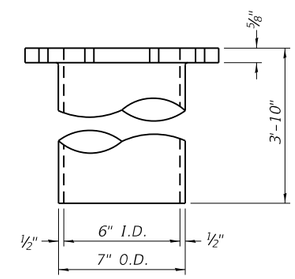

DOWNSPOUT

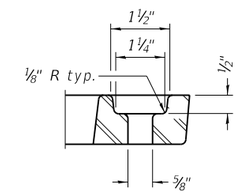

GRATE BOLT HOLE DETAIL

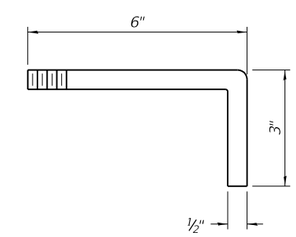

ANCHOR ROD DETAIL

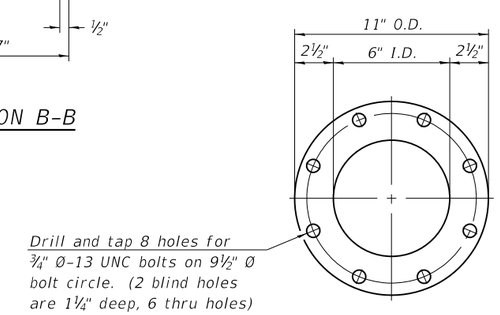

VIEW C-C

BILL OF MATERIAL

ITEM	UNIT	QUANTITY
Drainage Scuppers, DS-12	Each	8

DS-12 5-15-2023

USER NAME =	DESIGNED - BJD	REVISED -	STATE OF ILLINOIS DEPARTMENT OF TRANSPORTATION
	CHECKED - MGH	REVISED -	
PLOT SCALE =	DRAWN - GM	REVISED -	
PLOT DATE =	CHECKED - BJD	REVISED -	

DRAINAGE SCUPPER DETAILS
STRUCTURE NO. 016-0388

SHEET S10-22 OF S10-37 SHEETS

FAP RTE.	SECTION	COUNTY	TOTAL SHEETS	SHEET NO.
581	(42-B-11-1) BR, BJR 24	COOK	761	720
		CONTRACT NO. 62W87		
	ILLINOIS	FED. AID PROJECT		

MODEL: Default
FILE NAME: pw:\\wsp-us-pw.bentley.com:wsp-us-pw-IL\Documents\Project IDOT 2050082201 - IDOT District 1 Various\Structures\Work Order 1\016-0388 - 159th over I-94\Sheets\22_016-0388 -Drainage Scupper Details.dgn

1/23/2025 11:45:48 AM

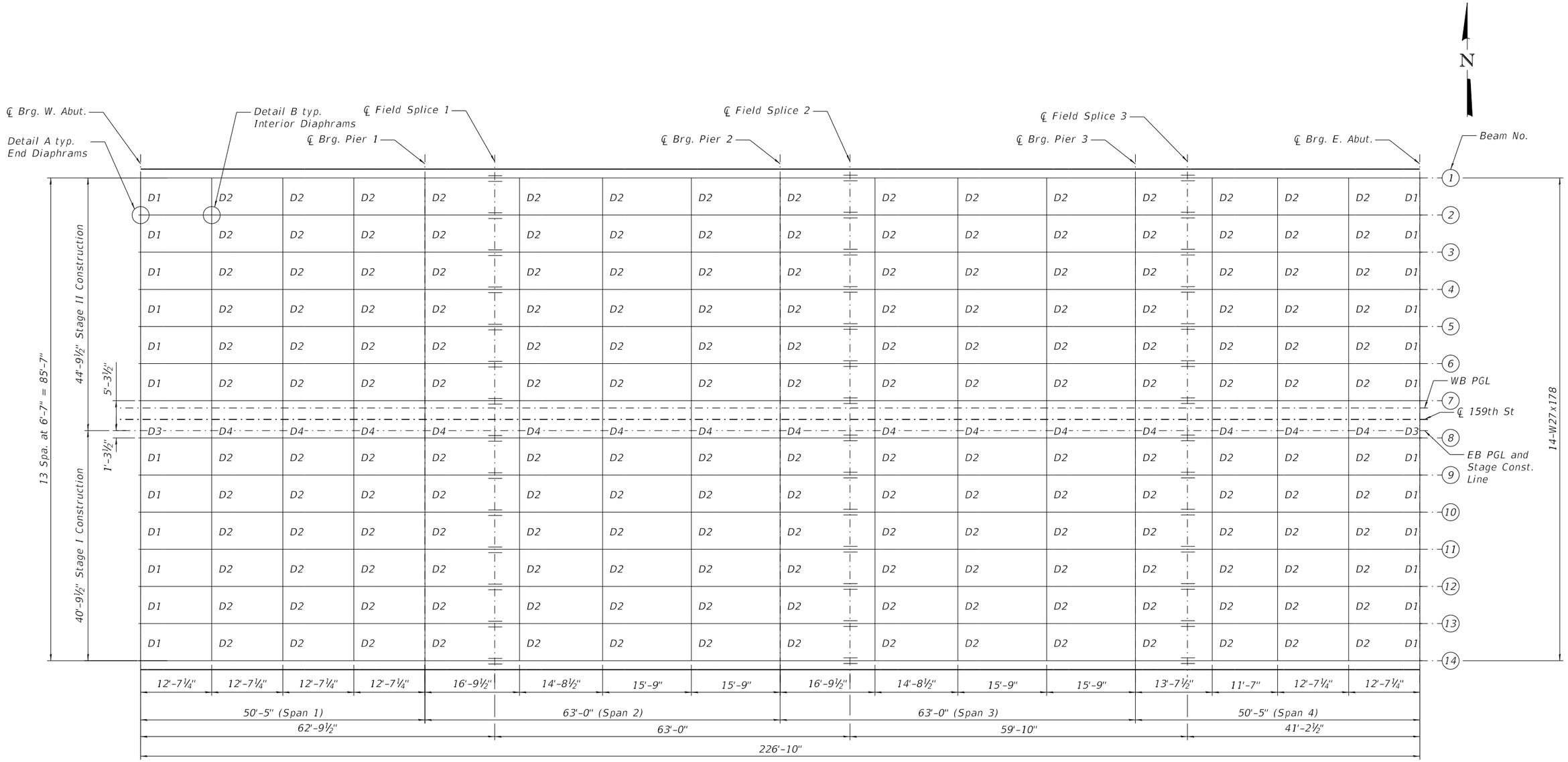

FRAMING PLAN

TOP OF BEAM ELEVATIONS

(For fabrication only)

	Beam 1	Beam 2	Beam 3	Beam 4	Beam 5	Beam 6	Beam 7	Beam 8	Beam 9	Beam 10	Beam 11	Beam 12	Beam 13	Beam 14
℄ Brg. W. Abut.	613.65	613.78	613.91	614.03	614.13	614.22	614.32	614.26	614.16	614.04	613.96	613.85	613.71	613.58
℄ Brg. Pier 1	614.22	614.36	614.49	614.60	614.70	614.81	614.90	614.84	614.74	614.64	614.55	614.43	614.30	614.17
℄ Splice 1	614.32	614.45	614.58	614.70	614.80	614.90	614.99	614.94	614.84	614.74	614.64	614.52	614.39	614.26
℄ Brg. Pier 2	614.50	614.63	614.77	614.88	614.98	615.07	615.18	615.13	615.03	614.93	614.83	614.71	614.58	614.45
℄ Splice 2	614.55	614.68	614.82	614.93	615.03	615.12	615.23	615.18	615.08	614.98	614.88	614.76	614.63	614.50
℄ Brg. Pier 3	614.29	614.42	614.55	614.67	614.77	614.87	614.96	614.92	614.82	614.72	614.62	614.51	614.37	614.24
℄ Splice 3	614.22	614.35	614.48	614.60	614.69	614.80	614.89	614.85	614.75	614.65	614.55	614.43	614.30	614.17
℄ Brg. E. Abut.	613.76	613.89	614.02	614.14	614.24	614.34	614.44	614.40	614.30	614.20	614.10	613.98	613.85	613.72

Notes:
All diaphragms shall be installed as steel is erected and secured with erection pins and bolts except as otherwise noted. Individual diaphragms at supports maybe temporarily disconnected to install bearing anchor bolts.

USER NAME =	DESIGNED - BJD	REVISED -
	CHECKED - MGH	REVISED -
PLOT SCALE =	DRAWN - GM	REVISED -
PLOT DATE =	CHECKED - BJD	REVISED -

STATE OF ILLINOIS
DEPARTMENT OF TRANSPORTATION

FRAMING PLAN
STRUCTURE NO. 016-0388

SHEET S10-23 OF S10-37 SHEETS

FAP RTE.	SECTION	COUNTY	TOTAL SHEETS	SHEET NO.
581	(42-B-11-1) BR, BJR 24	COOK	761	721

CONTRACT NO. 62W87

ILLINOIS | FED. AID PROJECT

MODEL: Default
FILE NAME: pw:\\wsp-us-pw.bentley.com:wsp-us-pw-ILI\Documents\Project IDOT 2050082201 - IDOT District 1 Various\Structures\Work Order 1\016-0388 - 159th over I-94\Sheets\23_016-0388 - FramingPlan.dgn

3/11/2025 12:46:57 PM

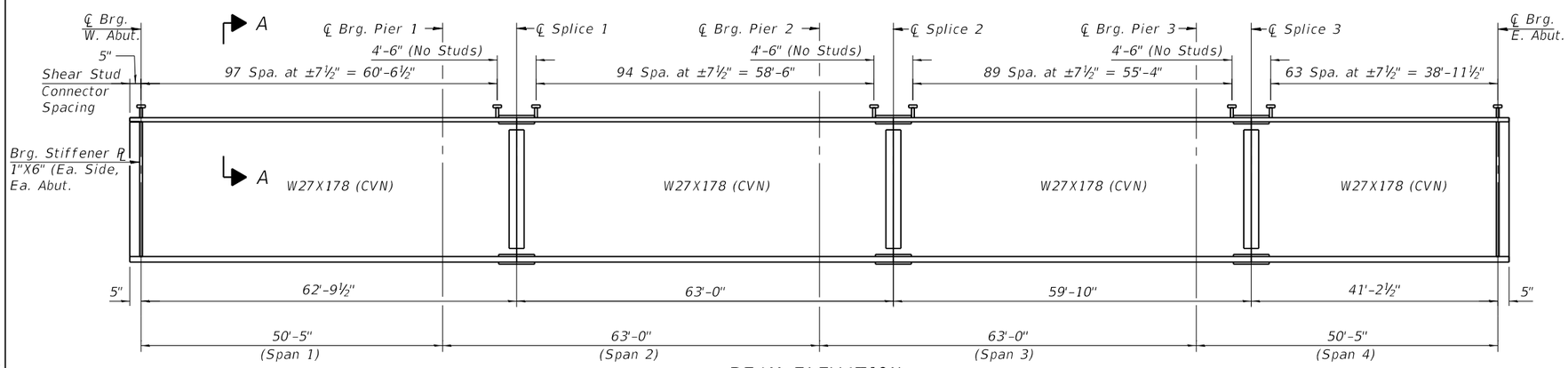

BEAM ELEVATION

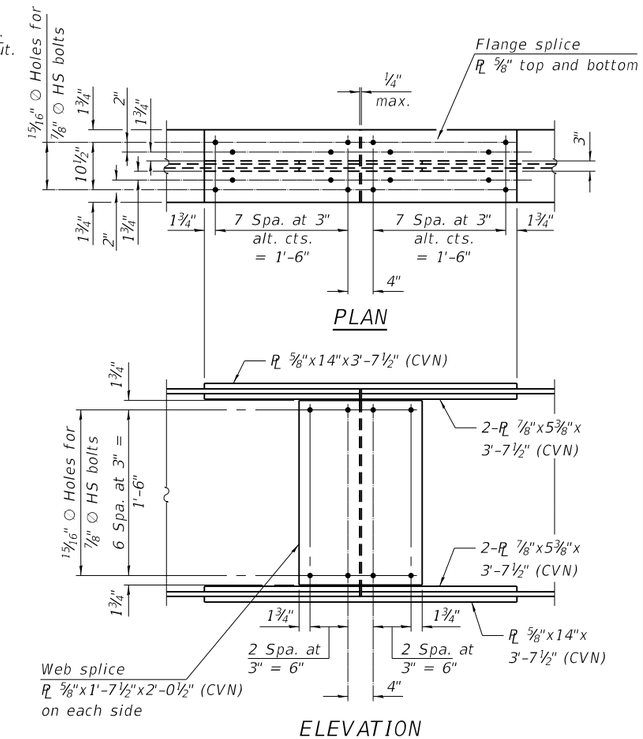

SPLICE DETAIL

(42 Required)

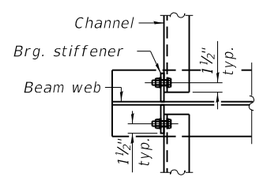

DETAIL A

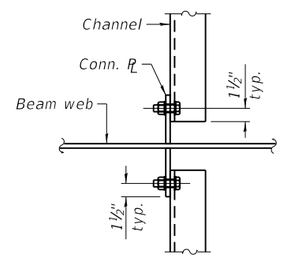

DETAIL B

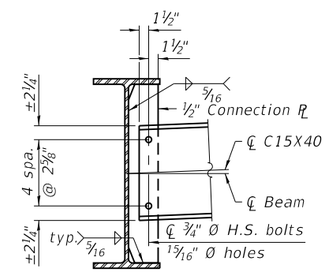

INTERIOR DIAPHRAGM

D2 (180 Required)

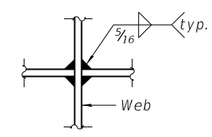

WEB WELD DETAIL

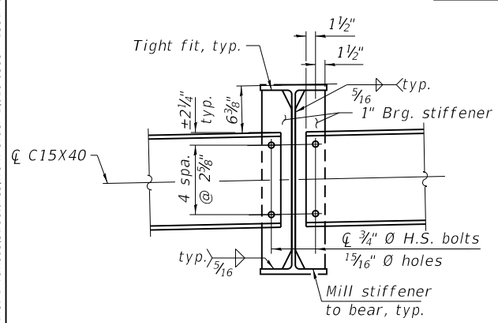

END DIAPHRAGMS

D1 (24 Required)

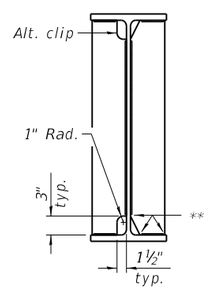

WELD LIMITS AND CLIP DETAILS

** Stop welds ¼" (±⅛") from edges as shown. Typical.

Notes:

Two hardened washers required for each set of oversized holes.

Alternate channels of equal depth and larger weight are permitted to facilitate material acquisition. Alternate channels, if utilized, shall be provided at no additional cost to the Department.

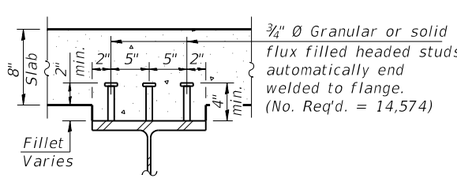

SECTION A-A

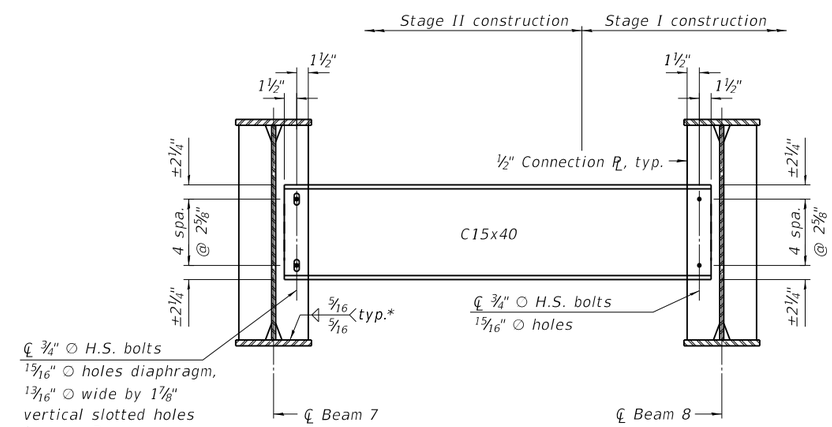

* 3 sides of each stiffener and/or connection PL

INTERIOR DIAPHRAGM AT STAGE CONSTRUCTION LINE

D4 (15 Required)

Bolts in slots shall be finger tight until the second stage pour is complete, and position slots so bolts start at one end with no concrete load and finish near the opposite end under deck load, allowing maximum displacement without laterally stressing main members. Provide 5/16" plate washers for slotted holes.

Notes:

See sheet S10-25 for moment tables and reaction tables.

All beams, splice plates, and bearing stiffeners shall be AASHTO M270 Grade 50.

All diaphragms shall be installed as steel is erected and secured with erection pins and bolts except as otherwise notes.

Individual diaphragms at supports may be temporarily disconnected to install bearing anchor rods.

Load carrying components designated "CVN" shall conform to the Charpy-V-Notch Impact Energy, Zone 2.

All structural steel shall be metalized. Cost included with Furnishing and Erecting Structural Steel.

INTERIOR GIRDER MOMENT TABLE					
		0.4 Sp. 1 or 0.6 Sp. 4	Pier 1 or Pier 3	0.5 Sp. 2 or 0.5 Sp. 3	Pier 2
I_s	(in^4)	7,020	7,020	7,020	7,020
$I_c(n)$	(in^4)	17,796	--	17,796	--
$I_c(3n)$	(in^4)	13,000	--	13,000	--
$I_c(cr)$	(in^4)	--	8,930	--	8,930
S_s	(in^3)	505	505	505	505
$S_c(n)$	(in^3)	715	--	715	--
$S_c(3n)$	(in^3)	647	--	647	--
$S_c(cr)$	(in^3)	--	562	--	562
S_x	(in^3)	505	505	505	505
DC1	(k/')	0.90	0.90	0.90	0.90
M_{DC1}	('k)	159	289	136	298
DC2	(k/')	0.31	0.31	0.31	0.31
M_{DC2}	('k)	54	100	46	104
DW	(k/')	0.29	0.29	0.29	0.29
M_{DW}	('k)	51	94	43	97
LLDF		0.586	0.569	0.553	0.553
M_{LL+IM}	('k)	500	439	472	484
f_l (Strength I)	(ksi)	--	--	--	--
$M_u + \frac{1}{3} f_l S_x$	('k)	1,218	1,396	1,118	1,495
$\phi_f M_n$	('k)	3,408	--	3,408	--
f_s DC1	(ksi)	3.8	6.9	3.2	7.1
f_s DC2	(ksi)	1.0	2.1	0.9	2.2
f_s DW	(ksi)	0.9	2.0	0.8	2.1
f_s (LL+IM)	(ksi)	8.4	9.4	7.9	10.3
f_l (Service II)	(ksi)	--	--	--	--
$f_s + f_f/2$ (Service II)	(ksi)	16.6	23.2	15.2	24.8
Service II Resistance	(ksi)	47.5	47.5	47.5	47.5
$f_s + f_f/3$ (Strength I)	(ksi)	--	30.7	--	32.8
$\phi_f F_n$	(ksi)	--	50.0	--	50.0
V_f	(k)	42.6	44.7	43.5	47.7

GIRDER REACTION TABLE				
		Abuts.	Piers 1 or 3	Pier 2
LLDF		0.7132	0.7132	0.7132
OCF		--	--	--
R_{DC1}	(k)	17.8	56.6	56.9
R_{DC2}	(k)	5.8	19.5	19.6
R_{DW}	(k)	5.5	18.3	18.4
R_{LL}	(k)	50.6	80.1	81.4
R_{IM}	(k)	13.2	16.2	16.2
R_{Total} (Strength I)(Impact)	(k)	149.2	291.0	294.1
R_{Total} (Strength I)(No Impact)	(k)	126.2	262.7	265.8

Note:
M_{LL} and R_{LL} include the effects of centrifugal force and superelevation.

I_s, S_s : Non-composite moment of inertia and section modulus of the steel section used for computing f_s(Total-Strength I, and Service II) due to non-composite dead loads (in.^{4} and in.^{3}).

$I_c(n)$, $S_c(n)$: Composite moment of inertia and section modulus of the steel and deck based upon the modular ratio, "n", used for computing f_s(Total-Strength I, and Service II) in uncracked sections due to short-term composite live loads (in.^{4} and in.^{3}).

$I_c(3n)$, $S_c(3n)$: Composite moment of inertia and section modulus of the steel and deck based upon 3 times the modular ratio, "3n", used for computing f_s(Total-Strength I, and Service II) in uncracked sections, due to long-term composite (superimposed) dead loads (in.^{4} and in.^{3}).

$I_c(cr)$, $S_c(cr)$: Composite moment of inertia and section modulus of the steel and longitudinal deck reinforcement, used for computing f_s (Total-Strength I and Service II) in cracked sections, due to both short-term composite live loads and long-term composite (superimposed) dead loads (in.^{4} and in.^{3}).

S_x : Section modulus about the major axis of a section to the controlling flange, tension or compression, taken as yield moment with respect to the controlling flange over the yield strength of the controlling flange (in.^{3}).

DC1: Un-factored non-composite dead load (kips/ft.).

M_{DC1} : Un-factored moment due to non-composite dead load (kip-ft.).

DC2: Un-factored long-term composite (superimposed excluding future wearing surface) dead load (kips/ft.).

M_{DC2} : Un-factored moment due to long-term composite (superimposed excluding future wearing surface) dead load (kip-ft.).

DW: Un-factored long-term composite (superimposed future wearing surface only) dead load (kips/ft.).

M_{DW} : Un-factored moment due to long-term composite (superimposed future wearing surface only) dead load (kip-ft.).

LLDF: Live Load Distribution Factor for moment and shear computed according to Article 4.6.2.2 and further IDOT provisions.

M_{LL+IM}: Un-factored live load moment plus dynamic load allowance (impact) (kip-ft.).

M_u : Strength I load combination of factored design moments (kip-ft.).
$1.25 (M_{DC1} + M_{DC2}) + 1.5 M_{DW} + 1.75 M_{LL+IM}$

f_f : Factored calculated flange lateral bending stress as calculated using Article 6.10.1.6 and as further simplified by IDOT provisions (ksi).

$\phi_f M_n$: Factored nominal flexural resistance of the section determined as specified in Article 6.10.7.1 or A6 as applicable (kip-ft.).

f_s DC1: Un-factored stress at edge of flange for controlling steel flange due to vertical non-composite dead loads as calculated below (ksi).
M_{DC1} / S_s

f_s DC2: Un-factored stress at edge of flange for controlling steel flange due to vertical composite dead loads as calculated below (ksi).
$M_{DC2} / S_c(3n)$ or $M_{DC2} / S_c(cr)$ as applicable.

f_s DW: Un-factored stress at edge of flange for controlling steel flange due to vertical composite future wearing surface loads as calculated below (ksi).
$M_{DW} / S_c(3n)$ or $M_{DW} / S_c(cr)$ as applicable.

f_s (LL + IM): Un-factored stress at edge of flange for controlling steel flange due to vertical composite live load plus impact loads as calculated below (ksi).
$M_{LL+IM} / S_c(n)$ or $M_{LL+IM} / S_c(cr)$ as applicable.

$f_s + f_f/2$ (Service II): Sum of stresses as computed below (ksi).
f_s DC1 + f_s DC2 + f_s DW + 1.3 f_s (LL + IM) + $f_f/2$

Service II Resistance: Composite ($0.95R_hF_{yf}$) or noncomposite ($0.80R_hF_{yf}$) stress capacity according to Article 6.10.4.2 (ksi).

$f_s + f_f/3$ (Strength I): Sum of stresses as computed below on non-compact sections (ksi).
1.25 (f_s DC1 + f_s DC2) + 1.5 f_s DW + 1.75 f_s (LL + IM) + $f_f/3$

$\phi_f F_n$: Factored nominal flexural resistance of the section as specified in Article 6.10.7.2 or 6.10.8 as applicable (ksi).

V_f : Maximum factored shear range in span computed according to Article 6.10.10.

OCF: Obtuse Correction Factor according to Article 4.6.2.2.3c or as further simplified by IDOT provisions.

R_{DC1} : Un-factored reaction due to non-composite dead load (kip).

R_{DC2} : Un-factored reaction due to long-term composite (superimposed excluding future wearing surface) dead load (kip).

R_{DW} : Un-factored reaction due to long-term composite (superimposed future wearing surface only) dead load (kip).

R_{LL} : Un-factored live load reaction (kip).

R_{IM} : Un-factored dynamic load allowance (impact) (kip).

R_{Total} (Strength I)(Impact): Strength I load combination of factored design reactions (kip).
$1.25 (R_{DC1} + R_{DC2}) + 1.5R_{DW} + 1.75 (R_{LL} + R_{IM})$

R_{Total} (Strength I)(No Impact): Strength I load combination of factored design reactions, not including dynamic load allowance (Impact) (kip).
$1.25 (R_{DC1} + R_{DC2}) + 1.5R_{DW} + 1.75 (R_{LL})$

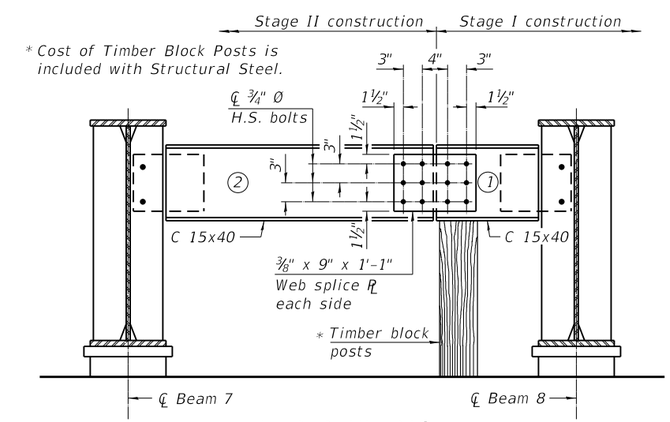

END DIAPHRAGM
D3 (2 Required)

END DIAPHRAGM STAGE CONSTRUCTION SEQUENCE

1.) Order diaphragm in two sections.
2.) Attach section 1 of diaphragm to beam 8.
3.) Place timber block posts between section 1 of diaphragm and abutment bearing section.
4.) Attach section 2 of diaphragm to both beam 7 and section 1 of diaphragm during stage II construction with splice plates.
5.) Remove timber block posts.

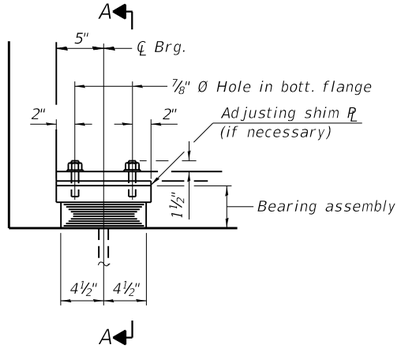

ELEVATION AT ABUT.

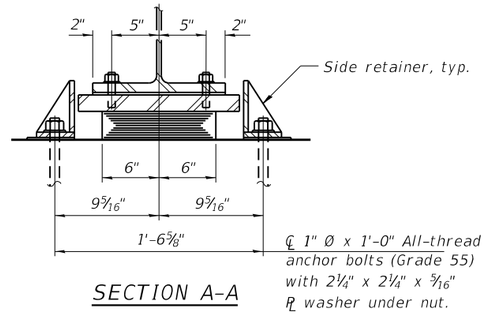

SECTION A-A

TYPE I ELASTOMERIC EXP. BRG. ASSEMBLY I FOR ABUTMENTS

(28 Required)

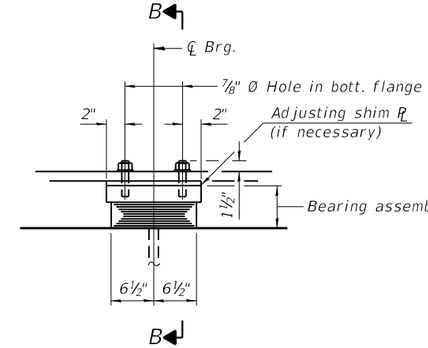

ELEVATION AT ABUT.

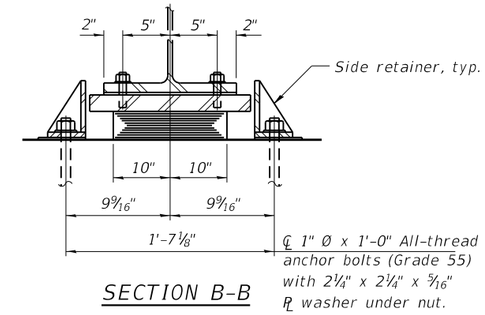

SECTION B-B

TYPE I ELASTOMERIC EXP. BRG. ASSEMBLY II FOR PIERS 1 AND 3

(28 Required)

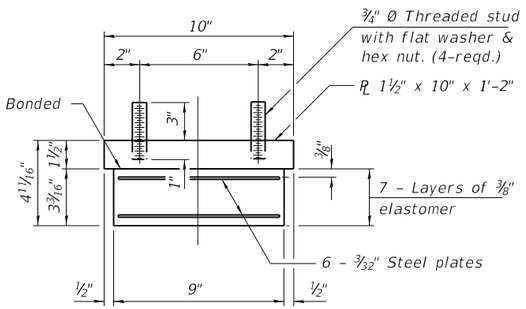

BEARING ASSEMBLY I

Note:
Shim plates shall not be placed under bearing assembly.

Notes:
Side retainers and stainless steel plates shall be included in the cost of Elastomeric Bearing Assembly, Type I.
Anchor bolts and side retainers at all supports shall be installed as each member is erected unless an equivalent temporary means of lateral restraint is used.
Two 1/8" adjusting shims shall be provided for each bearing in addition to all the other plates or shims and placed as shown on bearing details.
All bearing plates, side retainers, anchor bolts, nuts, washers and pintles shall be galvanized according to AASHTO M111 or M232 as applicable.
The structural steel plates of the Bearing Assembly shall be AASHTO M270, Grade 50.
The structural steel plates and pintles of the fixed bearings shall be AASHTO M270, Grade 50.

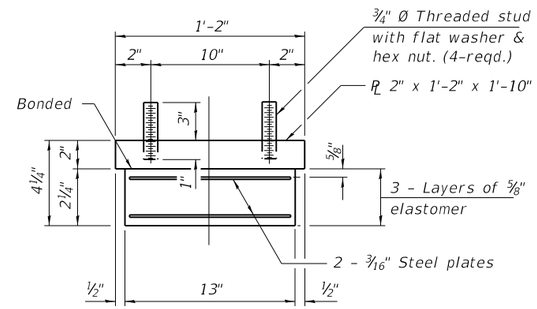

BEARING ASSEMBLY II

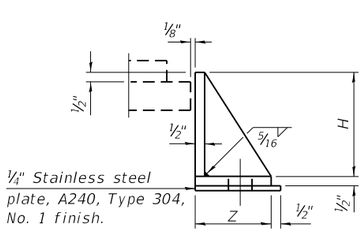

SIDE RETAINER

Equivalent rolled angle with stiffeners will be allowed in lieu of welded plates.

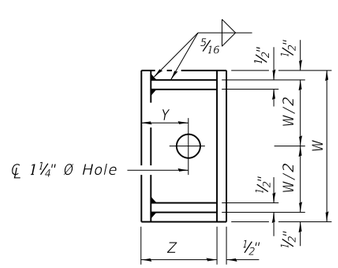

SIDE RETAINER DIMENSIONS

Item	Z	W	H	Y
Assembly I	5 1/2"	8"	4 3/4"	2 1/8"
Assembly II	7 7/8"	12"	3 3/4"	2 3/8"

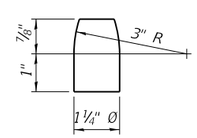

PINTLE

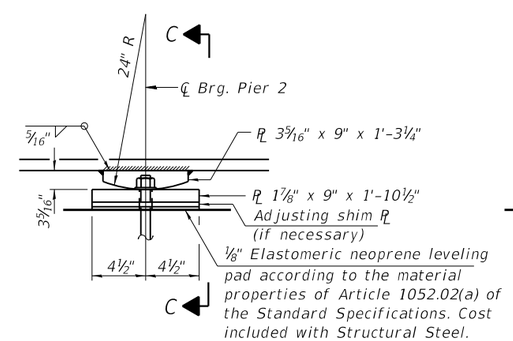

ELEVATION AT PIER

FIXED BEARING

(14 Required)

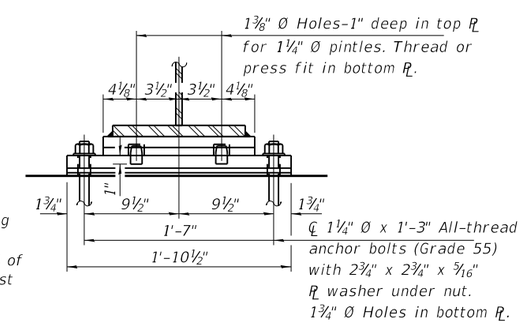

SECTION C-C

BILL OF MATERIAL

Item	Unit	Total
Elastomeric Bearing Assembly Type I	Each	56
Anchor Bolts, 1"	Each	112
Anchor Bolts, 1 1/4"	Each	28

USER NAME =	DESIGNED - BJD	REVISED -	
	CHECKED - MGH	REVISED -	
PLOT SCALE =	DRAWN - GM	REVISED -	
PLOT DATE =	CHECKED - BJD	REVISED -	

STATE OF ILLINOIS
DEPARTMENT OF TRANSPORTATION

BEARING DETAILS
STRUCTURE NO. 016-0388

SHEET S10-26 OF S10-37 SHEETS

FAP RTE.	SECTION	COUNTY	TOTAL SHEETS	SHEET NO.
581	(42-B-11-1) BR, BJR 24	COOK	761	724

CONTRACT NO. 62W87

ILLINOIS | FED. AID PROJECT

MODEL: Default
FILE NAME: pw:\\wsp-us-pw.bentley.com:wsp-us-pw-ILLDocuments\Project IDOT 2050082201 - IDOT District 1 Various\Structures\Work Order 1016-0388 - 159th over I-94\Sheets\26_016-0388 - BearingDetails.dgn

3/11/2025 12:47:10 PM

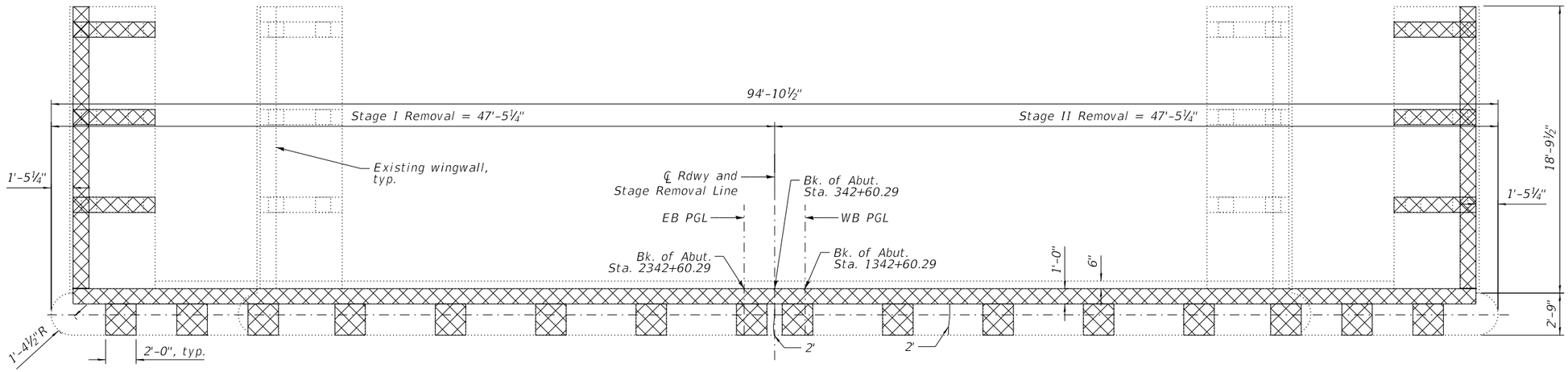

PLAN

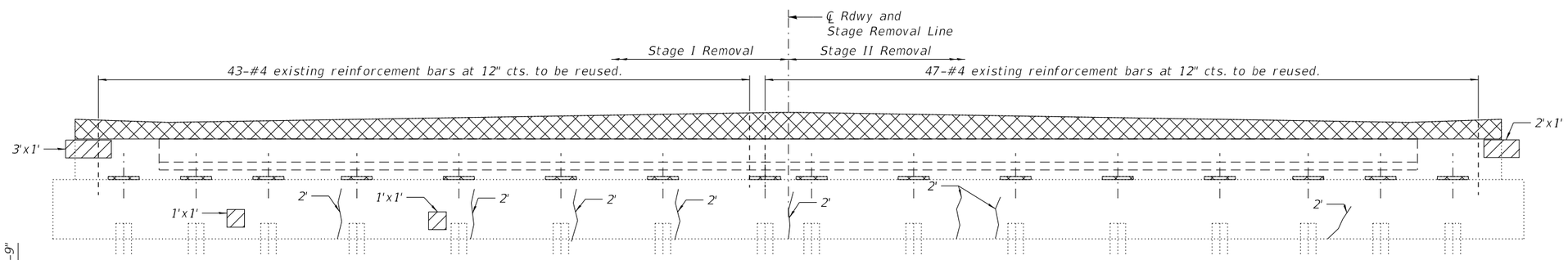

ELEVATION
(Looking West)

Notes:

1. Cross hatched areas indicate the limits of Concrete Removal.
2. Existing reinforcement extending into new construction shall be cleaned, straightened, and incorporated into the new construction. Cost included with Concrete Removal.
3. Existing reinforcement not extending into new construction shall be cut flush and covered with a 2" layer of cement grout. Cost included with Concrete Removal.
4. The elevations shown above were calculated from the survey information provided by the district.
5. Any reinforcement bars that are damaged during concrete removal operations shall be repaired or replaced using an approved bar splicer or anchorage system. Cost incidental to "Concrete Removal".
6. Any reinforcement bars that are damaged during concrete removal operations shall be repaired or replaced using an approved bar splicer or anchorage system. Cost incidental to "Concrete Removal".

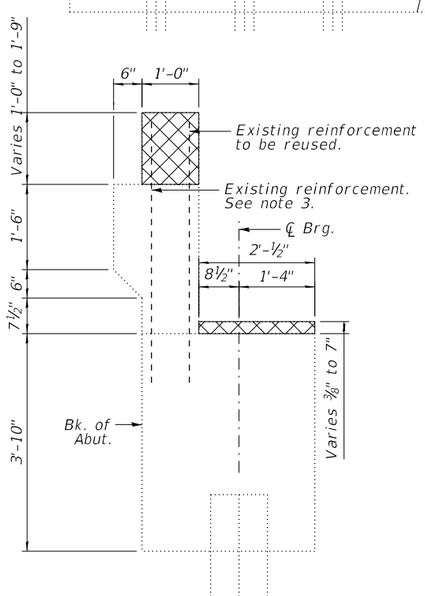

SECTION A-A

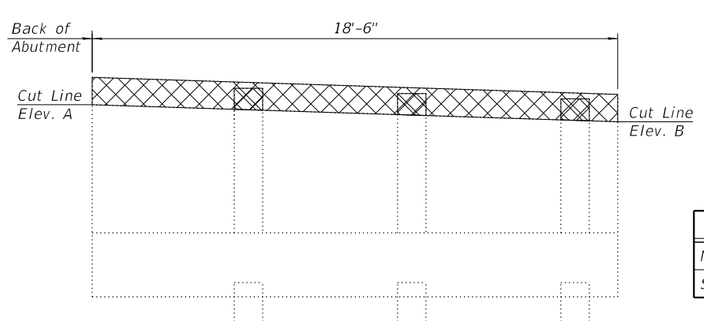

WINGWALL ELEVATION

ITEM	A	B
North Wingwall	612.97	612.65
South Wingwall	612.91	611.59

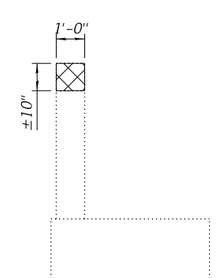

SECTION THRU WINGWALL

LEGEND:

- Concrete Removal
- Structural Repair Of Concrete (Depth Equal To Or Less Than 5 In)
- Epoxy Crack Injection

BILL OF MATERIAL

ITEM	UNIT	QUANTITY
Structural Repair Of Concrete (Depth Equal To Or Less Than 5 In)	Sq. Ft.	7
Epoxy Crack Injection	Foot	20
Concrete Removal	Cu. Yd.	8.0

wsp	USER NAME =	DESIGNED - BJD	REVISED -
		CHECKED - MGH	REVISED -
	PLOT SCALE =	DRAWN - GM	REVISED -
	PLOT DATE =	CHECKED - BJD	REVISED -

STATE OF ILLINOIS
DEPARTMENT OF TRANSPORTATION

WEST ABUTMENT REMOVAL AND REPAIRS
STRUCTURE NO. 016-0388

SHEET S10-27 OF S10-37 SHEETS

FAP RTE.	SECTION	COUNTY	TOTAL SHEETS	SHEET NO.
581	(42-B-11-1) BR, BJR 24	COOK	761	725

CONTRACT NO. 62W87

ILLINOIS FED. AID PROJECT

MODEL: Default
FILE NAME: pw:\\wsp-us-pw.bentley.com:wsp-us-pw-IL\Documents\Project IDOT 2050082201 - IDOT District 1 Various\Structures\Work Order 1\016-0388 - 159th over I-94\Sheets\27_016-0388_West Abutment Removal and Repairs.dgn

3/11/2025 12:47:14 PM

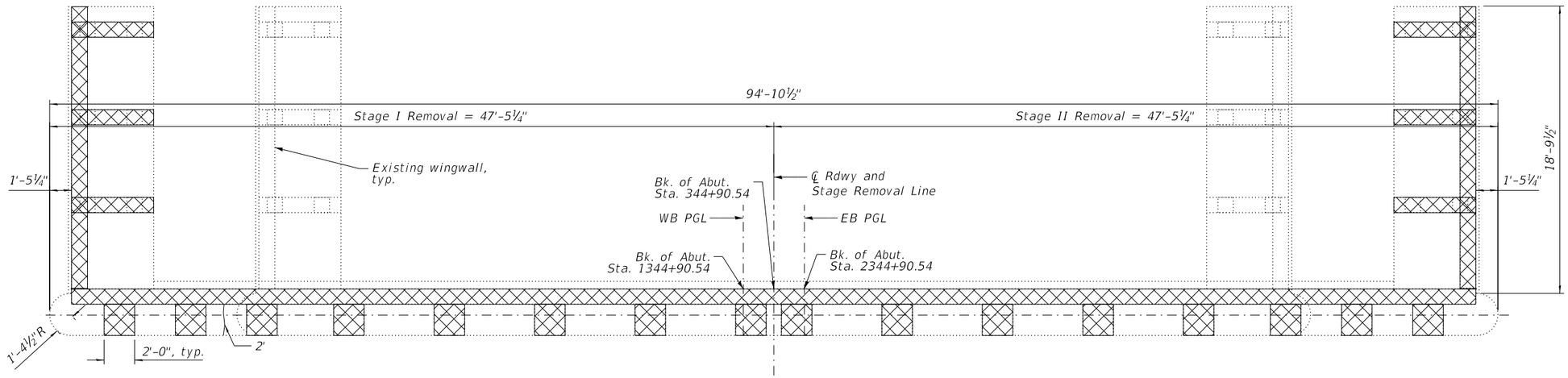

PLAN

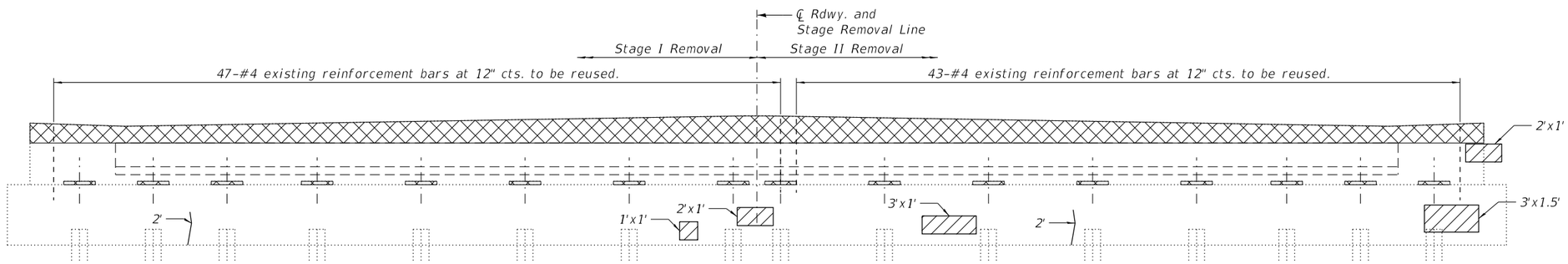

ELEVATION
(Looking East)

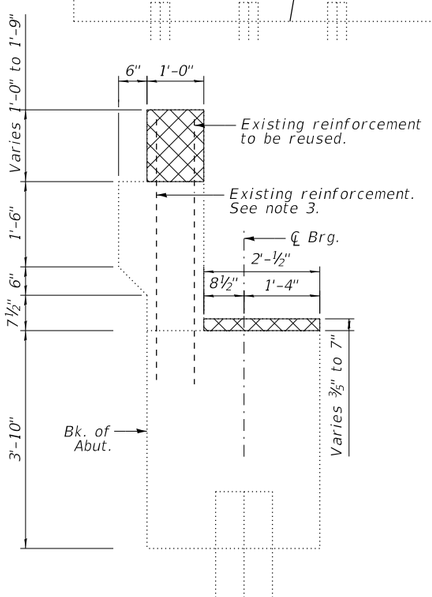

SECTION A-A

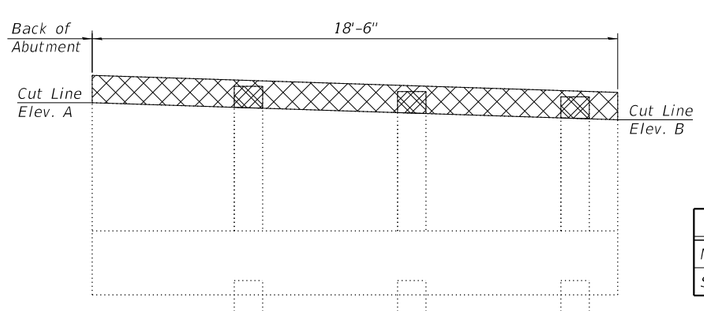

WINGWALL ELEVATION

ITEM	A	B
North Wingwall	613.09	612.79
South Wingwall	613.05	612.75

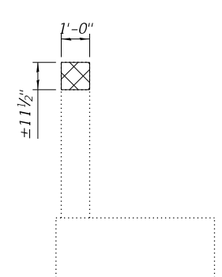

SECTION THRU WINGWALL

Notes:
1. See sheet S10-27 for notes.

LEGEND:

- Concrete Removal
- Structural Repair Of Concrete (Depth Equal To Or Less Than 5 In)
- Epoxy Crack Injection

BILL OF MATERIAL

ITEM	UNIT	QUANTITY
Structural Repair Of Concrete (Depth Equal To Or Less Than 5 In)	Sq. Ft.	13
Epoxy Crack Injection	Foot	6
Concrete Removal	Cu. Yd.	7.8

USER NAME =	DESIGNED - BJD	REVISED -	
	CHECKED - MGH	REVISED -	
PLOT SCALE =	DRAWN - GM	REVISED -	
PLOT DATE =	CHECKED - BJD	REVISED -	

STATE OF ILLINOIS
DEPARTMENT OF TRANSPORTATION

EAST ABUTMENT REMOVAL AND REPAIRS
STRUCTURE NO. 016-0388

SHEET S10-28 OF S10-37 SHEETS

FAP RTE.	SECTION	COUNTY	TOTAL SHEETS	SHEET NO.
581	(42-B-11-1) BR, BJR 24	COOK	761	726

CONTRACT NO. 62W87

ILLINOIS FED. AID PROJECT

MODEL: Default
FILE NAME: pw:\\wsp-us-pw.bentley.com:wsp-us-pw-IL\Documents\Project IDOT 2050082201 - IDOT District 1 Various\Structures\Work Order 1\016-0388 - 159th over I-94\Sheets\28_016-0388_East Abutment Removal and Repairs.dgn

3/11/2025 12:47:18 PM

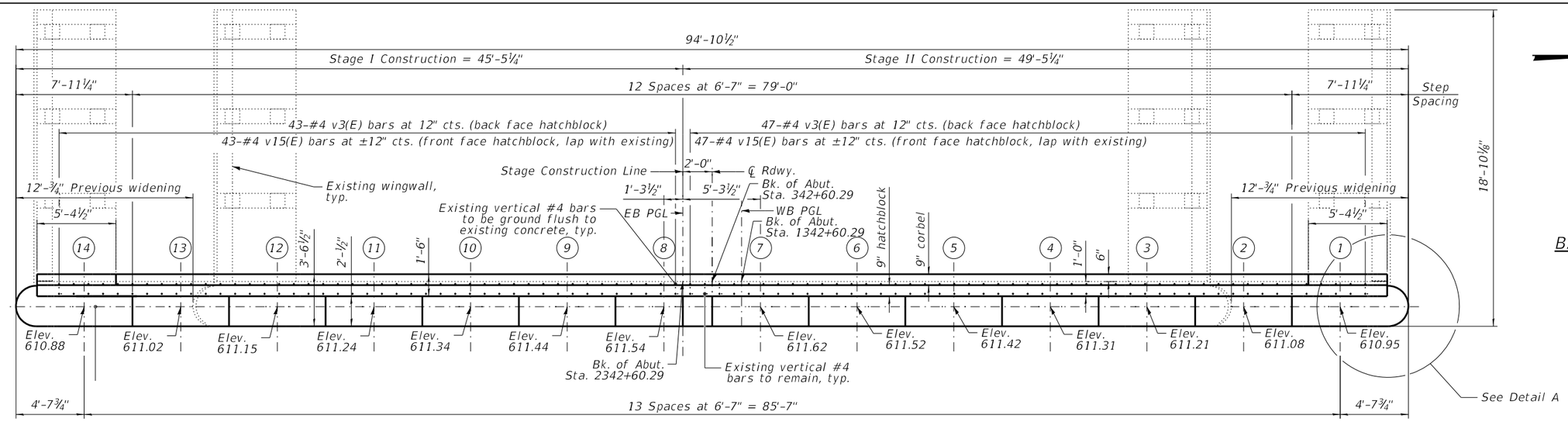

PLAN

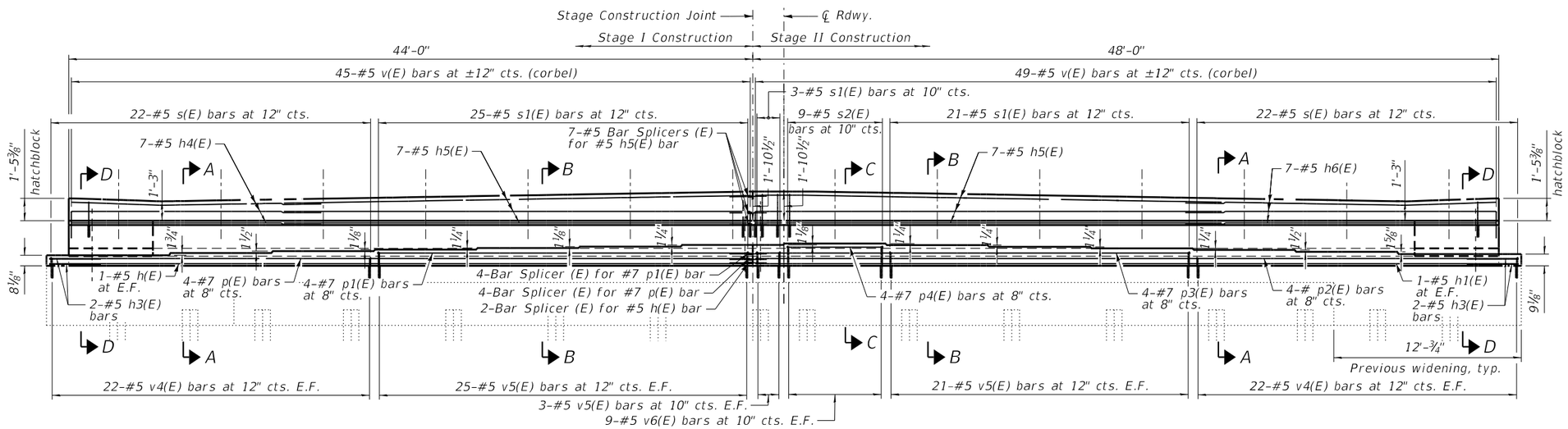

ELEVATION
(Looking West)

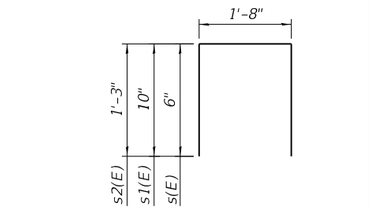

BARS s(E), s1(E) AND s2(E)

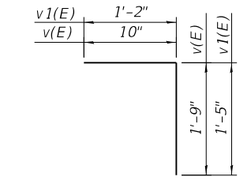

v(E) and v1(E) BARS

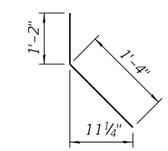

v2(E) BAR

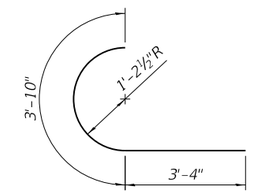

h3(E) BAR

WEST ABUTMENT BILL OF MATERIAL

Bar	No.	Size	Length	Shape
h(E)	2	#5	45'-1"	
h1(E)	2	#5	49'-1"	
h2(E)	6	#4	7'-8"	
h3(E)	4	#5	7'-2"	
h4(E)	7	#4	16'-1"	
h5(E)	14	#4	30'-0"	
h6(E)	7	#4	20'-1"	
p(E)	4	#7	45'-1"	
p1(E)	4	#7	24'-0"	
p2(E)	4	#7	49'-1"	
p3(E)	4	#7	28'-0"	
p4(E)	4	#7	6'-3"	
s(E)	44	#5	2'-8"	
s1(E)	49	#5	3'-4"	
s2(E)	9	#5	4'-2"	
v(E)	94	#5	2'-7"	
v1(E)	12	#4	2'-7"	
v2(E)	12	#4	2'-6"	
v3(E)	90	#4	2'-2"	
v4(E)	88	#5	1'-3"	
v5(E)	98	#5	1'-7"	
v6(E)	18	#5	2'-0"	
v15(E)	90	#4	1'-10"	
Concrete Structures			Cu. Yd.	9.0
Reinforcement Bars, Epoxy Coated			Pound	6,300
Concrete Sealer			Sq. Ft.	463

Notes:

1. Cost of drilling and grouting reinforcing bars included in cost or Concrete Structures.

2. Bars shall be drilled and grout according to Article 584 of the Standard Specifications. Bars shall have a 9" minimum embedment depth.

3. All construction joints between new and existing concrete shall be Bonded Construction Joints.

4. Existing reinforcement extending into new construction shall be cleaned, straightened, and incorporated into the new construction. Cost included with Concrete Removal.

5. The elevations shown above were calculated from the survey information provided by the district.

6. Hatched area to be poured separately after superstructure falseworkhas been removed and after approach slab side formwork has been removed.

7. The top of back wall and approach slab seat shall have a constant slope determined from the control points shown.

8. Space reinforcement in steps to miss anchor bolts.

9. Pour steps monolithically with cap.

10. See sheet S10-37 for bar splicer details.

11. Concrete Sealer shall be applied to the top surface of new concrete bearing steps and the front faces of the new concrete bearing steps, the new backwall extension and the new hatchblock.

12. For Detail A, Section A-A, Section B-B, Section C-C and Section D-D, see Sheet S10-30A.

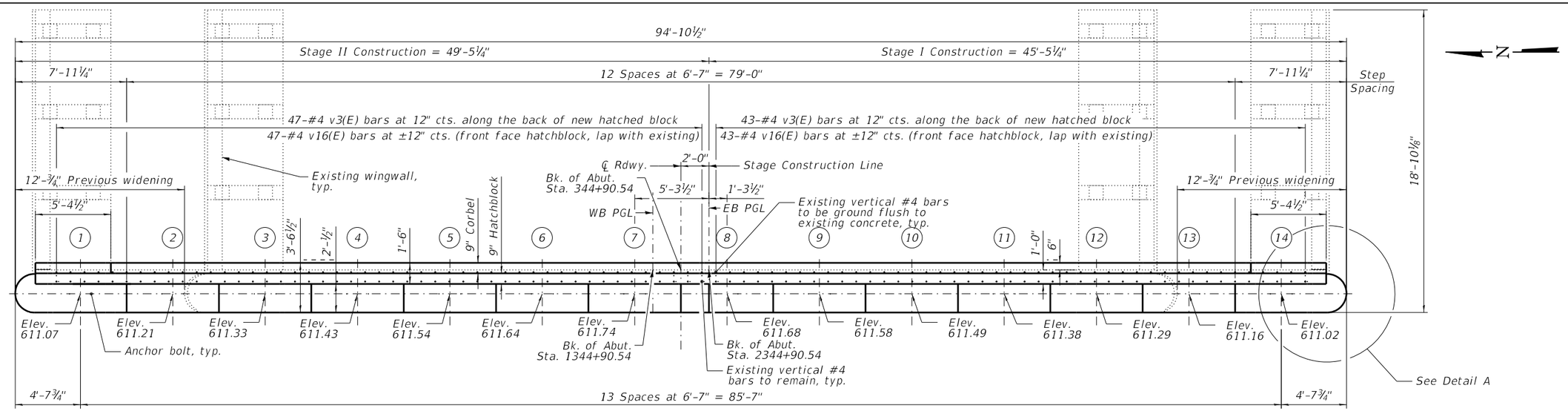

PLAN

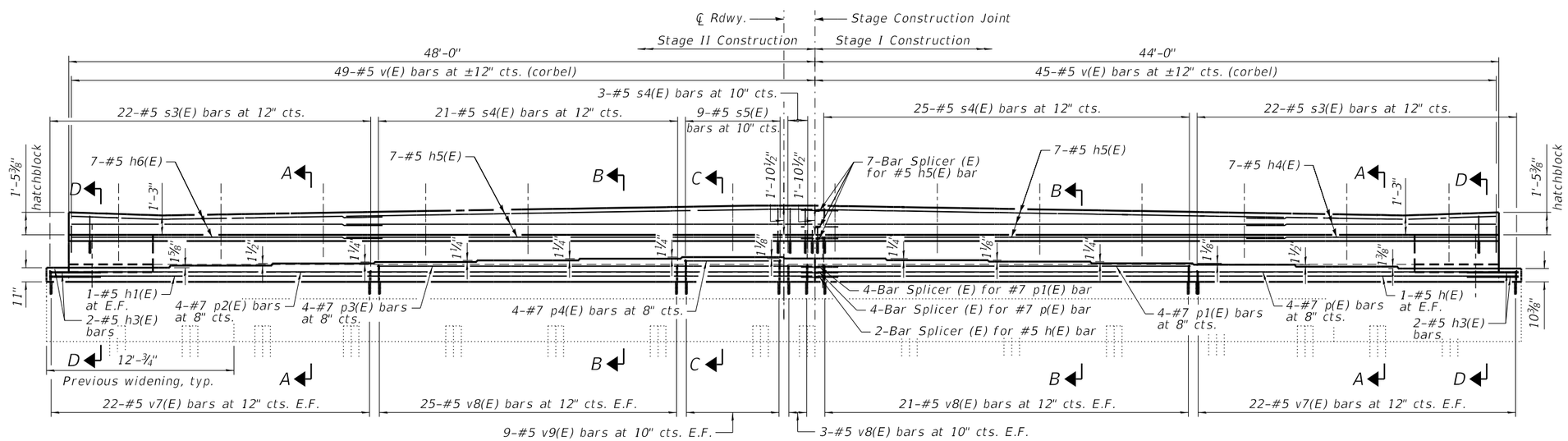

ELEVATION
(Looking East)

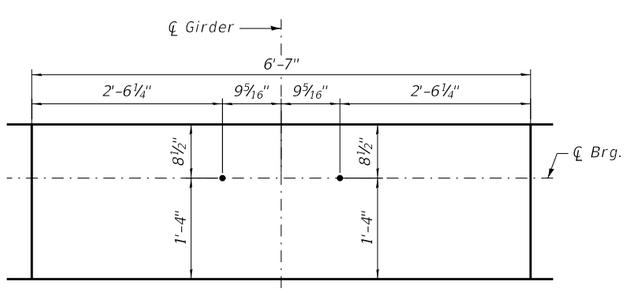

ANCHOR BOLT LAYOUT DETAIL
(West Abutment is similar)

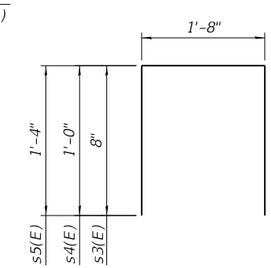

BARS s3(E), s4(E) AND s5(E)

Notes:
1. See Sheet S10-29 for notes.

EAST ABUTMENT BILL OF MATERIAL

Bar	No.	Size	Length	Shape
h(E)	2	#5	45'-1"	
h1(E)	2	#5	49'-1"	
h2(E)	6	#4	7'-8"	
h3(E)	4	#5	7'-2"	
h4(E)	7	#4	16'-1"	
h5(E)	14	#4	30'-0"	
h6(E)	7	#4	20'-1"	
p(E)	4	#7	45'-1"	
p1(E)	4	#7	24'-0"	
p2(E)	4	#7	49'-1"	
p3(E)	4	#7	28'-0"	
p4(E)	4	#7	6'-3"	
s3(E)	44	#5	3'-0"	
s4(E)	49	#5	3'-8"	
s5(E)	9	#5	4'-4"	
v(E)	94	#5	2'-7"	
v1(E)	12	#4	2'-7"	
v2(E)	12	#4	2'-6"	
v3(E)	90	#4	2'-2"	
v7(E)	88	#5	1'-6"	
v8(E)	98	#5	1'-10"	
v9(E)	18	#5	2'-4"	
v16(E)	90	#4	2'-0"	
Concrete Structures			Cu. Yd.	10.3
Reinforcement Bars, Epoxy Coated			Pound	6,490
Concrete Sealer			Sq. Ft.	490

MODEL: Default
FILE NAME: pw:\\wsp-us-pw.bentley.com:wsp-us-pw-ILD\Documents\Project IDOT 2050082201 - IDOT District 1 Various\Structures\Work Order 1\016-0388 - 159th over I-94\Sheets\30_016-0388_East Abutment Modifications.dgn

3/11/2025 12:47:27 PM

USER NAME =	DESIGNED - BJD	REVISED -	
	CHECKED - MGH	REVISED -	
PLOT SCALE =	DRAWN - GM	REVISED -	
PLOT DATE =	CHECKED - BJD	REVISED -	

STATE OF ILLINOIS
DEPARTMENT OF TRANSPORTATION

EAST ABUTMENT MODIFICATIONS
STRUCTURE NO. 016-0388

SHEET S10-30 OF S10-37 SHEETS

FAP RTE.	SECTION	COUNTY	TOTAL SHEETS	SHEET NO.
581	(42-B-11-1) BR, BJR 24	COOK	761	728
		CONTRACT NO. 62W87		
		ILLINOIS	FED. AID PROJECT	

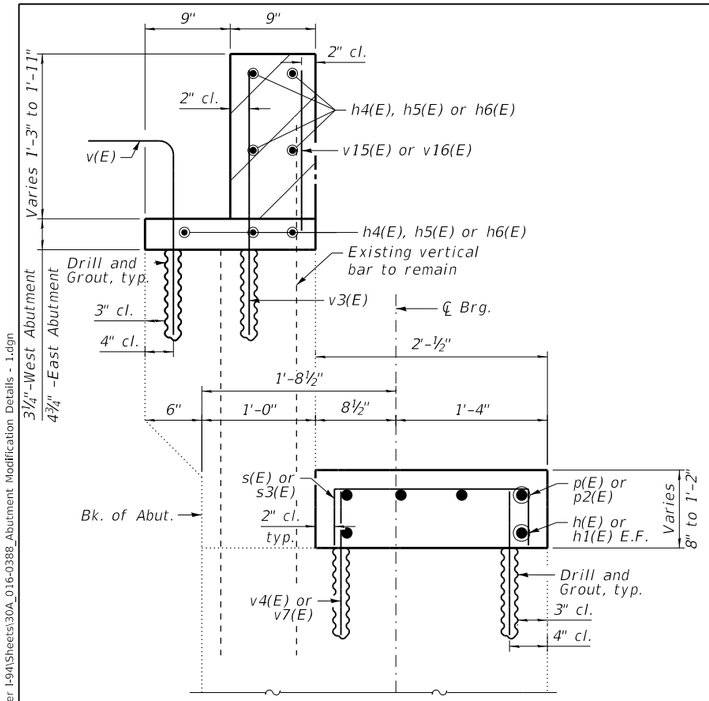

SECTION A-A

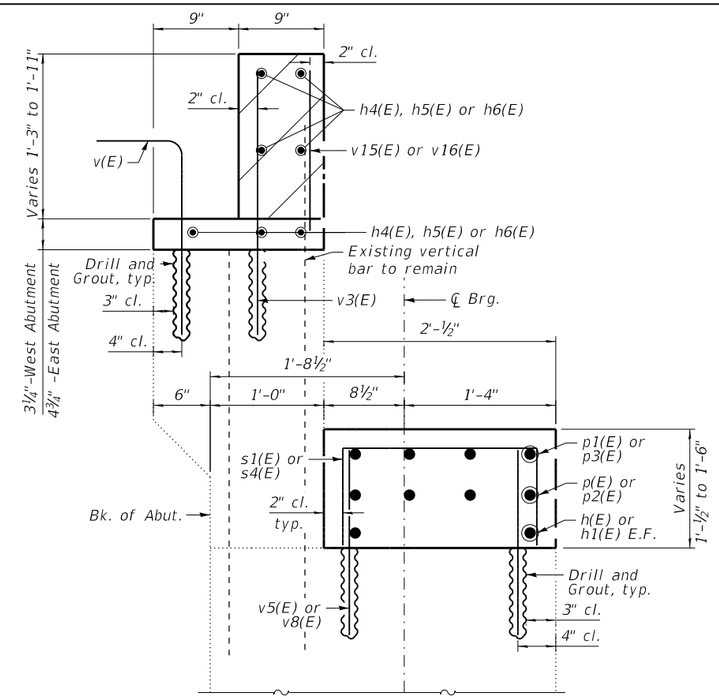

SECTION B-B

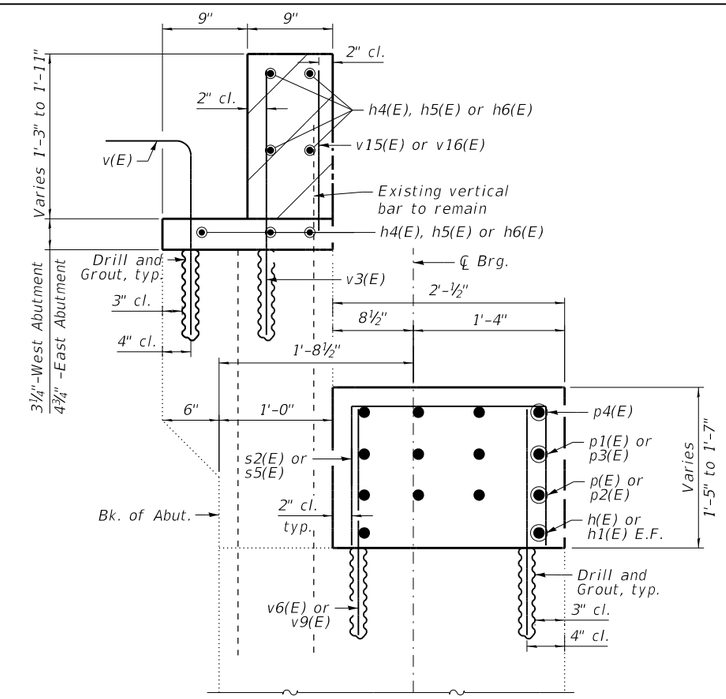

SECTION C-C

Notes:
1. See sheet S10-29 for notes.

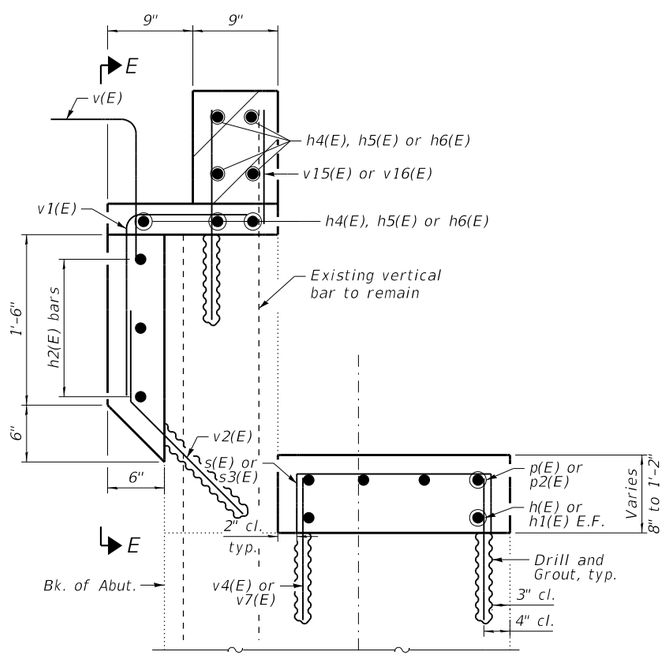

SECTION D-D

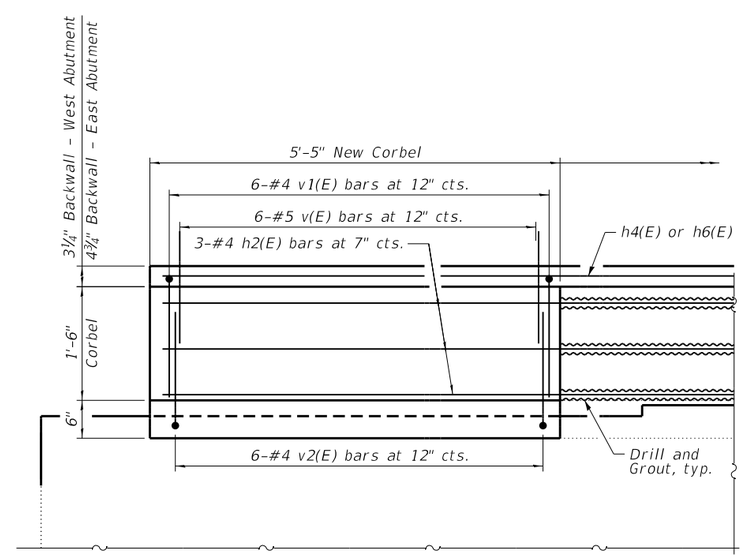

SECTION E-E

Min. Lap Length #4 bar = 2'-5"

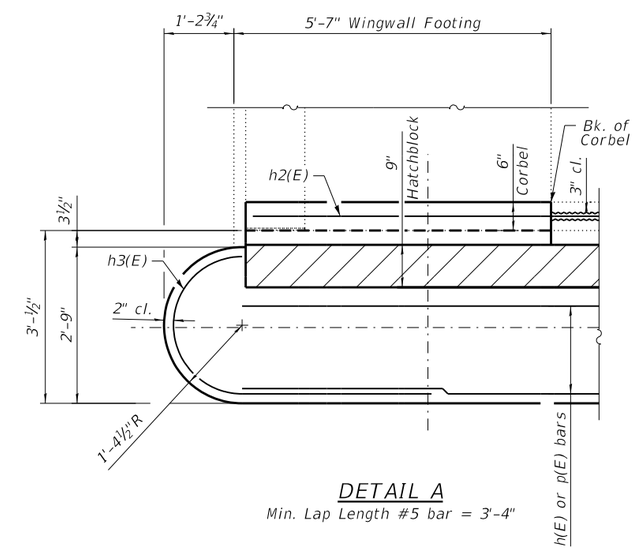

DETAIL A

Min. Lap Length #5 bar = 3'-4"

USER NAME =	DESIGNED - BJD	REVISED -	
	CHECKED - MGH	REVISED -	
PLOT SCALE =	DRAWN - GM	REVISED -	
PLOT DATE =	CHECKED - BJD	REVISED -	

STATE OF ILLINOIS
DEPARTMENT OF TRANSPORTATION

ABUTMENT MODIFICATIONS DETAILS - 1
STRUCTURE NO. 016-0388

SHEET S10-30A OF S10-37 SHEETS

FAP RTE.	SECTION	COUNTY	TOTAL SHEETS	SHEET NO.
581	(42-B-11-1) BR, BJR 24	COOK	761	728A
		CONTRACT NO. 62W87		
		ILLINOIS	FED. AID PROJECT	

MODEL: Default
FILE NAME: pw:\\wsp-us-pw.bentley.com:wsp-us-pw-1\Documents\Project IDOT 2050082201 - IDOT District 1 Various\Structures\Work Order 1\016-0388 - 159th over I-94\Sheets\30A_016-0388_Abutment Modification Details - 1.dgn

3/11/2025 12:47:31 PM

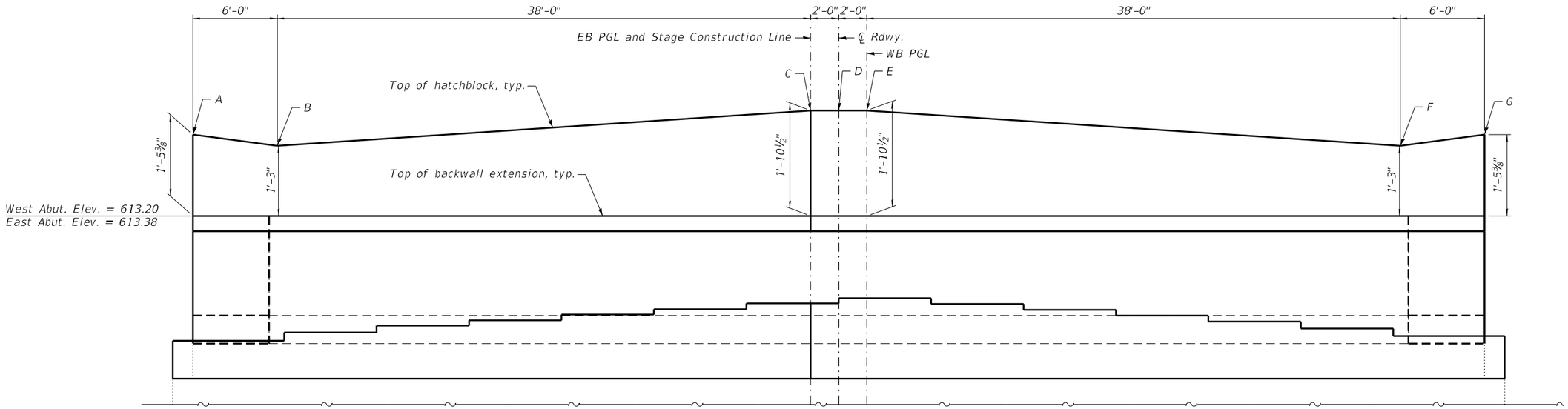

ELEVATION - HATCHBLOCK CONTROL POINTS

West Abutment, Looking West is shown,
East Abutment is opposite hand

HATCHBLOCK ELEVATIONS

Location	West Abutment Elevation	East Abutment Elevation
A	614.65	614.79
B	614.45	614.59
C	615.09	615.23
D	615.12	615.25
E	615.15	615.27
F	614.51	614.63
G	614.71	614.83

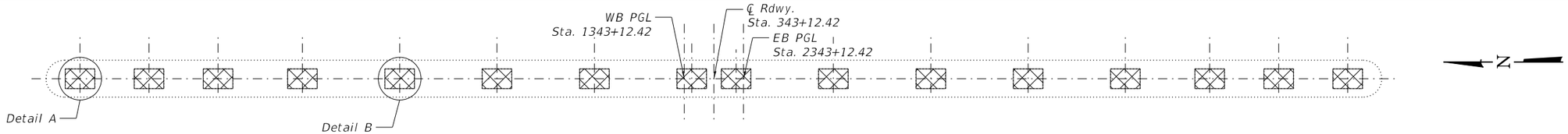

TOP PLAN

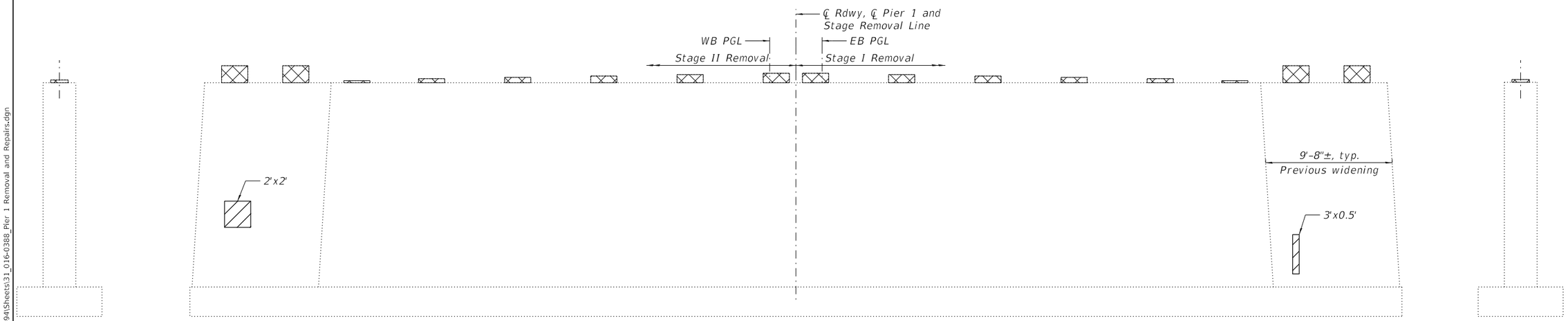

NORTH FACE

WEST FACE

SOUTH FACE

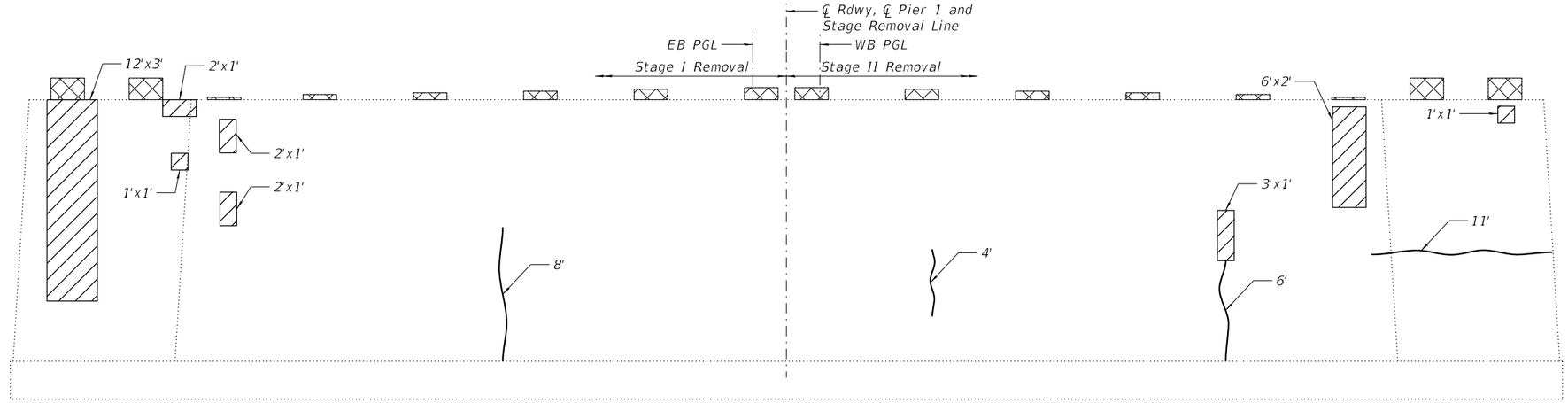

EAST FACE

Notes:
1. Cross hatched areas indicate the limits of Concrete Removal.

2. Existing reinforcement not extending into new construction shall be cut flush and covered with a 2" layer of cement grout. Cost included with Concrete Removal.

3. The elevations shown above were calculated from the survey information provided by the district.

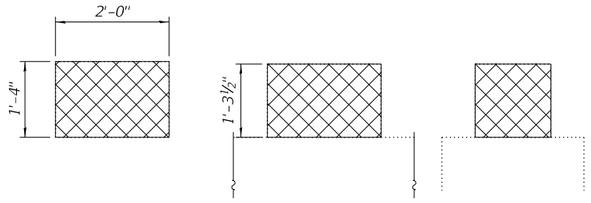

PLAN ELEVATION SECTION

DETAIL A

Applies to bearing seats 1,2,15 and 16
Pier 3 bearing seats are similar.

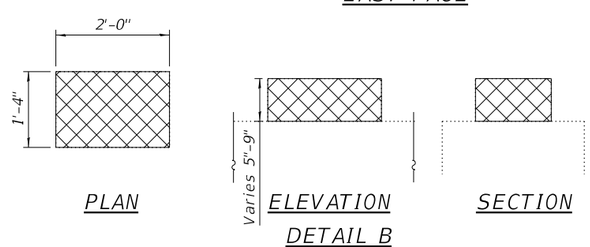

PLAN ELEVATION SECTION

DETAIL B

Applies to bearing seats 5-12
Pier 3 bearing seats are similar.

LEGEND:

- Concrete Removal
- Structural Repair Of Concrete (Depth Equal To Or Less Than 5 In)
- Epoxy Crack Injection

BILL OF MATERIAL

ITEM	UNIT	QUANTITY
Concrete Removal	Cu. Yd.	2.1
Structural Repair Of Concrete (Depth Equal To Or Less Than 5 In)	Sq. Ft.	65
Epoxy Crack Injection	Foot	29

USER NAME =	DESIGNED - BJD	REVISED -	
	CHECKED - MGH	REVISED -	
PLOT SCALE =	DRAWN - GM	REVISED -	
PLOT DATE =	CHECKED - BJD	REVISED -	

STATE OF ILLINOIS
DEPARTMENT OF TRANSPORTATION

PIER 1 REMOVAL AND REPAIRS
STRUCTURE NO. 016-0388

SHEET S10-31 OF S10-37 SHEETS

FAP RTE.	SECTION	COUNTY	TOTAL SHEETS	SHEET NO.
581	(42-B-11-1) BR, BJR 24	COOK	761	729
		CONTRACT NO. 62W87		
	ILLINOIS	FED. AID PROJECT		

MODEL: Default
FILE NAME: pw:\\wsp-us-pw.bentley.com:wsp-us-pw-IL\Documents\Project IDOT 2050082201 - IDOT District 1 Various\Structures\Work Order 1\016-0388 - 159th over I-94\Sheets\31_016-0388_Pier 1 Removal and Repairs.dgn

3/11/2025 12:47:40 PM

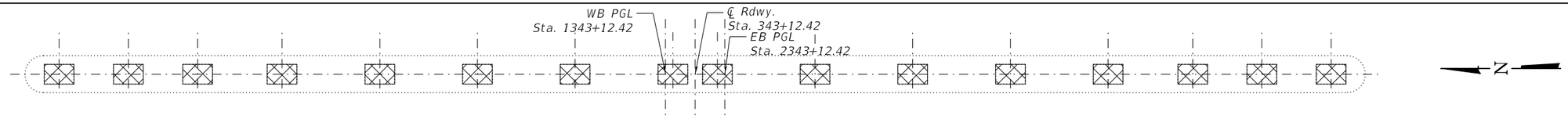

TOP PLAN

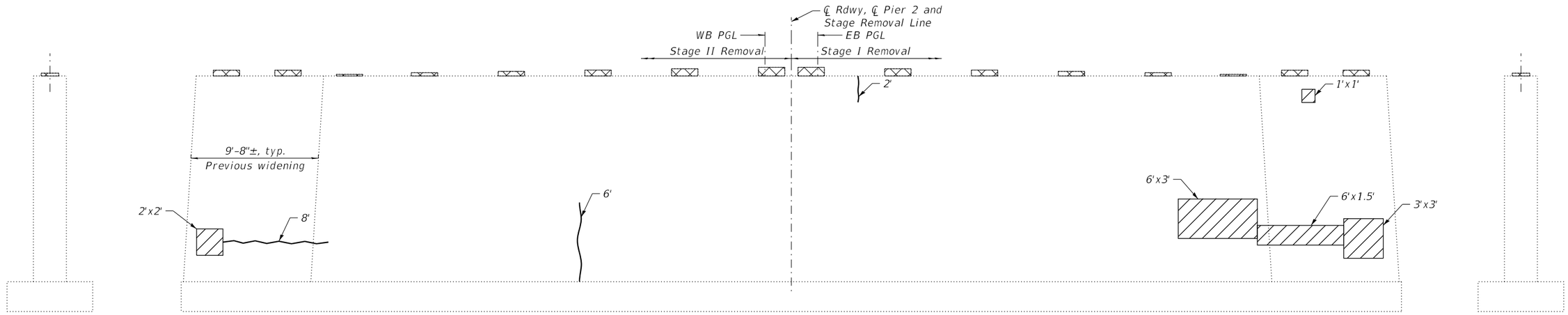

NORTH FACE

WEST FACE

SOUTH FACE

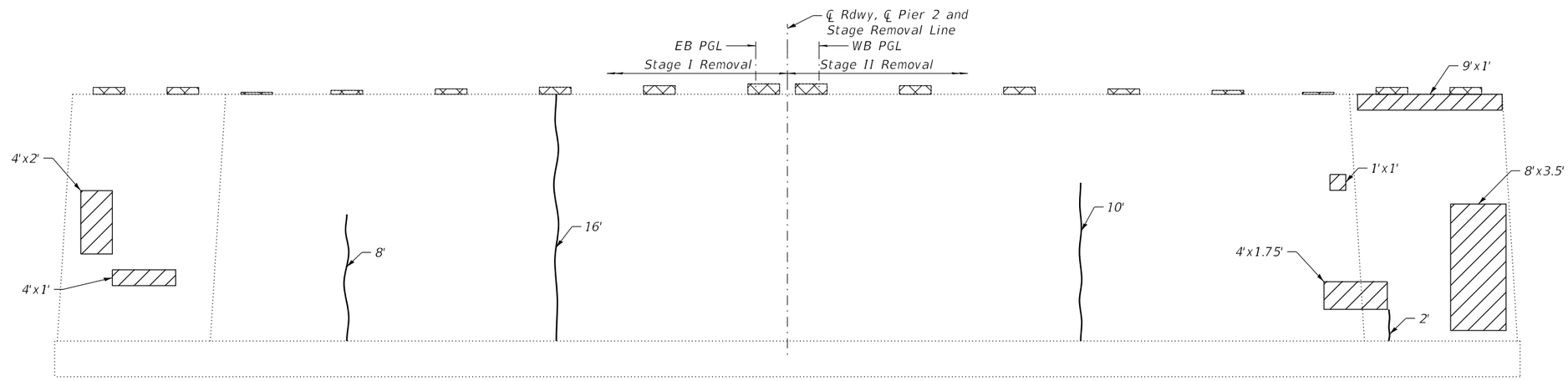

EAST FACE

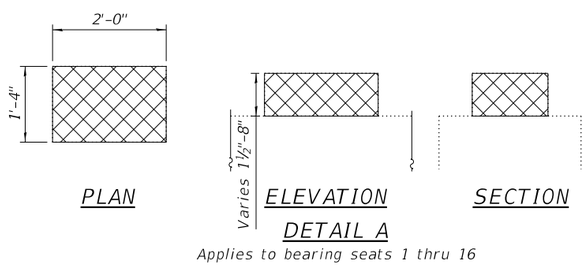

PLAN

ELEVATION

SECTION

DETAIL A

Applies to bearing seats 1 thru 16

Notes:
1. See sheet S10-31 for notes.

BILL OF MATERIAL

ITEM	UNIT	QUANTITY
Concrete Removal	Cu. Yd.	0.7
Structural Repair Of Concrete (Depth Equal To Or Less Than 5 In)	Sq. Ft.	98
Epoxy Crack Injection	Foot	52

LEGEND:

Concrete Removal

Structural Repair Of Concrete (Depth Equal To Or Less Than 5 In)

Epoxy Crack Injection

USER NAME =	DESIGNED - BJD	REVISED -	STATE OF ILLINOIS DEPARTMENT OF TRANSPORTATION
	CHECKED - MGH	REVISED -	
PLOT SCALE =	DRAWN - GM	REVISED -	
PLOT DATE =	CHECKED - BJD	REVISED -	

PIER 2 REMOVAL AND REPAIRS
STRUCTURE NO. 016-0388

SHEET S10-32 OF S10-37 SHEETS

FAP RTE.	SECTION	COUNTY	TOTAL SHEETS	SHEET NO.
581	(42-B-11-1) BR, BJR 24	COOK	761	730

CONTRACT NO. 62W87

ILLINOIS | FED. AID PROJECT

MODEL: Default
FILE NAME: pw:\\wsp-us-pw.bentley.com:wsp-us-pw-IL\Documents\Project IDOT 2050082201 - IDOT District 1 Various\Structures\Work Order 1\016-0388 - 159th over I-94\Sheets\32_016-0388_Pier 2 Removal and Repairs.dgn

3/11/2025 12:47:44 PM

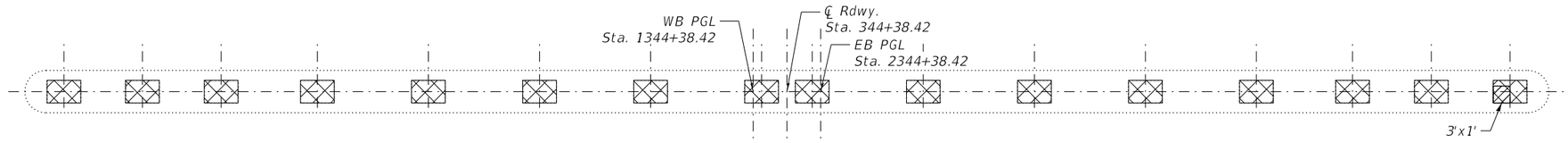

TOP PLAN

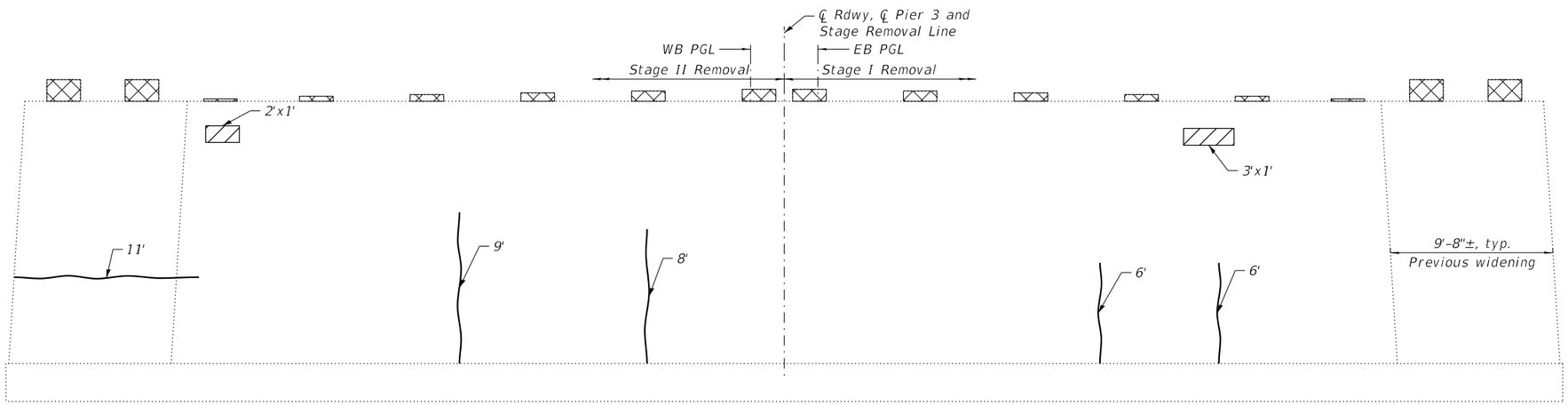

WEST FACE

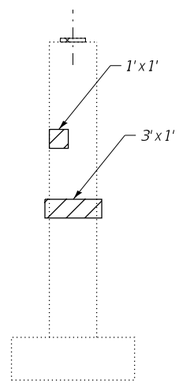

NORTH FACE

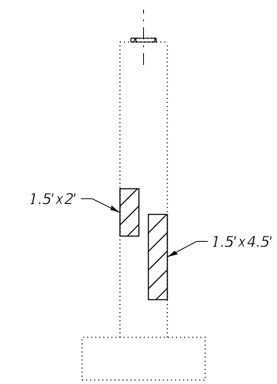

SOUTH FACE

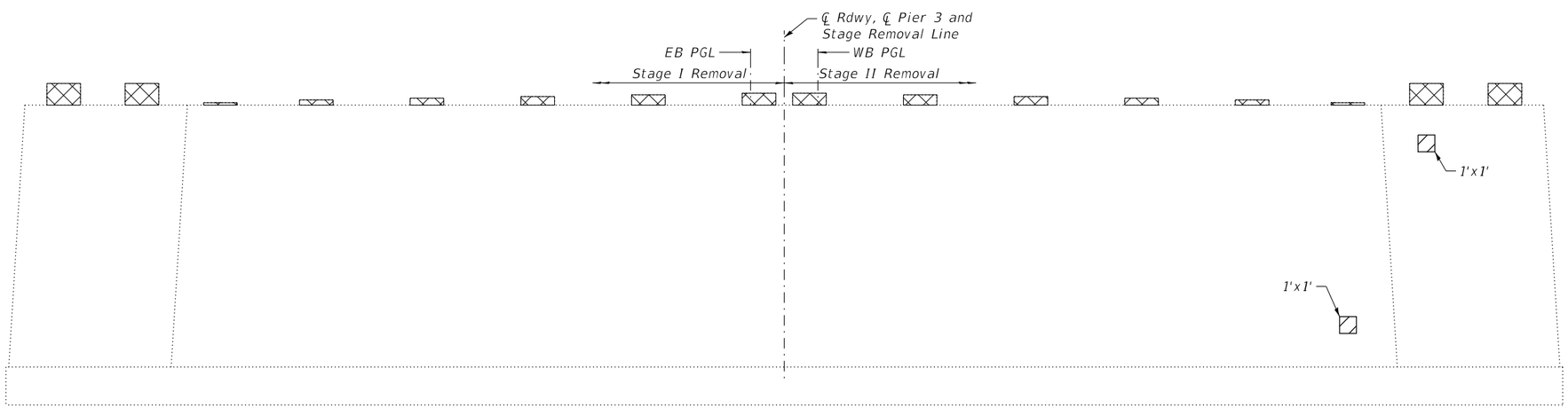

EAST FACE

Notes:
1. See sheet S10-31 for notes.
2. See sheet S10-31 for existing bearing seat details

LEGEND:

Concrete Removal

Structural Repair Of Concrete (Depth Equal To Or Less Than 5 In)

Epoxy Crack Injection

BILL OF MATERIAL

ITEM	UNIT	QUANTITY
Concrete Removal	Cu. Yd.	2.1
Structural Repair Of Concrete (Depth Equal To Or Less Than 5 In)	Sq. Ft.	24
Epoxy Crack Injection	Foot	40

wsp	USER NAME =	DESIGNED - BJD	REVISED -
		CHECKED - MGH	REVISED -
	PLOT SCALE =	DRAWN - GM	REVISED -
	PLOT DATE =	CHECKED - BJD	REVISED -

STATE OF ILLINOIS
DEPARTMENT OF TRANSPORTATION

PIER 3 REMOVAL AND REPAIRS
STRUCTURE NO. 016-0388

SHEET S10-33 OF S10-37 SHEETS

FAP RTE.	SECTION	COUNTY	TOTAL SHEETS	SHEET NO.
581	(42-B-11-1) BR, BJR 24	COOK	761	731

CONTRACT NO. 62W87

ILLINOIS | FED. AID PROJECT

MODEL: Default
FILE NAME: pw:\\wsp-us-pw.bentley.com:wsp-us-pw-IL\Documents\Project IDOT 2050082201 - IDOT District 1 Various\Structures\Work Order 11016-0388 - 159th over I-94\Sheets\33_016-0388_Pier 3 Removal and Repairs.dgn

3/11/2025 12:47:49 PM

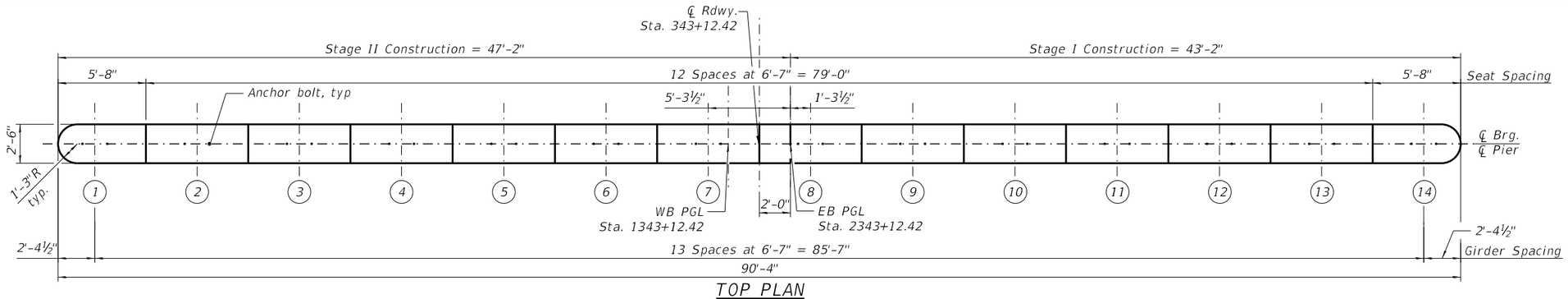

TOP PLAN

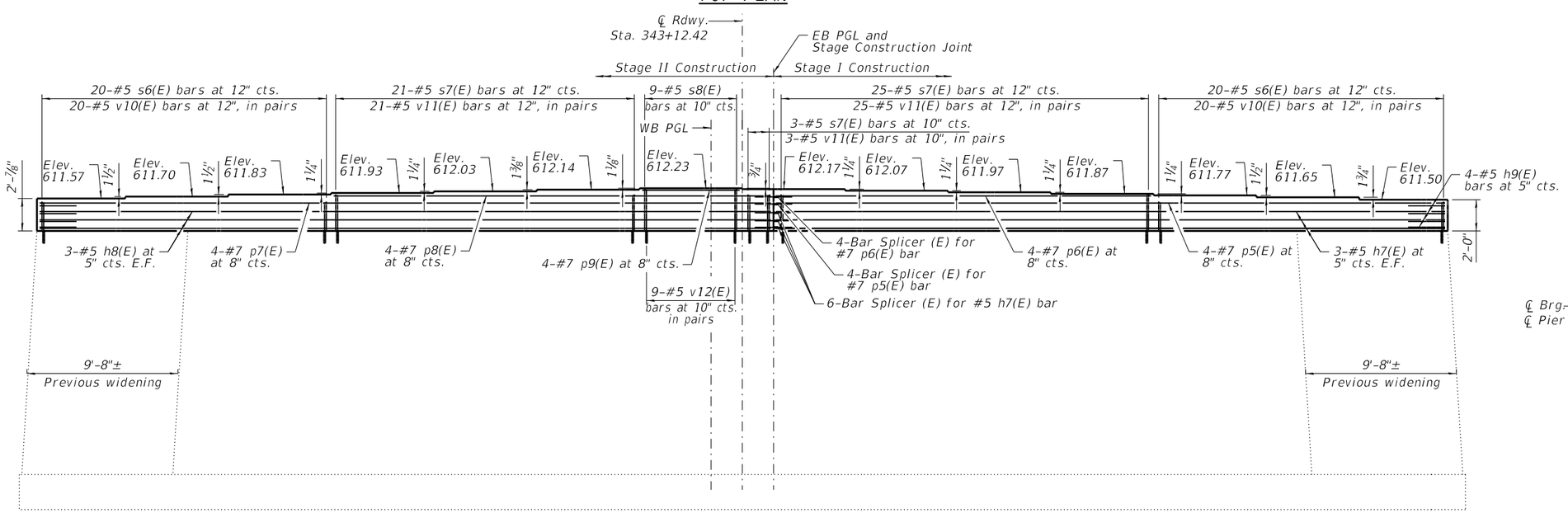

PIER 1 ELEVATION

(Looking East)

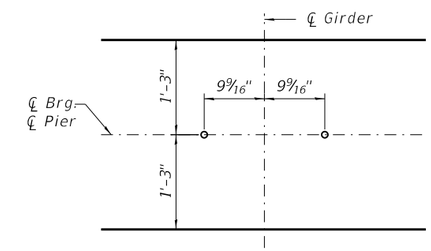

ANCHOR BOLT LAYOUT DETAIL

(Pier 3 similar)

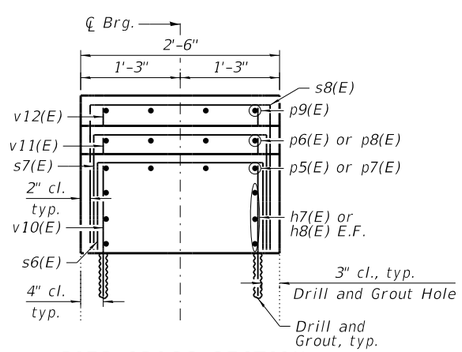

PIER CROSS SECTION

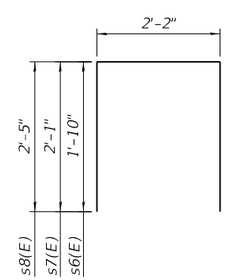

BARS s6(E), s7(E) AND s8(E)

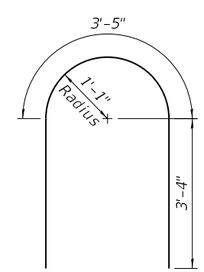

BARS h9(E)

Notes:

1. Cost of drilling and grouting reinforcing bars included in cost or Concrete Structures.
2. Bars shall be drilled and grout according to Article 584 of the Standard Specifications. Bars shall have a 9" minimum embedment depth.
3. All construction joints between new and existing concrete shall be Bonded Construction Joints.
4. The elevations shown above were calculated from the survey information provided by the district.
5. Space reinforcement in steps to miss anchor bolts.
6. Pour steps monolithically with cap.
7. See sheet S10-37 for bar splicer details.
8. Concrete Sealer shall be applied to all of the new concrete bearing steps.

PIER 1 BILL OF MATERIAL

Bar	No.	Size	Length	Shape
h7(E)	6	#5	41'-9"	
h8(E)	6	#5	45'-9"	
h9(E)	8	#5	10'-1"	
p5(E)	4	#7	41'-9"	
p6(E)	4	#7	24'-0"	
p7(E)	4	#7	45'-9"	
p8(E)	4	#7	28'-0"	
p9(E)	4	#7	6'-3"	
s6(E)	40	#5	5'-10"	
s7(E)	49	#5	6'-4"	
s8(E)	9	#5	7'-0"	
v10(E)	80	#5	2'-7"	
v11(E)	98	#5	2'-10"	
v12(E)	18	#5	3'-2"	
Concrete Structures			Cu. Yd.	20.1
Reinforcement Bars, Epoxy Coated			Pound	6,060
Concrete Sealer			Sq Ft	224

MODEL: Default
FILE NAME: pw:\\wsp-us-pw.bentley.com:wsp-us-pw-ILIDocuments\Project IDOT 2050082201 - IDOT District 1 Various\Structures\Work Order 1\016-0388 - 159th over I-94\Sheets\34_016-0388_Pier 1 Modifications.dgn

3/11/2025 12:47:53 PM

USER NAME =	DESIGNED - BJD	REVISED -	
	CHECKED - MGH	REVISED -	
PLOT SCALE =	DRAWN - GM	REVISED -	
PLOT DATE =	CHECKED - BJD	REVISED -	

STATE OF ILLINOIS
DEPARTMENT OF TRANSPORTATION

PIER 1 MODIFICATIONS
STRUCTURE NO. 016-0388

SHEET S10-34 OF S10-37 SHEETS

FAP RTE.	SECTION	COUNTY	TOTAL SHEETS	SHEET NO.
581	(42-B-11-1) BR, BJR 24	COOK	761	732

CONTRACT NO. 62W87

ILLINOIS | FED. AID PROJECT

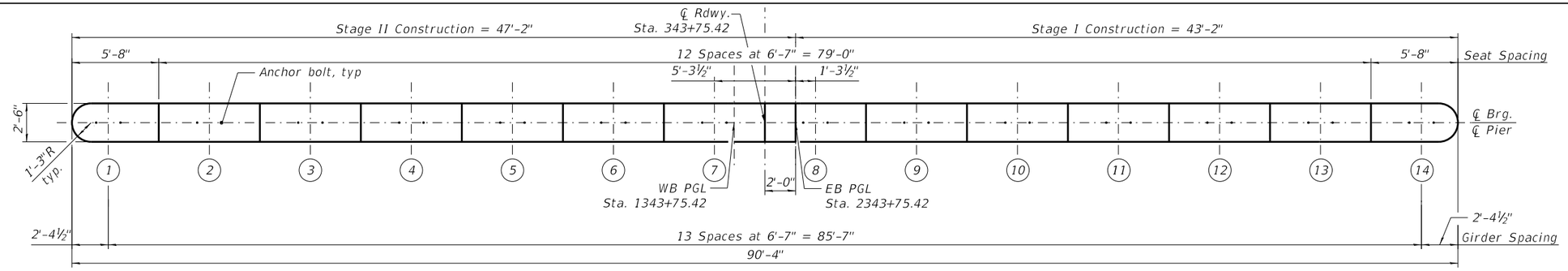

TOP PLAN

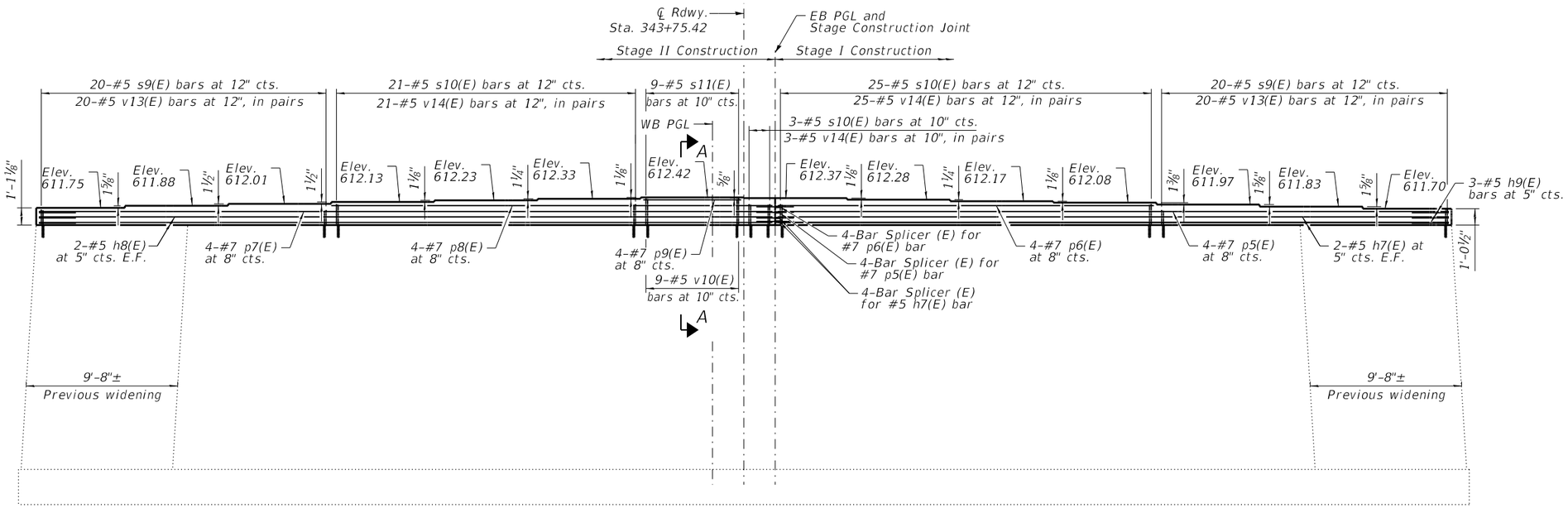

PIER 2 ELEVATION

(Looking East)

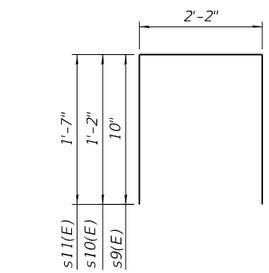

BARS s9(E), s10(E) AND s11(E)

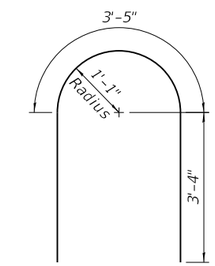

BARS h9(E)

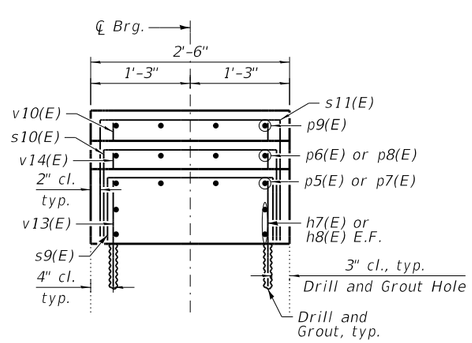

PIER CROSS SECTION

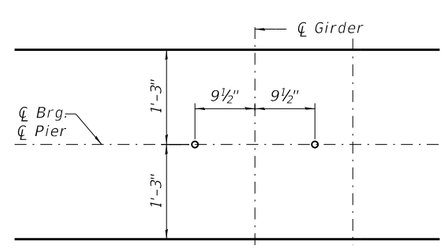

ANCHOR BOLT LAYOUT DETAIL

Notes:
1. See Sheet S10-34 for notes.
2. See Sheet S10-34 for Anchor Bolt Layout Detail.
3. See Sheet S10-37 for Bar Splicer details.

PIER 2 BILL OF MATERIAL

Bar	No.	Size	Length	Shape
h7(E)	4	#5	41'-9"	
h8(E)	4	#5	45'-9"	
h9(E)	6	#5	10'-1"	
p5(E)	4	#7	41'-9"	
p6(E)	4	#7	24'-0"	
p7(E)	4	#7	45'-9"	
p8(E)	4	#7	28'-0"	
p9(E)	4	#7	6'-3"	
s9(E)	40	#5	3'-10"	
s10(E)	49	#5	4'-6"	
s11(E)	8	#5	5'-4"	
v10(E)	80	#5	2'-7"	
v13(E)	98	#5	1'-11"	
v14(E)	16	#5	2'-3"	
Concrete Structures			Cu. Yd.	12.4
Reinforcement Bars, Epoxy Coated			Pound	5,010
Concrete Sealer			Sq Ft	224

USER NAME =	DESIGNED - BJD	REVISED -	
	CHECKED - MGH	REVISED -	
PLOT SCALE =	DRAWN - GM	REVISED -	
PLOT DATE =	CHECKED - BJD	REVISED -	

STATE OF ILLINOIS
DEPARTMENT OF TRANSPORTATION

PIER 2 MODIFICATIONS
STRUCTURE NO. 016-0388

SHEET S10-35 OF S10-37 SHEETS

FAP RTE.	SECTION	COUNTY	TOTAL SHEETS	SHEET NO.
581	(42-B-11-1) BR, BJR 24	COOK	761	733

CONTRACT NO. 62W87

ILLINOIS | FED. AID PROJECT

MODEL: Default
FILE NAME: pw:\\wsp-us-pw.bentley.com:wsp-us-pw-ILI\Documents\Project IDOT 2050082201 - IDOT District 1 Various\Structures\Work Order 1\016-0388 - 159th over I-94\Sheets\35_016-0388_Pier 2 Modifications.dgn

3/11/2025 12:47:57 PM

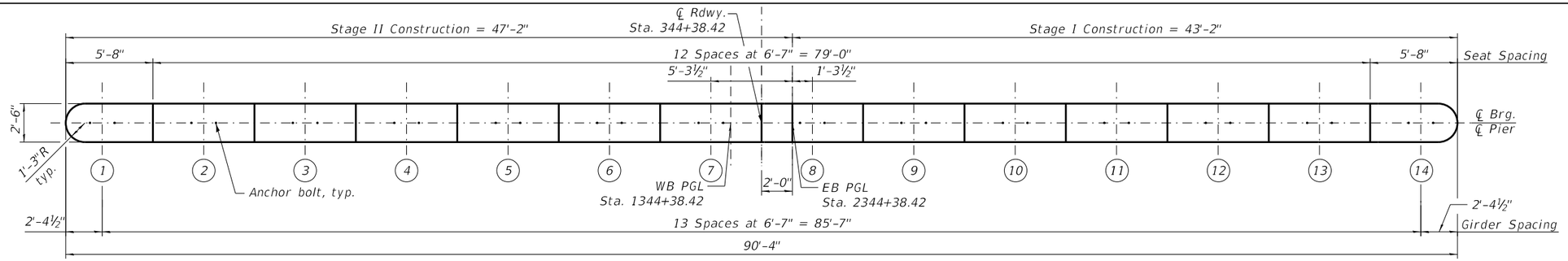

TOP PLAN

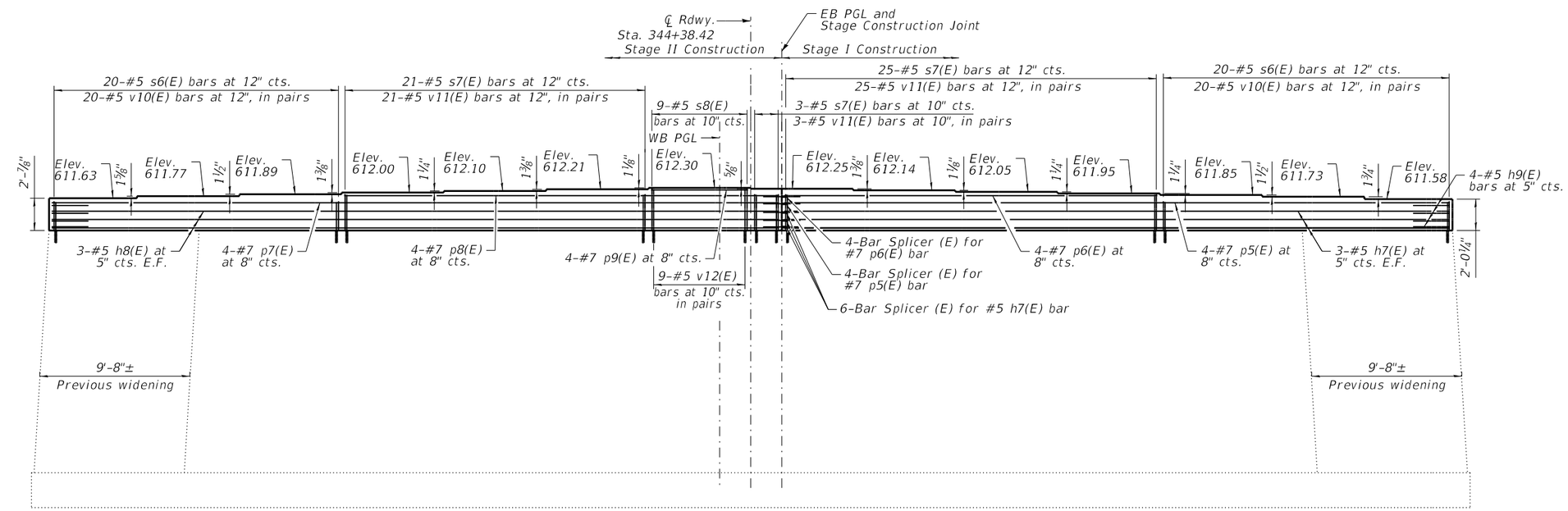

PIER 3 ELEVATION

(Looking East)

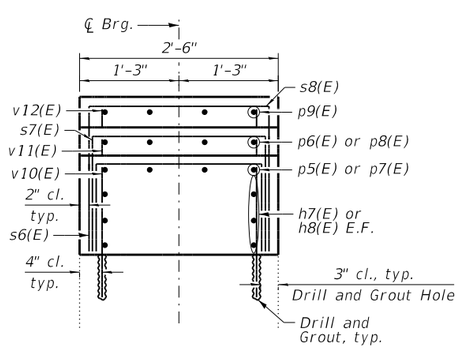

PIER CROSS SECTION

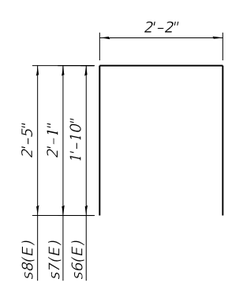

BARS s6(E), s7(E) AND s8(E)

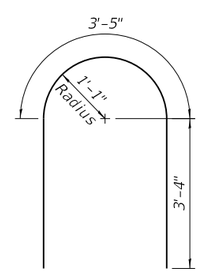

BARS h9(E)

Notes:
1. See Sheet S10-34 for notes.
2. See Sheet S10-34 for Anchor Bolt Layout Detail.
3. See Sheet S10-37 for Bar Splicer details.

PIER 3 BILL OF MATERIAL

Bar	No.	Size	Length	Shape
h7(E)	6	#5	41'-9"	
h8(E)	6	#5	45'-9"	
h9(E)	8	#5	10'-1"	
p5(E)	4	#7	41'-9"	
p6(E)	4	#7	24'-0"	
p7(E)	4	#7	45'-9"	
p8(E)	4	#7	28'-0"	
p9(E)	4	#7	6'-3"	
s6(E)	40	#5	5'-10"	
s7(E)	49	#5	6'-4"	
s8(E)	9	#5	7'-0"	
v10(E)	80	#5	2'-7"	
v11(E)	98	#5	2'-10"	
v12(E)	18	#5	3'-2"	
Concrete Structures			Cu. Yd.	20.2
Reinforcement Bars, Epoxy Coated			Pound	6,060
Concrete Sealer			Sq Ft	224

USER NAME =	DESIGNED - BJD	REVISED -	
	CHECKED - MGH	REVISED -	
PLOT SCALE =	DRAWN - GM	REVISED -	
PLOT DATE =	CHECKED - BJD	REVISED -	

STATE OF ILLINOIS
DEPARTMENT OF TRANSPORTATION

PIER 3 MODIFICATIONS
STRUCTURE NO. 016-0388

SHEET S10-36 OF S10-37 SHEETS

FAP RTE.	SECTION	COUNTY	TOTAL SHEETS	SHEET NO.
581	(42-B-11-1) BR, BJR 24	COOK	761	734

CONTRACT NO. 62W87

ILLINOIS | FED. AID PROJECT

MODEL: Default
FILE NAME: pw:\\wsp-us-pw.bentley.com:wsp-us-pw-ILI\Documents\Project IDOT 2050082201 - IDOT District 1 Various\Structures\Work Order 1\016-0388 - 159th over I-94\Sheets\36_016-0388_Pier 3 Modifications.dgn

3/11/2025 12:48:01 PM

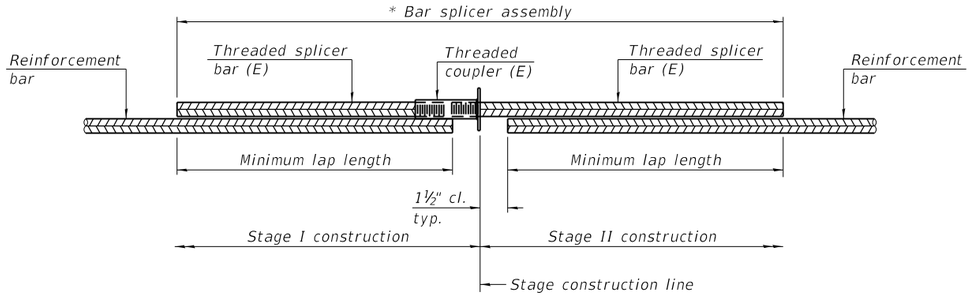

STANDARD BAR SPLICER ASSEMBLY PLAN

Only bar splicer assemblies as presented on the approved QPL list may be used.

Threaded splicer bar length = min. lap length + 1½" + thread length

* Epoxy not required on Bar Splicer Assembly components used in conjunction with black bars.

Location	Bar size	No. assemblies required	Minimum lap length
Deck	#5	684	3'-6"
Approach Slab	#5	92	3'-4"
Approach Slab	#8	120	4'-9"
Approach Footing	#5	80	3'-4"
West Abutment	#5	9	3'-4"
West Abutment	#7	8	4'-8"
East Abutment	#5	9	3'-4"
East Abutment	#7	8	4'-8"
Pier 1	#5	6	3'-4"
Pier 1	#7	8	4'-8"
Pier 2	#5	4	3'-4"
Pier 2	#7	8	4'-8"
Pier 3	#5	6	3'-4"
Pier 3	#7	8	4'-8"

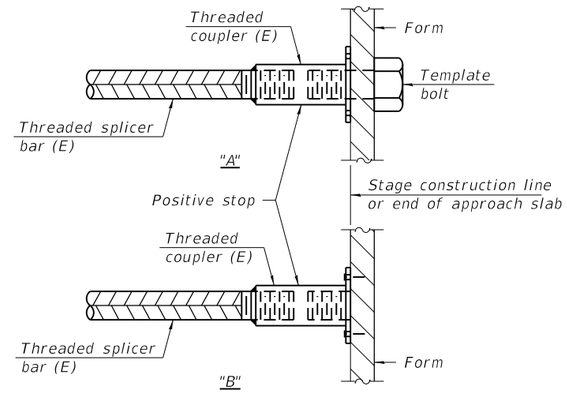

INSTALLATION AND SETTING METHODS

"A" : Set bar splicer assembly by means of a template bolt.
"B" : Set bar splicer assembly by nailing to wood forms or cementing to steel forms.
(E) : Indicates epoxy coating.

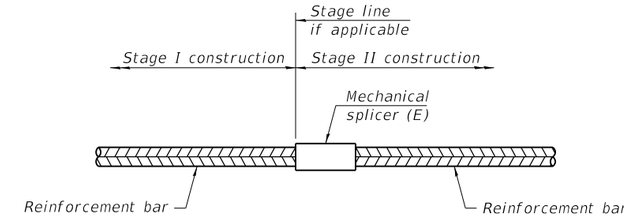

STANDARD MECHANICAL SPLICER

Location	Bar size	No. assemblies required

Notes:
Splicer bars shall be deformed with threaded ends and have a minimum 60 ksi yield strength.
All reinforcement shall be lapped and tied to the splicer bars.
Bar splicer assemblies shall be epoxy coated according to the requirements for reinforcement bars. See Section 508 of the Standard Specifications.
See approved list of bar splicer assemblies and mechanical splicers for alternatives.

BSD-1 5-15-2023

USER NAME =	DESIGNED - BJD	REVISED -	STATE OF ILLINOIS DEPARTMENT OF TRANSPORTATION
	CHECKED - MGH	REVISED -	
PLOT SCALE =	DRAWN - GM	REVISED -	
PLOT DATE =	CHECKED - BJD	REVISED -	

BAR SPLICER ASSEMBLY AND MECHANICAL SPLICER DETAILS
STRUCTURE NO. 016-0388
SHEET S10-37 OF S10-37 SHEETS

FAP RTE.	SECTION	COUNTY	TOTAL SHEETS	SHEET NO.
581	(42-B-11-1) BR, BJR 24	COOK	761	735
		CONTRACT NO. 62W87		
	ILLINOIS	FED. AID PROJECT		

METHOD OF MEASUREMENT

REFER TO SECTION 442 OF THE STANDARD SPECIFICATIONS FOR ROAD AND BRIDGE CONSTRUCTION AND THE RECURRING SPECIAL PROVISION "PATCHING WITH HOT-MIX ASPHALT OVERLAY REMOVAL."

BASIS OF PAYMENT

1. REFER TO SECTION 442 OF THE STANDARD SPECIFICATIONS FOR ROAD AND BRIDGE CONSTRUCTION AND THE RECURRING SPECIAL PROVISION "PATCHING WITH HOT-MIX ASPHALT OVERLAY REMOVAL."
2. SAW CUT/SCORING OF EXISTING HMA OVERLAY IS INCLUDED IN THE COST OF PAVEMENT PATCHING.
3. SAW CUT/SCORING OF EXISTING PAVEMENT IS INCLUDED IN THE COST OF PAVEMENT PATCHING.

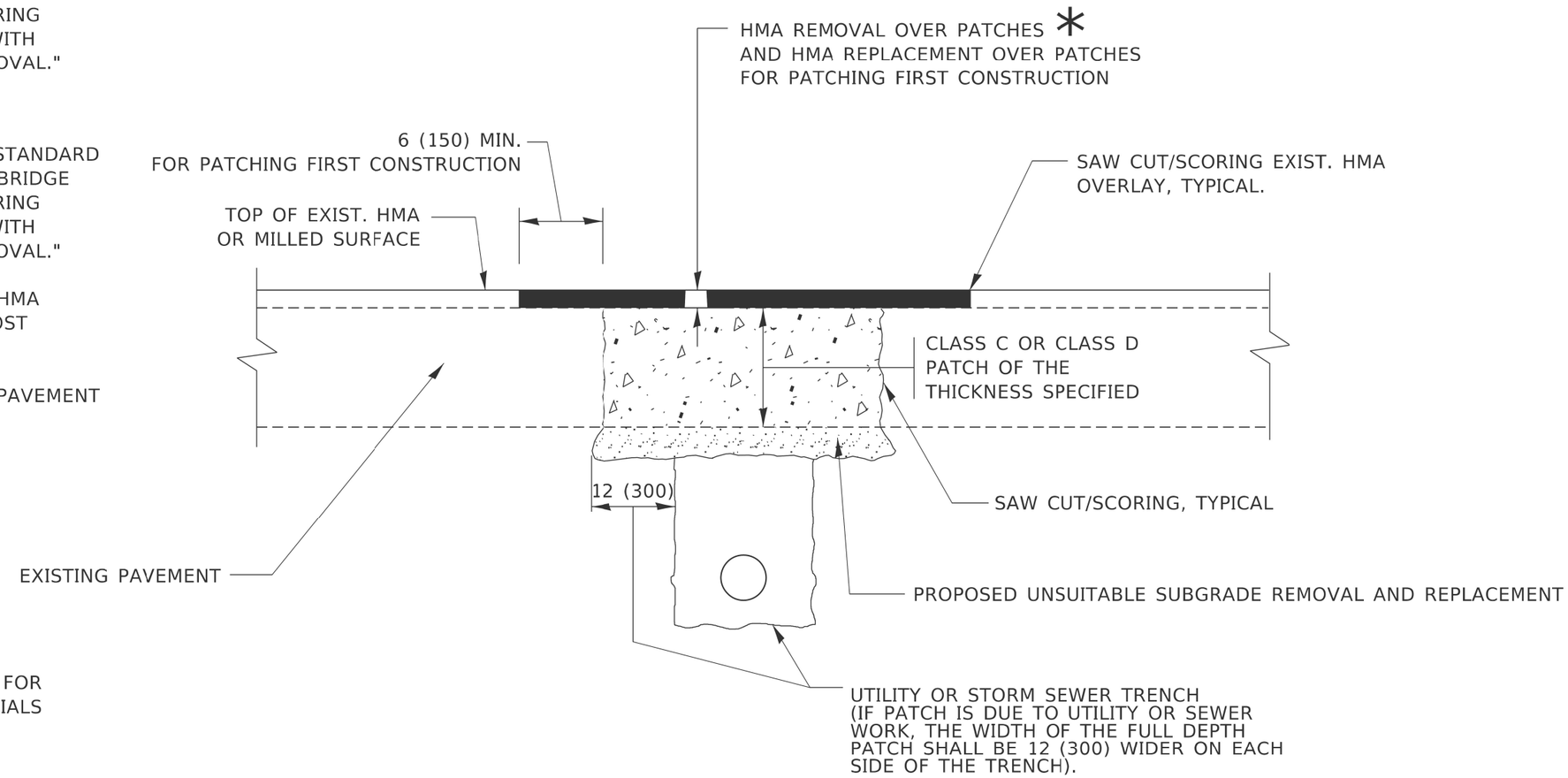

* SEE TYPICAL SECTIONS FOR THICKNESS AND MATERIALS

SEQUENCE OF CONSTRUCTION (PATCHING FIRST)

1. REMOVE THE EXISTING HMA MATERIAL OVER THE AREA TO BE PATCHED.
2. REMOVE AND REPLACE WITH CLASS C OR D PATCH.
3. REPLACE HMA MATERIAL OVER THE AREA TO BE PATCHED.

SEQUENCE OF CONSTRUCTION (MILLING FIRST)

1. MILL HMA FIRST IF THERE IS AT LEAST 4½ INCHES OR MORE OF HMA MATERIAL ON TOP OF THE EXISTING PAVEMENT OR IF THE PAVEMENT IS FULL DEPTH HMA. A MINIMUM OF 2 INCHES OF HMA MATERIAL SHALL BE IN PLACE AFTER MILLING.
2. REMOVE AND REPLACE WITH FULL DEPTH CLASS D PATCHES TO TOP OF MILLED SURFACE.

ALL DIMENSIONS ARE IN INCHES (MILLIMETERS) UNLESS OTHERWISE SHOWN.

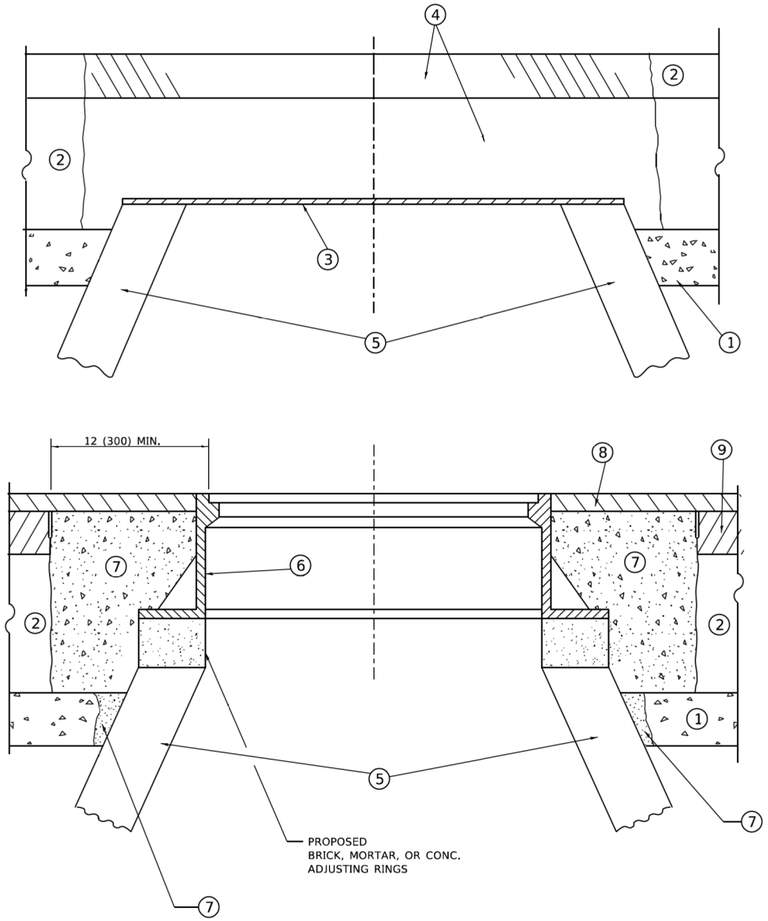

DETAILS FOR FRAMES AND LIDS ADJUSTMENT WITH MILLING

NOTES

1. EXISTING BROKEN FRAMES AND LIDS SHALL BE REMOVED AND DISPOSED OF BY THE CONTRACTOR AND SHALL BE REPLACED AS DIRECTED BY THE ENGINEER. REPLACEMENT FRAMES AND LIDS WILL BE PAID FOR IN ACCORDANCE WITH ARTICLE 109.04 OF THE STANDARD SPECIFICATIONS UNLESS A SEPARATE PAY ITEM HAS BEEN PROVIDED.
2. IF THE EXISTING LIDS ARE OPEN, THE FRAME WILL BE ADJUSTED TO THE ELEVATION OF THE MILLED PAVEMENT SURFACE PRIOR TO THE MILLING OPERATION. THE FRAME WILL NOT BE REMOVED AND COVERED BY THE METAL PLATE.
3. CITY OF CHICAGO CASTINGS ARE THE PROPERTY OF THE CITY AND THE CONTRACTOR SHALL NOTIFY THE CITY FOR REMOVAL AND DISPOSITION OF THE CASTINGS.
4. THE METAL PLATE USED TO COVER THE STRUCTURE SHALL REMAIN THE PROPERTY OF THE CONTRACTOR.
5. THE CONTRACTOR SHALL REMOVE ALL TRAFFIC CONTROL DEVICES BY THE END OF EACH WORK SHIFT.

CONSTRUCTION PROCEDURES

STAGE 1 (BEFORE PAVEMENT MILLING)

A) REMOVE A MINIMUM OF 12 (300) OF THE PAVEMENT FROM AROUND THE STRUCTURE.

B) REMOVE THE EXISTING FRAME AND LID FROM THE STRUCTURE.

C) COVER THE STRUCTURE OPENING WITH A 36 (900) DIAMETER METAL PLATE.

D) BACKFILL WITH CRUSHED STONE AND HMA SURFACE MIX APPROVED BY THE ENGINEER. (MIN. 3 (80) HMA TO REMAIN AFTER MILLING).

STAGE 2 (AFTER PAVEMENT MILLING)

A) REMOVE THE HMA SURFACE MIX AND CRUSHED STONE.

B) INSTALL THE FRAME AND LID; ADJUST THE FRAME TO ITS FINAL SURFACE ELEVATION.

C) THE SURROUNDING SPACE SHALL BE FILLED WITH CLASS PP-2* CONCRETE TO THE ELEVATION OF THE SURFACE OF THE EXISTING BASE COURSE OR THE BINDER COURSE.

*UNLESS OTHERWISE SPECIFIED IN THE PLANS.

THE PROCEDURE EXPLAINED ABOVE SHALL CONFORM TO THE APPLICABLE PORTIONS OF SECTIONS 353, 406, 602, AND 603 OF THE STANDARD SPECIFICATIONS EXCEPT THAT "THE CONTRACTOR SHALL ADJUST THE STRUCTURES TO THE FINISHED PAVEMENT ELEVATION NO MORE THAN 5 CALENDAR DAYS PRIOR TO PLACEMENT OF THE FINAL LIFT OF SURFACE UNLESS APPROVED BY THE ENGINEER."

LEGEND

1. SUB-BASE GRANULAR MATERIAL
2. EXISTING PAVEMENT
3. 36 (900) DIAMETER METAL PLATE
4. PROPOSED CRUSHED STONE AND HMA SURFACE MIX
5. EXISTING STRUCTURE
6. FRAME AND LID (SEE NOTES)
7. CLASS PP-2* CONCRETE
8. PROPOSED HMA SURFACE COURSE
9. PROPOSED HMA BINDER COURSE

LOCATION OF STRUCTURES

THE CONTRACTOR WILL BE REQUIRED TO KEEP A RECORD OF THE LOCATIONS OF THE BURIED STRUCTURES ACCORDING TO THE STATION AND DISTANCE LEFT OR RIGHT OF THE CENTERLINE OF PAVEMENT. UPON COMPLETION OF THE WORK, THE CONTRACTOR WILL DELIVER THE RECORD TO THE ENGINEER.

BASIS OF PAYMENT

1. REMOVING FRAMES AND LIDS ON DRAINAGE AND UTILITY STRUCTURES IN THE PAVEMENT PRIOR TO MILLING, AND ADJUSTING TO FINAL GRADE PRIOR TO PLACING THE SURFACE COURSE, WILL BE PAID FOR AT THE CONTRACT UNIT PRICE EACH FOR "FRAMES AND LIDS TO BE ADJUSTED (SPECIAL)."
2. THIS WORK WILL NOT BE PAID FOR WHEN DRAINAGE AND UTILITY STRUCTURES ARE SPECIFIED FOR PAYMENT AS STRUCTURE RECONSTRUCTION.
3. NEW FRAMES AND LIDS, WHEN SPECIFIED, WILL BE PAID FOR SEPARATELY.
4. WHEN STRUCTURES ARE TO BE ADJUSTED OR RECONSTRUCTED, THE LOWERING AND RAISING OF THE FRAMES AND LIDS WILL NOT BE PAID FOR SEPARATELY BUT WILL BE INCLUDED IN THE COST OF THE CORRESPONDING PAY ITEM.

ALL DIMENSIONS ARE IN INCHES (MILLIMETERS) UNLESS OTHERWISE SHOWN

MODEL: Default
FILE NAME: W:\dist\std\22x34\bd08.dgn

USER NAME = Lawrence.DeManche	DESIGNED - R. SHAH	REVISED - R. BORO 03-09-11	STATE OF ILLINOIS DEPARTMENT OF TRANSPORTATION
	DRAWN -	REVISED - R. BORO 12-06-11	
PLOT SCALE = 100.0000 ' / in.	CHECKED -	REVISED - K. SMITH 11-18-22	
PLOT DATE = 9/15/2023	DATE - 10-25-94	REVISED - K. SMITH 09-15-23	

DETAILS FOR FRAMES AND LIDS ADJUSTMENT WITH MILLING

SCALE: NONE | SHEET 1 OF 1 SHEETS | STA. TO STA.

F.AL RTE.	SECTION	COUNTY	TOTAL SHEETS	SHEET NO.
94	(42-B-11-1) BR, BJR 24	COOK	761	736
BD600-03 (BD-08)		CONTRACT NO. 62W87		
		ILLINOIS FED. AID PROJECT		

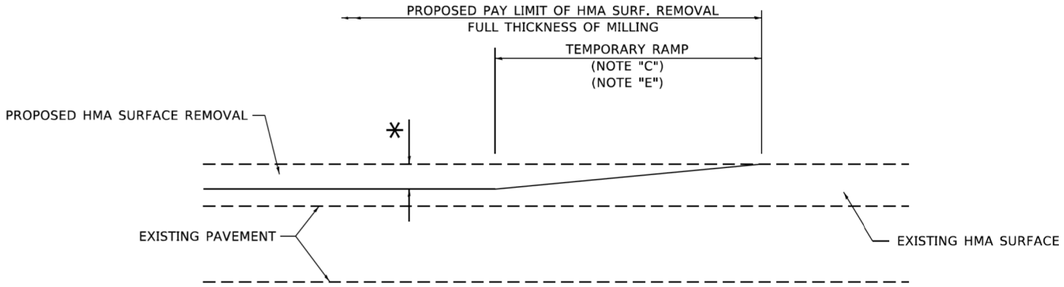

MILLED TEMPORARY RAMP

(FOR BUTT JOINT AND HMA TAPER SEE DETAIL BELOW)

OPTION 1

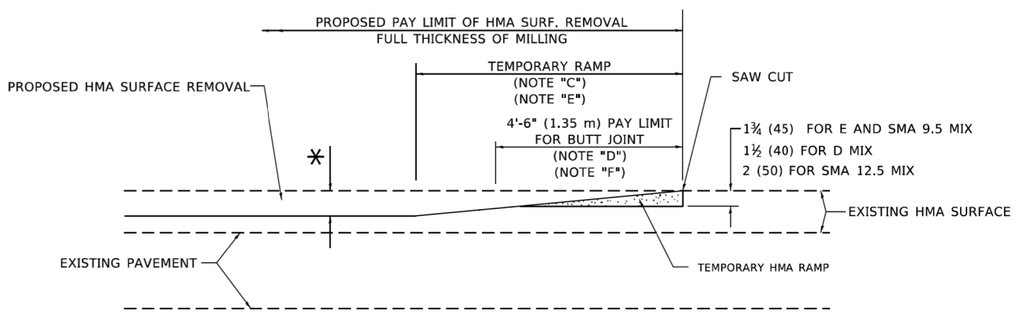

HMA CONSTRUCTED TEMPORARY RAMP

(FOR BUTT JOINT AND HMA TAPER SEE DETAIL BELOW)

OPTION 2

TYPICAL TEMPORARY RAMP

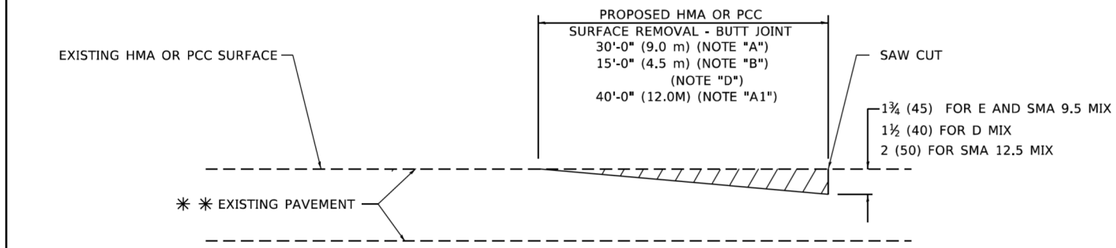

BUTT JOINT DETAIL

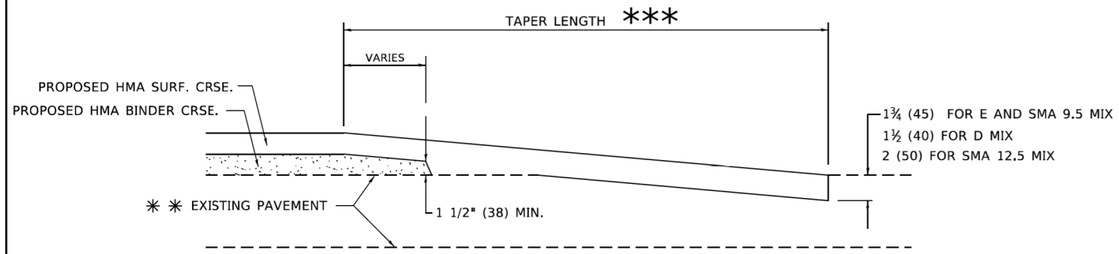

HMA TAPER DETAIL

TYPICAL BUTT JOINT AND HMA TAPER FOR RESURFACING ONLY

** PC CONCRETE, HMA OR HMA RESURFACED PAVEMENT.

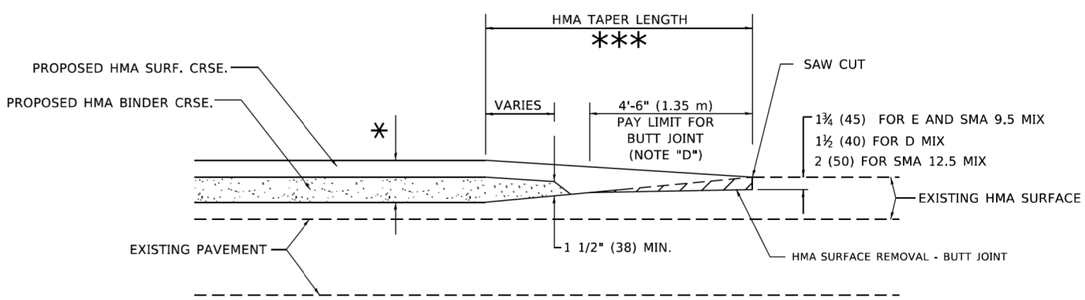

BUTT JOINT AND HMA TAPER

TYPICAL BUTT JOINT AND HMA TAPER FOR MILLING AND RESURFACING

GENERAL NOTES

A. MAINLINE ARTERIAL ROADWAYS AND MAJOR SIDE ROADS.

A1. INTERSTATES

B. MINOR SIDE ROADS.

C. THE TEMP. RAMP SHALL BE CONSTRUCTED IMMEDIATELY UPON REMOVAL OF THE EXISTING HMA SURFACE.

D. THE BUTT JOINT SHALL BE CONSTRUCTED IMMEDIATELY PRIOR TO PLACING THE PROPOSED HMA COURSES.

E. TAPER THE TEMP. RAMP AT A RATE OF 3' - 4" (1.02m) PER 1 INCH (25 mm) OF MILLING THICKNESS.

* SEE TYPICAL SECTIONS FOR MILLING THICKNESS.

F. SEE ARTICLE 406.08 AND 406.14 OF THE STANDARD SPECIFICATIONS FOR "HMA AND/OR PCC SURFACE REMOVAL, BUTT JOINT".

*** 20'-0" (6.1 m) PER 1 (25) RESURFACING (NOTE "A")
10'-0" (3.0 m) PER 1 (25) RESURFACING (NOTE "B")

BASIS OF PAYMENT

1. THE BUTT JOINT WILL BE PAID FOR AT THE CONTRACT UNIT PRICE PER SQUARE YARD (SQUARE METER) FOR "HOT-MIX ASPHALT SURFACE REMOVAL - BUTT JOINT" OR FOR "PORTLAND CEMENT CONCRETE SURFACE REMOVAL- BUTT JOINT".
2. THE TEMPORARY RAMP AND SAW CUT SHALL BE INCLUDED IN THE UNIT COST FOR HMA OR PCC SURFACE REMOVAL-BUTT JOINT.

ALL DIMENSIONS ARE IN INCHES (MILLIMETERS) UNLESS OTHERWISE SHOWN.

MODEL: Default
FILE NAME: pw:\\ildot-pw.bentley.com:PWIDOT\Documents\IDOT Offices\District 1\Projects\DistStd22x34\CADData\CADsheets\bd32.dgn

USER NAME = Lawrence.DeManche	DESIGNED - M. DE YONG	REVISED - A. ABBAS 03-21-97	STATE OF ILLINOIS DEPARTMENT OF TRANSPORTATION
	DRAWN -	REVISED - M. GOMEZ 04-06-01	
PLOT SCALE = 100.0000 ' / in.	CHECKED -	REVISED - R. BORO 01-01-07	
PLOT DATE = 11/18/2022	DATE - 06-13-90	REVISED - K. SMITH 11-18-22	

BUTT JOINT AND HMA TAPER DETAILS

SCALE: NONE | SHEET 1 OF 1 SHEETS | STA. TO STA.

F.A.I. RTE.	SECTION	COUNTY	TOTAL SHEETS	SHEET NO.
94	(42-B-11-1) BR, BJR 24	COOK	761	737
BD400-05 BD-32		CONTRACT NO. 62W87		
		ILLINOIS FED. AID PROJECT		

LIGHT POLE FOUNDATION DEPTH TABLE
30 FT. (9.144 m) TO 35 FT. (10.668 m) MOUNTING HEIGHT

SOIL CONDITIONS	DESIGN DEPTH "D" OF FOUNDATION	
	SINGLE ARM POLE	TWIN ARM POLE
SOFT CLAY Qu = 0.375 TON/SQ. FT.	11'-0" (3.35 m)	12'-8" (3.85 m)
MEDIUM CLAY Qu = 0.75 TON/SQ.FT	9'-0" (2.74 m)	14'-10" (4.52 m)
STIFF CLAY Qu = 1.50 TON/SQ. FT.	7'-6" (2.29 m)	8'-7" (2.61 m)
LOOSE SAND ∅ = 34°	9'-6" (2.90 m)	10'-7" (3.22 m)
MEDIUM SAND ∅ = 37.5°	9'-0" (2.74 m)	9'-10" (2.99 m)
DENSE SAND ∅ = 40°	8'-3" (2.51 m)	9'-7" (2.91 m)

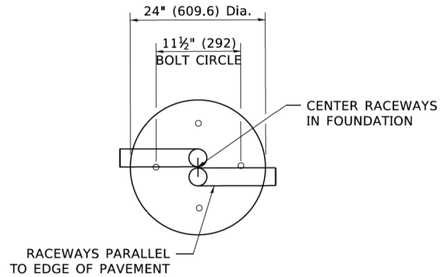

TOP VIEW

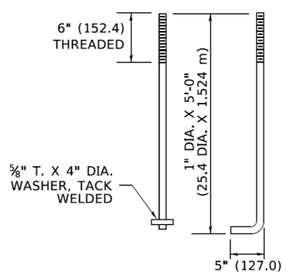

ANCHOR BOLT DETAIL

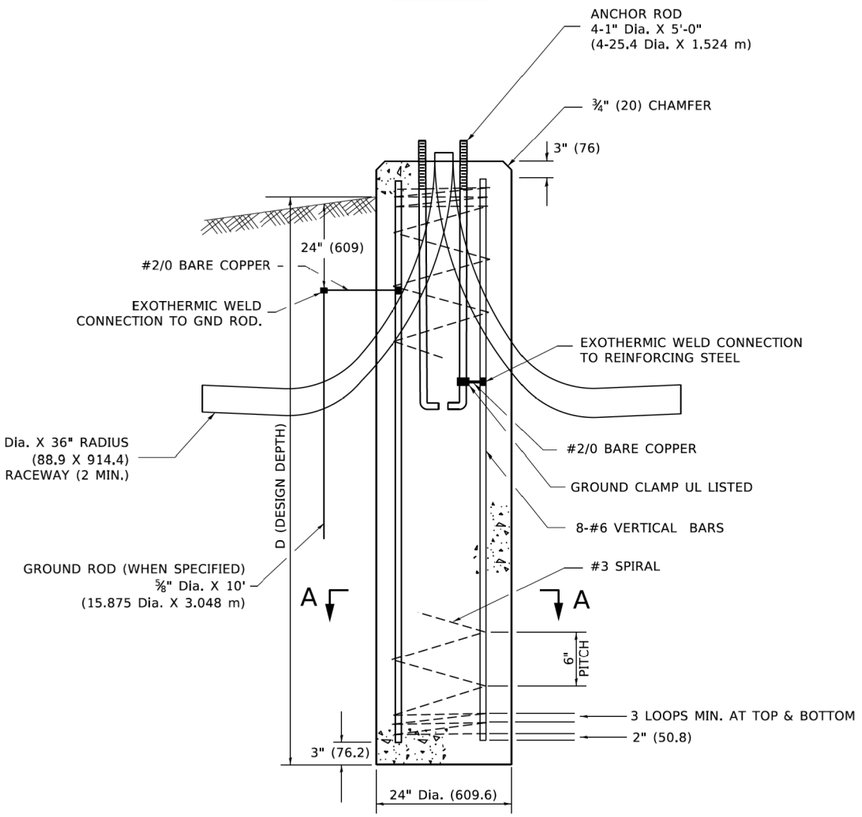

FOUNDATION DETAIL

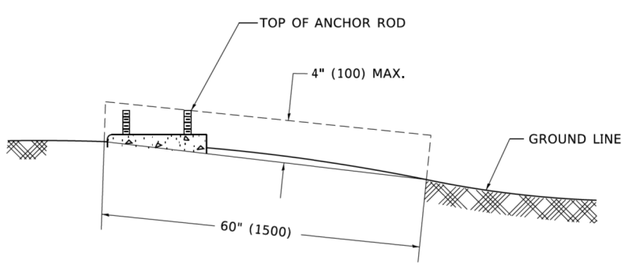

FOUNDATION EXTENSION DETAIL

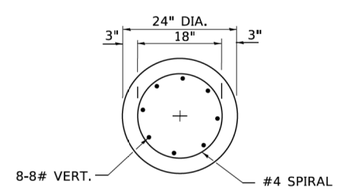

SECTION A–A

NOTES

1. ALL DIMENSIONS ARE IN INCHES (MILLIMETERS) UNLESS OTHERWISE SHOWN.
2. THE ANCHOR RODS AND RACEWAYS SHALL BE PROPERLY SECURED IN PLACE BEFORE THE CONCRETE IN PLACED.
3. THE FOUNDATION SHALL NOT PROTRUDE MORE THAN 4 IN. (100 mm) ABOVE THE FINISHED GRADE WITHIN A 60 IN. (1.5 m) CHORD ACROSS THE FOUNDATION, WITH ANCHOR RODS INCLUDED, IN ACCORDANCE WITH AASHTO GUIDELINES. IF THE FOUNDATION HEIGHT, INCLUDING ANCHOR RODS, EXTENDS BEYOND THESE SPECIFIED LIMITS, THE FOUNDATION SHALL BE REPLACED AT THE CONTRACTOR'S EXPENSE. SEE FOUNDATION EXTENSION DETAIL.
4. THE HOLE FOR THE FOUNDATION SHALL BE MADE BY DRILLING WITH AN AUGER, OF THE SAME DIAMETER AS THE FOUNDATION. IF SOIL CONDITIONS REQUIRE THE USE OF A LINER TO FORM THE HOLE, THE LINER SHALL BE WITHDRAWN AS THE CONCRETE IS DEPOSITED.
5. THE TOP OF THE FOUNDATION SHALL BE CONSTRUCTED LEVEL. A LINER OR FORM SHALL BE USED TO PRODUCE A UNIFORM SMOOTH SIDE TO THE TOP OF THE FOUNDATION. FOUNDATION TOP SHALL BE CHAMFERED 3#4-IN. (20 mm).
6. THE CONCRETE SHALL BE CLASS SI. CONCRETE SHALL CURE ACCORDING TO ARTICLE 1020.13 BEFORE LIGHT POLES ARE INSTALLED.
7. THE ANCHOR ROD SHALL BE A HOOK ROD TYPE. COLD BENDING OF THE ANCHOR ROD WILL NOT BE ALLOWED. THE RADIUS OF THE HOOK BEND SHALL NOT BE LESS THAN 4 TIMES THE NOMINAL DIAMETER OF THE ANCHOR ROD. A TACK WELDED ANCHOR ROD MAY BE SUBSTITUTED WITH THE APPROVAL OF THE ENGINEER.
8. ANCHOR RODS, NUTS AND WASHERS SHALL BE COMPLETELY GALVANIZED BY EITHER THE HOT-DIPPED PROCESS CONFORMING WITH AASHTO M 232, THE MECHANICAL PLATING METHOD CONFORMING TO AASHTO M 298, CLASS 50 WITH A MAXIMUM COATING THICKNESS OF 150 UM(6 MILS) OR THE ELECTROLYTIC PROCESS ACCORDING TO ASTM F 1136.
9. THE ANCHOR RODS SHALL BE THREADED A MINIMUM OF 6 INCHES (150 mm) WITH A MINIMUM OF 3 INCHES (75 mm) OF THREADED ANCHOR ROD EMBEDDED IN THE FOUNDATION.
10. ANCHOR RODS SHALL PROJECT 23#4" (69.9 mm) ABOVE THE TOP OF THE FOUNDATION. IF BREAKAWAY COUPLINGS ARE SPECIFIED, THE CONTRACTOR SHALL CAREFULLY COORDINATE THE ANCHOR ROD PROJECTION WITH THE INSTALLATION REQUIREMENTS OF THE BREAKAWAY COUPLINGS.
11. THE CONTRACTOR SHALL USE A #3 SPIRAL AT 6" (152.4 mm) PITCH OR MAY SUBSTITUTE #3 TIES AT 12" (304.8 mm) O.C. WITH THE APPROVAL OF THE ENGINEER.
12. THE CABLE TRENCHES AND FOUNDATION SHALL BE BACK FILLED AND COMPACTED AS SPECIFIED BEFORE THE LIGHT POLE IS ERECTED.
13 THE RACEWAYS SHALL PROJECT 1" (25.4 mm) ABOVE THE TOP OF THE FOUNDATION.

MODEL: Default
FILE NAME: pw:\\planroom.dot.illinois.gov:PWIDOT\Documents\IDOT Offices\District 1\Projects\DistStd22x34\CADData\CADsheets\be300.dgn

USER NAME = footemj	DESIGNED -	REVISED -	
	DRAWN -	REVISED -	
PLOT SCALE = 50.0000 ' / in.	CHECKED -	REVISED -	
PLOT DATE = 4/19/2019	DATE -	REVISED -	

STATE OF ILLINOIS
DEPARTMENT OF TRANSPORTATION

LIGHT POLE FOUNDATION
30' (9.144 m) TO 35' (10.668 m) M.H. 11 1/2" (292 mm) BOLT CIRCLE

SCALE: NONE | SHEET 1 OF 1 SHEETS | STA. TO STA.

F.A.I. RTE.	SECTION	COUNTY	TOTAL SHEETS	SHEET NO.
94	(42-B-11-1) BR, BJR 24	COOK	761	738
	BE-300	CONTRACT NO.		
	ILLINOIS	FED. AID PROJECT		

be300.dgn 4/19/2019 2:16:45 PM User=footemj

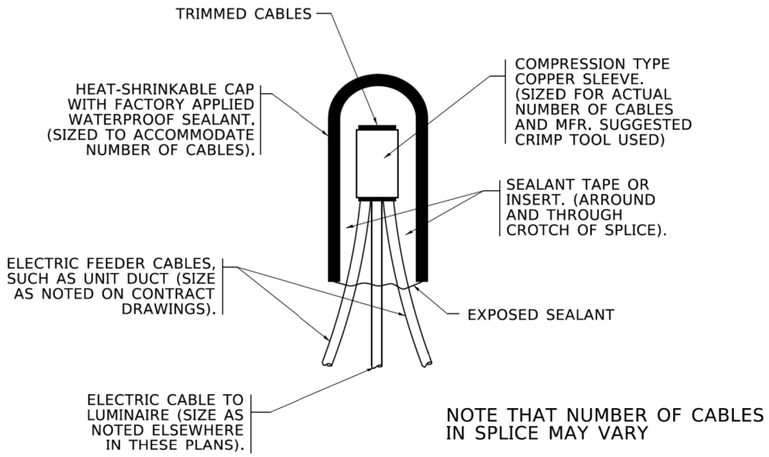

TYPICAL SPLICE DETAIL

N.T.S.

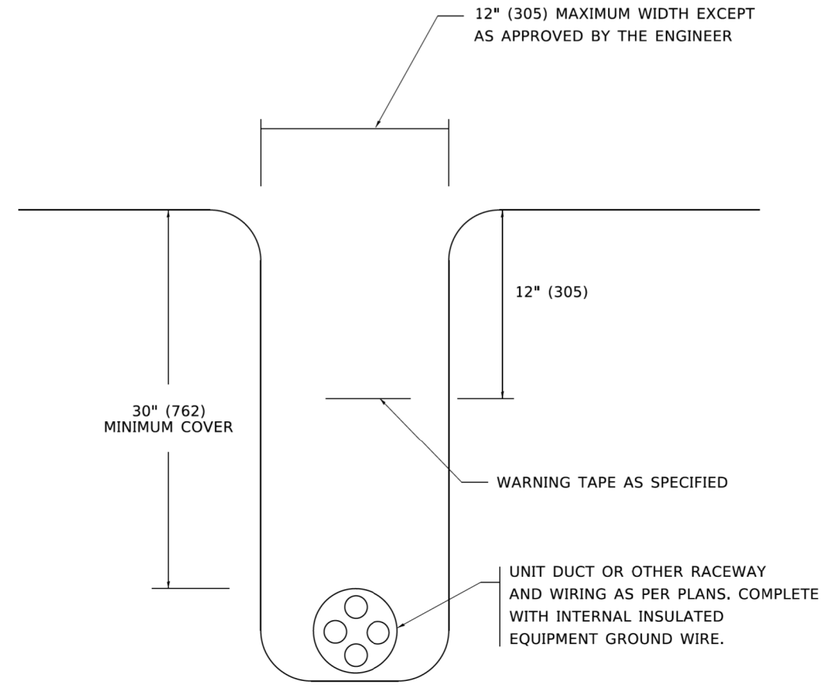

TYPICAL WIRING IN TRENCH DETAIL

N.T.S.

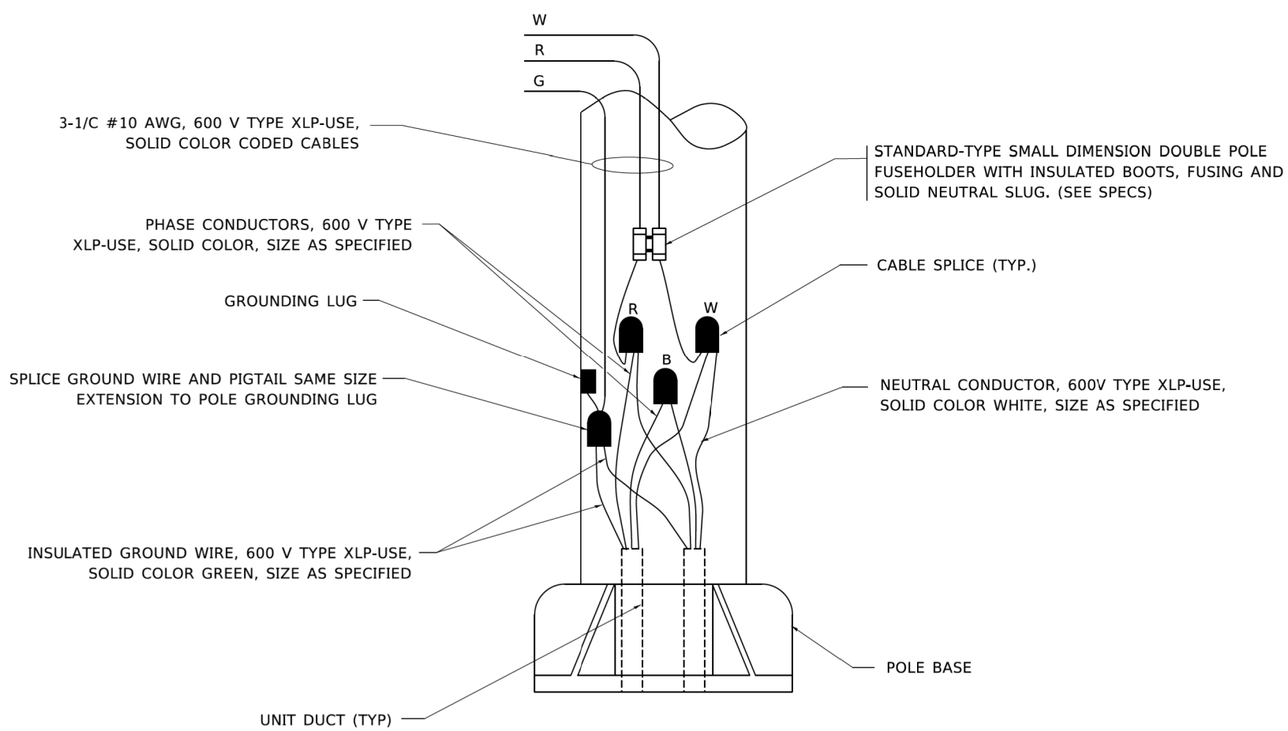

POLE WIRING DETAIL

N.T.S.

MODEL: Default
FILE NAME: pw:\\planroom.dot.illinois.gov:PWIDOT\Documents\IDOT Offices\District 1\Projects\DistStd22x34\CADData\CADsheets\be702.dgn

USER NAME = leysa	DESIGNED -	REVISED - 02/04/2020	STATE OF ILLINOIS DEPARTMENT OF TRANSPORTATION	MISC. ELECTRICAL DETAILS SHEET A	F.A.I. RTE.	SECTION	COUNTY	TOTAL SHEETS	SHEET NO.
	DRAWN -	REVISED -			94	(42-B-11-1) BR, BJR 24	COOK	761	739
PLOT SCALE = 50.0000 ' / in.	CHECKED -	REVISED -			BE-702		CONTRACT NO. 62W87		
PLOT DATE = 3/2/2020	DATE - 08/08/2003	REVISED -		SCALE: NONE / SHEET 1 OF 1 SHEETS / STA. TO STA.	ILLINOIS	FED. AID PROJECT			

be702.dgn 3/2/2020 7:37:37 AM User=leysa

NOTES

1. CONDUIT SHALL BE 4-INCH DIAMETER UNLESS OTHERWISE INDICATED IN THE PLANS.
2. JUNCTION BOX SIZE:
   SINGLE FACE WALL: 21" X 11" X 8"
   DOUBLE FACE WALL: 20" X 13" X 12"

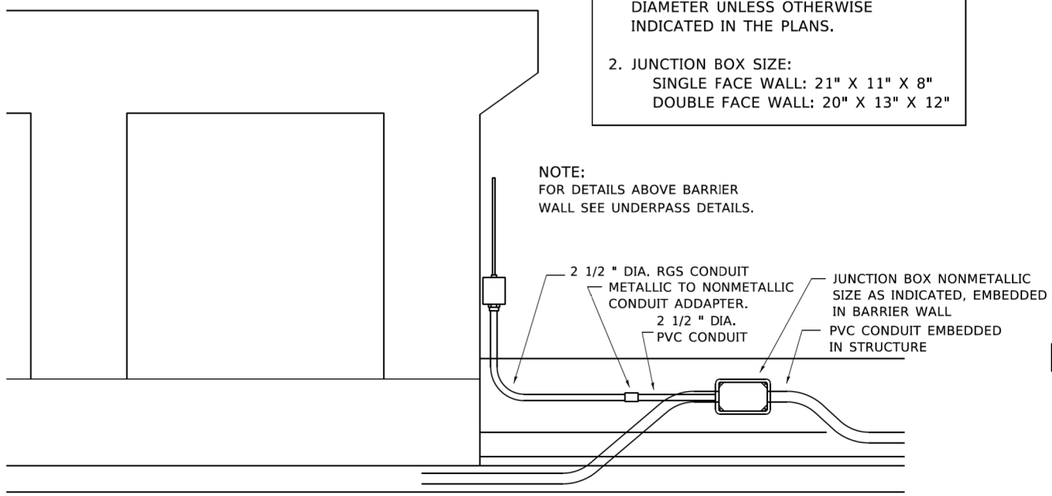

ED - BWD

ELECTRIC CONNECTION TO UNDERPASS LIGHTING

NOTES

1. CONDUIT SHALL BE 4-INCH DIAMETER UNLESS OTHERWISE INDICATED IN THE PLANS.
2. JUNCTION BOX SIZE:
   SINGLE FACE WALL: 21" X 11" X 8"
   DOUBLE FACE WALL: 20" X 13" X 12"

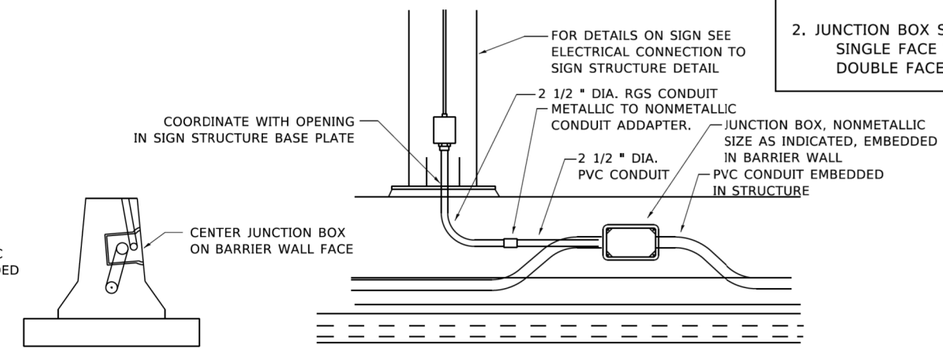

ED - SGN

JUNCTION BOX EMBEDDED IN BARRIER WALL FOR SIGN LIGHTING

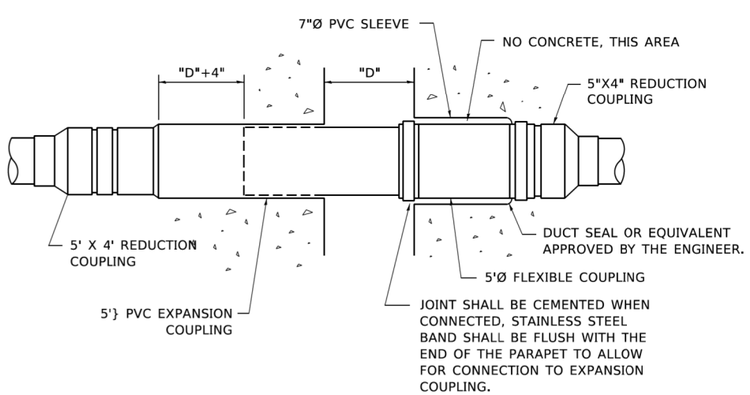

INSTALLATION OF CONDUIT IN BRIDGE PARAPET EXPANSION JOINT

(N.T.S.)

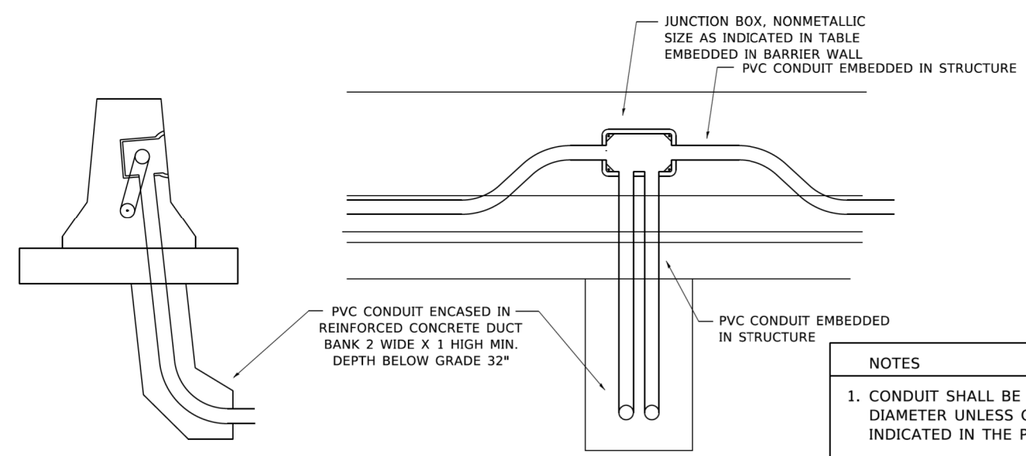

NOTES

1. CONDUIT SHALL BE 4-INCH DIAMETER UNLESS OTHERWISE INDICATED IN THE PLANS.
2. JUNCTION BOX SIZE:
   SINGLE FACE WALL: 21" X 11" X 8"
   DOUBLE FACE WALL: 20" X 13" X 12"

ED - BW

JUNCTION BOX EMBEDDED IN BARRIER WALL

MODEL: Default
FILE NAME: pw:\\planroom.dot.illinois.gov:PWIDOT\Documents\IDOT Offices\District 1\Projects\DistStd22x34\CADData\CADsheets\be703.dgn

USER NAME = footemj	DESIGNED -	REVISED -	
	DRAWN -	REVISED -	
PLOT SCALE = 50.0000 ' / in.	CHECKED -	REVISED -	
PLOT DATE = 4/19/2019	DATE - 01-20-2009	REVISED -	

STATE OF ILLINOIS
DEPARTMENT OF TRANSPORTATION

MISCELLANEOUS ELECTRICAL DETAILS, SHEET B
J BOX EMBEDDED IN BARRIER WALL – INSTALLATION OF CONDUIT IN BRIDGE PARAPET EXPANSION JOINT – ELECTRIC CONNECTION TO UNDERPASS LIGHTING

SCALE: NONE | SHEET 1 OF 1 SHEETS | STA. TO STA.

F.A.I. RTE.	SECTION	COUNTY	TOTAL SHEETS	SHEET NO.
94	(42-B-11-1) BR, BJR 24	COOK	761	740
	BE-703	CONTRACT NO. 62W87		
	ILLINOIS	FED. AID PROJECT		

be703.dgn 4/19/2019 3:22:59 PM User=footemj

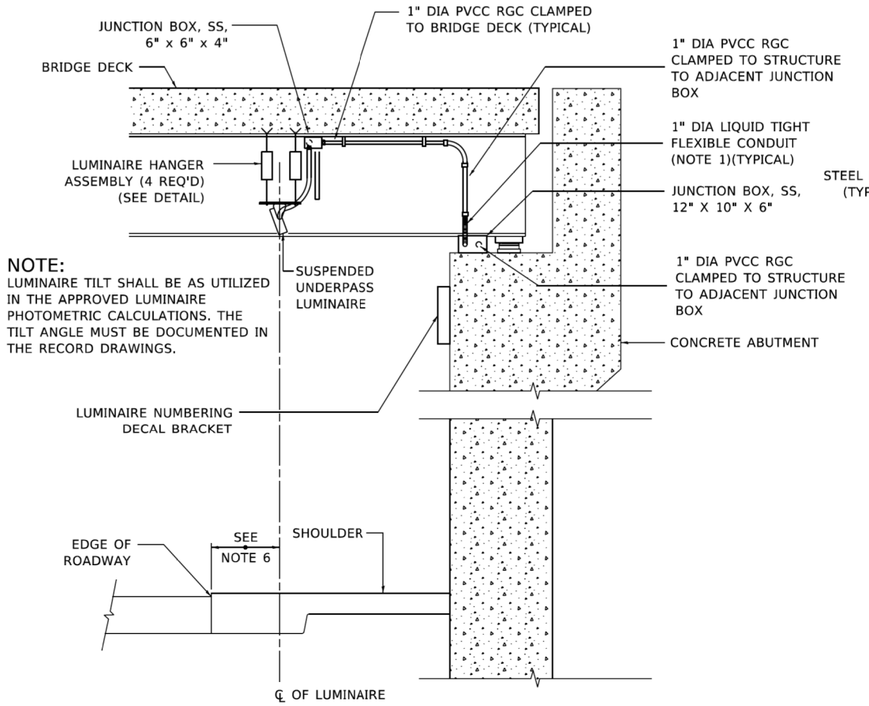

NOTE:
LUMINAIRE TILT SHALL BE AS UTILIZED IN THE APPROVED LUMINAIRE PHOTOMETRIC CALCULATIONS. THE TILT ANGLE MUST BE DOCUMENTED IN THE RECORD DRAWINGS.

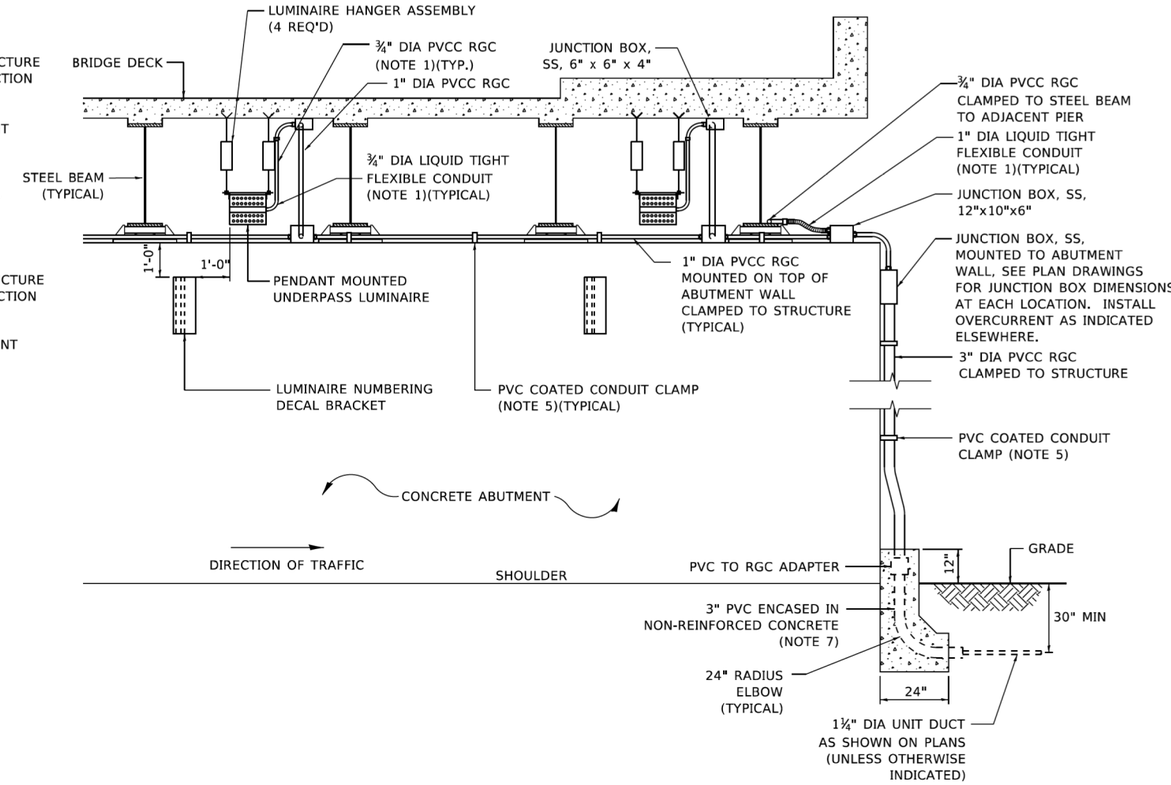

NOTES:

1. LIQUID TIGHT FLEXIBLE METAL CONDUIT, MAXIMUM LENGTH 6'-0", TYPICAL FOR EACH INSTANCE AS SHOWN. PROVIDE PVC COATED RIGID GALVANIZED STEEL CONDUIT AS REQUIRED NOT TO EXCEED 6'-0" OF FLEXIBLE LIQUID TIGHT METAL CONDUIT. LIQUID TIGHT FLEXIBLE METAL CONDUIT WILL BE INCLUDED IN THE COST OF THE CONDUIT ATTACHED TO STRUCTURE, OF THE CORRESPONDING DIA., GALVANIZED STEEL, PVC COATED PAY ITEM EXCEPT THAT " DIA. CONDUIT AND " DIA. FLEXIBLE CONDUIT SHALL BE INCLUDED IN THE COST OF UNDERPASS LUMINAIRE INSTALLATION.
2. SEE UNDERPASS LIGHTING PLANS FOR INSTALLATION LOCATION OF UNDERPASS LIGHTING LUMINAIRES.
3. THE CONTRACTOR SHALL USE APPROVED SINGLE COIL FLARED LOOP INSERTS WHEN SUSPENDED MOUNTING AN UNDERPASS LUMINAIRE TO A NEW BRIDGE DECK. THE FLARED LOOP INSERTS MUST BE CAST INTO THE CONCRETE DECK. THE CONTRACTOR IS RESPONSIBLE FOR LOCATING AND COORDINATING THE INSERT LOCATIONS FOR MOUNTING THE UNDERPASS LIGHTING SYSTEM AS SHOWN ON THE PLANS WITH THE BRIDGE DECK CONTRACTOR. SEE DETAIL.
4. THE UNDERPASS LUMINAIRE HANGER ASSEMBLY COMPLETE WITH HEAVY DUTY ANCHORS/INSERTS AND ALL APPLICABLE HARDWARE SHALL BE INCLUDED IN THE COST OF THE UNDERPASS LUMINAIRE PAY ITEM.
5. SECURE THE CONDUIT WITH PVC COATED CONDUIT CLAMPS OR CONDUIT BEAM CLAMPS AS SHOWN AT 5'-0" INTERVALS FOR LATERALS AND WITHIN 2'-0" MAXIMUM FROM ANY JUNCTION BOX, FLEXIBLE CONDUIT, OR CHANGE IN DIRECTION. ALL PVC COATED CONDUIT CLAMPS OR BEAM CLAMPS SHALL BE INCLUDED WITH THE COST OF THE "CONDUIT ATTACHED TO STRUCTURE, OF THE CORRESPONDING DIA., GALVANIZED STEEL, PVC COATED" PAY ITEM.
6. ALL UNDERPASS LUMINAIRES MUST BE CENTERED IN THE BEAM SPACE AS INDICATED ON THE PLANS UNLESS OTHERWISE DIRECTED BY THE ENGR. LUMINAIRE SETBACK SHALL BE AS INDICATED IN PLANS FOR EACH SPECIFIC UNDERPASS
7. THE CONCRETE ENCASED CONDUIT TRANSITION SHALL BE INCLUDED IN THE COST OF THE GALVANIZED RIGID STEEL CONDUIT PAY ITEMS.
8. ALL CONDUIT ATTACHED TO STRUCTURE SHALL BE PVC COATED RIGID STEEL CONDUIT (PVCC RGC) TYPICAL.
9. IN NO INSTANCE SHALL ANY UNDERPASS LUMINAIRE OR ANY OTHER ELECTRICAL EQUIPMENT BE INSTALLED BELOW THE ELEVATION OF THE BOTTOM OF THE BRIDGE BEAM WHEN OVER ANY PAVEMENT (ROADWAY OR SHOULDER).

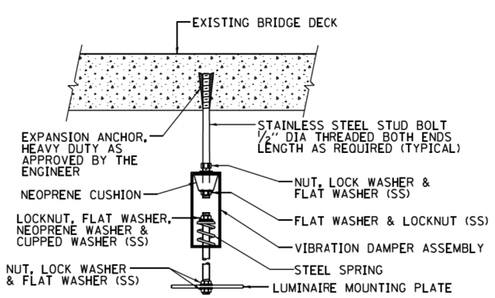

EXISTING BRIDGE DECK INSTALLATION

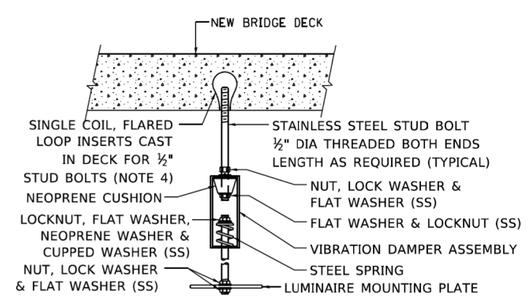

NEW BRIDGE DECK INSTALLATION

TYPICAL LUMINAIRE HANGER ASSEMBLY DETAILS

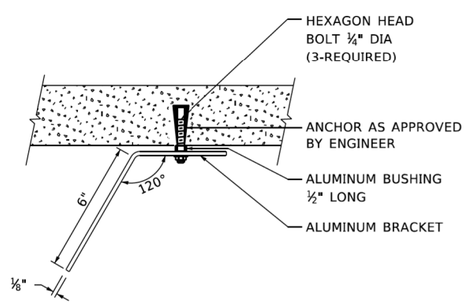

TOP VIEW

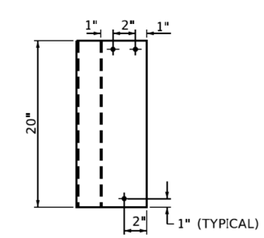

ELEVATION

LUMINAIRE NUMBERING DECAL BRACKET

NOT TO SCALE

PVC COATED CONDUIT BEAM CLAMP
NOT TO SCALE

PVC COATED CONDUIT CLAMP
NOT TO SCALE

MODEL: Default
FILE NAME: pw:\\gallanroom.dot.illinois.gov:PWIDOT\Documents\IDOT Offices\District 1\Projects\DistSd22x34\CADData\CADsheets\be901.dgn

USER NAME = gagllanobt	DESIGNED -	REVISED - 12-12-05	
	DRAWN -	REVISED -	
PLOT SCALE = 100.0000 ' / in.	CHECKED -	REVISED -	
PLOT DATE = 1/15/2020	DATE -	REVISED -	

STATE OF ILLINOIS
DEPARTMENT OF TRANSPORTATION

SUSPENDED MOUNT LED UNDERPASS LUMINAIRE INSTALLATION DETAILS

SCALE: NONE | SHEET 1 OF 1 SHEETS | STA. TO STA.

F.A.I. RTE.	SECTION	COUNTY	TOTAL SHEETS	SHEET NO.
94	(42-B-11-1) BR, BJR 24	COOK	761	741
	BE-901	CONTRACT NO. 62W87		
		ILLINOIS FED. AID PROJECT		

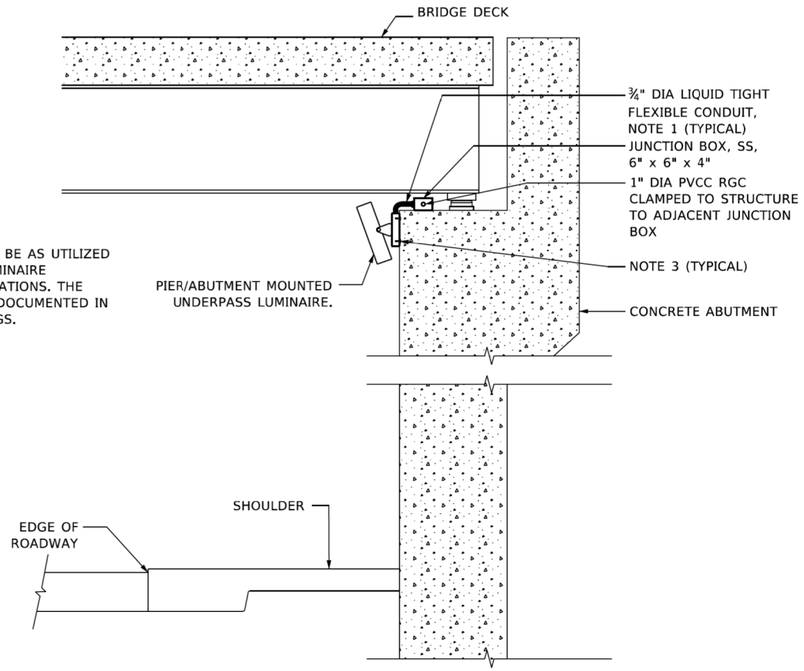

NOTE:

LUMINAIRE TILT SHALL BE AS UTILIZED IN THE APPROVED LUMINAIRE PHOTOMETRIC CALCULATIONS. THE TILT ANGLE MUST BE DOCUMENTED IN THE RECORD DRAWINGS.

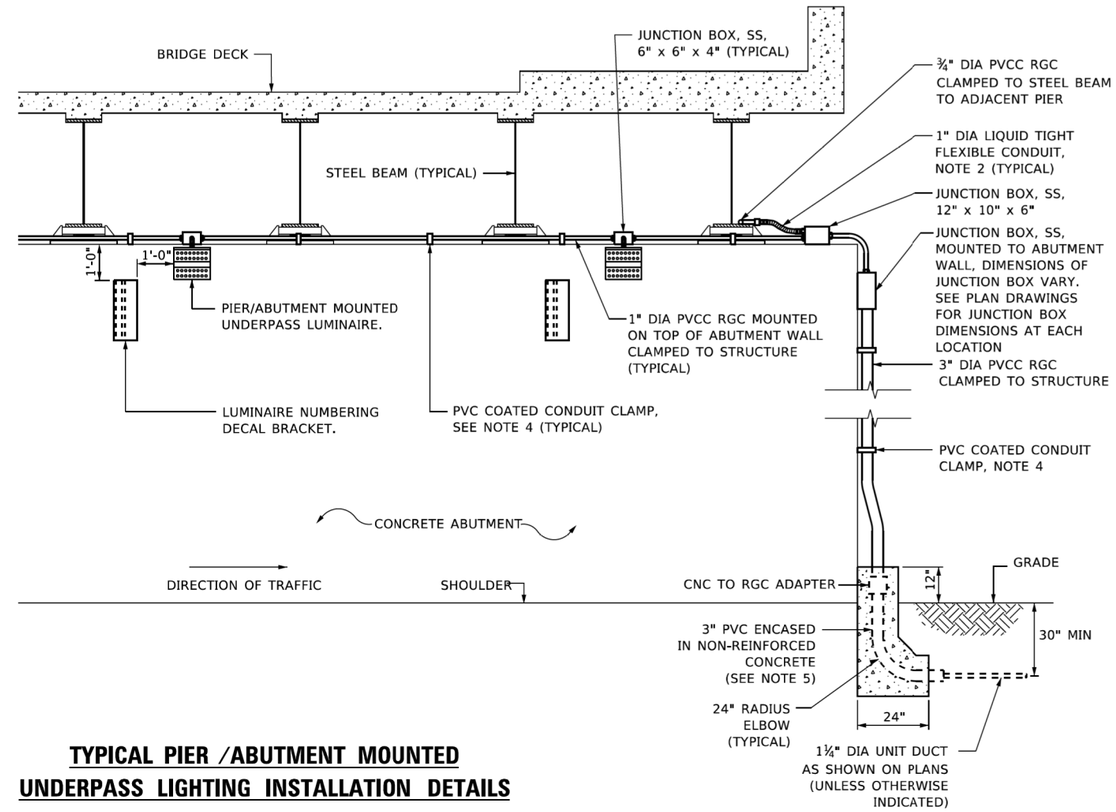

TYPICAL PIER /ABUTMENT MOUNTED UNDERPASS LIGHTING INSTALLATION DETAILS

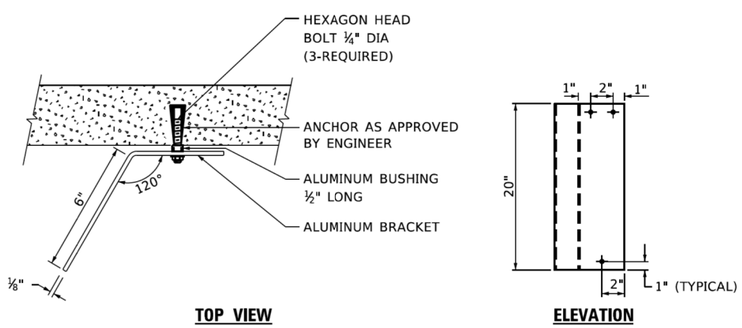

TOP VIEW

ELEVATION

LUMINAIRE NUMBERING DECAL BRACKET

NOT TO SCALE

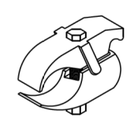

PVC COATED CONDUIT BEAM CLAMP

NOT TO SCALE

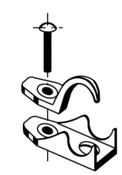

PVC COATED CONDUIT CLAMP

NOT TO SCALE

NOTES:

1. LIQUID TIGHT FLEXIBLE METAL CONDUIT, MAXIMUM LENGTH 6'-0", TYPICAL FOR EACH INSTANCE AS SHOWN. PROVIDE PVC COATED RIGID GALVANIZED STEEL CONDUIT AS REQUIRED NOT TO EXCEED 6'-0" OF FLEXIBLE LIQUID TIGHT METAL CONDUIT. LIQUID TIGHT FLEXIBLE METAL CONDUIT WILL BE INCLUDED IN THE COST OF THE CONDUIT ATTACHED TO STRUCTURE, OF THE CORRESPONDING DIA., GALVANIZED STEEL, PVC COATED PAY ITEM EXCEPT THAT THE COST OF THE " DIA. RIGID STEEL CONDUIT AND " DIA. FLEXIBLE CONDUIT SHALL BE INCLUDED IN THE LUMINAIRE INSTALLATION.
2. SEE UNDERPASS LIGHTING PLANS FOR INSTALLATION LOCATION OF UNDERPASS LIGHTING LUMINAIRES.
3. UNDERPASS LUMINAIRE MOUNTED TO FACE OF PIER OR ABUTMENT WALL WITH ½" ALUMINUM SPACERS. MOUNTING HEIGHT OF 1" BELOW THE TOP OF PIER OR ABUTMENT WALL TYPICAL FOR ALL PIER/ABUTMENT MOUNTED UNDERPASS LUMINAIRES UNLESS OTHERWISE NOTED.
4. EXPANSION ANCHOR, POWDER ACTUATED FASTENERS WILL NOT BE ALLOWED. EXPANSION ANCHOR MUST BE SIZED IN ACCORDANCE WITH MANUFACTURERS REQUIREMENTS.
5. SECURE THE CONDUIT WITH PVC COATED CONDUIT CLAMPS OR CONDUIT BEAM CLAMPS AS SHOWN AT 5'-0" INTERVALS FOR LATERALS AND WITHIN 2'-0" MAXIMUM FROM ANY JUNCTION BOX, FLEXIBLE CONDUIT, OR CHANGE IN DIRECTION. ALL PVC COATED CONDUIT CLAMPS OR BEAM CLAMPS SHALL BE INCLUDED WITH THE COST OF THE "CONDUIT ATTACHED TO STRUCTURE, OF THE CORRESPONDING DIA., GALVANIZED STEEL, PVC COATED" PAY ITEM.
6. THE CONCRETE ENCASED CONDUIT TRANSITION SHALL BE INCLUDED IN THE COST OF THE GALVANIZED RIGID STEEL CONDUIT PAY ITEMS.
7. ALL CONDUIT ATTACHED TO STRUCTURE SHALL BE PVC COATED RIGID STEEL CONDUIT (PVCC RGC) TYPICAL.

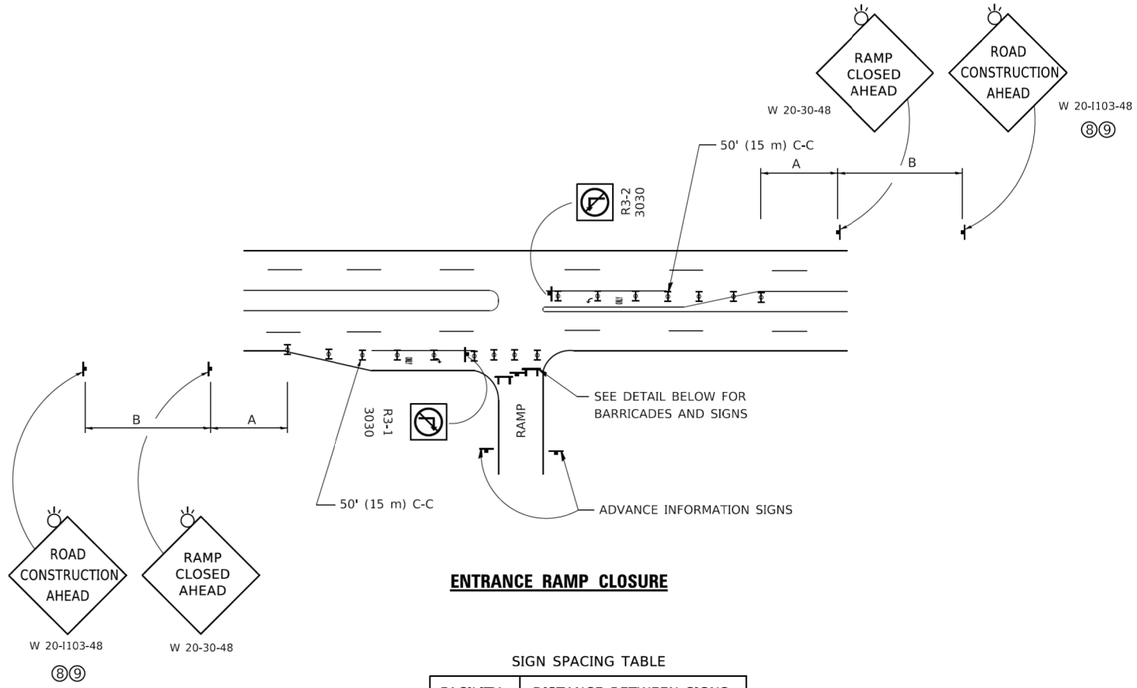

ENTRANCE RAMP CLOSURE

SIGN SPACING TABLE

FACILITY	DISTANCE BETWEEN SIGNS	
	A	B
EXPRESSWAY >24 HOURS	1000' (300 m)	1500' (450 m)
EXPRESSWAY ≤24 HOURS	500' (150 m)	500' (150 m)
ARTERIAL 55 MPH	500' (150 m)	500' (150 m)
ARTERIAL 50-45 MPH	350' (100 m)	350' (100 m)
ARTERIAL <45 MPH	200' (60 m)	200' (60 m)

DISTANCES MAY BE SHORTENED DEPENDING UPON THE PROXIMITY OF ADJACENT RAMPS OR INTERSECTIONS.

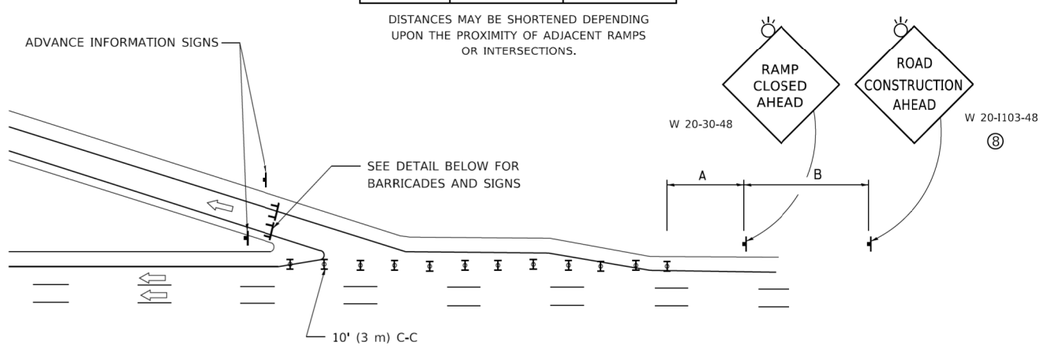

EXIT RAMP CLOSURE

SYMBOLS

TYPE II BARRICADE OR DRUM

TYPE III BARRICADE WITH 2 FLASHING LIGHTS

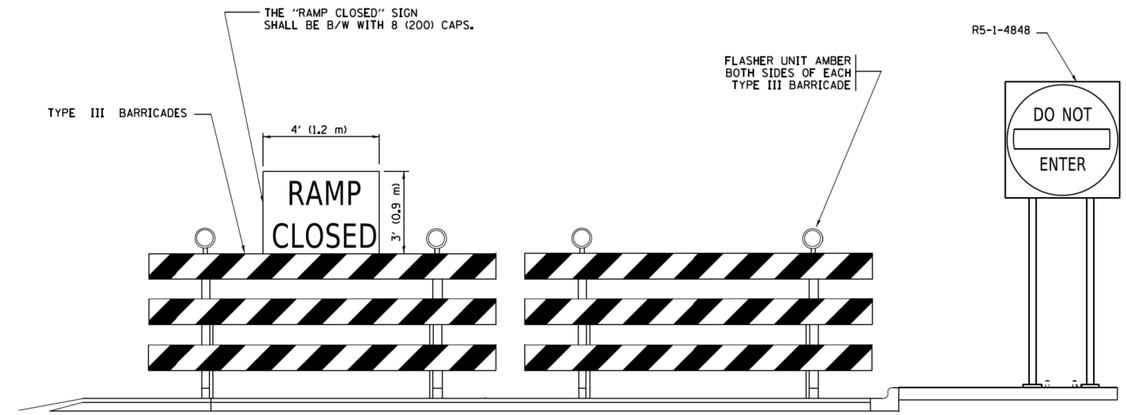

DETAIL FOR REQUIRED BARRICADES & SIGNS

RAMP CLOSURE ADVANCE WARNING SIGN

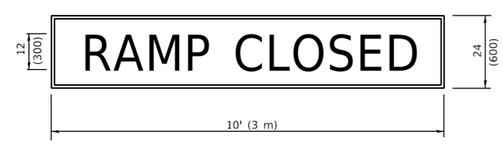

BLACK LEGEND ON ORANGE BACKGROUND MOUNTED DIAGONALLY
E MOD FONT
1 (25) BORDER
THESE SIGNS ARE REQUIRED ON ALL THE EXIT GUIDE SIGNS FOR EXIT RAMPS THAT WILL BE CLOSED FOR MORE THAN FOUR (4) CONSECUTIVE DAYS.

RAMP CLOSURE ADVANCE INFORMATION SIGN

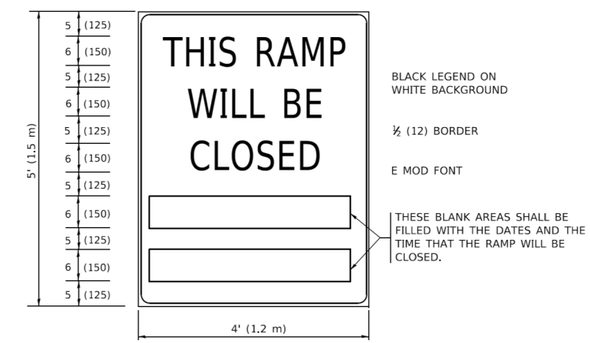

THESE SIGNS ARE REQUIRED ON BOTH SIDES OF THE RAMP, MINIMUM OF 1 WEEK IN ADVANCE OF THE CLOSURE.

THESE SIGNS SHALL BE FABRICATED AND PAID FOR ACCORDING TO THE TEMPORARY INFORMATION SIGNING SPECIAL PROVISION

GENERAL NOTES:

1. CONES MAY BE SUBSTITUTED FOR DRUMS OR TYPE II BARRICADES DURING DAY OPERATIONS. CONES SHALL BE A MINIMUM OF 28 (700) HIGH.
2. VERTICAL BARRICADES SHALL NOT BE USED FOR RAMP CLOSURES.
3. A FLAGGER SHALL BE POSITIONED AT EACH CLOSED RAMP THAT IS OPEN TO CONSTRUCTION VEHICLES, PRECEEDED BY A W20-7 FLAGGER WARNING SIGN.
4. ALL ROUTE MARKERS AND TRAILBLAZER ASSEMBLIES WHICH DIRECT MOTORISTS TO A CLOSED ENTRANCE RAMP SHALL BE COVERED WHEN THE RAMP IS CLOSED FOR MORE THAN FOUR (4) DAYS.
5. THE SIGNING AND BARRICADING WHICH IS REQUIRED BY THIS DETAIL SHALL BE INCLUDED IN THE COST OF TRAFFIC CONTROL AND PROTECTION (EXPRESSWAYS).
6. AUTHORIZATION FROM THE DISTRICT'S BUREAU OF TRAFFIC IS REQUIRED FOR ALL RAMP CLOSURES.
7. THE RAMP CLOSURE ADVANCE INFORMATION SIGNS SHALL BE ERECTED IF THE CLOSURE TIME EXCEEDS TWENTY-FOUR (24) HOURS. ADDITIONAL ADVANCE WARNING SIGNS ON EXIT GUIDE SIGNING WILL BE REQUIRED FOR EXIT RAMP CLOSURES THAT EXCEED FOUR (4) DAYS IN LENGTH
8. ROAD CONSTRUCTION AHEAD SIGNS MAY BE OMITTED WHEN THIS DETAIL IS USED IN CONJUNCTION WITH OTHER TRAFFIC CONTROL THAT ALREADY INCLUDES A ROAD CONSTRUCTION AHEAD SIGN.
9. ARTERIAL ROAD CONSTRUCTION AHEAD SIGNS SHALL BE INSTALLED ON THE LEFT SIDE OF TRAFFIC IF THE MEDIAN IS MORE THAN 10 FT WIDE.

ALL DIMENSIONS ARE IN INCHES (MILLIMETERS) UNLESS OTHERWISE SHOWN.

MODEL: Default
FILE NAME: pw:\\IL084EBIDINTEG.illinois.gov:PWIDOT\Documents\IDOT Offices\District 1\Projects\Dist5\d22x34\CADData\CADsheets\tc08.dgn

USER NAME = footemj	DESIGNED - D.W.S.	REVISED - S.P.B._01-07	
	DRAWN -	REVISED - S.P.B._12-09	
PLOT SCALE = 50.0000 ' / in.	CHECKED -	REVISED - M.D._06-13	
PLOT DATE = 3/4/2019	DATE - 02-83	REVISED - M.D._01-18	

STATE OF ILLINOIS
DEPARTMENT OF TRANSPORTATION

ENTRANCE_AND_EXIT_RAMP CLOSURE_DETAILS

SCALE: NONE | SHEET 1 OF 1 SHEETS | STA. TO STA.

F.A.I. RTE.	SECTION	COUNTY	TOTAL SHEETS	SHEET NO.
94	(42-B-11-1) BR, BJR 24	COOK	761	743
	TC-08	CONTRACT NO. 62W87		
		ILLINOIS	FED. AID PROJECT	

tc08.dgn 3/4/2019 10:22:32 AM User=footemj

SINGLE LANE WEAVE

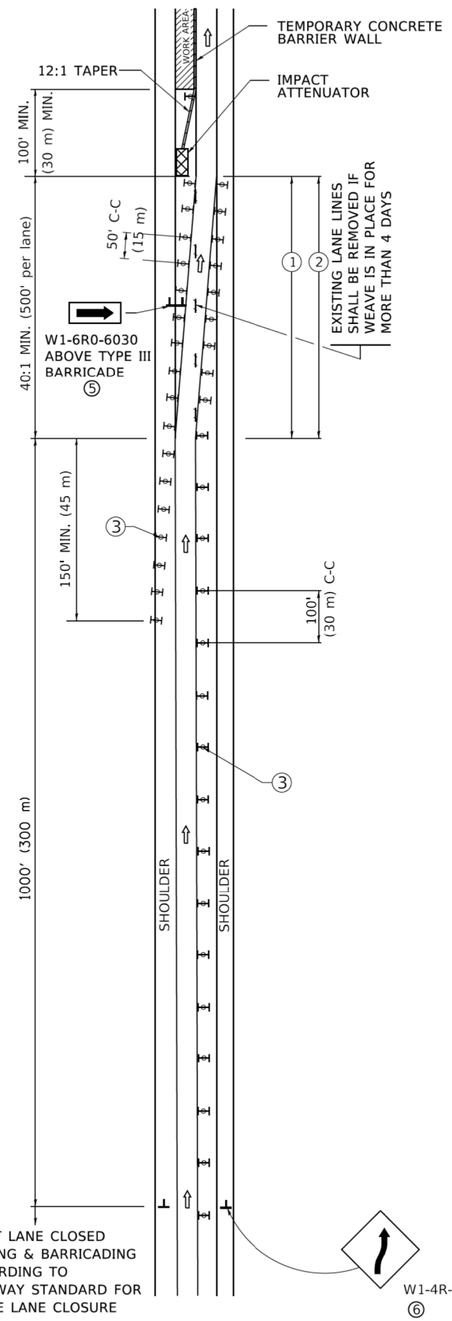

MULTI–LANE WEAVE

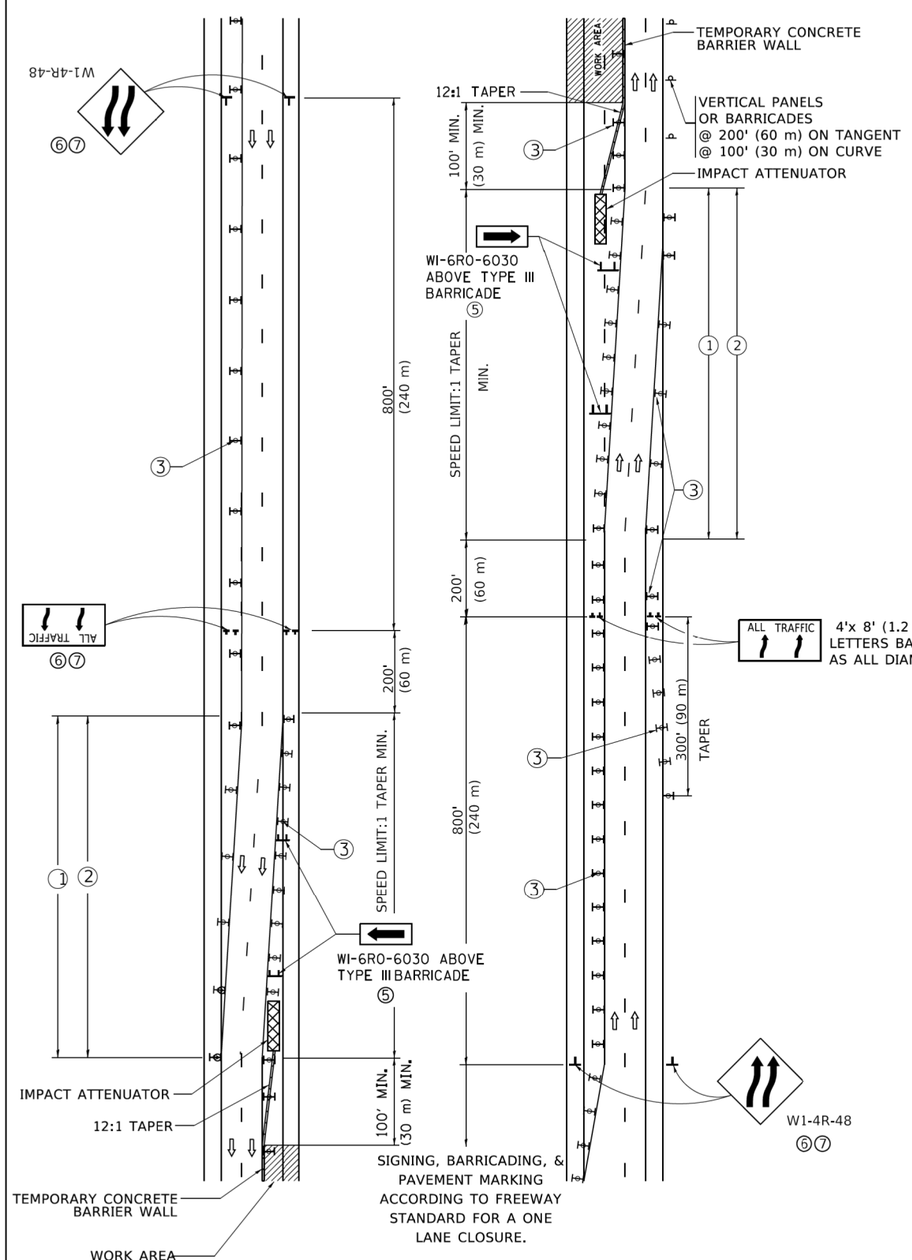

GENERAL NOTES:

① EXISTING CONFLICTING PAVEMENT MARKING LINES SHALL BE REMOVED. PAVEMENT MARKING REMOVAL SHALL NOT BE REQUIRED FOR SINGLE LANE WEAVES UNDER 4 DAYS IN DURATION.

② CONTINOUS REFLECTIVE TEMPORARY PAVEMENT MARKING TAPE SHALL BE PLACED THROUGHOUT THE TAPER AND FOR 300' (90 m) ALONG SIDE THE WORK AREA WHERE THE CLOSURE TIME IS GREATER THAN FOURTEEN DAYS. THE LEFT EDGE LINE SHALL BE YELLOW AND THE RIGHT EDGE LINE SHALL BE WHITE. FOR MULTI-LANE WEAVES LANE LINES SHALL BE 5 INCH, 10'-30' (3 m-9 m) SKIP DASH, WHITE.

③ PLASTIC DRUMS WITH STEADY BURN LIGHTS AT 50' (15 m) C-C SPACING IN TAPERS AND 100' (30 m) C-C SPACING IN TANGENTS.

④ ALL SIGNS SHALL BE POST MOUNTED IF THE CLOSURE TIME EXCEEDS FOUR DAYS.

⑤ TYPE III BARRICADES MAY BE OMMITTED FOR SINGLE-LANE WEAVES UNDER 24-HOURS IN DURATION. W1-6 SIGNS WILL STILL BE REQUIRED. IF THE WIDTH OF OFFSET IS LESS THAN 6' THEN THE TYPE III BARRICADE WITH ATTACHED ARROW SIGN PANEL CAN BE ELIMINATED IN THE TAPER AREAS.

⑥ WHEN THE LENGTH OF THE SHIFTED SEGMENT (DISTANCE BETWEEN WEAVE POINTS) IS LESS THAN 1500', DOUBLE REVERSE CURVE SIGNS (W24-1) SHOULD BE USED INSTEAD OF THE REVERSE CURVE (W1-4) SIGNS. ARROWS ON THE 4'X8' "ALL TRAFFIC" SIGNS SHALL BE THE SAME SHAPE.

⑦ THE NUMBER OF ARROWS ON THESE SIGNS SHALL MATCH THE NUMBER OF LANES OPEN TO TRAFFIC.

ALL TRAFFIC — 4'x 8' (1.2 m x 2.4 m); 1 (25) BORDER; 10 (250) CAPITAL LETTERS BACKGROUND SHEETING SHALL BE THE SAME AS ALL DIAMOND SHAPED CONSTRUCTION SIGNS.

SYMBOLS

- DIRECTION OF TRAFFIC
- WORK AREA
- SIGN ON PORTABLE OR PERMANENT SUPPORT
- TYPE II BARRICADE OR DRUM WITH MONO-DIRECTIONAL STEADY BURNING LIGHT
- TEMPORARY CONCRETE BARRIER WALL
- IMPACT ATTENUATOR
- W24-1-48 ⑦

ALL DIMENSIONS ARE IN INCHES (MILLIMETERS) UNLESS OTHERWISE SHOWN

MODEL: Default
FILE NAME: pw:\\IL084EBIDINTEG.illinois.gov:PWIDOT\Documents\IDOT Offices\District 1\Projects\DistStd22x34\CADdata\CADsheets\tc05.dgn

USER NAME = footemj	DESIGNED - D.W.S.	REVISED - J.A.F. 02-06	STATE OF ILLINOIS DEPARTMENT OF TRANSPORTATION	TRAFFIC CONTROL DETAILS FOR FREEWAY SINGLE & MULTI–LANE WEAVE	
	DRAWN -	REVISED - S.P.B. 01-07			
PLOT SCALE = 50.0000 ' / in.	CHECKED -	REVISED - S.P.B. 12-09			
PLOT DATE = 3/4/2019	DATE - 02-87	REVISED - M.D. 06-13		SCALE: NONE	SHEET 1 OF 1 SHEETS STA. TO STA.

F.A.I. RTE.	SECTION	COUNTY	TOTAL SHEETS	SHEET NO.
94	(42-B-11-1) BR, BJR 24	COOK	761	744
TC-09		CONTRACT NO. 62W87		
		ILLINOIS FED. AID PROJECT		

tc09.dgn 3/4/2019 10:24:46 AM User=footemj

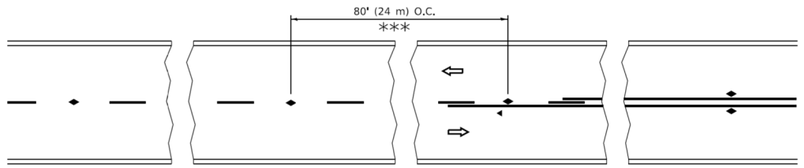

*** REDUCE TO 40' (12 m) O.C. ON CURVES WITH POSTED OR ADVISORY SPEED 45 M.P.H. (70 km/h) OR LESS.

TWO–LANE/TWO–WAY

SEE FIGURE 3B-14 MUTCD

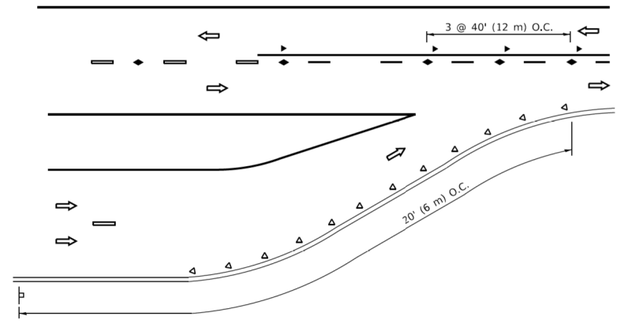

LANE REDUCTION TRANSITION

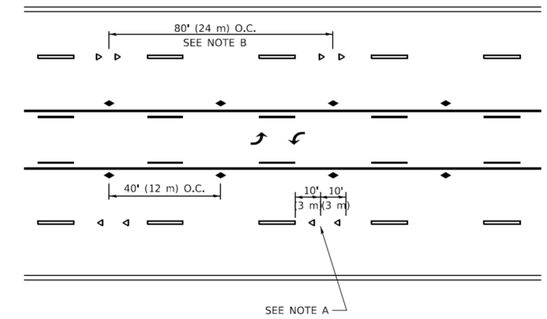

TWO–WAY LEFT TURN

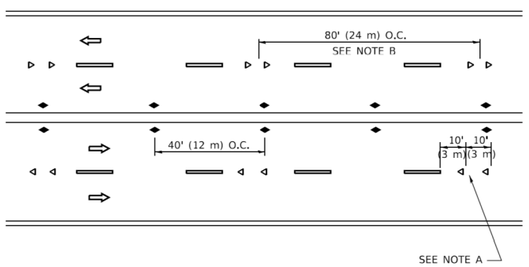

MULTI–LANE/UNDIVIDED

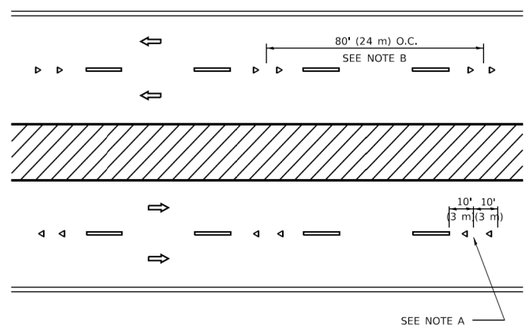

MULTI–LANE/DIVIDED

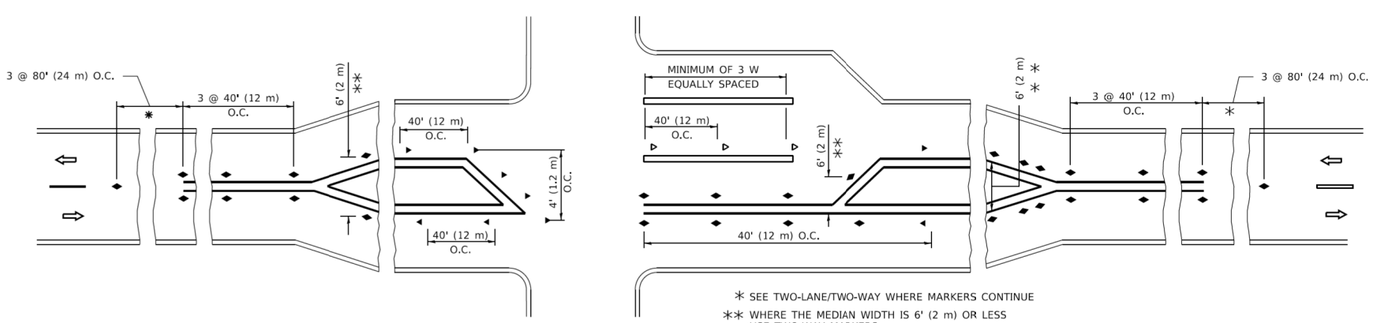

* SEE TWO-LANE/TWO-WAY WHERE MARKERS CONTINUE

** WHERE THE MEDIAN WIDTH IS 6' (2 m) OR LESS USE TWO-WAY MARKERS.

TURN LANES

GENERAL NOTES

1. MARKERS USED WITH DASHED LINES SHALL BE CENTERED IN THE GAP BETWEEN SEGMENTS.
2. MARKERS USED ADJACENT TO SOLID LINES SHALL BE OFFSET 2 TO 3 (50 TO 75) TOWARD TRAFFIC AS SHOWN.
3. MARKERS THROUGH TANGENTS LESS THAN 500' (150 m) IN LENGTH BETWEEN CURVES SHALL BE INSTALLED AT THE LESSER OF THE TWO CURVE SPACINGS.
4. MARKERS ARE TO BE USED ADJACENT TO BOTH SOLID WHITE LINES IN DUAL LEFT TURN LANES

SYMBOLS

- YELLOW STRIPE
- WHITE STRIPE
- ONE-WAY AMBER MARKER
- ONE-WAY CRYSTAL MARKER (W/O)
- TWO-WAY AMBER MARKER

LANE MARKER NOTES

A. USE DOUBLE LANE LINE MARKERS SPACED AS SHOWN.

B. REDUCE TO 40' (12 m) O.C. ON CURVES WHERE ADVISORY SPEEDS ARE 10 M.P.H (20 km/h) LOWER THAN POSTED SPEEDS.

DESIGN NOTES

1. DOUBLE LANE LINE MARKERS SHALL BE USED UNLESS SPECIFIED OTHERWISE.
2. EXCEPT AS SHOWN ON THE LANE REDUCTION TRANSITION AND FREEWAY EXIT RAMP DETAIL, MARKERS ARE NOT TO BE SPECIFIED ON RIGHT EDGE LINES.
3. THE EXACT MARKER LIMITS, SPACING, AND COLOR SHALL BE INCLUDED IN THE PLANS WHEN STANDARD SPECIFICATIONS ARE NOT BEING USED.
4. MARKERS SHOULD NOT BE USED ALONGSIDE CURBS EXCEPT FOR EXTREMELY SHORT SECTIONS OF CURBS WHERE NOT MORE THAN TWO MARKERS WOULD BE INVOLVED.

All dimensions are in inches (millimeters) unless otherwise shown.

MODEL: Default
FILE NAME: pw:\\IL084EBIDINTEG.illinois.gov:PWIDOT\Documents\IDOT Offices\District 1\Projects\DistStd22x34\CADData\CADsheets\tc11.dgn

USER NAME = footemj	DESIGNED -	REVISED - T. RAMMACHER 03-12-99	STATE OF ILLINOIS DEPARTMENT OF TRANSPORTATION
	DRAWN -	REVISED - T. RAMMACHER 01-06-00	
PLOT SCALE = 50.0000 ' / in.	CHECKED -	REVISED - C. JUCIUS 09-09-09	
PLOT DATE = 3/4/2019	DATE -	REVISED - C. JUCIUS 07-01-13	

TYPICAL APPLICATIONS
RAISED REFLECTIVE PAVEMENT MARKERS (SNOW–PLOW RESISTANT)

SCALE: NONE | SHEET 1 OF 1 SHEETS | STA. TO STA.

F.A.I. RTE.	SECTION	COUNTY	TOTAL SHEETS	SHEET NO.
94	(42-B-11-1) BR, BJR 24	COOK	761	745
TC–11		CONTRACT NO. 62W87		
		ILLINOIS	FED. AID PROJECT	

tc11.dgn 3/4/2019 10:29:08 AM User=footemj

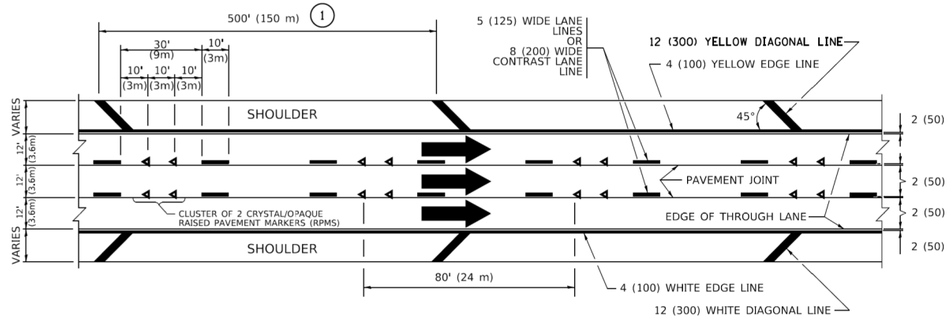

TYPICAL EDGE LINES & LANE LINES

PAVEMENT MARKING MATERIALS

1. THERMOPLASTIC PAVEMENT MARKING LINE SHALL BE USED FOR ALL EDGE LINES, GORE LINES, AND DIAGONAL LINES ON HMA PAVEMENTS.
2. POLYUREA OR MODIFIED URETHANE PAVEMENT MARKING LINE SHALL BE USED FOR ALL EDGE LINES, GORE LINES, AND DIAGONAL LINES ON PCC PAVEMENTS.
3. PREFORMED PLASTIC PAVEMENT MARKING LINE TYPE B, INLAID OR GROOVE IN, SHALL BE USED FOR ALL LANE LINES ON HMA PAVEMENTS.
4. CONTRAST PREFORMED PLASTIC PAVEMENT MARKING LINE TYPE B, GROOVE IN, SHALL BE USED FOR ALL LANE LINES ON PCC PAVEMENT.

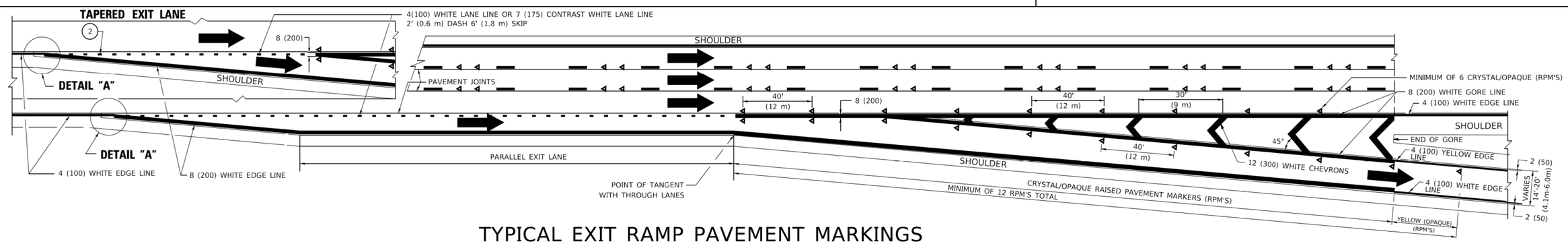

TYPICAL EXIT RAMP PAVEMENT MARKINGS

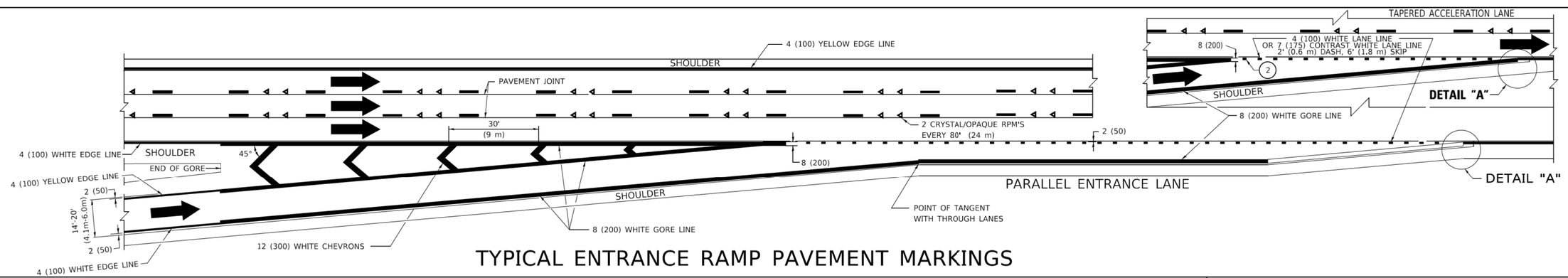

TYPICAL ENTRANCE RAMP PAVEMENT MARKINGS

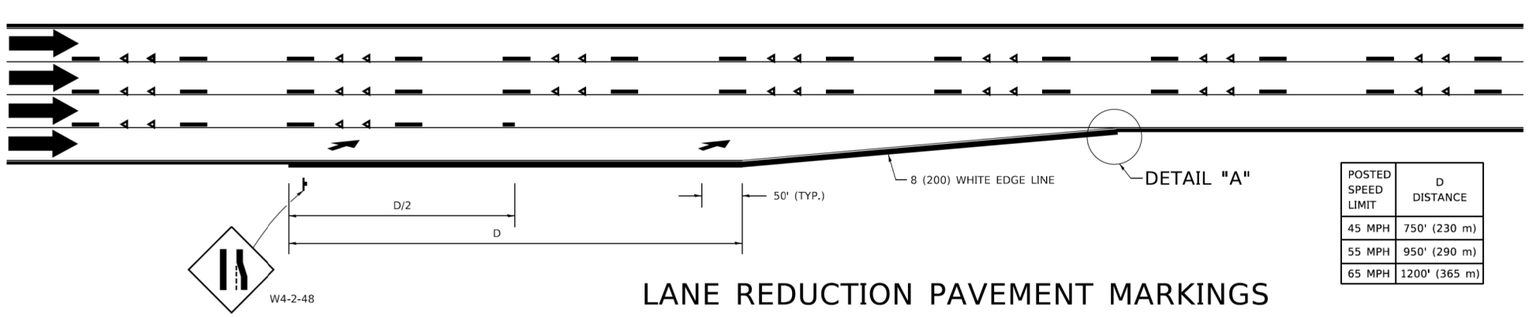

LANE REDUCTION PAVEMENT MARKINGS

POSTED SPEED LIMIT	D DISTANCE
45 MPH	750' (230 m)
55 MPH	950' (290 m)
65 MPH	1200' (365 m)

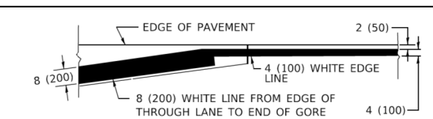

DETAIL "A"

NOTES:

1. THE DIAGONAL LINES SHALL BE SPACED AT 40' (12 m) C-C ACROSS ALL STRUCTURES WHICH ARE 500' (150 m) OR LESS IN LENGTH. THE DIAGONAL LINES ARE NOT REQUIRED ON SHOULDERS WHICH ARE 6' (1.8 m) OR LESS IN WIDTH.
2. 4" (2' DASH, 6' SKIP) MARKING ON TAPERED ENTRANCE AND EXIT RAMP SHALL BE OMITTED ON TANGENT SECTIONS.

MODEL: Default
FILE NAME: pw:\\IL084EBIDINTEG.illinois.gov:PWIDOT\Documents\IDOT Offices\District 1\Projects\DistStd22x34\CADdata\CADsheets\tc12.dgn

USER NAME = footemj	DESIGNED - D.W.S.	REVISED - S.P.B. 01-07	STATE OF ILLINOIS DEPARTMENT OF TRANSPORTATION
	DRAWN -	REVISED - S.P.B. 01-10	
PLOT SCALE = 50.0000 ' / in.	CHECKED -	REVISED - M.D. 05-13	
PLOT DATE = 3/4/2019	DATE - 01-90	REVISED - M.D. 09-17	

MULTI–LANE FREEWAY PAVEMENT MARKING DETAILS

SCALE: NONE | SHEET 1 OF 2 SHEETS | STA. TO STA.

F.A.I. RTE.	SECTION	COUNTY	TOTAL SHEETS	SHEET NO.
94	(42-B-11-1) BR, BJR 24	COOK	761	746
	TC–12	CONTRACT NO. 62W87		
		ILLINOIS FED. AID PROJECT		

tc12.dgn 3/4/2019 10:32:03 AM User=footemj

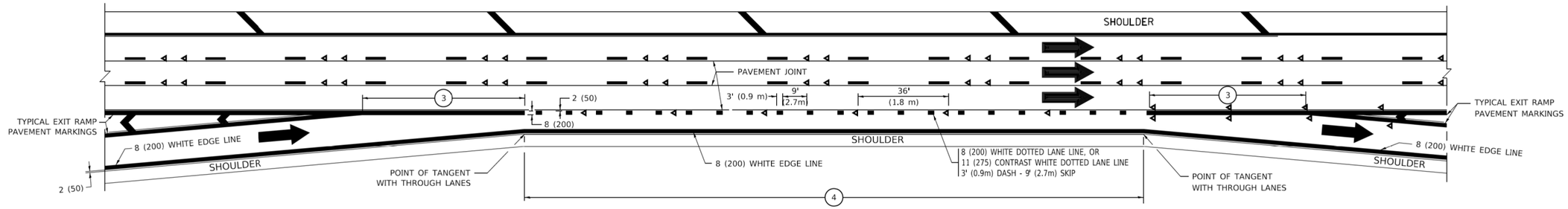

AUXILIARY LANE MARKINGS

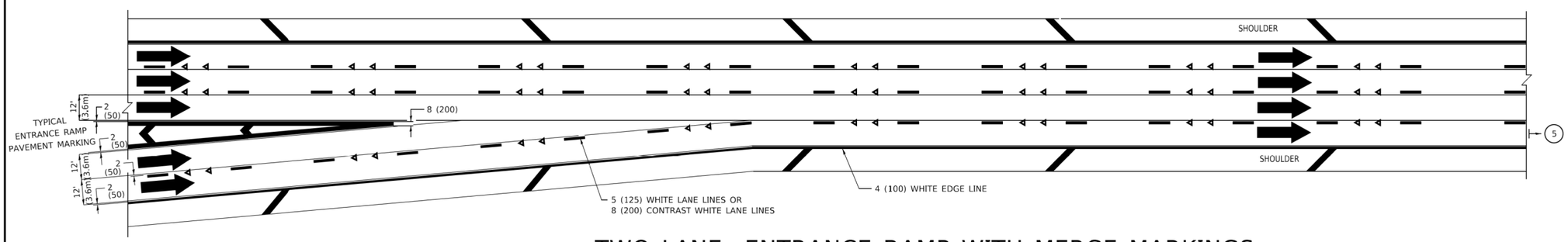

TWO LANE ENTRANCE RAMP WITH MERGE MARKINGS

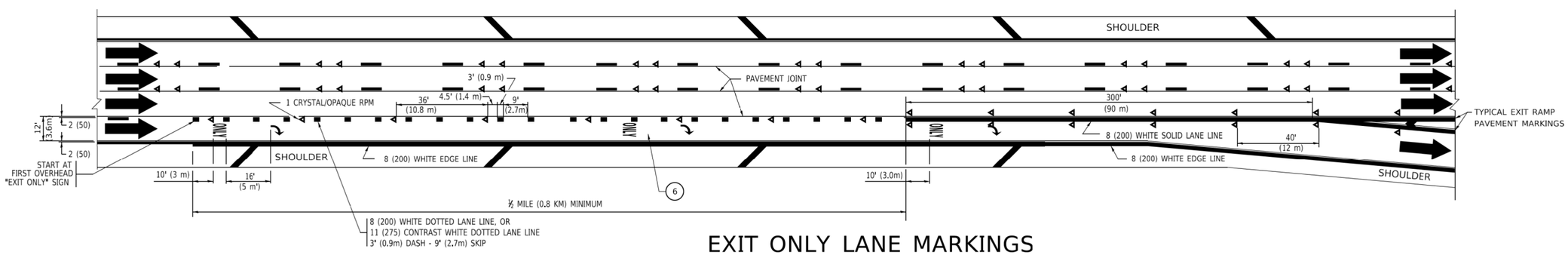

EXIT ONLY LANE MARKINGS

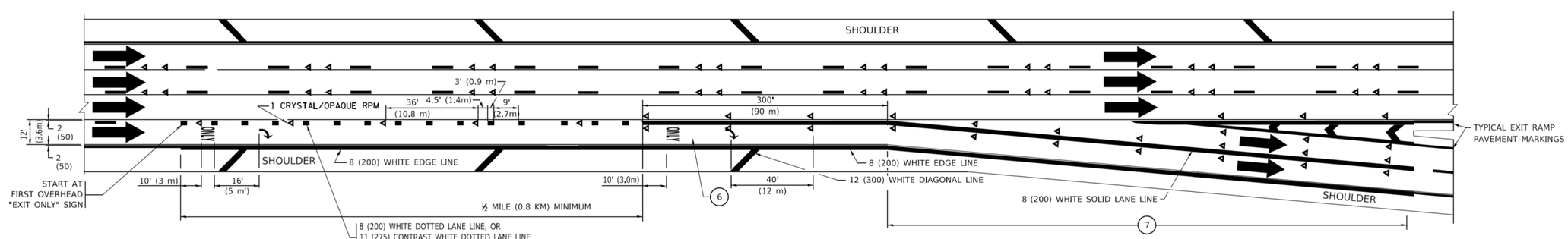

EXIT ONLY WITH OPTION LANE MARKINGS

NOTES:

3. OMIT WHEN LENGTH OF AUXILIARY LANE IS LESS THAN 500' (150 m).
4. 8-INCH WIDE DOTTED LANE LINE MARKINGS SHALL BE USED WHEN THE LENGTH OF THE AUXILIARY LANE IS 2 MILES OR LESS.
5. FOR TWO-LANE ENTRANCE RAMP, IF RIGHT LANE ENDS, USE TYPICAL ENTRANCE RAMP PAVEMENT MARKINGS.
6. ONLY AND ARROWS EQUALLY SPACED, 500' (150 m) MAXIMUM SPACING. FULL SIZE LETTERS AND ARROW SHALL BE USED..
7. CONTINUE 8" SOLID LANE LINE THROUGH EXIT TO END OF PAVED GORE.

USER NAME = footemj	DESIGNED - D.W.S.	REVISED - J.A.F. 02-06	STATE OF ILLINOIS DEPARTMENT OF TRANSPORTATION
	DRAWN -	REVISED - S.P.B. 01-07	
PLOT SCALE = 50.0000 ' / in.	CHECKED -	REVISED - S.P.B. 01-10	
PLOT DATE = 3/4/2019	DATE - 01-90	REVISED - M.D. 09-17	

MULTI-LANE FREEWAY PAVEMENT MARKING DETAILS

SCALE: NONE | SHEET 1 OF 2 SHEETS | STA. | TO STA.

F.A.I. RTE.	SECTION	COUNTY	TOTAL SHEETS	SHEET NO.
94	(42-B-11-1) BR, BJR 24	COOK	761	747
	TC-12	CONTRACT NO. 62W87		
	ILLINOIS	FED. AID PROJECT		

MODEL: Default
FILE NAME: pw:\\IL084EBI3NTEG.illinois.gov:PWIDOT\Documents\IDOT Offices\District 1\Projects\DistStd22x34\CADData\CADsheets\tc12.dgn

tc12.dgn 3/4/2019 10:32:33 AM User=footemj

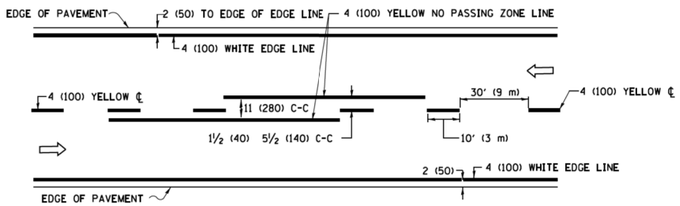

2–LANE ROADWAY

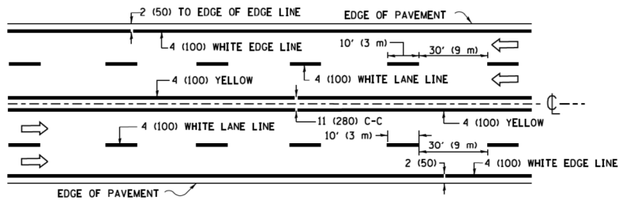

MULTI–LANE UNDIVIDED

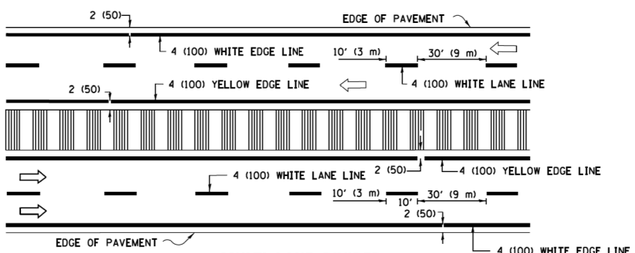

MULTI–LANE DIVIDED
WITH MEDIAN

TYPICAL LANE AND EDGE LINE MARKING

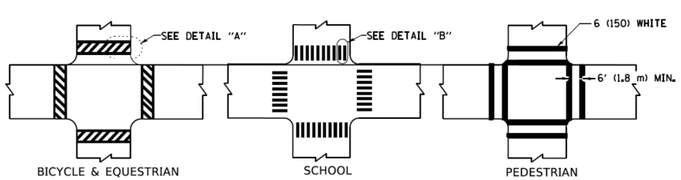

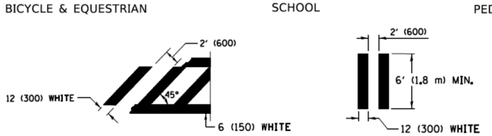

DETAIL "A" **DETAIL "B"**

TYPICAL CROSSWALK MARKING

✳ MARKINGS SHALL BE INSTALLED PARALLEL TO THE CENTERLINE OF THE ROAD WHICH IT CROSSES

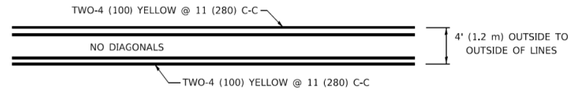

4' (1.2 m) WIDE MEDIANS ONLY

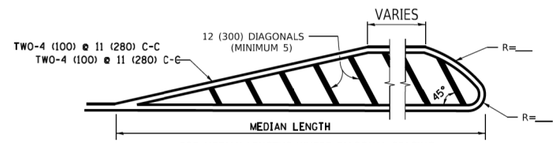

FOR MEDIAN LENGTHS WHERE DIAGONAL SPACING CANNOT BE ATTAINED, USE 5 (FIVE) EQUALLY SPACED DIAGONAL LINES.

DIAGONAL LINE SPACING: 50' (15 m) C-C (LESS THAN 30MPH (50 km/h))
75' (25 m) C-C 30MPH (50 km/h) TO 45MPH (70 km/h))
150' (45 m) C-C (MORE THAN 45MPH (70 km/h))

MEDIANS OVER 4' (1.2 m) WIDE

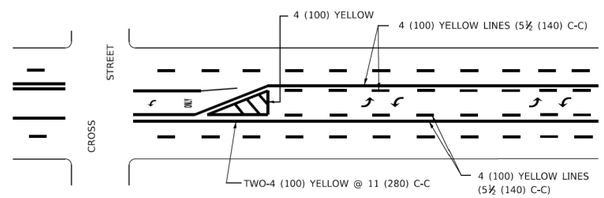

A MINIMUM OF TWO PAIRS OF TURN ARROWS SHALL BE USED, WHITE IN COLOR. ADDITIONAL PAIRS SHALL BE PLACED AT 200' (60 m) TO 300' (90 m) INTERVALS.

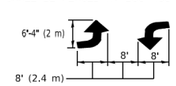

MEDIAN WITH TWO–WAY LEFT TURN LANE

TYPICAL PAINTED MEDIAN MARKING

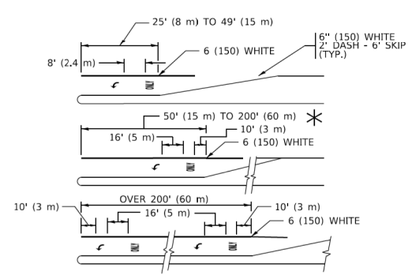

FULL SIZE LETTERS 8' (2.4 m) AND ARROWS SHALL BE USED.
↰ AREA = 15.6 SQ. FT. (1.5 m²) **ONLY** AREA = 20.8 SQ. FT. (1.9 m ²)

✳ TURN LANES IN EXCESS OF 400' (120 m) IN LENGTH MAY HAVE AN ADDITIONAL SET OF ARROW - "ONLY" INSTALLED MIDWAY BETWEEN THE OTHER TWO SETS OF ARROW - "ONLY".

TYPICAL LEFT (OR RIGHT) TURN LANE

TYPICAL TURN LANE MARKING

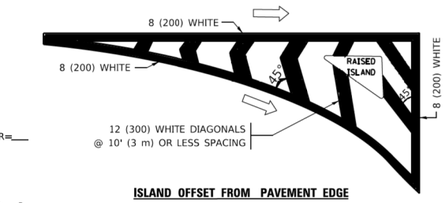

ISLAND OFFSET FROM PAVEMENT EDGE

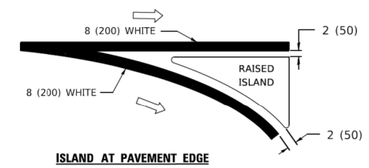

ISLAND AT PAVEMENT EDGE

TYPICAL ISLAND MARKING

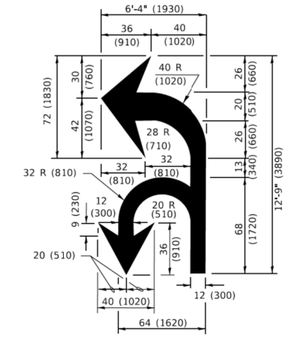

COMBINATION LEFT AND U–TURN

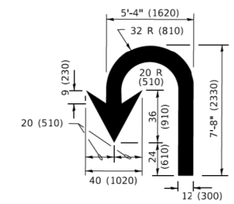

U–TURN

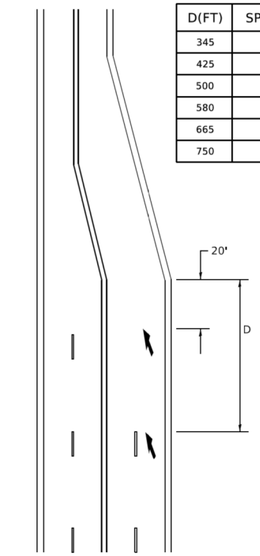

D(FT)	SPEED LIMIT
345	30
425	35
500	40
580	45
665	50
750	55

LANE REDUCTION TRANSITION

✳ LANE REDUCTION ARROWS REQUIRED AT SPEEDS OF 45 MPH OR GREATER OR WHEN SPECIFIED IN PLANS.

TYPE OF MARKING	WIDTH OF LINE	PATTERN	COLOR	SPACING / REMARKS
CENTERLINE ON 2 LANE PAVEMENT	4 (100)	SKIP-DASH	YELLOW	10' (3 m) LINE WITH 30' (9 m) SPACE
CENTERLINE ON MULTI-LANE UNDIVIDED PAVEMENT	2 @ 4 (100)	SOLID	YELLOW	11 (280) C-C
NO PASSING ZONE LINES: FOR ONE DIRECTION FOR BOTH DIRECTIONS	4 (100) 2 @ 4 (100)	SOLID SOLID	YELLOW YELLOW	5½ (140) C-C FROM SKIP-DASH CENTERLINE 11 (280) C-C OMIT SKIP-DASH CENTERLINE BETWEEN
LANE LINES	4 (100) 5 (125) ON FREEWAYS	SKIP-DASH SKIP-DASH	WHITE WHITE	10' (3 m) LINE WITH 30' (9 m) SPACE
DOTTED LINES (EXTENSIONS OF CENTER, LANE OR TURN LANE MARKINGS)	SAME AS LINE BEING EXTENDED	SKIP-DASH	SAME AS LINE BEING EXTENDED	2' (600) LINE WITH 6' (1.8 m) SPACE
EDGE LINES	4 (100)	SOLID	YELLOW-LEFT WHITE-RIGHT	OUTLINE MEDIANS IN YELLOW
TURN LANE MARKINGS	6 (150) LINE; FULL SIZE LETTERS & SYMBOLS (8' (2.4m))	SOLID	WHITE	SEE TYPICAL TURN LANE MARKING DETAIL
TWO WAY LEFT TURN MARKING	2 @ 4 (100) EACH DIRECTION 8' (2.4m) LEFT ARROW	SKIP-DASH AND SOLID IN PAIRS	YELLOW WHITE	10' (3 m) LINE WITH 30' (9 m) SPACE FOR SKIP-DASH; 5½ (140) C-C BETWEEN SOLID LINE AND SKIP-DASH LINE SEE TYPICAL TWO-WAY LEFT TURN MARKING DETAIL
CROSSWALK LINES (PEDESTRIAN) A. DIAGONALS (BIKE & EQUESTRIAN) B. LONGITUDINAL BARS (SCHOOL)	2 @ 6 (150) 12 (300) @ 45° 12 (300) @ 90°	SOLID SOLID SOLID	WHITE WHITE WHITE	NOT LESS THAN 6' (1.8 m) APART 2' (600) APART 2' (600) APART SEE TYPICAL CROSSWALK MARKING DETAILS.
STOP LINES	24 (600)	SOLID	WHITE	PLACE 4' (1.2 m) IN ADVANCE OF AND PARALLEL TO CROSSWALK, IF PRESENT. OTHERWISE, PLACE AT DESIRED STOPPING POINT. PARALLEL TO CROSSROAD CENTERLINE, WHERE POSSIBLE
PAINTED MEDIANS	2 @ 4 (100) WITH 12 (300) DIAGONALS @ 45° NO DIAGONALS USED FOR 4' (1.2 m) WIDE MEDIANS	SOLID	YELLOW: TWO WAY TRAFFIC WHITE: ONE WAY TRAFFIC	11 (280) C-C FOR THE DOUBLE LINE SEE TYPICAL PAINTED MEDIAN MARKING.
GORE MARKING AND CHANNELIZING LINES	8 (200) WITH 12 (300) DIAGONALS @ 45°	SOLID	WHITE	DIAGONALS: 15' (4.5 m) C-C (LESS THAN 30MPH (50 km/h)) 20' (6 m) C-C 30MPH (50 km/h) TO 45MPH (70 km/h)) 30' (9 m) C-C (OVER 45MPH (70 km/h))
RAILROAD CROSSING	24 (600) TRANSVERSE LINES; "RR" IS 6' (1.8 m) LETTERS; 16 (400) LINE FOR "X"	SOLID	WHITE	SEE STATE STANDARD 780001 AREA OF: "R"=3.6 SQ. FT. (0.33 m ²) EACH "X"=54.0 SQ. FT. (5.0 m ²)
SHOULDER DIAGONALS (REQUIRED FOR SHOULDERS ≥ 8')	12 (300) @ 45°	SOLID	WHITE - RIGHT YELLOW - LEFT	50' (15 m) C-C (LESS THAN 30MPH (50 km/h)) 75' (25 m) C-C (30 MPH (50 km/h) TO 45MPH (70 km/h)) 150' (45 m) C-C (OVER 45MPH (70 km/h))
U TURN ARROW	SEE DETAIL	SOLID	WHITE	16.3 SF
2 ARROW COMBINATION LEFT AND U TURN	SEE DETAIL	SOLID	WHITE	30.4 SF

FOR FURTHER DETAILS ON PAVEMENT MARKING REFER TO STANDARD SPECIFICATIONS FOR ROAD AND BRIDGE CONSTRUCTION AND STATE STANDARD 780001.

All dimensions are in inches (millimeters) unless otherwise shown.

MODEL: Default
FILE NAME: pw:\\IL084EBIDINTEG.illinois.gov:PWIDOT\Documents\IDOT Offices\District 1\Projects\DistStd22x34\CADData\CADsheets\tc13.dgn

USER NAME = footemj	DESIGNED - EVERS	REVISED - C. JUCIUS 09-09-09	
	DRAWN -	REVISED - C. JUCIUS 07-01-13	
PLOT SCALE = 50.0000 ' / in.	CHECKED -	REVISED - C. JUCIUS 12-21-15	
PLOT DATE = 3/4/2019	DATE - 03-19-90	REVISED - C. JUCIUS 04-12-16	

STATE OF ILLINOIS
DEPARTMENT OF TRANSPORTATION

DISTRICT ONE
TYPICAL PAVEMENT MARKINGS

SCALE: NONE | SHEET 1 OF 2 SHEETS | STA. TO STA.

F.A.I. RTE.	SECTION	COUNTY	TOTAL SHEETS	SHEET NO.
94	(42-B-11-1) BR, BJR 24	COOK	761	748
	TC–13	CONTRACT NO. 62W87		
		ILLINOIS FED. AID PROJECT		

tc13.dgn 3/4/2019 10:34:37 AM User=footemj

PARTIAL RAMP CLOSURE DETAILS

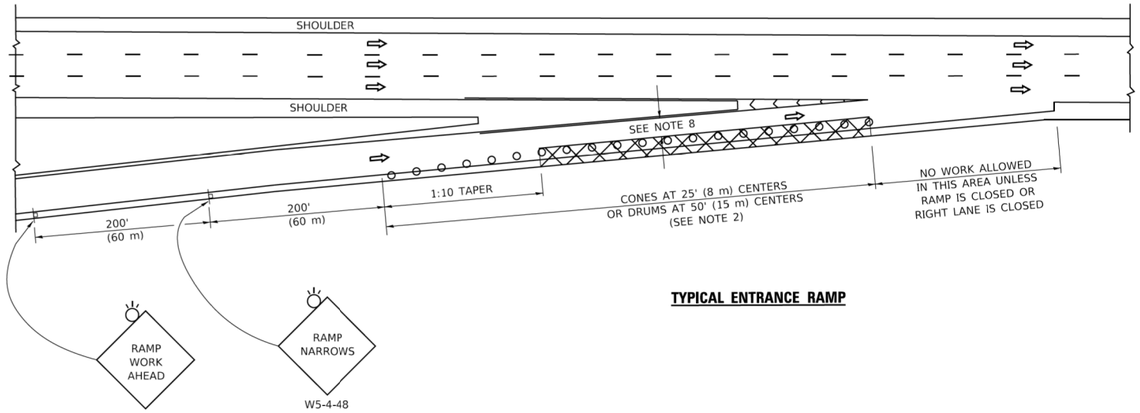

TYPICAL ENTRANCE RAMP

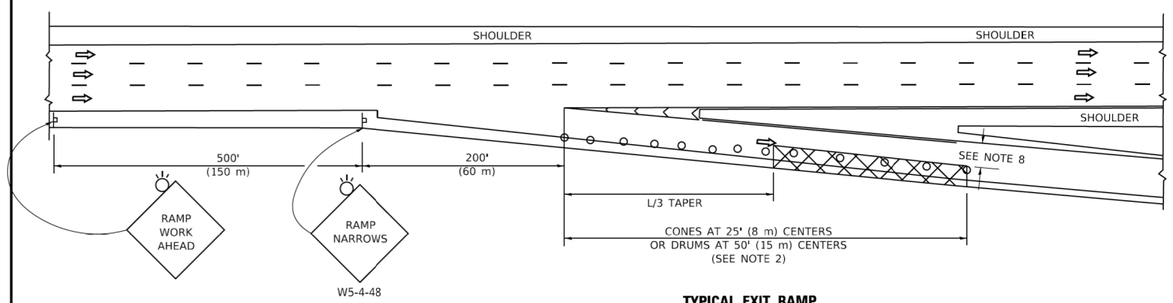

TYPICAL EXIT RAMP

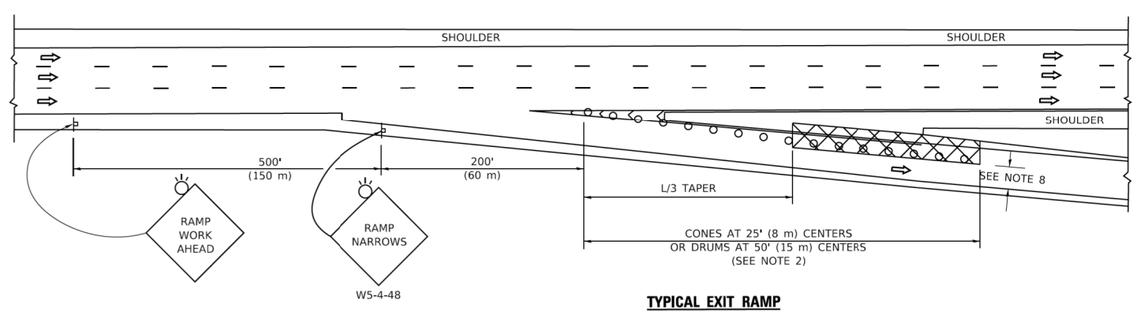

TYPICAL EXIT RAMP

SHOULDER CLOSURE DETAILS

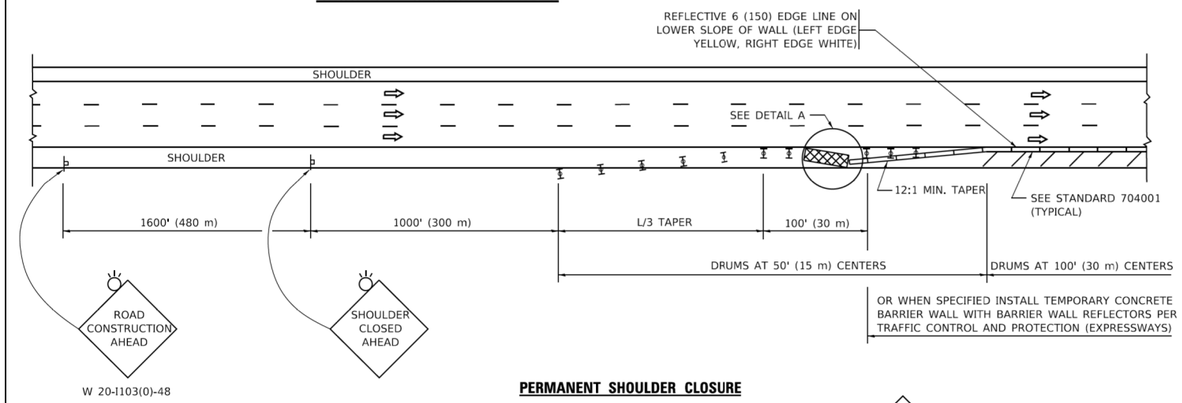

PERMANENT SHOULDER CLOSURE

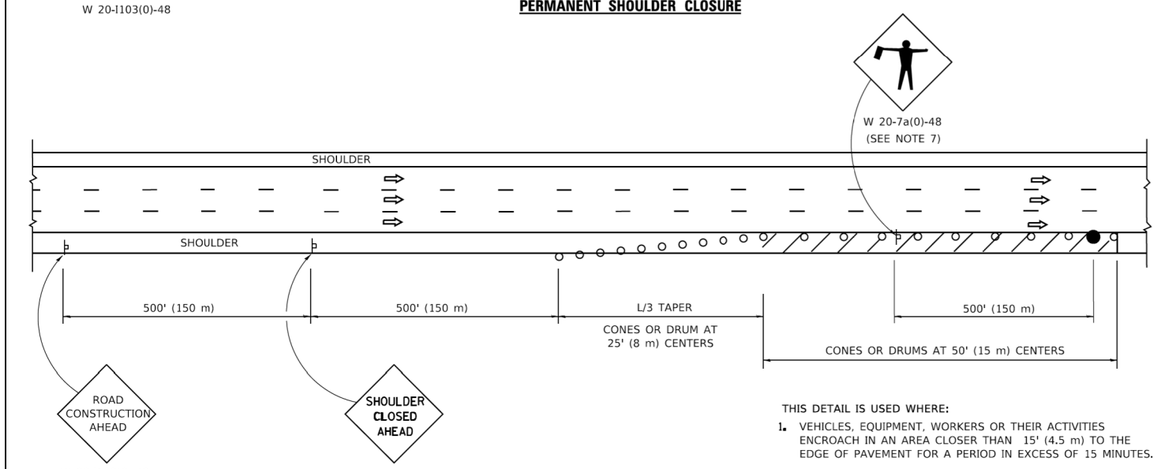

DAYTIME SHOULDER CLOSURE

THIS DETAIL IS USED WHERE:

1. VEHICLES, EQUIPMENT, WORKERS OR THEIR ACTIVITIES ENCROACH IN AN AREA CLOSER THAN 15' (4.5 m) TO THE EDGE OF PAVEMENT FOR A PERIOD IN EXCESS OF 15 MINUTES.

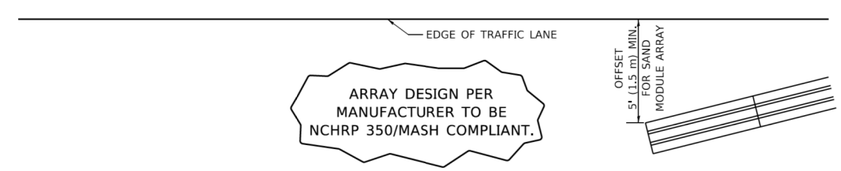

DETAIL "A"
IMPACT ATTENTUATOR, TEMPORARY
(SEE NOTE 5)

SYMBOLS

- ACTIVE WORK AREA
- SIGN ON PORTABLE OR PERMANENT SUPPORT
- FLAGGER WITH CONTROL SIGN
- TYPE II BARRICADE OR DRUM
- CONE, DRUM OR BARRICADE
- IMPACT ATTENUATOR OF TYPE AND TEST LEVEL SPECIFIED

GENERAL NOTES:

1. THE "L" DISTANCE EQUALS:

SPEED LIMIT	FORMULAS METRIC	FORMULAS ENGLISH
45 mph (80 km/h) OR GREATER:	L=0.65(W)(S)	L=(W)(S)

W = WIDTH OF OFFSET IN FEET (METERS)
S = NORMAL POSTED SPEED MPH (KM/H)

2. TYPE II BARRICADES OR DRUMS ARE REQUIRED FOR ALL NIGHTTIME CLOSURES. TYPE II BARRICADES OR DRUMS WITH MONODIRECTIONAL STEADY BURN LIGHTS ARE REQUIRED FOR DELINEATING OBSTICLES, EXCAVATIONS, OR HAZARDS EXCEEDING 100 FT (30m) IN LENGTH AT NIGHT.
3. ALL SIGNS SHALL BE POST MOUNTED IF THE CLOSURE TIME EXCEEDS FOUR DAYS.
4. FLASHING LIGHTS SHALL BE USED DURING THE HOURS OF DARKNESS AND SHALL BE INSTALLED ABOVE THE FIRST TWO SETS OF SIGNS.
5. THE IMPACT ATTENTUATOR, TEMPORARY IS NOT REQUIRED WHEN THE TEMPORARY CONCRETE BARRIER WALL IS PROTECTED BY OR IS TIED INTO THE EXISTING GUARDRAIL. IF OFFSET IS LESS THAN 5 FEET USE NARROW USE TYPE DEVICE TO MEET NCHRP350/MASH.
6. AUTHORIZATION FROM THE DISTRICT'S BUREAU OF TRAFFIC IS REQUIRED FOR ALL FREEWAY CLOSURES.
7. THE FLAGGER AND FLAGGER SIGN ARE REQUIRED AT THE ABOVE WORK SITES WHEN:
   a. FOUR OR MORE WORK VEHICLES ENTER THE TRAFFIC LANES IN A ONE HOUR PERIOD.
   b. THE WORK AVTIVITY REQUIRES FREQUENT ENCROACHMENT INTO THE LANE OPEN TO TRAFFIC.

   THE FLAGGER SHALL BE STATIONED APPROXIMATELY 100' (30 m) TO 200' (60 m) IN ADVANCE OF THE WORKERS.
8. 12' MIN. WIDTH TANGENT SECTION
   16' MIN. WIDTH CURVE SECTION.

ALL DIMENSIONS ARE IN INCHES (MILLIMETERS) UNLESS OTHERWISE SHOWN.

MODEL: Default
FILE NAME: pw:\\IL084EBIDINTEG.illinois.gov:PWIDOT\Documents\IDOT Offices\District 1\Projects\DistStd22x34\CADData\CADsheets\tc17.dgn

USER NAME = footemj	DESIGNED -	REVISED -	S.P.B. 01-07	STATE OF ILLINOIS DEPARTMENT OF TRANSPORTATION
	DRAWN - D.W.S.	REVISED -	S.P.B. 12-09	
PLOT SCALE = 50.0000 ' / in.	CHECKED -	REVISED -	M.D. 06-13	
PLOT DATE = 3/4/2019	DATE - 11-96	REVISED -	M.D. 01-18	

TRAFFIC CONTROL DETAILS FOR FREEWAY SHOULDER CLOSURES AND PARTIAL RAMP CLOSURES

SCALE: NONE | SHEET 1 OF 1 SHEETS | STA. TO STA.

F.A.I. RTE.	SECTION	COUNTY	TOTAL SHEETS	SHEET NO.
94	(42-B-11-1) BR, BJR 24	COOK	761	749
	TC-17	CONTRACT NO. 62W87		
		ILLINOIS FED. AID PROJECT		

tc17.dgn 3/4/2019 10:41:43 AM User=footemj

SIGNING FOR FLAGGING OPERATIONS AT WORK ZONE OPENINGS

WORK ZONE EXIT OPENING

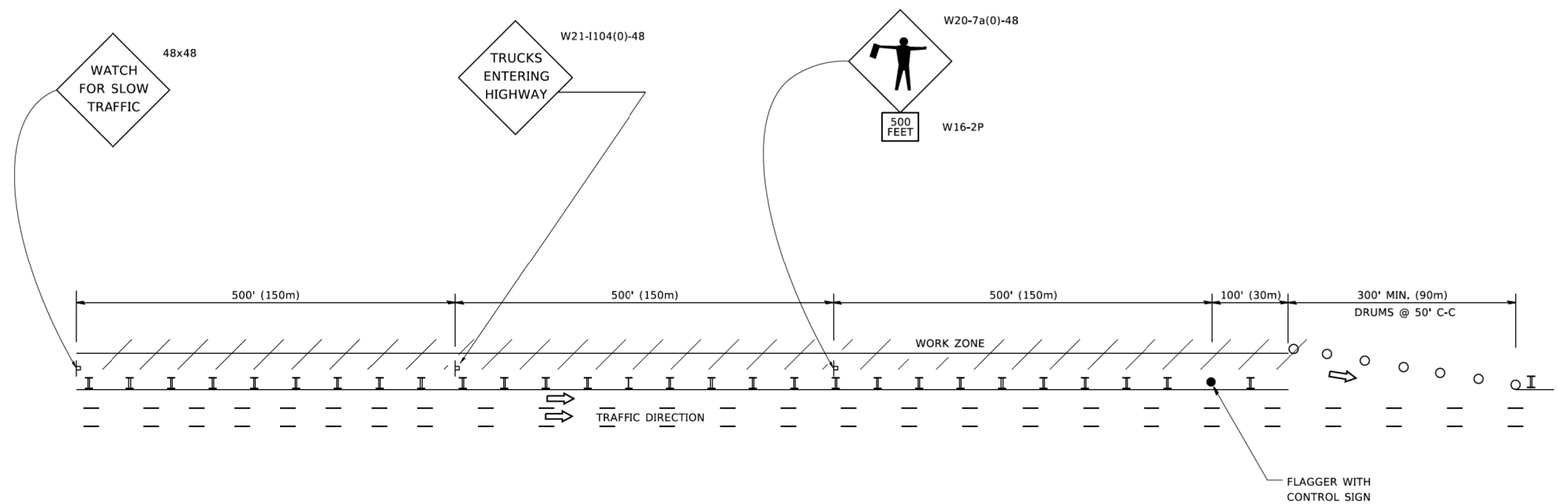

WORK ZONE ENTRY OPENING

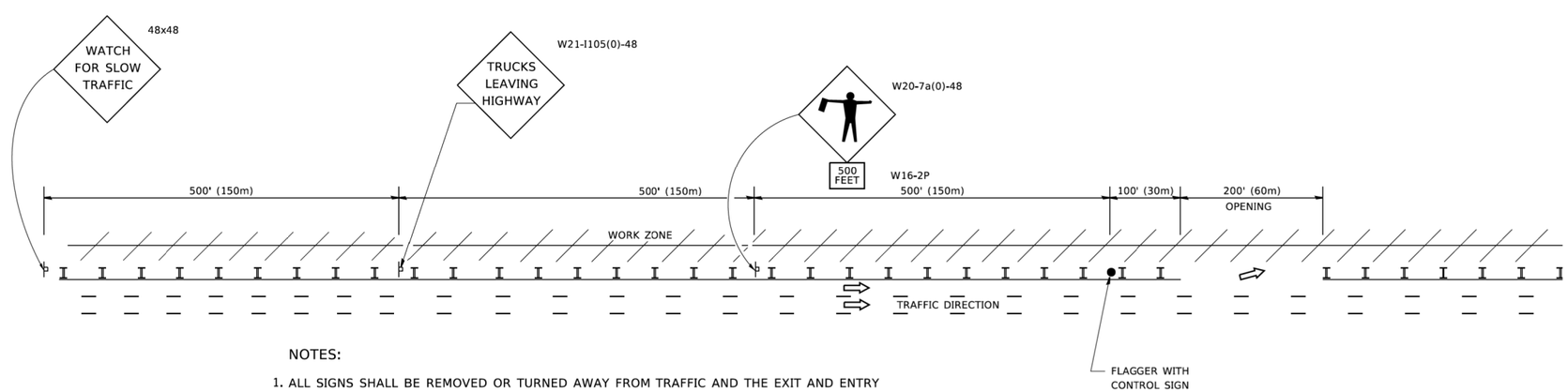

NOTES:

1. ALL SIGNS SHALL BE REMOVED OR TURNED AWAY FROM TRAFFIC AND THE EXIT AND ENTRY OPENINGS SHALL BE CLOSED WHEN THE FLAGGING OPERATION CEASES. NON OPERATING EQUIPMENT SHALL COMPLY WITH ARTICLE 701.11
2. WORK ZONE OPENINGS SHALL BE A MINIMUM OF ONE HALF MILE APART AND A MINIMUM OF ONE QUARTER MILE FROM ALL ENTRANCE AND EXIT RAMPS.
3. EXITING THE WORK ZONE AT ANY PLACE OTHER THAN AT A WORK ZONE EXIT OPENING WILL BE PROHIBITED.
4. ALL VEHICLES SHALL ENTER THE WORK ZONE AT ENTRY OPENINGS, USING THEIR TURN SIGNALS TO WARN MOTORISTS
5. FLAGGERS SHALL NOT STOP TRAFFIC OR DIRECT TRAFFIC INTO AN ADJACENT LANE.

ALL DIMENSIONS ARE IN INCHES (MILLIMETERS) UNLESS OTHERWISE SHOWN

USER NAME = footemj	DESIGNED -	REVISED -	J.A.F. 02-06
	DRAWN -	REVISED -	S.P.B. 01-07
PLOT SCALE = 50.0000 ' / in.	CHECKED -	REVISED -	S.P.B. 12-09
PLOT DATE = 3/4/2019	DATE -	REVISED -	M.D.06-13

STATE OF ILLINOIS
DEPARTMENT OF TRANSPORTATION

FREEWAY /EXPRESSWAY SIGNING FOR FLAGGING OPERATIONS AT WORK ZONE OPENINGS ON FREEWAYS /EXPRESSWAYS

SCALE: NONE | SHEET 1 OF 1 SHEETS | STA. TO STA.

F.A.I. RTE.	SECTION	COUNTY	TOTAL SHEETS	SHEET NO.
94	(42-B-11-1) BR, BJR 24	COOK	761	750
	TC-18	CONTRACT NO. 62W87		
		ILLINOIS	FED. AID PROJECT	

MODEL: Default
FILE NAME: pw:\\IL084EBIDINTEG.illinois.gov:PWIDOT\Documents\IDOT Offices\District 1\Projects\DistStd22x34\CADData\CADsheets\tc18.dgn

tc18.dgn 3/4/2019 10:44:51 AM User=footemj

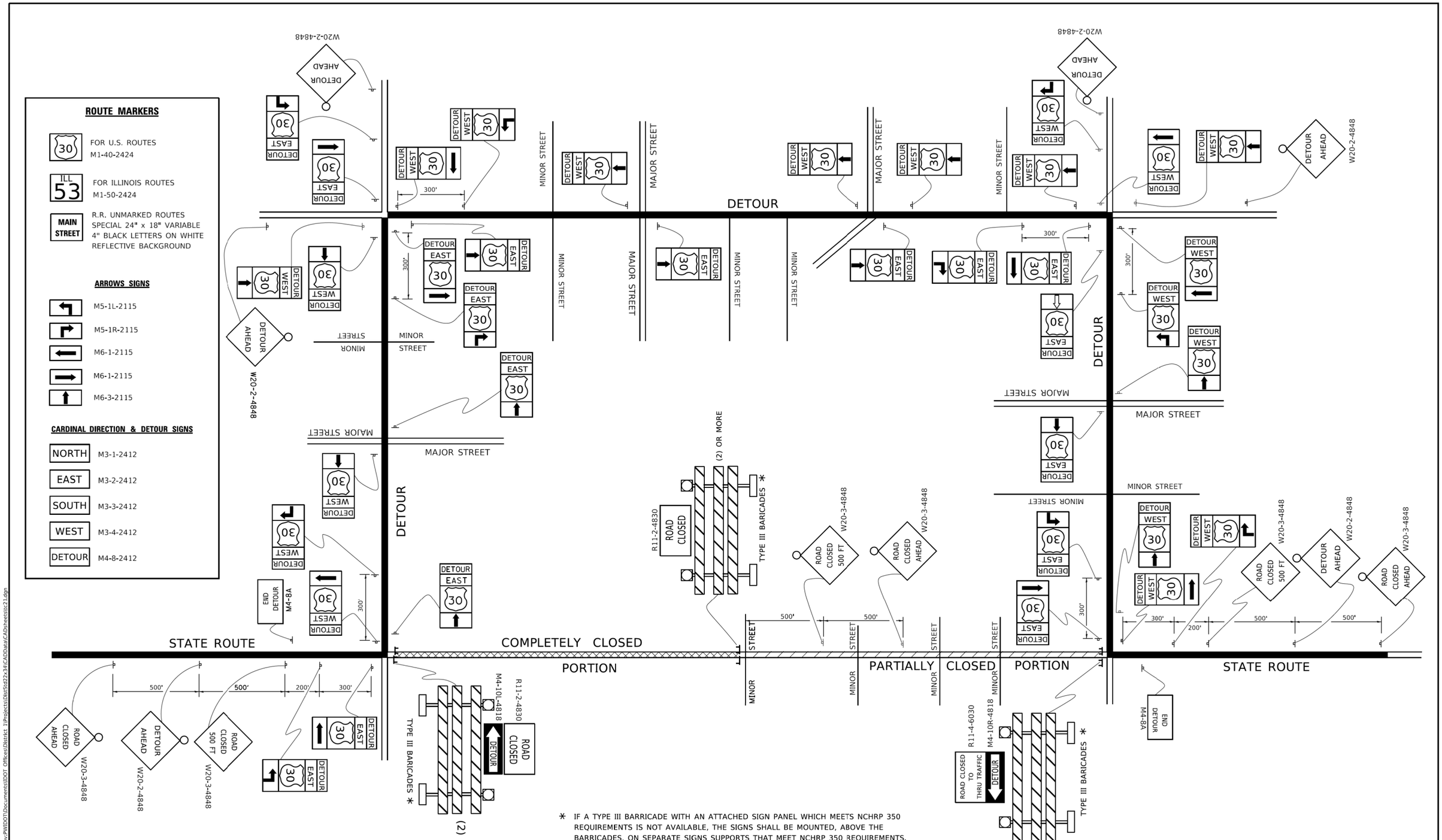

* IF A TYPE III BARRICADE WITH AN ATTACHED SIGN PANEL WHICH MEETS NCHRP 350 REQUIREMENTS IS NOT AVAILABLE, THE SIGNS SHALL BE MOUNTED, ABOVE THE BARRICADES, ON SEPARATE SIGNS SUPPORTS THAT MEET NCHRP 350 REQUIREMENTS.

USER NAME = footemj	DESIGNED -	REVISED - 10-18-02	
	DRAWN -	REVISED - R. BORO 09-14-09	
PLOT SCALE = 50.0000 ' / in.	CHECKED -	REVISED -	
PLOT DATE = 3/4/2019	DATE -	REVISED -	

STATE OF ILLINOIS
DEPARTMENT OF TRANSPORTATION

DETOUR SIGNING FOR CLOSING STATE HIGHWAYS

SCALE: NONE | SHEET 1 OF 1 SHEETS | STA. TO STA.

F.A.I. RTE.	SECTION	COUNTY	TOTAL SHEETS	SHEET NO.
94	(42-B-11-1) BR, BJR 24	COOK	761	751
	TC–21	CONTRACT NO. 62W87		
		ILLINOIS FED. AID PROJECT		

MODEL: Default
FILE NAME: pw:\\IL084EBIDINTEG.illinois.gov:PWIDOT\Documents\IDOT Offices\District 1\Projects\DistStd22x34\CADdata\CADsheets\tc21.dgn

tc21.dgn 3/4/2019 10:46:33 AM User=footemj

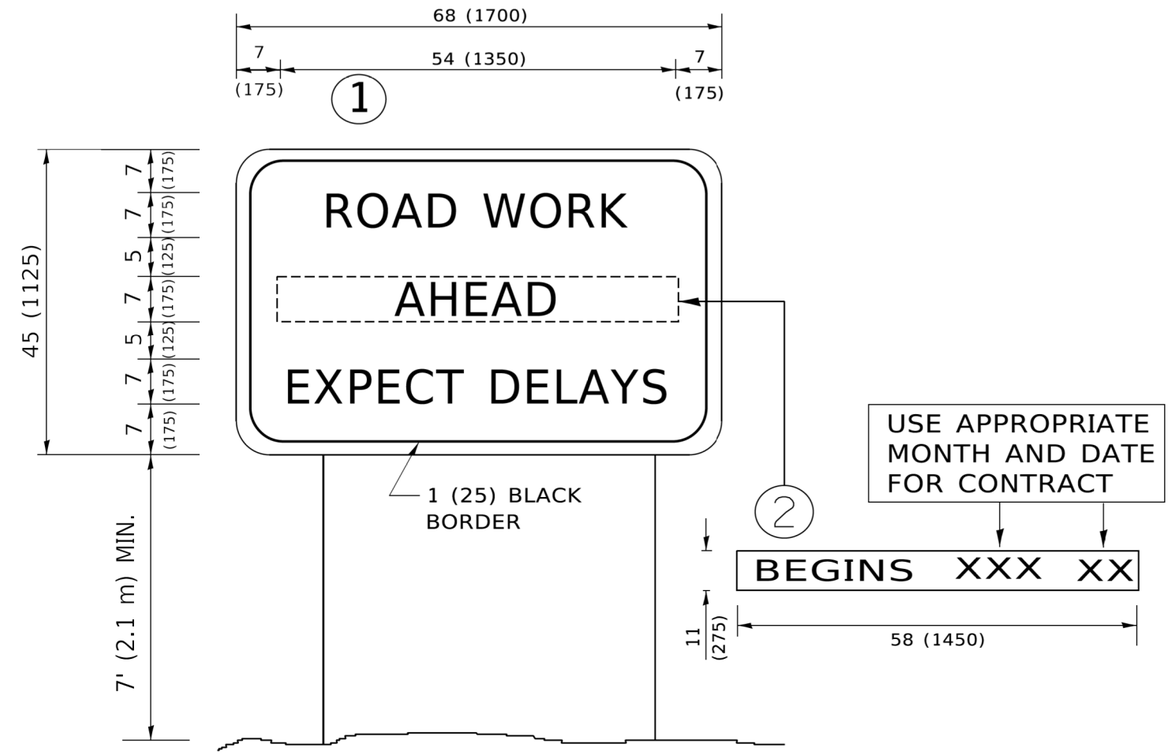

NOTES:

1. USE BLACK LETTERING ON ORANGE BACKGROUND.
2. ERECT SIGNS IN ADVANCE OF THE LOCATION FOR THE "ROAD CONSTRUCTION AHEAD" SIGN AT LOCATIONS AS DIRECTED BY THE ENGINEER.
3. ERECT SIGN (1) WITH INSTALLED PANEL (2) ONE WEEK PRIOR TO THE START OF CONSTRUCTION.
4. REMOVE PANEL (2) SOON AFTER THE START OF CONSTRUCTION.
5. SEE SPECIAL PROVISION FOR "TEMPORARY INFORMATION SIGNING" FOR ADDITIONAL INFORMATION.
6. ONE SIGN ASSEMBLY EQUALS 25.70 SQ. FT. (2.3 SQ. M.)
7. SHALL BE PAID FOR AS TEMPORARY INFORMATION SIGNING.

ALL DIMENSIONS ARE IN INCHES (MILLIMETERS) UNLESS OTHERWISE SHOWN.

MODEL: Default
FILE NAME: pw:\\IL084EBIDINTEG.illinois.gov:PWIDOT\Documents\IDOT Offices\District 1\Projects\DistStd22x34\CADData\CADsheets\tc22.dgn

USER NAME = footemj	DESIGNED -	REVISED -	R. MIRS 09-15-97
	DRAWN -	REVISED -	R. MIRS 12-11-97
PLOT SCALE = 50.0000 ' / in.	CHECKED -	REVISED -	T. RAMMACHER 02-02-99
PLOT DATE = 3/4/2019	DATE -	REVISED -	C. JUCIUS 01-31-07

STATE OF ILLINOIS
DEPARTMENT OF TRANSPORTATION

ARTERIAL ROAD INFORMATION SIGN

SCALE: NONE | SHEET 1 OF 1 SHEETS | STA. | TO STA.

F.A.I. RTE.	SECTION	COUNTY	TOTAL SHEETS	SHEET NO.
94	(42-B-11-1) BR, BJR 24	COOK	761	752
	TC–22	CONTRACT NO. 62W87		
	ILLINOIS	FED. AID PROJECT		

tc22.dgn 3/4/2019 10:48:10 AM User=footemj

CENTER LANE CLOSURE

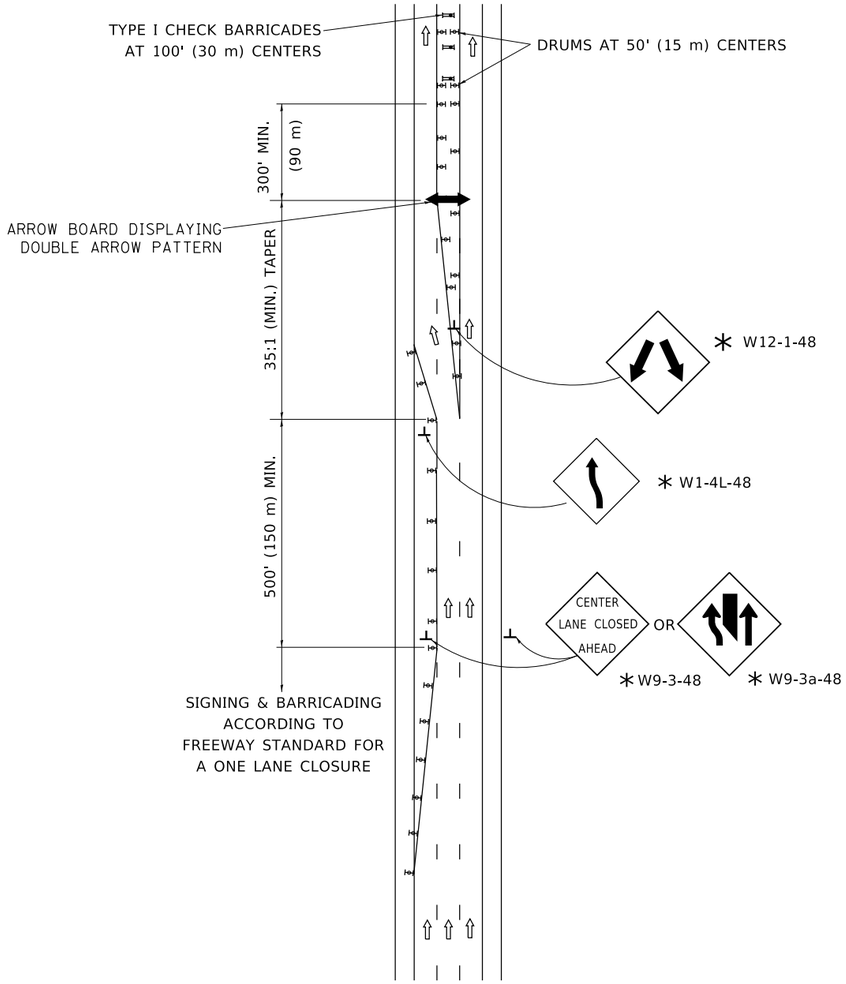

INSTALLATION SEQUENCE

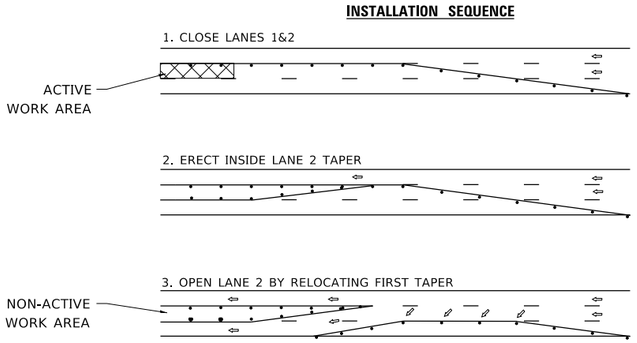

4. REMOVE CLOSURE IN REVERSE ORDER

NOTES:

1. DRUMS WITH STEADY BURN LIGHTS SHALL BE USED AT 50' (15 m) CENTERS ON ALL TAPERS AND TANGENTS IN ADVANCE OF WORK AREA.
2. CLOSURE SHALL BE USED ONLY FOR OPERATIONS LASTING 72 HOURS OR LESS.
3. CENTER LANE CLOSURE CONFIGURATION IS NOT TO BE USED WITH WORKERS PRESENT.

SHOULDER LANE

NOTE:
CLOSURE SHALL BE USED ONLY FOR OPERATIONS LASTING 72 HOURS OR LESS.

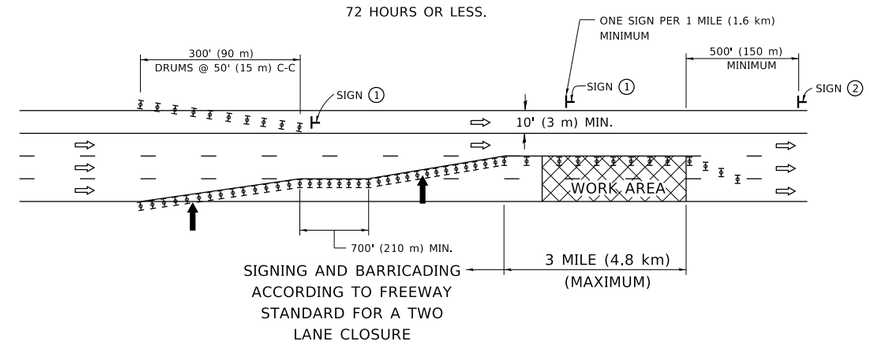

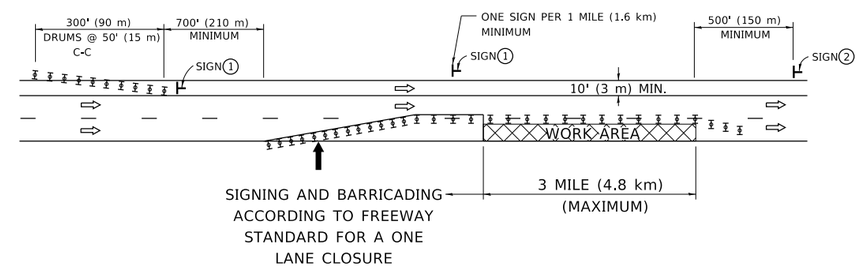

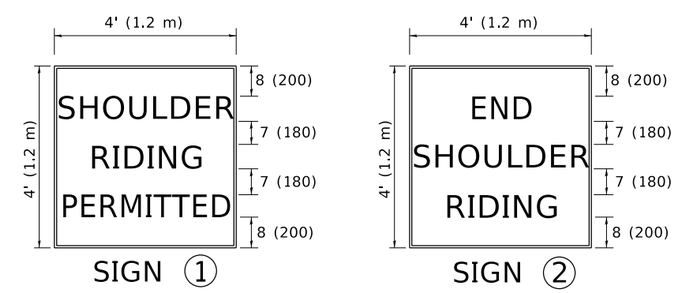

6 (150) SERIES "C" LEGEND
BLACK LEGEND
WHITE REFLECT. BACKGROUND
1 (25) BORDER

SYMBOLS

- DIRECTION OF TRAFFIC
- ARROWBOARD
- ACTIVE WORK AREA
- SIGN ON PORTABLE OR PERMANENT SUPPORT *
- TYPE II BARRICADE, OR DRUM WITH MONO-DIRECTIONAL STEADY BURN LIGHT

ALL DIMENSIONS ARE IN INCHES (MILLIMETERS) UNLESS OTHERWISE SHOWN

* ALL SIGNS SHALL BE MOUNTED AT A MINIMUM HEIGHT OF 5' (1.5 m).

MODEL: Default
FILE NAME: pw:\\IL084EBIDINTEG.illinois.gov:PWIDOT\Documents\IDOT Offices\District 1\Projects\DistStd22x34\CADData\CADsheets\tc25.dgn

USER NAME = footemj	DESIGNED -	REVISED -	J.A.F. 04-03
	DRAWN -	REVISED -	S.P.B. 01-07
PLOT SCALE = 50.0000 ' / in.	CHECKED -	REVISED -	S.P.B. 12-09
PLOT DATE = 3/4/2019	DATE -	REVISED -	

STATE OF ILLINOIS
DEPARTMENT OF TRANSPORTATION

TRAFFIC CONTROL DETAILS FOR FREEWAY
CENTER LANE CLOSURE SHOULDER LANE

SCALE: NONE | SHEET 1 OF 1 SHEETS | STA. TO STA.

F.A. RTE.	SECTION	COUNTY	TOTAL SHEETS	SHEET NO.
			761	752A
TC–25		CONTRACT NO.		
		ILLINOIS	FED. AID PROJECT	

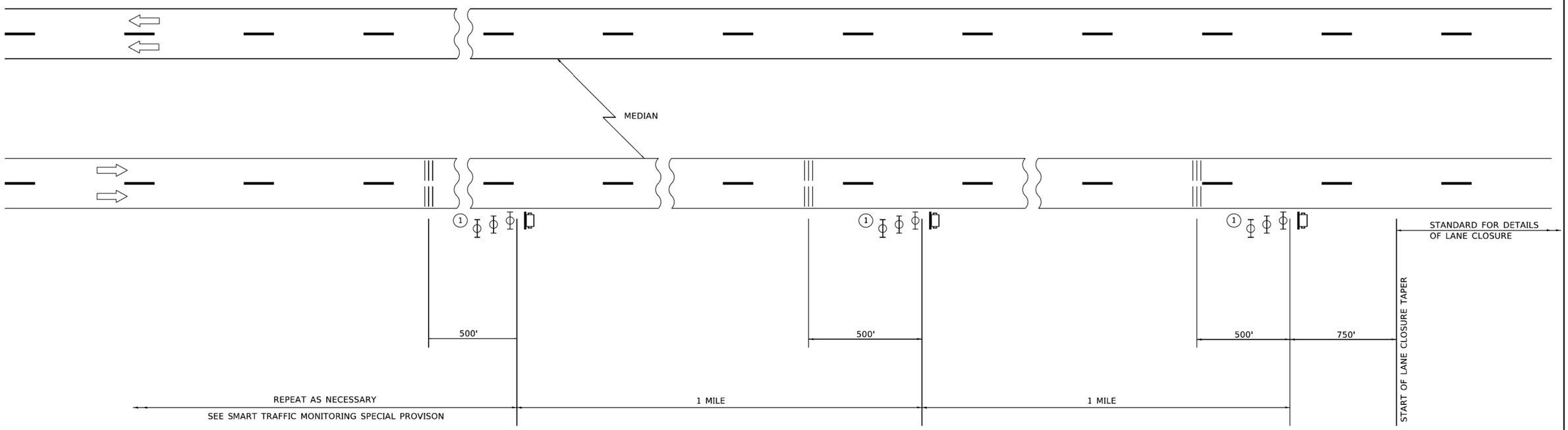

SYMBOLS

PORTABLE CHANGEABLE MESSAGE SIGN

TEMPORARY RUMBLE STRIP (SPECIAL)

TYPE II BARRICADES, DRUMS, OR VERTICAL BARRICADES WITH MONODIRECTIONAL FLASHING LIGHT.

(1) THREE TYPE II BARRICADES, DRUMS, OR VERTICAL BARRICADES AT 25' (8 m) CENTERS.

GENERAL NOTE:

THIS DETAIL IS TO BE USED IN CONJUNCTION WITH SMART TRAFFIC MONITORING SYSTEM AND TEMPORARY RUMBLE STRIP (SPECIAL) SPECIAL PROVISIONS.

TRAFFIC CONTROL SHOWN IN THIS DETAIL IS TO BE PROVIDED IN ADDITION TO ANY TEMPORARY TRAFFIC CONTROL SHOWN ON STATE STANDARDS, DISTRICT DETAILS, AND MAINTENANCE OF TRAFFIC PLANS.

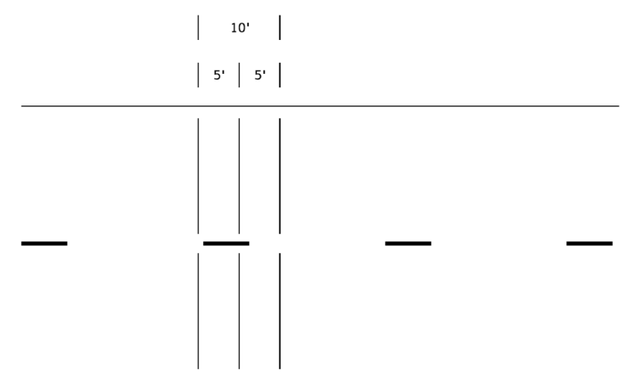

TEMPORARY RUMBLE STRIP (SPECIAL)

MODEL: Default
FILE NAME: pw:\\ildot-pw.bentley.com:PWIDOT\Documents\IDOT Offices\District 1\Projects\DistStd22x34\CADData\CADsheets\tc33.dgn

USER NAME = Lawrence.DeManche	DESIGNED -	REVISED - K. SMITH 11-18-22	
	DRAWN -	REVISED -	
PLOT SCALE = 100.0000 ' / in.	CHECKED -	REVISED -	
PLOT DATE = 11/18/2022	DATE -	REVISED -	

STATE OF ILLINOIS
DEPARTMENT OF TRANSPORTATION

SMART TRAFFIC MONITORING SYSTEM
TYPICAL LAYOUT

SCALE: NONE | SHEET 1 OF 1 SHEETS | STA. TO STA.

F.A.I. RTE.	SECTION	COUNTY	TOTAL SHEETS	SHEET NO.
94	(42-B-11-1) BR, BJR 24	COOK	761	753
	TC-33	CONTRACT NO. 62W87		
		ILLINOIS FED. AID PROJECT		

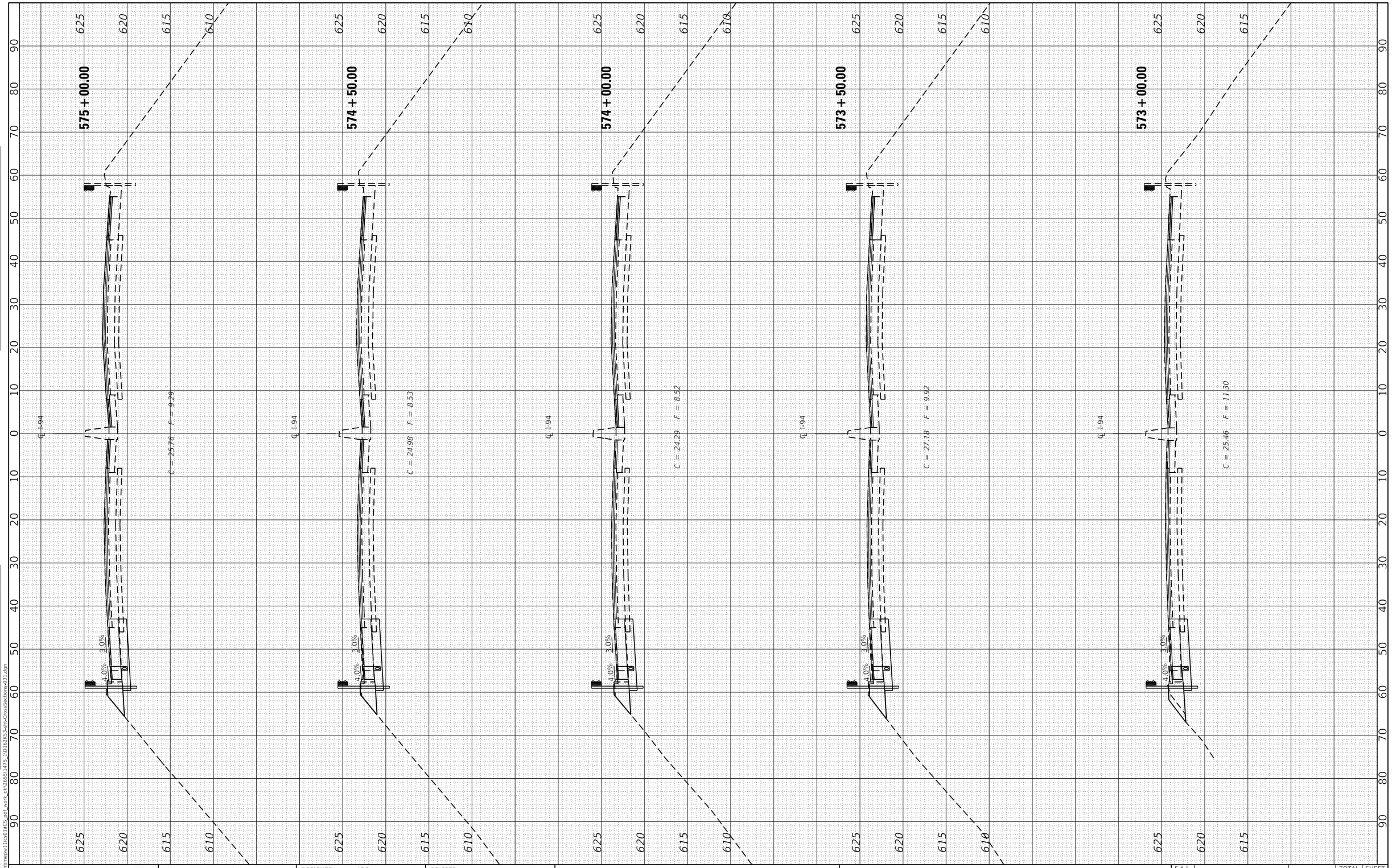

FINAL SURVEY		BY	DATE
NOTE BOOK NO.	SURVEYED		
	PLOTTED		
	TEMPLATE		
	AREAS		
	AREAS CHECKED		

ORIGINAL SURVEY		BY	DATE
NOTE BOOK NO.	SURVEYED		
	PLOTTED		
	TEMPLATE		
	AREAS		
	AREAS CHECKED		

MODEL: Default
FILE NAME: \\bhmepw11ics01\ICS pdf work dir\26551\4475_1\D162K53-elt-CrossSections-001.dgn

HBM ENGINEERING GROUP, LLC

USER NAME = hbmepw11ics01$	DESIGNED - ADS	REVISED -	
	DRAWN - ADS	REVISED -	
PLOT SCALE = 20.0000 ' / in.	CHECKED - AMI	REVISED -	
PLOT DATE = 1/24/2025	DATE - 12/9/2024	REVISED -	

STATE OF ILLINOIS
DEPARTMENT OF TRANSPORTATION

CROSS SECTIONS
WB US-6 TO WB I-94

SCALE: | SHEET 1 OF 8 SHEETS | STA. TO STA.

F.A.I. RTE.	SECTION	COUNTY	TOTAL SHEETS	SHEET NO.
94	(42-B-11-1) BR, BJR 24	COOK	761	754
		CONTRACT NO. 62W87		
		ILLINOIS	FED. AID PROJECT	

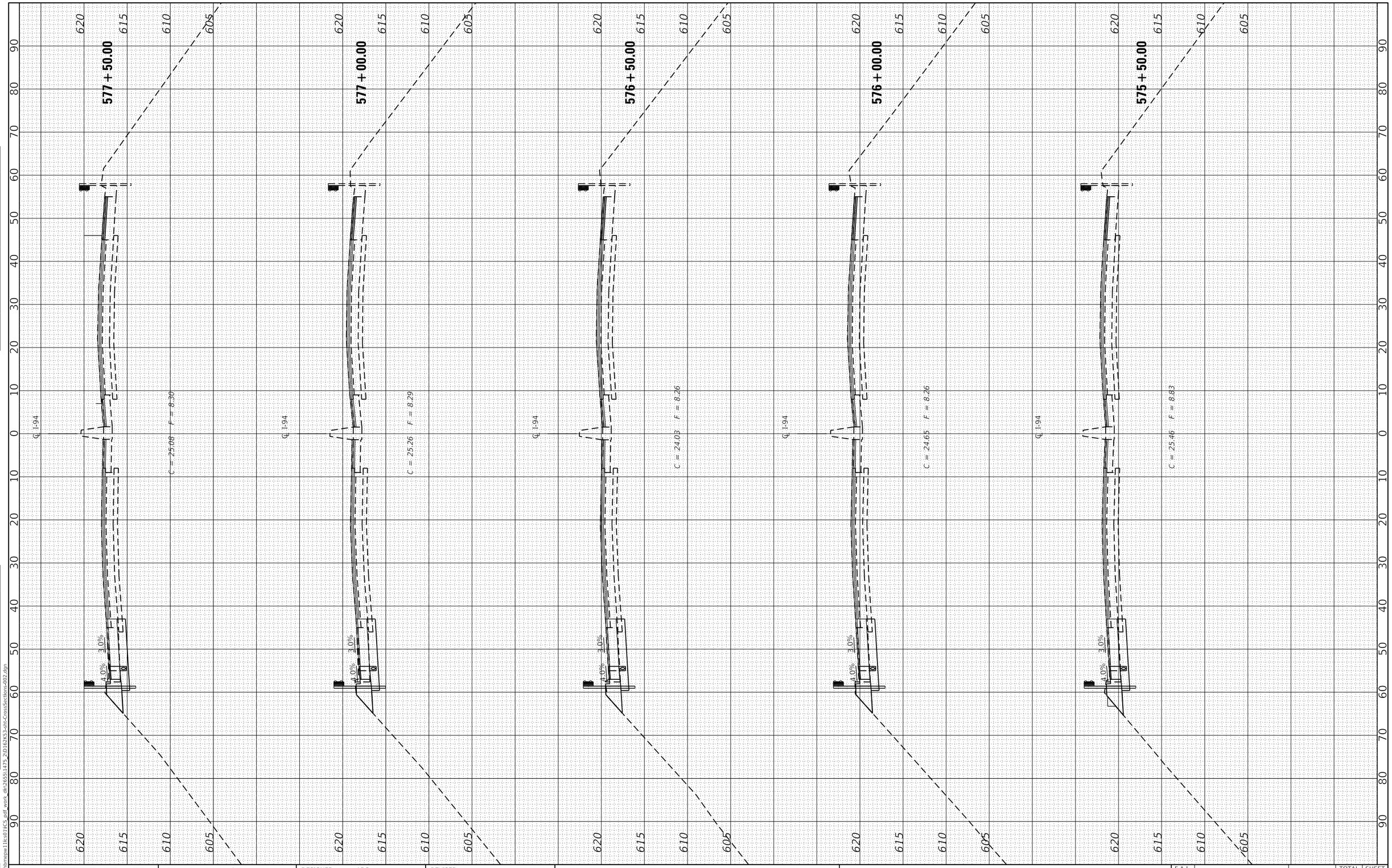

FINAL SURVEY	BY	DATE
SURVEYED		
PLOTTED		
TEMPLATE		
AREAS		
AREAS CHECKED		
NOTE BOOK NO.		

ORIGINAL SURVEY	BY	DATE
SURVEYED		
PLOTTED		
TEMPLATE		
AREAS		
AREAS CHECKED		
NOTE BOOK NO.		

MODEL: Default
FILE NAME: \\bhmepw11ics01\ICS pdf work dir\26551\4475_2\D162K53-elt-CrossSections-002.dgn

HBM ENGINEERING GROUP, LLC

USER NAME = hbmepw11ics01$	DESIGNED - ADS	REVISED -
	DRAWN - ADS	REVISED -
PLOT SCALE = 20.0000 ' / in.	CHECKED - AMI	REVISED -
PLOT DATE = 1/24/2025	DATE - 12/9/2024	REVISED -

STATE OF ILLINOIS
DEPARTMENT OF TRANSPORTATION

CROSS SECTIONS
WB US-6 TO WB I-94

SCALE: | SHEET 2 OF 8 SHEETS | STA. TO STA.

F.A.I. RTE.	SECTION	COUNTY	TOTAL SHEETS	SHEET NO.
94	(42-B-11-1) BR, BJR 24	COOK	761	755

CONTRACT NO. 62W87

ILLINOIS | FED. AID PROJECT

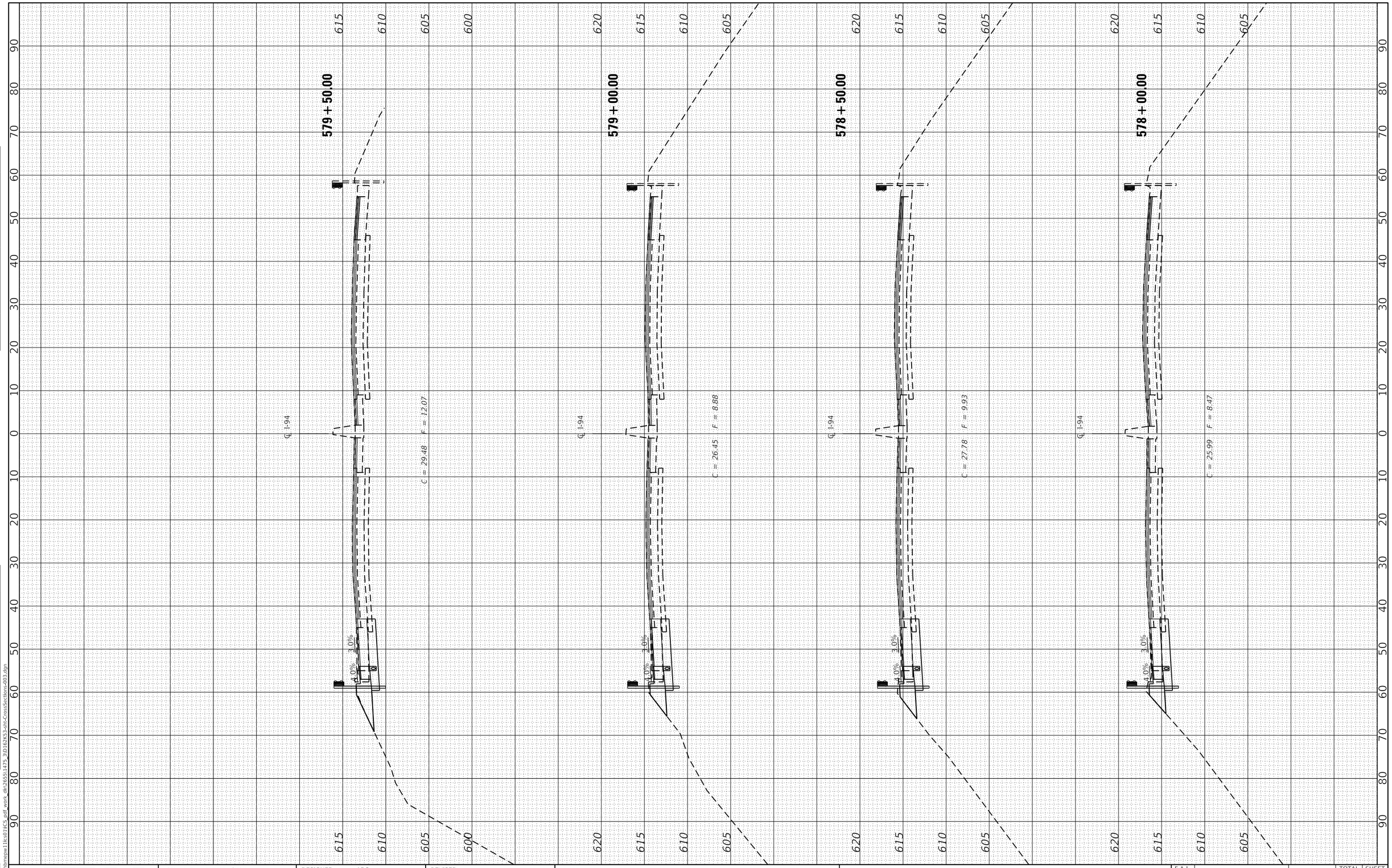

FINAL SURVEY		BY	DATE
NOTE BOOK	SURVEYED		
	PLOTTED		
	TEMPLATE		
	AREAS		
NO.	AREAS CHECKED		

ORIGINAL SURVEY		BY	DATE
NOTE BOOK	SURVEYED		
	PLOTTED		
	TEMPLATE		
	AREAS		
NO.	AREAS CHECKED		

MODEL: Default
FILE NAME: \\bhmepw11ics01\ICS pdf work dir\26551475_31D162K53-sht-CrossSections-003.dgn

HBM ENGINEERING GROUP, LLC

USER NAME = hbmepw11ics01$	DESIGNED - ADS	REVISED -
	DRAWN - ADS	REVISED -
PLOT SCALE = 20.0000 ' / in.	CHECKED - AMI	REVISED -
PLOT DATE = 1/24/2025	DATE - 12/9/2024	REVISED -

STATE OF ILLINOIS
DEPARTMENT OF TRANSPORTATION

CROSS SECTIONS
WB US-6 TO WB I-94

SCALE: | SHEET 3 OF 8 SHEETS | STA. TO STA.

F.A.I. RTE.	SECTION	COUNTY	TOTAL SHEETS	SHEET NO.
94	(42-B-11-1) BR, BJR 24	COOK	761	756
		CONTRACT NO. 62W87		
		ILLINOIS	FED. AID PROJECT	

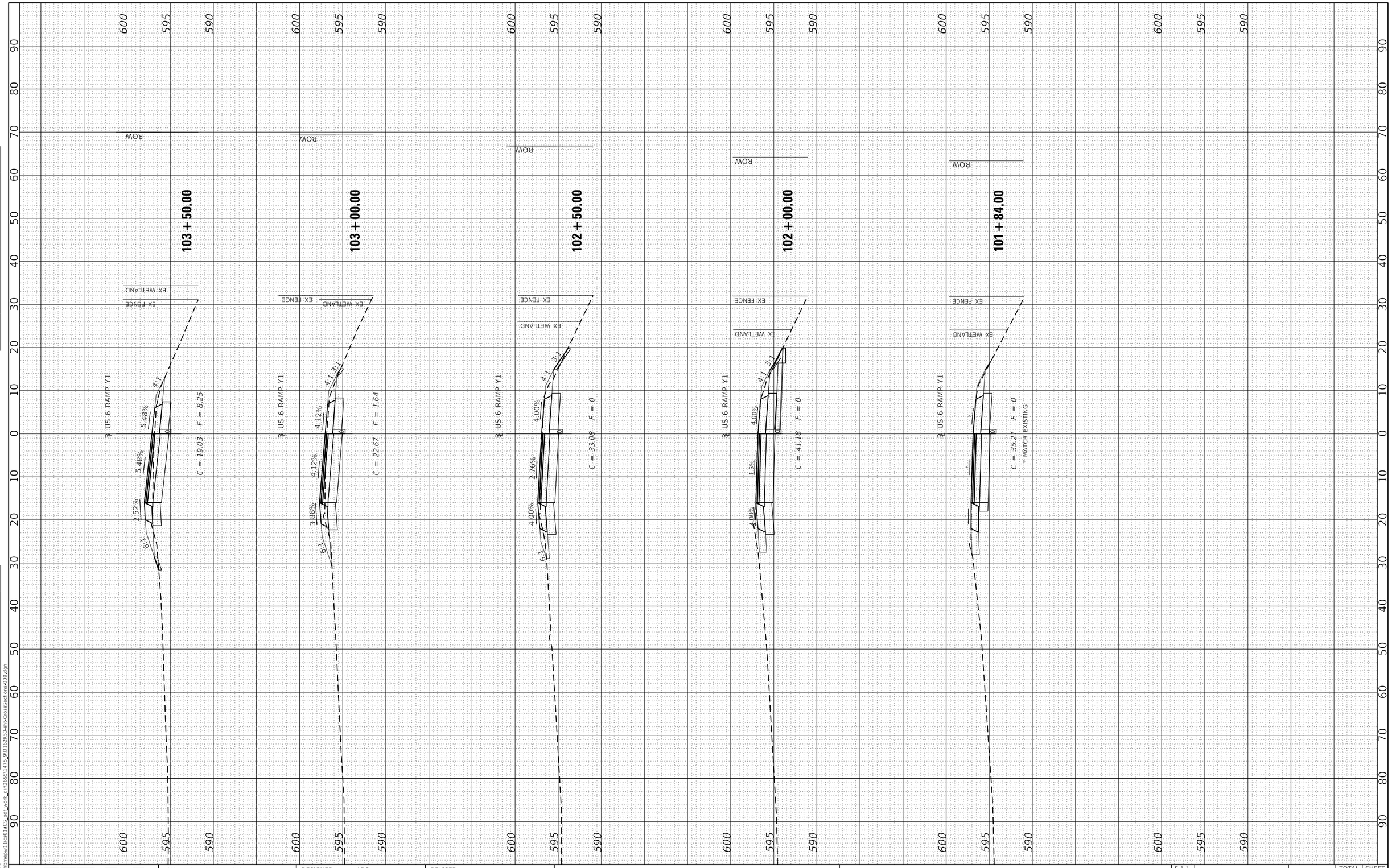

FINAL SURVEY		BY	DATE
NOTE BOOK	SURVEYED		
	PLOTTED		
	TEMPLATE		
	AREAS		
	AREAS CHECKED		
NO.			

ORIGINAL SURVEY		BY	DATE
NOTE BOOK	SURVEYED		
	PLOTTED		
	TEMPLATE		
	AREAS		
	AREAS CHECKED		
NO.			

MODEL: Default
FILE NAME: \\bhmepw11ics01\ICS pdf work dir\26551475 9\D102K53-sht-CrossSections-009.dgn

HBM ENGINEERING GROUP, LLC

USER NAME = hbmepw11ics01$	DESIGNED - ADS	REVISED -	
	DRAWN - ADS	REVISED -	
PLOT SCALE = 20.0000 ' / in.	CHECKED - AMI	REVISED -	
PLOT DATE = 1/24/2025	DATE - 12/9/2024	REVISED -	

STATE OF ILLINOIS
DEPARTMENT OF TRANSPORTATION

CROSS SECTIONS
WB US-6 TO WB I-94

SCALE: | SHEET 4 OF 8 SHEETS | STA. TO STA.

F.A.I. RTE.	SECTION	COUNTY	TOTAL SHEETS	SHEET NO.
94	(42-B-11-1) BR, BJR 24	COOK	761	757
		CONTRACT NO. 62W87		
		ILLINOIS	FED. AID PROJECT	

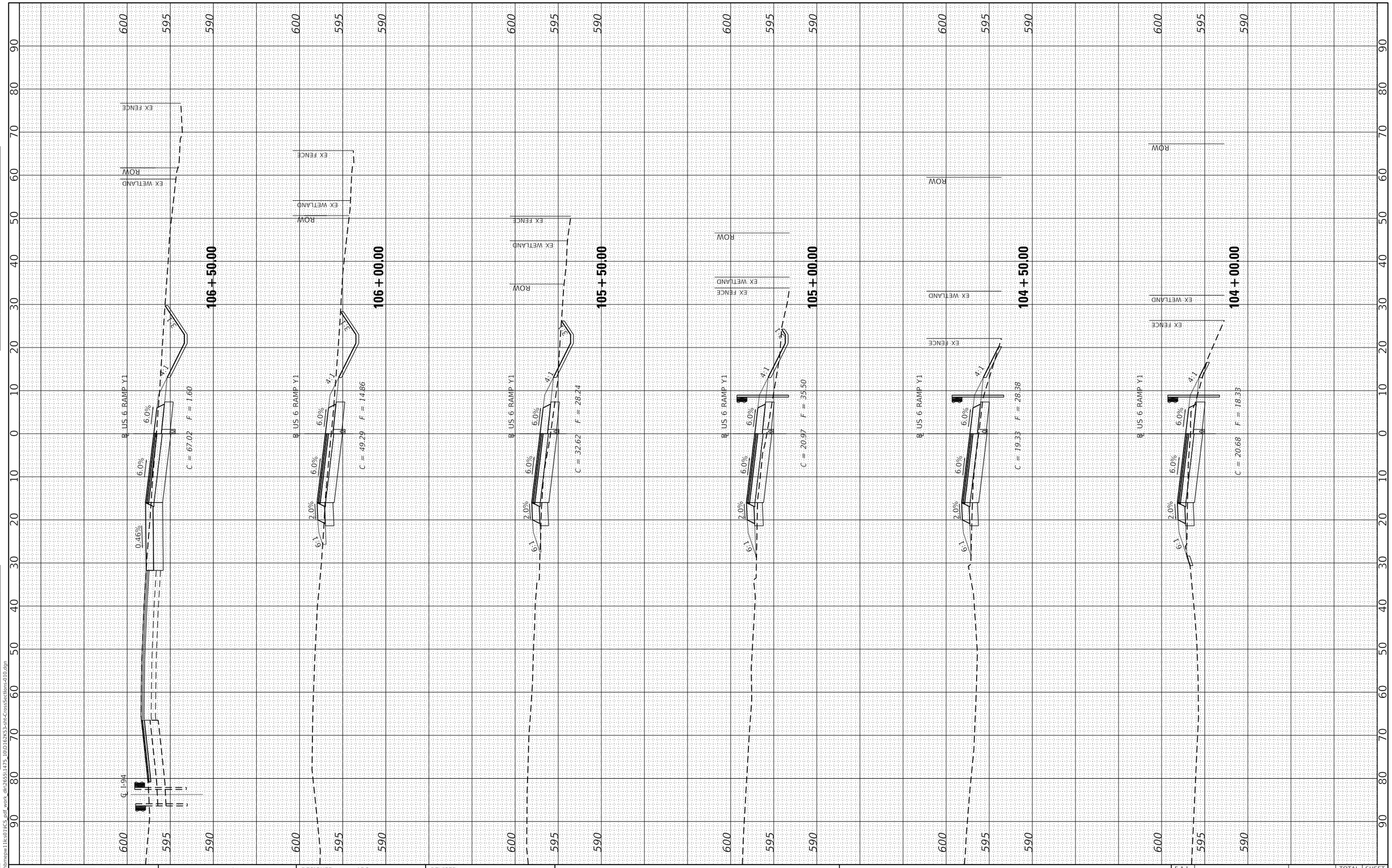

FINAL SURVEY	BY	DATE
SURVEYED		
PLOTTED		
TEMPLATE		
AREAS		
AREAS CHECKED		

NOTE BOOK NO.

ORIGINAL SURVEY	BY	DATE
SURVEYED		
PLOTTED		
TEMPLATE		
AREAS		
AREAS CHECKED		

NOTE BOOK NO.

MODEL: Default
FILE NAME: \\hbmepw11ic601\CS.pdf work dir\26551\1475_10\D162653-sht-CrossSections-010.dgn

HBM ENGINEERING GROUP, LLC

USER NAME = hbmepw11ics01$	DESIGNED - ADS	REVISED -
	DRAWN - ADS	REVISED -
PLOT SCALE = 20.0000 ' / in.	CHECKED - AMI	REVISED -
PLOT DATE = 1/24/2025	DATE - 12/9/2024	REVISED -

STATE OF ILLINOIS
DEPARTMENT OF TRANSPORTATION

CROSS SECTIONS
WB US-6 TO WB I-94

SCALE: | SHEET 5 OF 8 SHEETS | STA. | TO STA.

F.A.I. RTE.	SECTION	COUNTY	TOTAL SHEETS	SHEET NO.
94	(42-B-11-1) BR, BJR 24	COOK	761	758
		CONTRACT NO. 62W87		
		ILLINOIS FED. AID PROJECT		

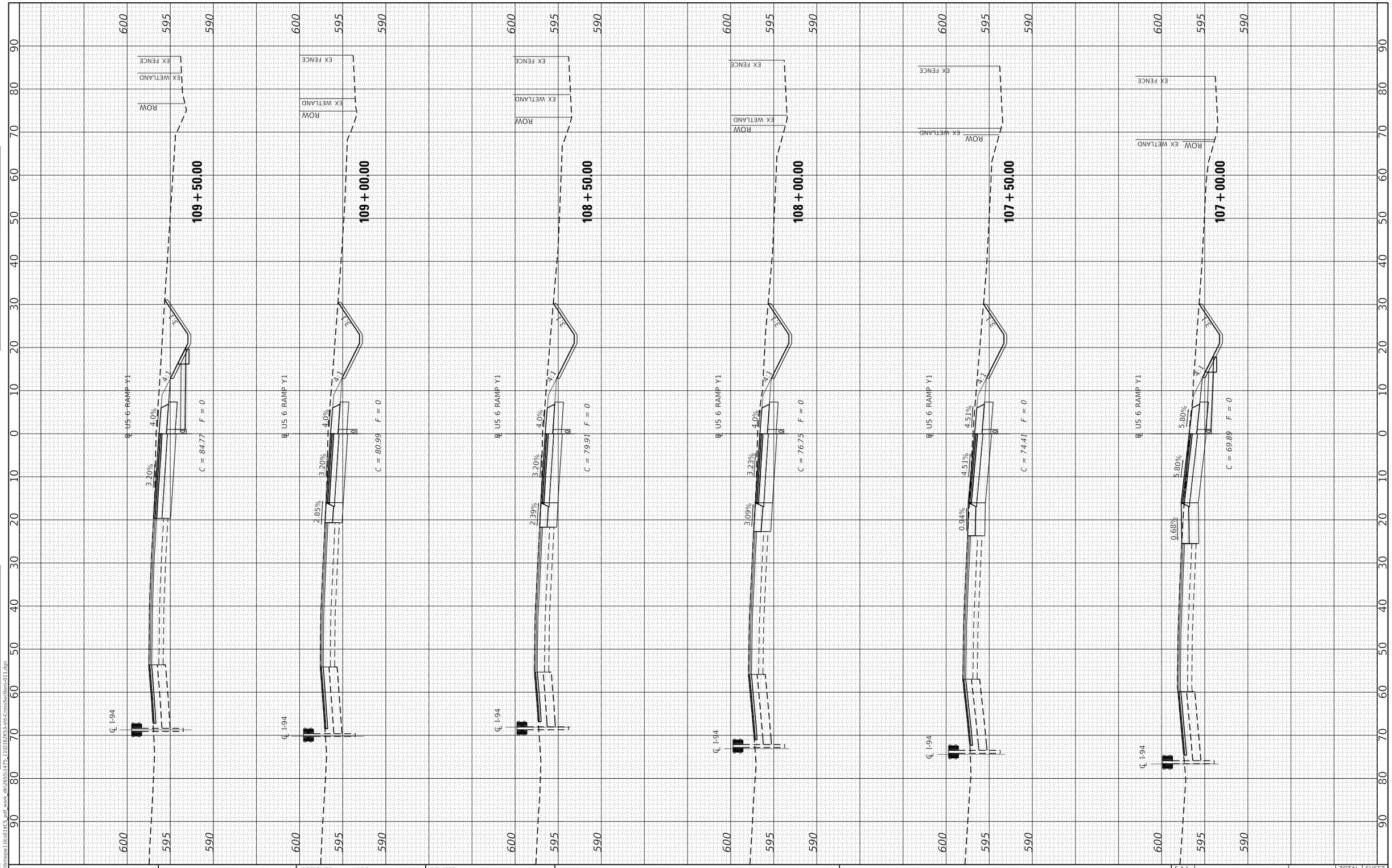

FINAL SURVEY	BY	DATE
SURVEYED		
PLOTTED		
TEMPLATE		
AREAS		
AREAS CHECKED		
NOTE BOOK NO.		

ORIGINAL SURVEY	BY	DATE
SURVEYED		
PLOTTED		
TEMPLATE		
AREAS		
AREAS CHECKED		
NOTE BOOK NO.		

MODEL: Default
FILE NAME: \\hbmepw11ics01\ICS pdf work dir\26551L475_11\D162K53-sht-CrossSections-011.dgn

HBM ENGINEERING GROUP, LLC

USER NAME = hbmepw11ics01$	DESIGNED - ADS	REVISED -
	DRAWN - ADS	REVISED -
PLOT SCALE = 20.0000 ' / in.	CHECKED - AMI	REVISED -
PLOT DATE = 1/24/2025	DATE - 12/9/2024	REVISED -

STATE OF ILLINOIS
DEPARTMENT OF TRANSPORTATION

CROSS SECTIONS
WB US-6 TO WB I-94

SCALE: | SHEET 6 OF 8 SHEETS | STA. TO STA.

F.A.I. RTE.	SECTION	COUNTY	TOTAL SHEETS	SHEET NO.
94	(42-B-11-1) BR, BJR 24	COOK	761	759
		CONTRACT NO. 62W87		
		ILLINOIS FED. AID PROJECT		

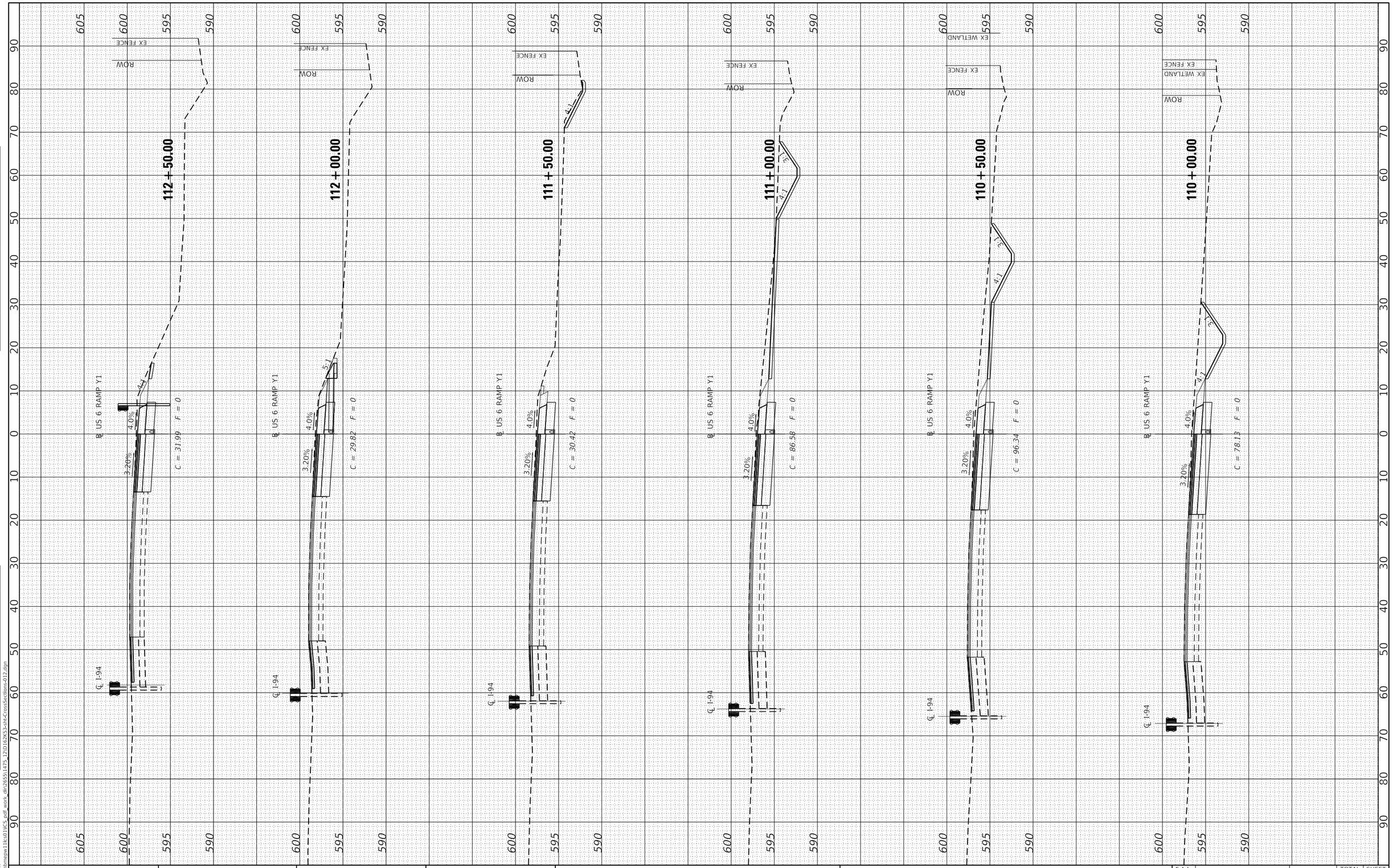

FINAL SURVEY	BY	DATE
SURVEYED		
PLOTTED		
TEMPLATE		
AREAS		
AREAS CHECKED		
NOTE BOOK		
NO.		

ORIGINAL SURVEY	BY	DATE
SURVEYED		
PLOTTED		
TEMPLATE		
AREAS		
AREAS CHECKED		
NOTE BOOK		
NO.		

MODEL: Default
FILE NAME: \\bhmepw11ics01\ICS pdf work dir\2655\1475_12\D162K53-sht-CrossSections-012.dgn

HBM ENGINEERING GROUP, LLC

USER NAME = hbmepw11ics01$	DESIGNED - ADS	REVISED -
	DRAWN - ADS	REVISED -
PLOT SCALE = 20.0000 ' / in.	CHECKED - AMI	REVISED -
PLOT DATE = 1/24/2025	DATE - 12/9/2024	REVISED -

STATE OF ILLINOIS
DEPARTMENT OF TRANSPORTATION

CROSS SECTIONS
WB US-6 TO WB I-94

SCALE: | SHEET 7 OF 8 SHEETS | STA. | TO STA.

F.A.I. RTE.	SECTION	COUNTY	TOTAL SHEETS	SHEET NO.
94	(42-B-11-1) BR, BJR 24	COOK	761	760
		CONTRACT NO. 62W87		
		ILLINOIS	FED. AID PROJECT	

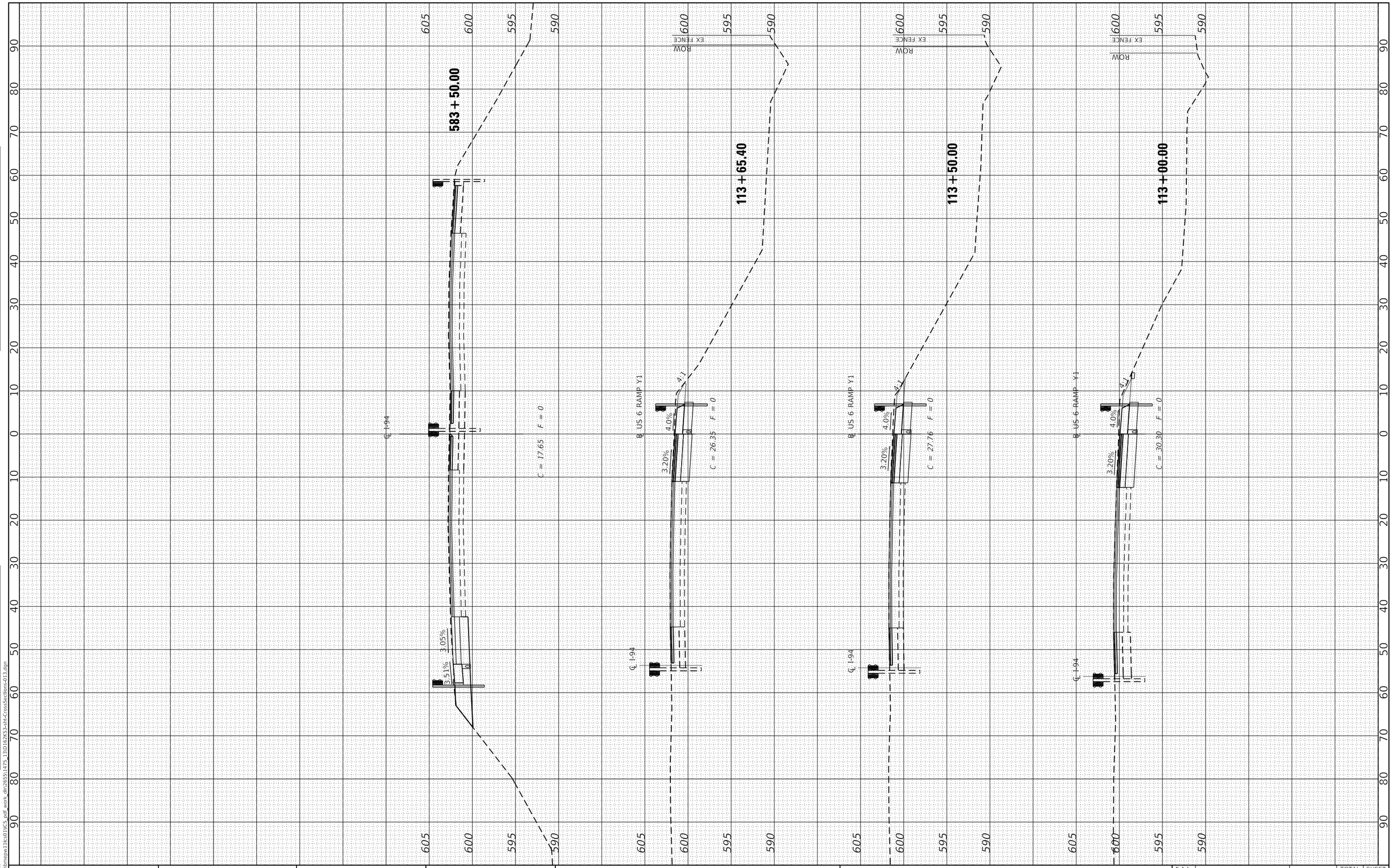

FINAL SURVEY	BY	DATE
SURVEYED		
PLOTTED		
TEMPLATE		
AREAS		
AREAS CHECKED		
NOTE BOOK NO.		

ORIGINAL SURVEY	BY	DATE
SURVEYED		
PLOTTED		
TEMPLATE		
AREAS		
AREAS CHECKED		
NOTE BOOK NO.		

MODEL: Default
FILE NAME: \\bhmepw11ics01\ICS_pdf_work_dir\2695\1475_13D162K3-sht-CrossSections-013.dgn

HBM ENGINEERING GROUP, LLC

USER NAME = hbmepw11ics01$	DESIGNED - ADS	REVISED -
	DRAWN - ADS	REVISED -
PLOT SCALE = 20.0000 ' / in.	CHECKED - AMI	REVISED -
PLOT DATE = 1/24/2025	DATE - 12/9/2024	REVISED -

STATE OF ILLINOIS
DEPARTMENT OF TRANSPORTATION

CROSS SECTIONS
WB US-6 TO WB I-94

SCALE: | SHEET 8 OF 8 SHEETS | STA. TO STA.

F.A.I. RTE.	SECTION	COUNTY	TOTAL SHEETS	SHEET NO.
94	(42-B-11-1) BR, BJR 24	COOK	761	761
		CONTRACT NO. 62W87		
		ILLINOIS FED. AID PROJECT		