FIBER COMMUNICATIONS SYSTEM TOPOLOGY

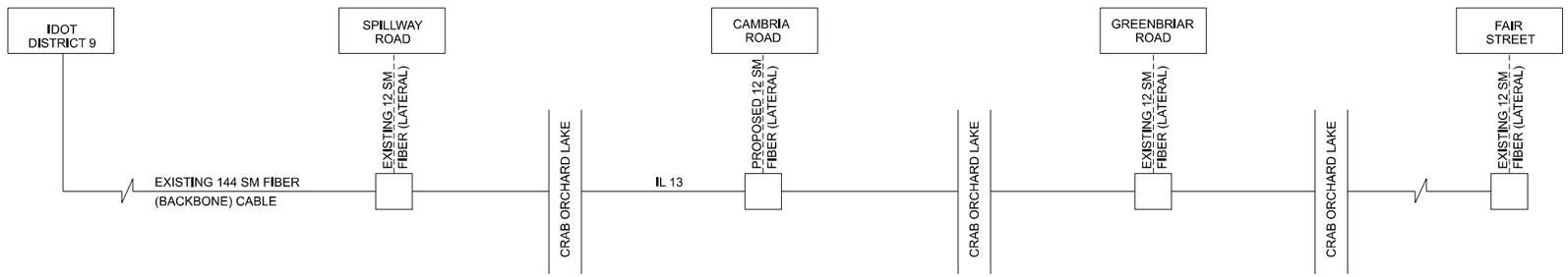

LEGEND

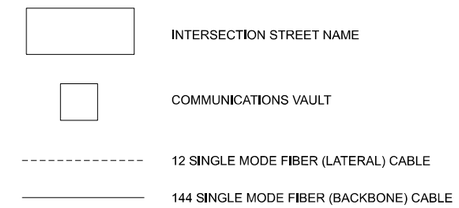

FIBER COMMUNICATIONS SYSTEM SCHEMATIC

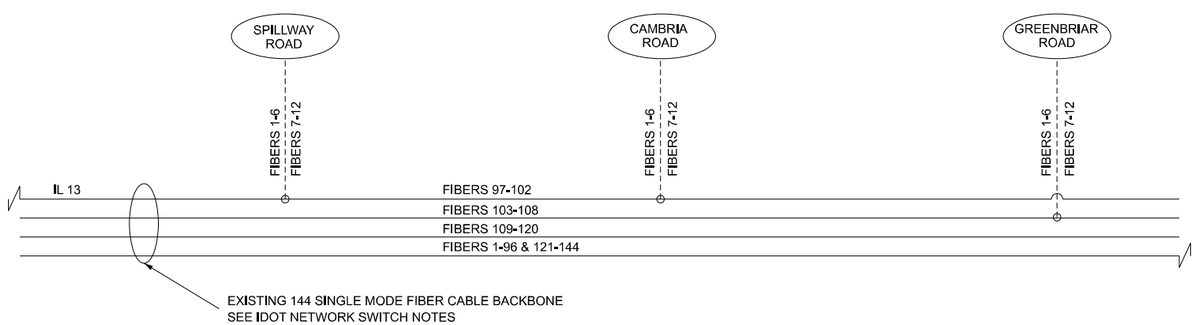

LEGEND

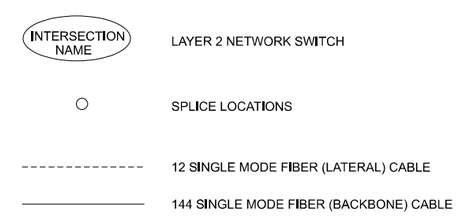

MODEL: Default
FILE NAME: pw://terrengpw.bentley.com:terrengpw-01/Documents/Projects/2022/22-169 IL 13 • CD/Design/100 • Drawings/CADD Data/Sheets/0978373-ORD-HS-Fiber.dgn

TERRA ENGINEERING LTD.	USER NAME = ColinC	DESIGNED - CC	REVISED -	STATE OF ILLINOIS DEPARTMENT OF TRANSPORTATION	TRAFFIC SIGNAL INTERCONNECT	F.A.I RTE.	SECTION	COUNTY	TOTAL SHEETS	SHEET NO.
		DRAWN - AE	REVISED -			331	(1-4)R-5,B-1,B-2,B-3,B-4	Williamson	519	201
	PLOT SCALE = 20.014 ' / in.	CHECKED - NS	REVISED -					CONTRACT NO.		
	PLOT DATE = 11/26/2024	DATE - 2024/11/26	REVISED -		SCALE: SHEET 1 OF 1 SHEETS STA. TO STA.		ILLINOIS	FED. AID PROJECT		

LIGHTING SUMMARY OF QUANTITIES

CODE NO.	DESCRIPTION	UNIT	QUANTITY
80400100	ELECTRIC SERVICE INSTALLATION	EACH	1
81028320	UNDERGROUND CONDUIT, PVC, 1" DIA	FOOT	4,025
81500120	GULFBOX JUNCTION, COMPOSITE CONCRETE	EACH	3
81702110	ELECTRIC CABLE IN CONDUIT, 600V (XLP-TYPE USE) 1/C NO. 10	FOOT	16,122
82110008	LUMINAIRE, LED, ROADWAY, OUTPUT DESIGNATION H	EACH	24
82500335	LIGHTING CONTROLLER, BASE MOUNTED, 240VOLT, 100AMP	ECH	1
83002600	LIGHT POLE, ALUMINUM, 40FT. M.H., 15 FT. DAVIT ARM	EACH	12
83003600	LIGHT POLE, ALUMINUM, 45FT. M.H., 15 FT. DAVIT ARM	EACH	8
83002350	LIGHT POLE, ALUMINUM, 40FT. M.H., 8 FT. DAVIT ARM-TWIN	EACH	2
83600300	LIGHT POLE FOUNDATION, 30" DIAMETER	FOOT	132
84200600	REMOVAL OF LIGHTING UNIT, NO SALVAGE	EACH	10
84200804	REMOVAL OF POLE FOUNDATION	EACH	10
84500110	REMOVAL OF LIGHTING CONTROLLER	EACH	1
84500130	REMOVAL OF LIGHTING CONTROLLER FOUNDATION	EACH	1
89502300	REMOVE ELECTRIC CABLE FROM CONDUIT	FOOT	4,620
Z0033024	MAINTAIN EXISTING LIGHTING SYSTEM	L SUM	1

CALCULATION RESULTS

	DESIGN CRITERIA		RESULTS	
LOCATION	AVG.	AVG./MIN.	AVG.	AVG./MIN.
INTERSECTION	1.7	3.0	2.03	2.90

DESIGN DATA TABLE

INITIAL LAMP LUMEN (LL) FIXTURE	27,000 LUMENS
LIGHT LOSS FACTOR (LLF)	0.9
NOMINAL MOUNTING HEIGHT, FIXTURE A & B	40 FT
NOMINAL MOUNTING HEIGHT, FIXTURE C	45 FT
LUMINAIRE CLASSIFICATION	LED, TYPE III
PAVEMENT CLASSIFICATION	R3

SERVICE AMPERAGE TABLE

VOLTAGE	MAIN BREAKER	CIRCUIT	BRANCH CIRCUIT COLOR	BRANCH CIRCUIT DESIGN LOAD (AMPS)	BRANCH CIRCUIT BREAKER
CONTROLLER #1 120/240VAC (SERVICE)	100A	C1-L1	RED	11.0	20A
			BLACK		
		C1-L2	RED	12.0	20A
			BLACK		
		C1-L3	RED	1.0	20A
			BLACK		

GENERAL NOTES

1. ELECTRIC CABLES IN EXISTING UNIT DUCT OR CONDUIT SHALL BE REMOVED AND PAID FOR AS "REMOVE ELECTRIC CABLE FROM CONDUIT".
2. IN NO INSTANCE SHALL THE CONTRACTOR INSTALL A LIGHT POLE AND/OR LIGHTING CONTROLLER WITHIN 5 FOOT OF THE BACK OF GUARDRAIL POST.
3. THE CONTRACTOR SHALL ENSURE CONTINUITY OF THE CIRCUITS VIA UNDERGROUND OR AERIAL CABLE INSTALLATION, AS NECESSARY, DURING CONSTRUCTION STAGES. THIS WORK SHALL BE PAID FOR AS "MAINTAIN EXISTING LIGHTING SYSTEM".
4. OFFSET FOR PROPOSED GROUND MOUNTED LIGHT POLES IS MEASURED FROM ROADWAY BASELINES.

HIGHWAY STANDARDS

805001-01	ELECTRICAL SERVICE INSTALLATION
814001-03	HANDHOLES
821101-02	LUMINAIRE WIRING IN POLE
825011-04	LIGHTING CONTROLLER PEDESTAL MOUNTED, 240V
830006-05	LIGHT POLE ALUMINUM DAVIT ARM
836001-04	LIGHT POLE FOUNDATION
838001-01	BREAKAWAY DEVICES

LIGHTING LEGEND

- PROPOSED LIGHTING CONTROLLER, PEDESTAL MOUNTED
- PROPOSED GULFBOX JUNCTION, COMPOSITE CONCRETE
- PROPOSED LIGHTING UNIT, 40 FT. M.H., 15 FT DAVIT ARM, LED LUMINAIRE, OUTPUT TYPE H
- PROPOSED LIGHTING UNIT, 45 FT. M.H., 15 FT. DAVIT ARM, LED LUMINAIRE, OUTPUT TYPE H
- PROPOSED LIGHTING UNIT, ALUMINUM, 40FT. M.H., 15 FT. DAVIT ARM-TWIN, LED LUMINAIRE, OUTPUT TYPE H
- L — PROPOSED UNDERGROUND CONDUIT, PVC, 1" DIA., ELECTRIC CABLE IN CONDUIT, 600V (XLP-TYPE USE) 1/C NO. 10
- L — EXISTING UNDERGROUND ELECTRIC CABLE
- EXISTING LIGHTING UNIT TO BE REMOVED
- EXISTING LIGHTING CONTROLLER TO BE REMOVED
- EXISTING ELECTRIC SERVICE TO BE REMAIN

CABLE TAGS

(A) 2-#10 AWG (240V), 1-#10 GND IN 1" CONDUIT

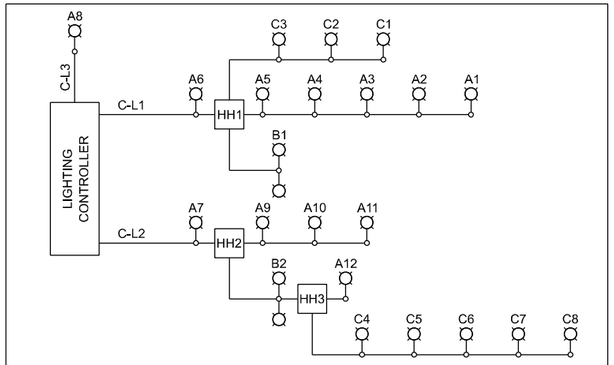

1 LIGHTING CIRCUIT DIAGRAM
N.T.S.

MODEL: Lighting Legend [Sheet]
FILE NAME: L:\CDI\c\2200436\2043630\Lighting\CADD_Sheets\D97837-sht-light_legend.dgn

CMT
License No. 184-000613 © Copyright CMT, Inc.

USER NAME = ajhawar	DESIGNED - JRV	REVISED -	
	DRAWN - BLY	REVISED -	
PLOT SCALE = 0.16666667 ' / in.	CHECKED - MJO	REVISED -	
PLOT DATE = 12/12/2024	DATE - 10/11/2024	REVISED -	

STATE OF ILLINOIS
DEPARTMENT OF TRANSPORTATION

LIGHTING LEGEND, NOTES, AND SUMMARY OF QUANTITIES
ILLINOIS ROUTE 13

SCALE: 1"=20' | SHEET OF SHEETS | STA. TO STA.

F.A.P. RTE.	SECTION	COUNTY	TOTAL SHEETS	SHEET NO.
331	(1-4)R-5,B-1,B-2,B-4	WILLIAMSON	519	202
		CONTRACT NO. 78373		
		ILLINOIS	FED. AID PROJECT	

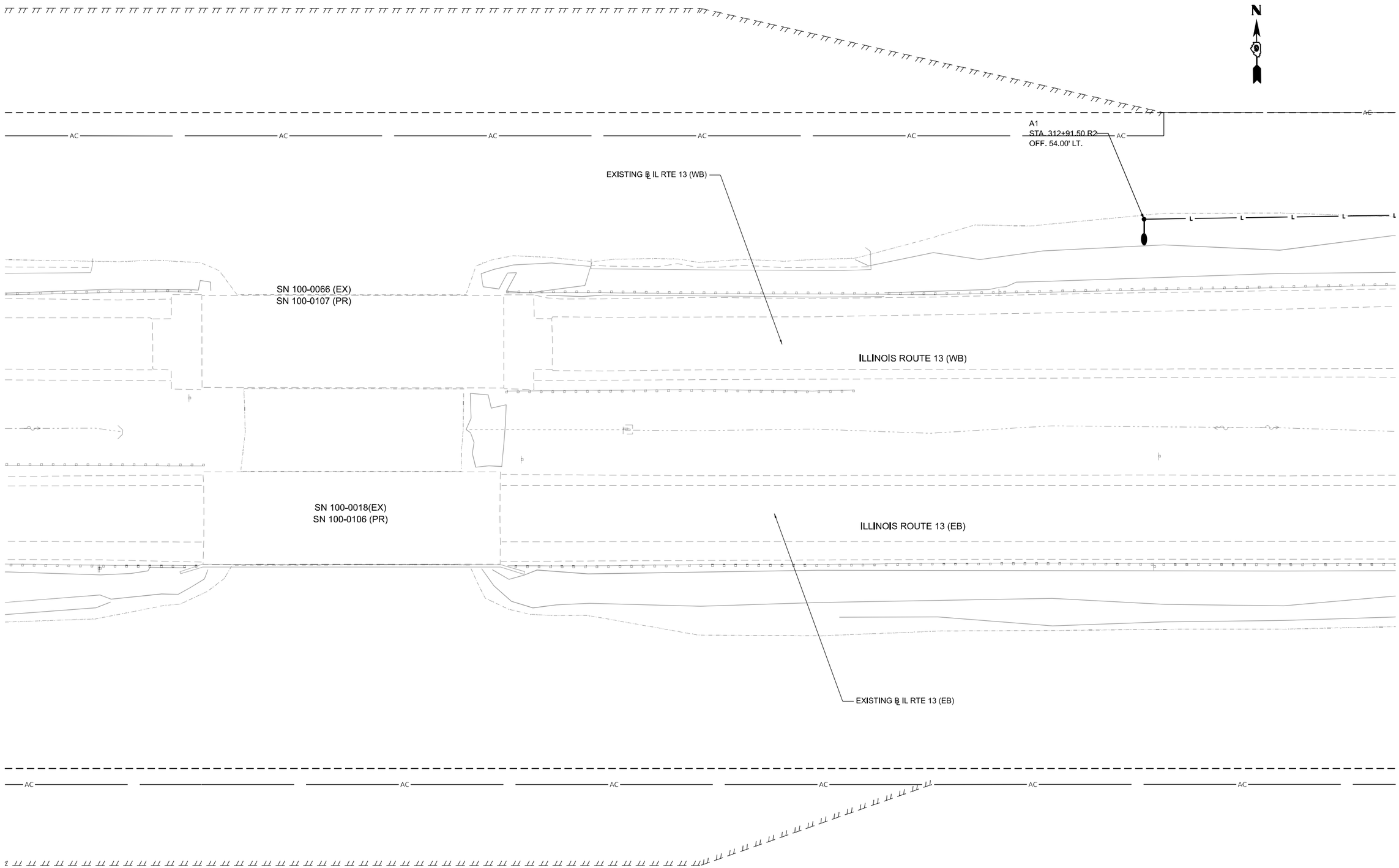

MODEL: SHT_13EB_4 • IT_IL13_PLAN-1
FILE NAME: L:\CDI\c020436\20\436300\Lighting\CADD_Sheets\D978373-sht-light_plan.dgn

CMT
License No. 184-000613
© Copyright CMT, Inc.

USER NAME = ajhawar	DESIGNED - JRV	REVISED -	
	DRAWN - BLY	REVISED -	
PLOT SCALE = 0.16666667 ' / in.	CHECKED - MJO	REVISED -	
PLOT DATE = 12/12/2024	DATE - 10/11/2024	REVISED -	

STATE OF ILLINOIS
DEPARTMENT OF TRANSPORTATION

LIGHTING PLAN
ILLINOIS ROUTE 13

SCALE: 1"=20' | SHEET OF SHEETS | STA. TO STA.

F.A.P. RTE.	SECTION	COUNTY	TOTAL SHEETS	SHEET NO.
331	(1-4)R-5,B-1,B-2,B-4	WILLIAMSON	519	203
		CONTRACT NO. 78373		
		ILLINOIS	FED. AID PROJECT	

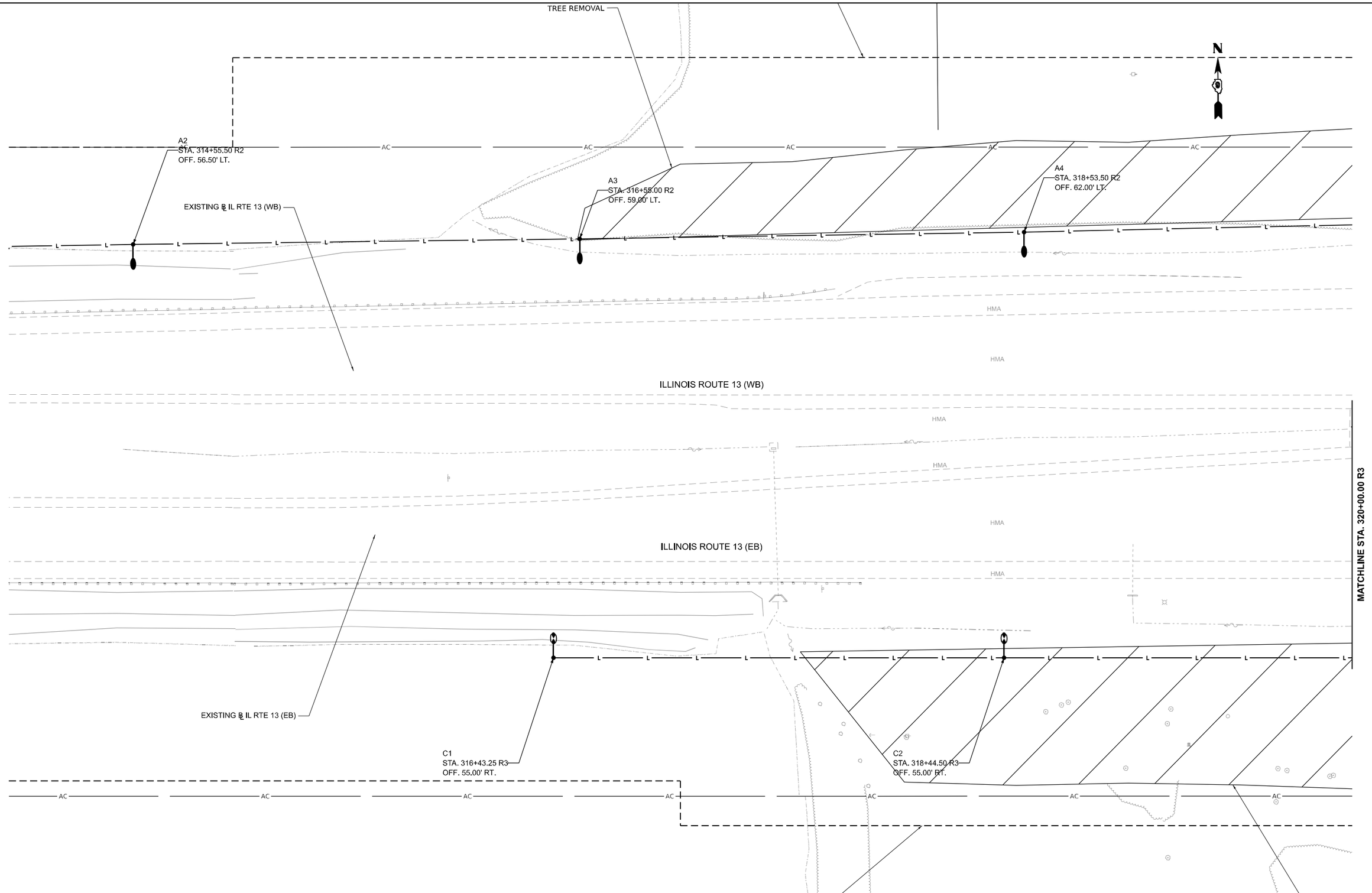

MODEL: SHT_13EB_4 - LT_IL13_PLAN-2
FILE NAME: L:\CDI\nc\2004385-00\436300\Lighting\CADD_Sheets\D978373-sht-light_plan.dgn

CMT
License No. 184-000613
© Copyright CMT, Inc.

USER NAME = ajhawar	DESIGNED - JRV	REVISED -	
	DRAWN - BLY	REVISED -	
PLOT SCALE = 0.16666667 ' / in.	CHECKED - MJO	REVISED -	
PLOT DATE = 12/12/2024	DATE - 10/11/2024	REVISED -	

STATE OF ILLINOIS
DEPARTMENT OF TRANSPORTATION

LIGHTING PLAN
ILLINOIS ROUTE 13

SCALE: 1"=20' | SHEET OF SHEETS | STA. TO STA.

F.A.P. RTE.	SECTION	COUNTY	TOTAL SHEETS	SHEET NO.
331	(1-4)R-5,B-1,B-2,B-4	WILLIAMSON	519	204
		CONTRACT NO. 78373		
		ILLINOIS	FED. AID PROJECT	

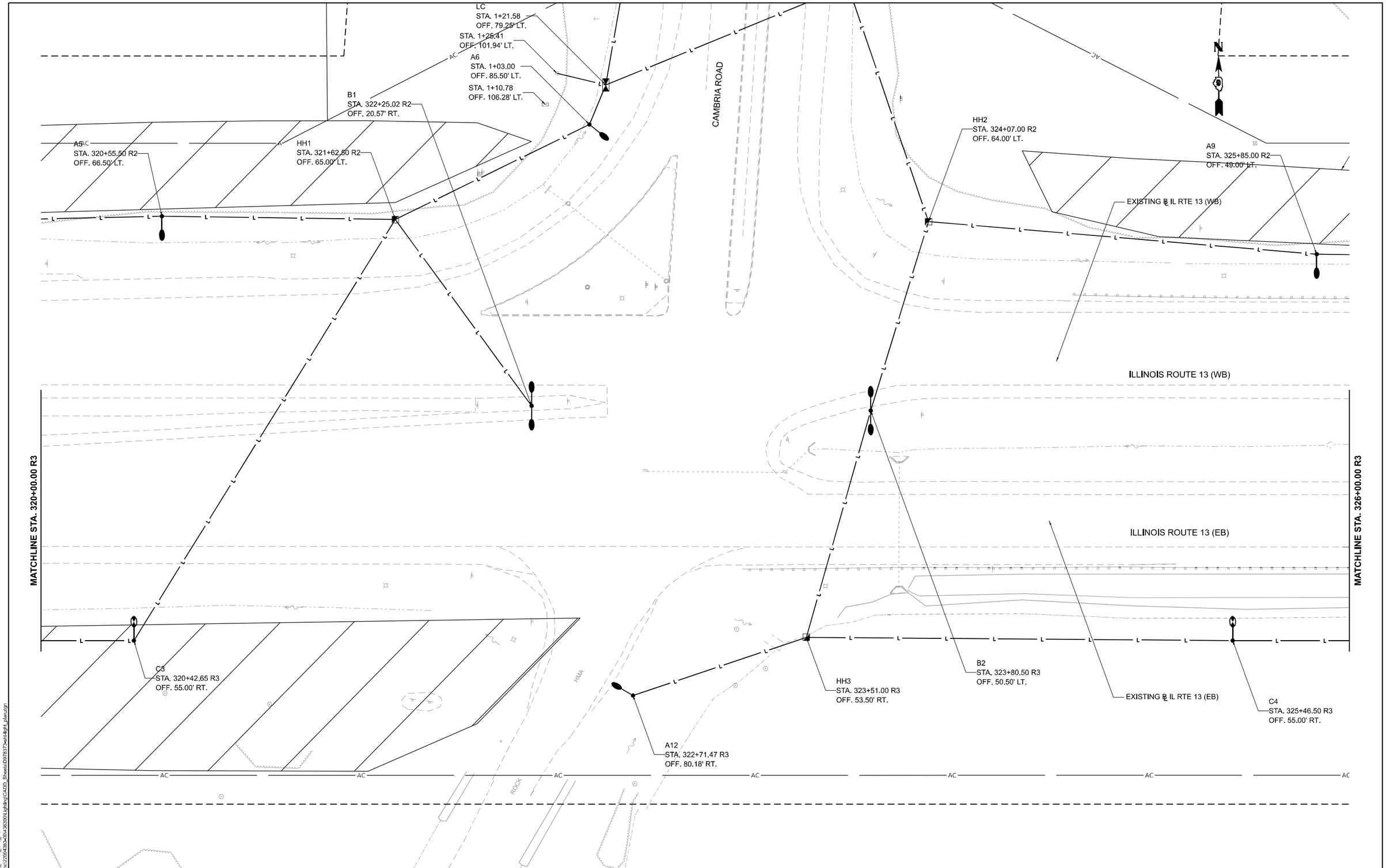

MODEL: SHT_13EB_4-LT_IL13_PLAN-3
FILE NAME: L:\CDI\nc\2200436\20\436300\Lighting\CADD_Sheets\D978372*sch-light_plan.dgn

CMT
License No. 184-000613 © Copyright CMT, Inc.

USER NAME = ajhawar	DESIGNED - JRV	REVISED -	
	DRAWN - BLY	REVISED -	
PLOT SCALE = 0.16666667 ' / in.	CHECKED - MJO	REVISED -	
PLOT DATE = 12/12/2024	DATE - 10/11/2024	REVISED -	

STATE OF ILLINOIS
DEPARTMENT OF TRANSPORTATION

LIGHTING PLAN
ILLINOIS ROUTE 13

SCALE: 1"=20' | SHEET OF SHEETS | STA. TO STA.

F.A.P. RTE.	SECTION	COUNTY	TOTAL SHEETS	SHEET NO.
331	(1-4)R-5,B-1,B-2,B-4	WILLIAMSON	519	205
		CONTRACT NO. 78373		
		ILLINOIS	FED. AID PROJECT	

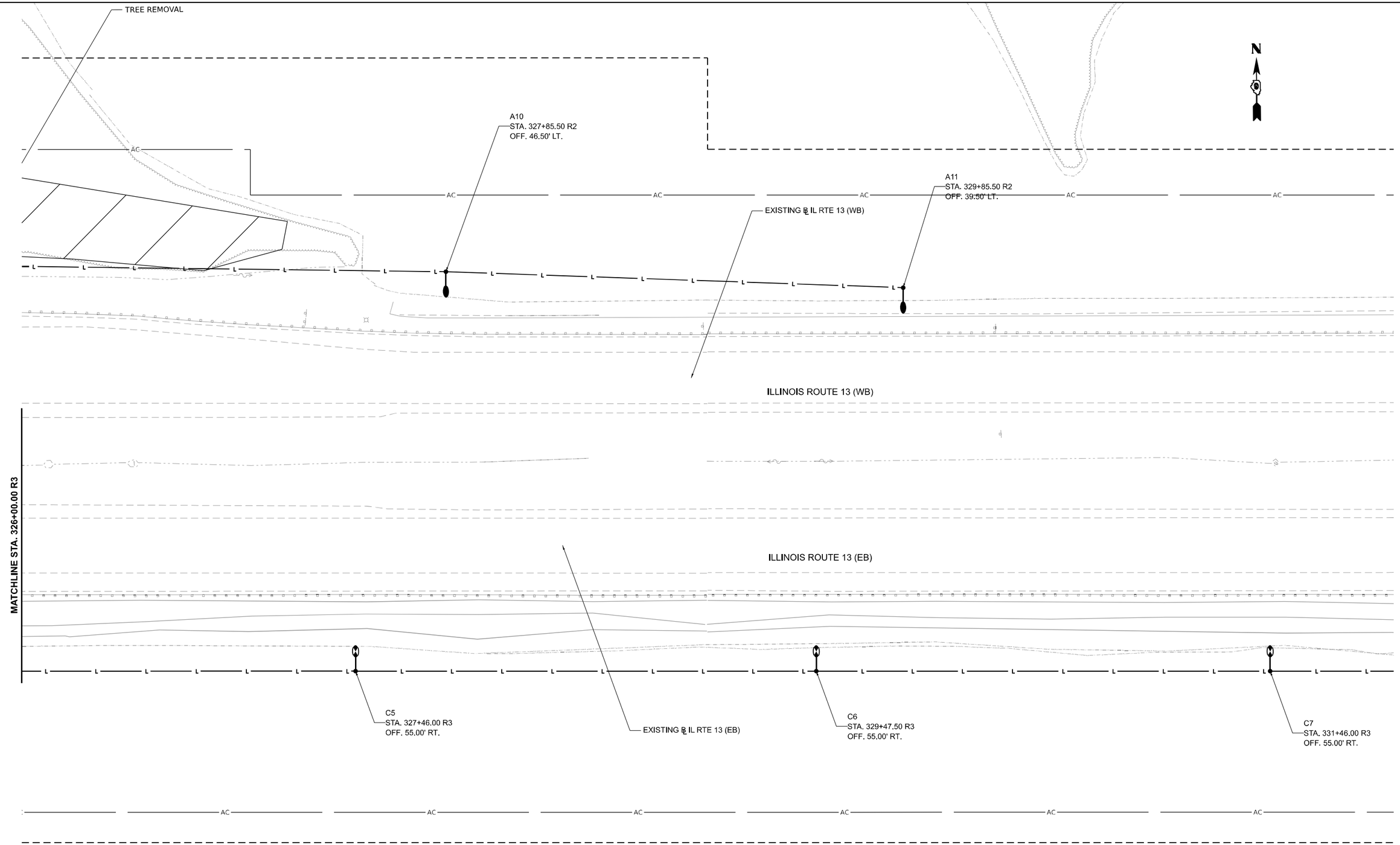

MODEL: SHT_13ER_4 - IT_IL13_PLAN-4
FILE NAME: L:\CDI\nc\2200435-004-36300\Lighting\CADD_Sheets\D978373-sht-light_plan.dgn

CMT
License No. 184-000613
© Copyright CMT, Inc.

USER NAME = ajhawar	DESIGNED - JRV	REVISED -	
	DRAWN - BLY	REVISED -	
PLOT SCALE = 0.16666667 ' / in.	CHECKED - MJO	REVISED -	
PLOT DATE = 12/12/2024	DATE - 10/11/2024	REVISED -	

STATE OF ILLINOIS
DEPARTMENT OF TRANSPORTATION

LIGHTING PLAN
ILLINOIS ROUTE 13

SCALE: 1"=20' | SHEET OF SHEETS | STA. TO STA.

F.A.P. RTE.	SECTION	COUNTY	TOTAL SHEETS	SHEET NO.
331	(1-4)R-5,B-1,B-2,B-4	WILLIAMSON	519	206
		CONTRACT NO. 78373		
	ILLINOIS	FED. AID PROJECT		

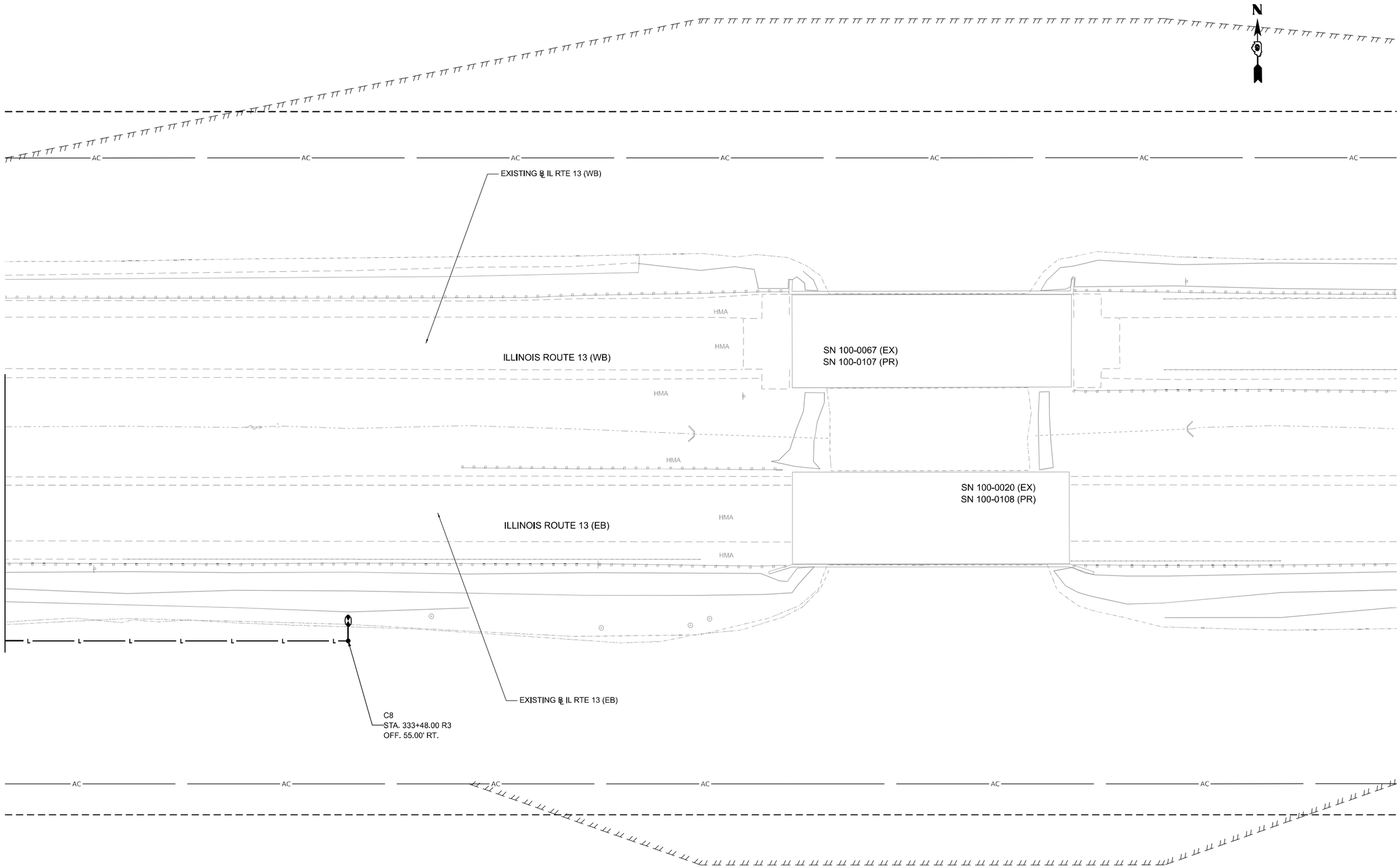

MODEL: SHT_13EB_4 - LT_IL13_PLAN-5
FILE NAME: I:\CDInc\22004385\04385300\Lighting\CADD_Sheets\D978373-sht-light_plan.dgn

CMT
License No. 184-000613
© Copyright CMT, Inc.

USER NAME = a@hawar	DESIGNED - JRV	REVISED -	
	DRAWN - BLY	REVISED -	
PLOT SCALE = 0.16666667 ' / in.	CHECKED - MJO	REVISED -	
PLOT DATE = 12/12/2024	DATE - 10/11/2024	REVISED -	

STATE OF ILLINOIS
DEPARTMENT OF TRANSPORTATION

LIGHTING PLAN
ILLINOIS ROUTE 13

SCALE: 1"=20' | SHEET OF SHEETS | STA. TO STA.

F.A.P. RTE.	SECTION	COUNTY	TOTAL SHEETS	SHEET NO.
331	(1-4)R-5,B-1,B-2,B-4	WILLIAMSON	519	207
		CONTRACT NO. 78373		
		ILLINOIS	FED. AID PROJECT	

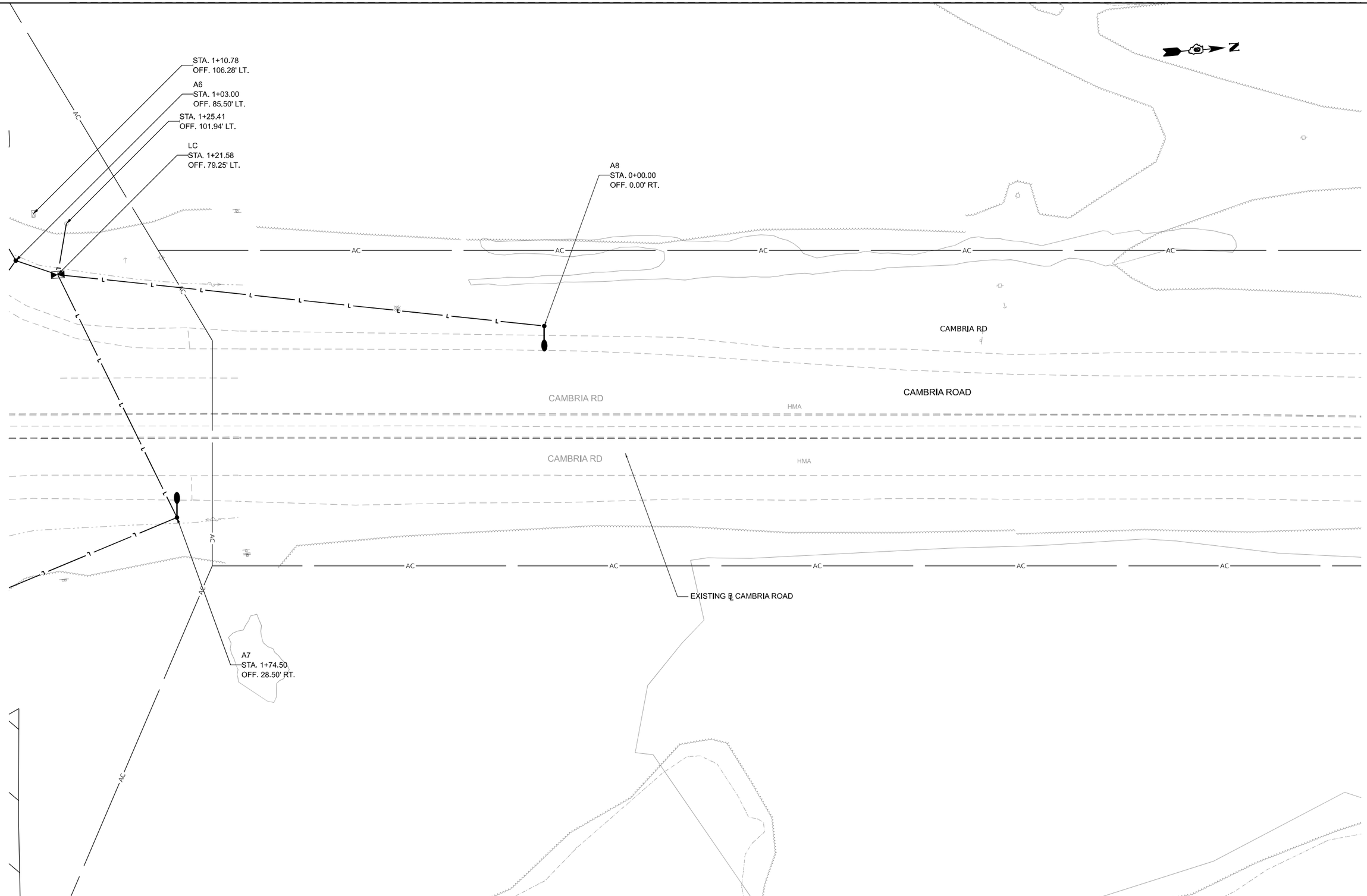

MODEL: SHT_CAMBRIA - LT_CR_PLAN [Sheet]
FILE NAME: L:\CDI\cc22\0436\-09\-363001\Lighting\CADD_Sheets\0378373-sht-light_plan.dgn

CMT
License No. 184-000613
© Copyright CMT, Inc.

USER NAME = ajhawar	DESIGNED - JRV	REVISED -	
	DRAWN - BLY	REVISED -	
PLOT SCALE = 0.16660000 ' / in.	CHECKED - MJO	REVISED -	
PLOT DATE = 12/12/2024	DATE - 10/11/2024	REVISED -	

STATE OF ILLINOIS
DEPARTMENT OF TRANSPORTATION

LIGHTING PLAN
ILLINOIS ROUTE 13

SCALE: 1"=20' | SHEET OF SHEETS | STA. TO STA.

F.A.P. RTE.	SECTION	COUNTY	TOTAL SHEETS	SHEET NO.
331	(1-4)R-5,B-1,B-2,B-4	WILLIAMSON	519	208
		CONTRACT NO. 78373		
		ILLINOIS	FED. AID PROJECT	

LIGHT POLE FOUNDATION

DATA, STEEL ** FOUNDATION TABLE			
BOLT CIRCLE	A	B	MOUNTING HEIGHT
1'-3"	10"	6'-0"	45'-0" OR 50'-0" *
1'-3"	8"	6'-0"	45'-0"
11"	8"	6'-0"	40'-0" OR LESS

* FOR USE ON POLES W/TWIN TENON

** MINIMUM TORQUE REQ'D TO INSTALL FOUNDATIONS SHALL BE 5,000 LBS

LOW MOUNTING FOUNDATION TABLE		
HEIGHT	DEPTH	BOLT CIRCLE
30'-0"	5'-0"	11"
31'-0" - 35'-0"	6'-0"	11"
36'-0" - 40'-0"	7'-0"	1'-3"
41'-0" - 45'-0"	7'-6"	1'-3"
46'-0" - 50'-0"	8'-0"	1'-3"

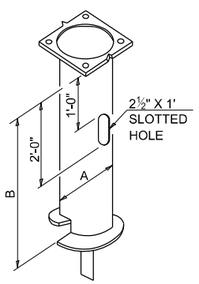

STEEL POLE FOUNDATION

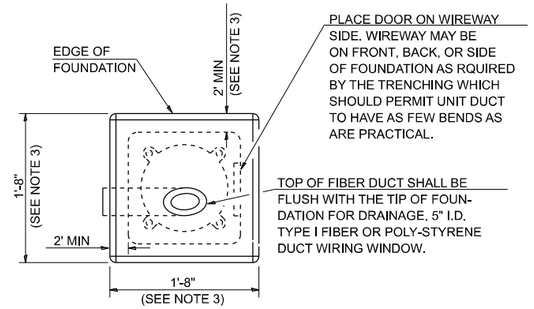

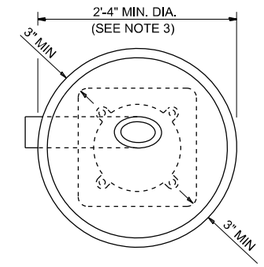

ALT. FOUNDATION

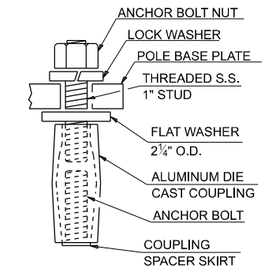

TYP. COUPLING

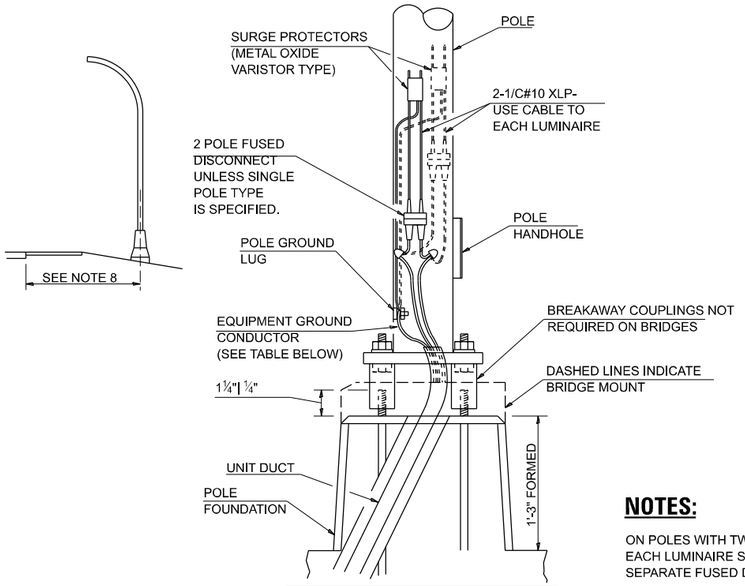

EQUIPMENT GROUND TABLE	
BREAKER SIZE	CONDUCTOR SIZE
30 AMP.	#10 COPPER
40 AMP.	#10 COPPER
60 AMP.	#10 COPPER
100 AMP.	#8 COPPER

NOTES:

ON POLES WITH TWO LUMINAIRES, EACH LUMINAIRE SHALL HAVE A SEPARATE FUSED DISCONNECT.

INSTALLATION INSTRUCTIONS:

SCREW COUPLINGS ON TO ANCHOR BOLTS TO END OF THREADS, LEVEL COUPLINGS, VERY IMPORTANT. AS COUPLINGS WILL BECOME OVER-STRESSED AND EITHER CRACK OR STRIP THREADS INSIDE COUPLING.

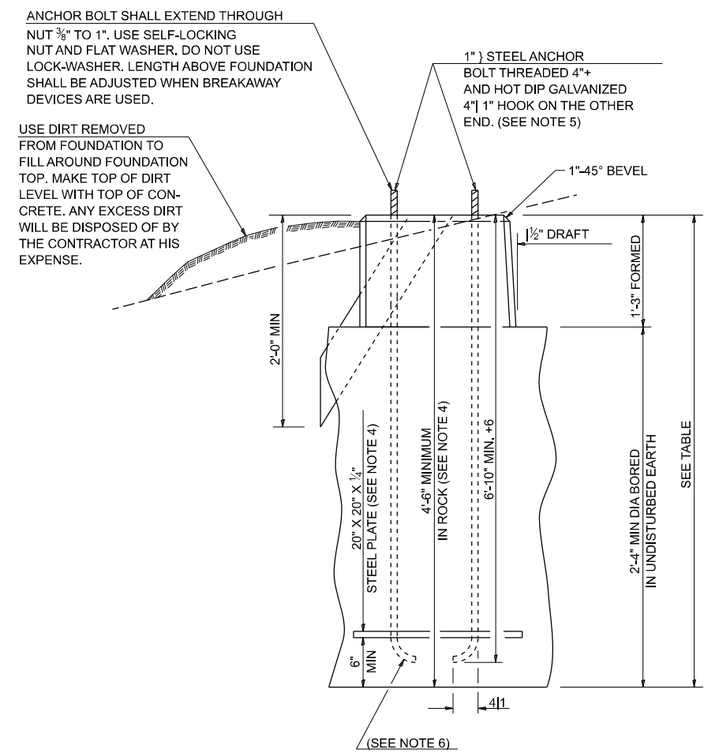

☐ **METAL** OR ☒ **CONCRETE**

GENERAL NOTES

1. AFTER POURING CONCRETE, THE FORM SHALL REMAIN UNDISTURBED OVERNIGHT.
2. THE TOP 15" ONLY SHALL BE FORMED. CONCRETE BOUNDED BY UNDISTURBED EARTH ONLY SHALL FILL THE REMAINDER OF THE HOLE.
3. MINIMUM CLEARANCE FROM THE OUTSIDE EDGE OF FOUNDATION TO ANY PART OF THE POLE BASEPLATE SHALL BE 3".
4. THE DEPTH OF THE FOUNDATION MAY BE REDUCED 6" FOR EVERY 12" OF ROCK ENCOUNTERED WITH A MINIMUM DEPTH OF 4'-6". WHEN THE DEPTH OF THE FOUNDATION IS DECREASED TO LESS THAN 6' THE ANCHOR BOLTS SHALL BE CUT, THREADED, AND A STEEL PLATE 20" X 20" X 1/4 " SHALL BE INSTALLED ON THE ANCHOR BOLTS 6" ABOVE THE BOTTOM OF THE EXCAVATION. THE COST SHALL BE INCIDENTAL THE FOUNDATION.
5. ON PARAPET WALLS USE 1 1/4 " DIA. ANCHOR BOLTS. USE SELF-LOCKING NUT AND FLAT WASHER. DO NOT USE LOCKWASHER. (FOR DETAILS SEE STANDARD III/2.35 OF BRIDGE DESIGN MANUAL.
6. BEND RADIUS SHALL BE FOUR TIMES BOLT DIAMETER.
7. CONNECT GROUND WIRES TO POLE BASE GROUND LUG, NOT ANCHOR BOLTS OR TRANSFORMER BASE.
8. LOW MOUNT POLE FOUNDATION SETBACK: FOR HORIZONTAL MOUNTED LUMINAIRES, SETBACK SHALL BE A MINIMUM OF 20' FROM EDGE OF PAVEMENT.

   FOR VERTICAL MOUNT LUMINAIRES, SETBACK SHALL BE A MINIMUM OF 30' FROM EDGE OF PAVEMENT. POLES SHALL BE LOCATED 5' BEHIND GUARDRAIL OR OTHER PROTECTIVE BARRIERS, OR AS DIRECTED BY THE ENGINEER.

DRAWN	02-09-01
REVISED	05-06-08
REVISED	10-21-21
REVISED	05-03-22

STD. 9-09

POLE STANDARDS

"INSTALL AND ORIENT ARM BRACKET OVER POLE TENON AND FIRMLY HAND TIGHTEN THE TWO SET SCREWS. USE THIRD HOLE IN ARM BRACKET AS A GUIDE TO DRILL A 21/64DIAMETER HOLE THROUGH TENON. INSTALL AND TIGHTEN SELF-TAPPING SCREW. TIGHTEN SET SCREWS AN ADDITIONAL ¼ TO ⅜ TURN WITH HEX KEY (NOT PROVIDED). INSTALL LOCKNUTS ON SET SCREWS IF THREADED PROJECTION ALLOWS."

POLE SHALL MEET AASHTO STANDARD SPECIFICATIONS FOR 80 MPH WIND LOADING AND 90 LB, 4.0 SQ. FT E.P.A. LUMINAIRE.

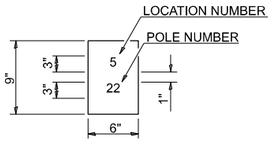

THE CONTRACTOR SHALL FURNISH AND INSTALL A LIGHT POLE IDENTIFICATION OF EACH NEW LIGHT POLE, AS SHOWN ABOVE, INCIDENTAL TO THE RESPECTIVE LIGHT POLE PAY ITEM IN ACCORDANCE WITH ART, 1069.06

THE LIGHT POLE IDENTIFICATION SHALL BE APPLIED TO SIGN BASE MATERIAL AS SPECIFIED IN ART. 1069.06, APPROXIMATELY 7" ABOVE THE ADJACENT PAVEMENT GRADE VISIBLE TO APPROACHING TRAFFIC IN ACCORDANCE WITH HIGHWAY STANDARD 720001.

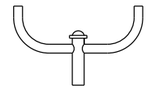

☐ **TWIN TENON**

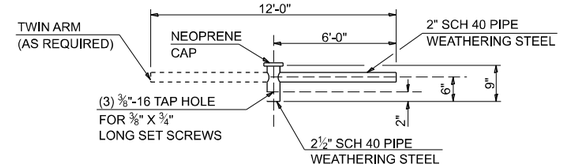

☐ **TENON MOUNT BRACKET ARM**

NOTE: SINGLE OR TWIN ARM ASSEMBLY SHALL BE TILTED 3° ABOVE HORIZONTAL.

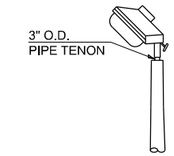

☐ **TENON**

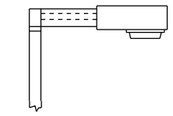

☐ **SHORT BRACKET**

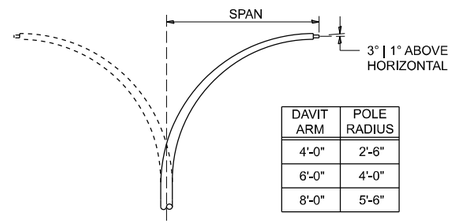

DAVIT ARM	POLE RADIUS
4'-0"	2'-6"
6'-0"	4'-0"
8'-0"	5'-6"

☒ **DAVIT ARM** (AND OR)

☒ **DAVIT ARM–TWIN**

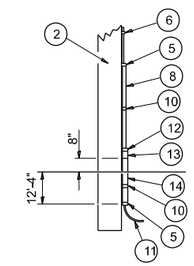

DETAILS FOR UNDERGROUND DISTRIBUTION IF REQUIRED

POLE LENGTH	DEPTH IN GROUND
65'-0"	12'-0"
60'-0"	10'-0"
55'-0"	9'-0"
50'-0"	8'-0"
45'-0"	7'-0"
40'-0"	6'-6"
35'-0"	6'-0"
30'-0"	5'-6"

☐ **POLE, WOOD**

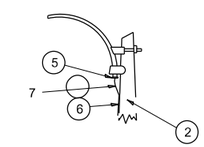

☐ **MAST ARM**

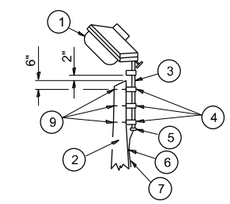

☐ **TENON**

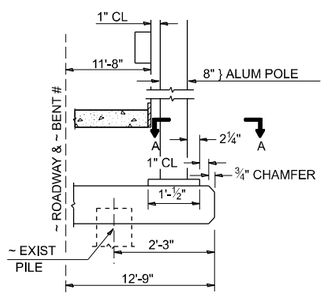

BENT #
(LOOKING)

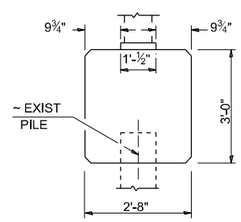

☐ **BRIDGE PIER MOUNT**

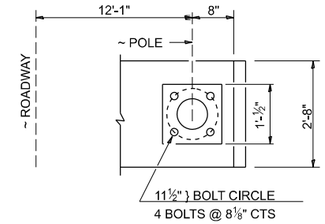

SECTION A–A

1. LUMINAIRE
2. WOOD POLE, CLASS 3 OR BETTER
3. 2½" GALV. STEEL CONDUIT
4. SINGLE OFFSET POLE BAND
5. CONDUIT BUSHING
6. CABLE CLAMPS ON 2' CENTERS
7. 2/C #12 TYPE USE CABLE
8. 1" GALV. STEEL CONDUIT 10' IN LENGTH
9. ⅝" Ø HOT DIPPED GALVANIZED BOLT WITH FLAT WASHER & LOCKNUT (3 REQ'D)
10. CONDUIT CLAMPS ON 3' CENTERS
11. UNIT DUCT
12. THREADED REDUCER
13. "C" CONDULET, THREADED
14. 1½" GALV. STEEL CONDUIT FOR 1 UNIT DUCT OR 3" GALV. STEEL CONDUIT FOR 2 OR 3 UNIT DUCTS.

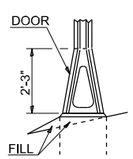

☐ **STAINLESS STEEL FLAIR BASE**

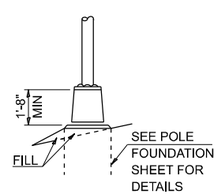

☐ **TRANSFORMER BASE**

☐ **FRANGIBLE**

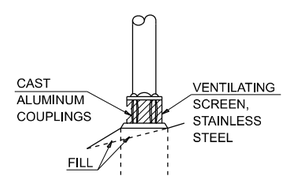

☐ **BREAKAWAY COUPLING**

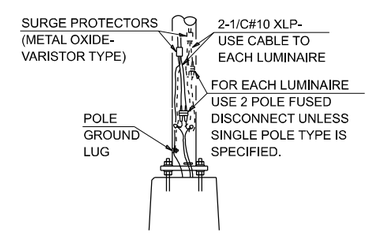

☐ **ANCHOR**

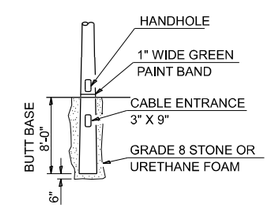

☐ **BUTT BASE**

DRAWN	02-09-01
REVISED	05-06-08
REVISED	10-21-21
REVISED	05-04-22

STD. 9-12

MODEL: Pole Standards [Sheet]
FILE NAME: I:\CDInc\2200435\04435300\Lighting\CADD_Sheets\D78373-sht-dlgn_details.dgn

CMT
License No. 184-000613

USER NAME = a)hawar	DESIGNED - JRV	REVISED -	
	DRAWN - BLY	REVISED -	
PLOT SCALE = 0.16666667 ' / in.	CHECKED - MJO	REVISED -	
PLOT DATE = 12/12/2024	DATE - 10/11/2024	REVISED -	

STATE OF ILLINOIS
DEPARTMENT OF TRANSPORTATION

LIGHTING - DISTRICT DETAILS
ILLINOIS ROUTE 13

SCALE: N.T.S. | SHEET OF SHEETS | STA. TO STA.

F.A.P. RTE.	SECTION	COUNTY	TOTAL SHEETS	SHEET NO.
331	(1-4)R-5,B-1,B-2,B-4	WILLIAMSON	519	210
		CONTRACT NO. 78373		
		ILLINOIS	FED. AID PROJECT	

Bench Mark: Sq. cut in N.W. corner W. wall of S.N. 100-0020.

Existing Structure: S.N. 100-0018 was originally constructed in 1964 under F.A. Rte. 14, Section 5-3B-3. The structure is a three span (38'-3", 50'-11", 38'-3") continuous wide flange bridge with seven beam lines on pile bent abutments. The structure is 132'-0" from bk. to bk. abutments on a zero degree skew. The clear width is 40'-0" between face to face of parapets and the overall out to out width of the bridge is 42'-0". The superstructure consists of seven beam lines of 27WF94 on 6'-4" centers. The original reinforced concrete deck thickness was 7", but was later scarified 1/2" (1999) and a 2 1/4" Microsilica concrete overlay was installed for a total thickness of +/- 8 3/4". The bridge deck is on a normal crown. The abutments are pile bent abutments on H-piles driven to refusal. The wingwalls consist of 12" walls bearing on a single H-pile. The piers are pile bents on seven individually encased piles driven to refusal.

Road closure shall be used during construction. Traffic will be detoured on the adjacent structure using crossovers.

No salvage.

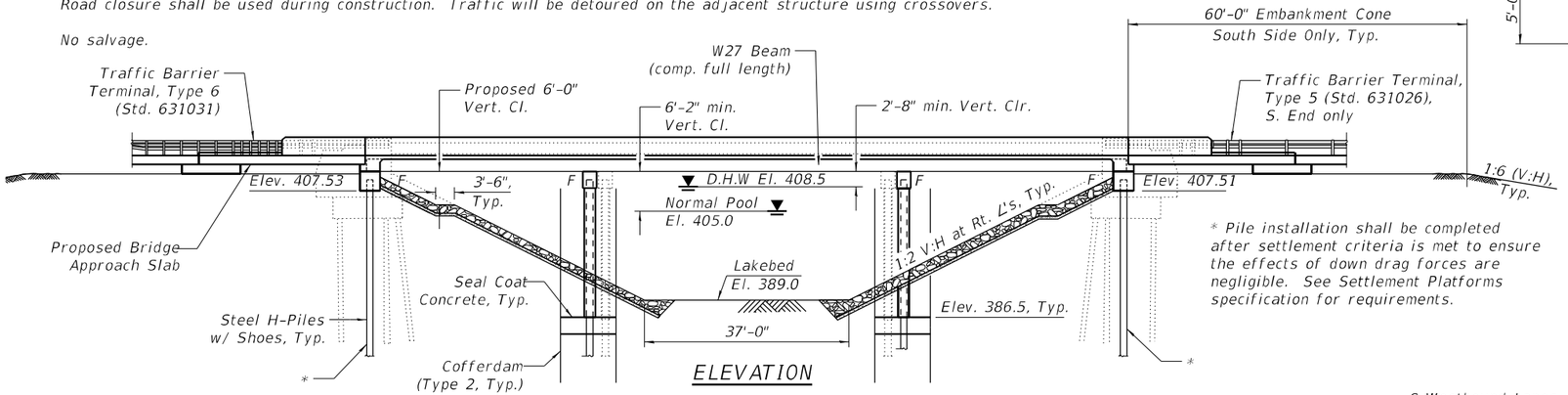

ELEVATION

* Pile installation shall be completed after settlement criteria is met to ensure the effects of down drag forces are negligible. See Settlement Platforms specification for requirements.

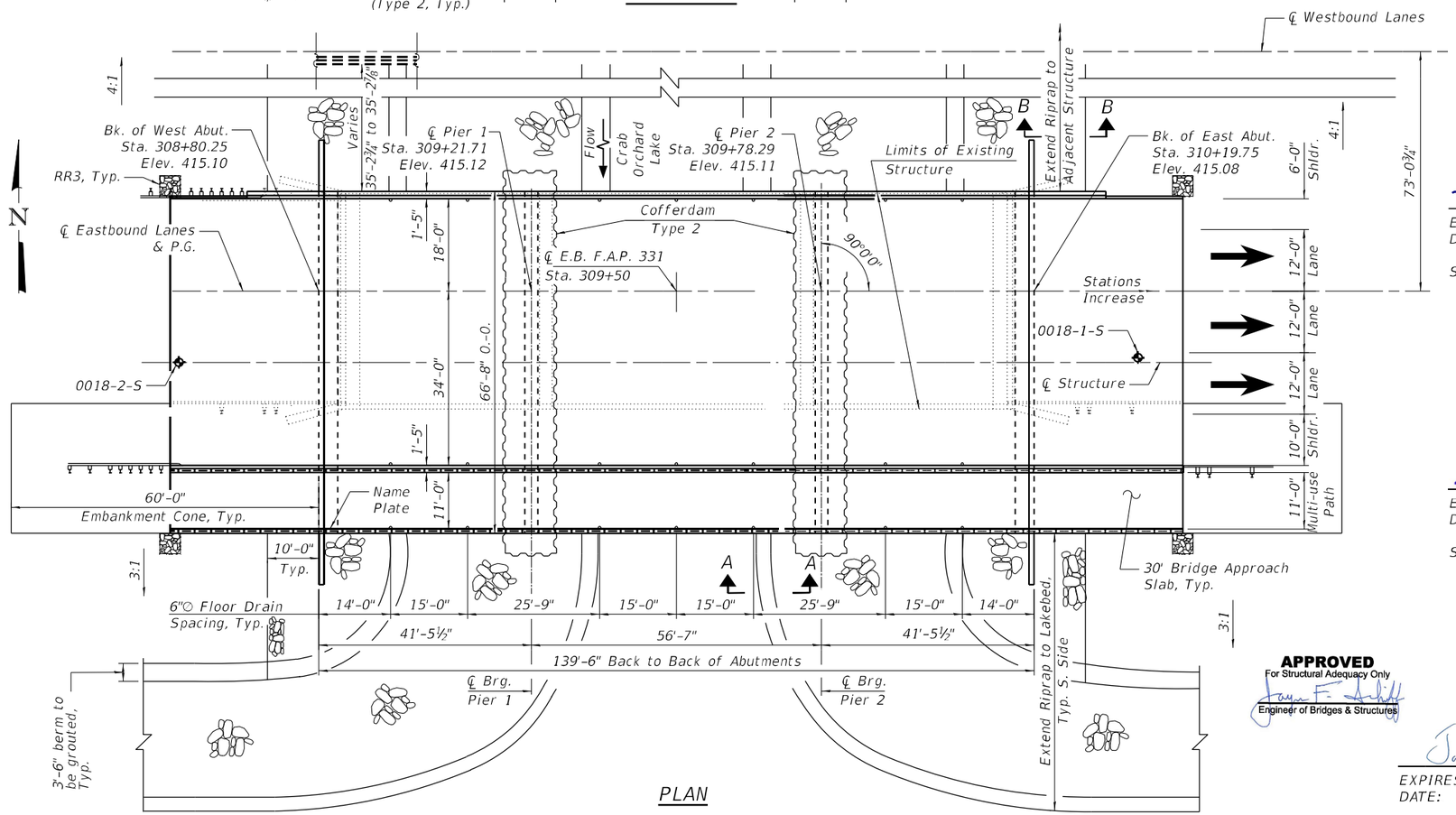

PLAN

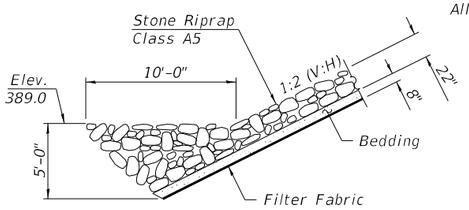

SECTION A-A

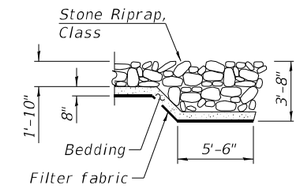

SECTION B-B

LOADING HL-93

Allow 50#/sq. ft. for future wearing surface.

DESIGN SPECIFICATIONS

2020 AASHTO LRFD Bridge Design Specifications, 9th Edition.

DESIGN STRESSES

FIELD UNITS

f'c = 3,500 psi (Substructure)
f'c = 4,000 psi (Superstructure)
fy = 60,000 psi (Reinforcement)
fy = 50,000 psi (M270 Grade 50)
All new structural steel to be galvanized.

SEISMIC DATA

Seismic Performance Zone (SPZ) = 3
Design Spectral Acceleration at 1.0 sec. (SD1) = 0.359g
Design Spectral Acceleration at 0.2 sec. (SDS) = 0.864g
Soil Site Class = D

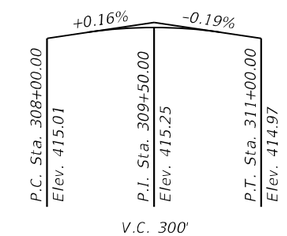

PROFILE GRADE

Along ℄ Eastbound Lanes

STATE OF ILLINOIS
JOHANN F. AAKRE
081-006828
CHICAGO, ILLINOIS
LICENSED STRUCTURAL ENGINEER

EXPIRES: 11/30/2026
DATE: 02/21/2025

Sheets 24 thru 26 of 29.

Notes:

Up to a ¼" to be ground off deck and approach slabs. The Profile Grade shows the final grade after grinding.

See Roadway Plans for Rip Rap quantities and pay items.

STATE OF ILLINOIS
DREW H. COULTAS
81-4539
SPRINGFIELD
LICENSED STRUCTURAL ENGINEER

EXPIRES: 11/30/2026
DATE: 02/21/2025

Sheets 21 thru 23 of 29.

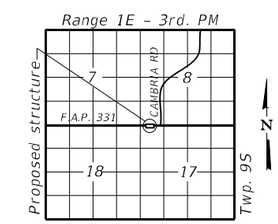

LOCATION SKETCH

LICENSED STRUCTURAL ENGINEER
JASON G. SCHRECKENBERG
081.006845
STATE OF ILLINOIS

EXPIRES: 11/30/2026
DATE: 02/21/2025

Sheets 1 thru 20 and 27 thru 29 of 29.

APPROVED
For Structural Adequacy Only
Engineer of Bridges & Structures

GENERAL PLAN AND ELEVATION
IL 13 E.B. OVER CRAB ORCHARD LAKE
F.A.P. RT. 331 - SEC. 1-4(B-1)
WILLIAMSON COUNTY
STATION 309+50.00
STRUCTURE NO. 100-0106

CIVIL DESIGN, INC. WBE / DBE
EFFINGHAM, IL
LICENSE #184.003222

USER NAME =	DESIGNED - JAG	REVISED -	
	CHECKED - JGS	REVISED -	
PLOT SCALE =	DRAWN - JAG	REVISED -	
PLOT DATE =	CHECKED - JGS	REVISED -	

STATE OF ILLINOIS
DEPARTMENT OF TRANSPORTATION

GENERAL PLAN & ELEVATION
STRUCTURE NO. 100-0106
SHEET 1 OF 29 SHEETS

F.A.P. RTE.	SECTION	COUNTY	TOTAL SHEETS	SHEET NO.
331	(1-4)R-5,RS-2,B-1,B-2,B-3,B-4	WILLIAMSON	519	211
		CONTRACT NO. 78373		
		ILLINOIS	FED. AID PROJECT	

MODEL: Default
FILE NAME: P:\5XXX\50XX-51XX\5000 - IDOT PTB 200-038 D9 IL 13 Crab Orchard Bridges\24-Structures\CAD-MS\100-0106-78373-001-GPE.dgn
3/11/2025 5:51:23 AM

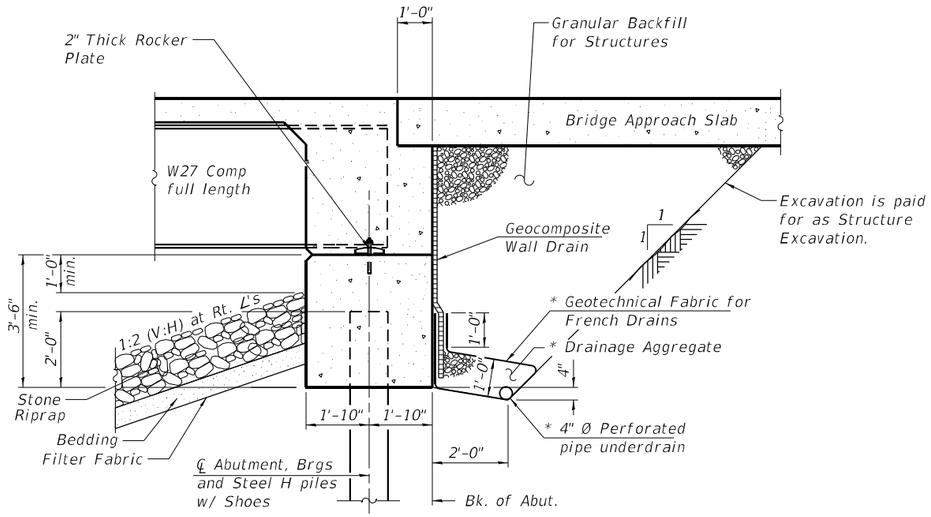

SECTION THRU INTEGRAL ABUTMENT

(Horiz. dim. @ Rt. ∠'s)

* Included in the cost of Pipe Underdrains for Structures.

All drainage system components shall extend 2'-0" from the end of each wingwall except an outlet pipe shall extend until intersecting with the side slopes. The pipes shall drain into concrete headwalls. (See Article 601.05 of the Standard Specifications and Highway Standard 601101).

WATERWAY INFORMATION

Drainage Area = 1.3 Sq. mi. Low Grade Elev. 415.0 @ Sta. 311+00

Flood	Freq. Yr.	Q C.F.S.	Opening Ft² Exist.	Opening Ft² Prop.	Nat. H.W.E.	Head - Ft. Exist.	Head - Ft. Prop.	Headwater El. Exist.	Headwater El. Prop.
Ten-Year	10	586	1,314	1,347	407.5	0.0	0.0	407.5	407.5
Design	50	962	1,424	1,466	408.5	0.0	0.0	408.5	408.5
Base	100	1,131	1,470	1,515	408.9	0.0	0.0	408.9	408.9
Scour Check	200	1,295	1,517	1,565	409.3	0.0	0.0	409.3	409.3
Max. Calc.	500	1,570	1,602	1,653	410.0	0.0	0.0	410.0	410.0

DESIGN SCOUR ELEVATION TABLE

Event / Limit State	Design Scour Elevations (ft.) W. Abut.	Pier 1	Pier 2	E. Abut.	Item 113
Q100	407.5	385.3	385.3	407.5	5
Q200	407.5	385.2	385.2	407.5	
Design	407.5	385.3	385.3	407.5	
Check	407.5	385.2	385.2	407.5	

STATION 309+50.00
BUILT 202X BY
STATE OF ILLINOIS
SEC. 1-4(B-1)
F.A.S. RT. 331
LOADING HL-93
STR. NO. 100-0106

NAME PLATE

See Std. 515001

INDEX OF SHEETS

GENERAL NOTES

Fasteners shall be ASTM F3125 Grade A325 Type 1. Fasteners shall be hot dip galvanized. See Special Provision for "Hot Dip Galvanizing for Structural Steel." Bolts 7/8 in. diameter, holes 15/16 in. diameter, unless otherwise noted.

Calculated weight of Structural Steel = 216,050 lbs. (AASHTO M270 Grade 50)
20,490 lbs. (AASHTO M270 Grade 36)

All structural Steel shall be galvanized. See Special Provision for "Hot Dip Galvanizing for Structural Steel".

No field welding is permitted except as specified in the contract documents.

Reinforcement bars designated (E) shall be epoxy coated.

The finishing machine rails shall be placed on the top of the top flange of the exterior beams within the deck pour. Beam blocks shall be placed between beams at all tie locations in each bay for the full width of the deck pour.

Bearing seat surfaces shall be constructed or adjusted to the designated elevations within a tolerance of 1/8 inch (0.01 ft.). Adjustment shall be made either by grinding the surface or by shimming the bearings.

All bearing plates, side retainers, anchor bolts, nuts, washers and pintles shall be galvanized according to AASHTO M111 or M232 as applicable.

The Seal Coat design thickness is based on the Cofferdam Design Water Elevation (CDWE) shown. Final cofferdam design, details and seal coat thickness shall be submitted to the Engineer for approval. The CDWE is equal to the Estimated Water Surface Elevation (EWSE) plus three feet.

The existing structural steel coating contains lead. The Contractor shall take appropriate precautions to deal with presence of lead on this project.

Layout of the slope protection system may be varied to suit ground conditions in the field as directed by the Engineer.

The embankment configuration with 60 ft. berm shown shall be the minimum that must be placed and compacted prior to construction of the abutments.

The parapet railing, decorative steel railing, posts, splices, ancor devices and plates of railing shall be shop painted with field touch up. The color of the final finish coat of paint shall be black. See Special Provision for "Hot Dip Galvanizing for Structural Steel".

Slipforming of the parapets is not allowed.

TOTAL BILL OF MATERIAL

ITEM	UNIT	SUPER	SUB	TOTAL
Removal of Existing Structures No. 1	Each	-	-	1
Structure Excavation	Cu. Yd.	-	382	382
Cofferdam Excavation	Cu. Yd.	-	600	600
Cofferdam (Type 2) (Location-1)	Each	-	1	1
Cofferdam (Type 2) (Location-2)	Each	-	1	1
Floor Drains	Each	21	-	21
Concrete Structures	Cu. Yd.	-	370.4	370.4
Concrete Superstructure	Cu. Yd.	291.7	-	291.7
Seal Coat Concrete	Cu. Yd.	-	248	248
Protective Coat	Sq. Yd.	1,688	-	1,688
Concrete Superstructure (Approach Slab)	Cu. Yd.	187.1	-	187.1
Furnishing and Erecting Structural Steel	L. Sum	0.25	-	0.25
Stud Shear Connectors	Each	7,704	-	7,704
Reinforcement Bars, Epoxy Coated	Pound	151,490	45,190	196,680
Parapet Railing	Foot	196.0	-	196.0
Furnishing Steel Piles HP 14 x 89	Foot	-	2,794	2,794
Driving Piles	Foot	-	2,794	2,794
Test Pile Steel HP 14 x 89	Each	-	4	4
Pile Shoes	Each	-	48	48
Name Plates	Each	1	-	1
Anchor Bolts, 1"	Each	-	96	96
Granular Backfill for Structures	Cu. Yd.	-	236	236
Geocomposite Wall Drain	Sq. Yd.	-	112	112
Pipe Underdrains for Structures 4"	Foot	-	234	234
Decorative Steel Railing	Foot	196.0	-	196.0
Bar Terminator	Each	380	640	1,020
Bridge Deck Grooving (Longitudinal)	Sq. Yd.	790	-	790
Diamond Grinding (Bridge Section)	Sq. Yd.	1,207	-	1,207

Notes:

Pier and Cofferdam (Type 2) dimensions are typical at all proposed pier locations.

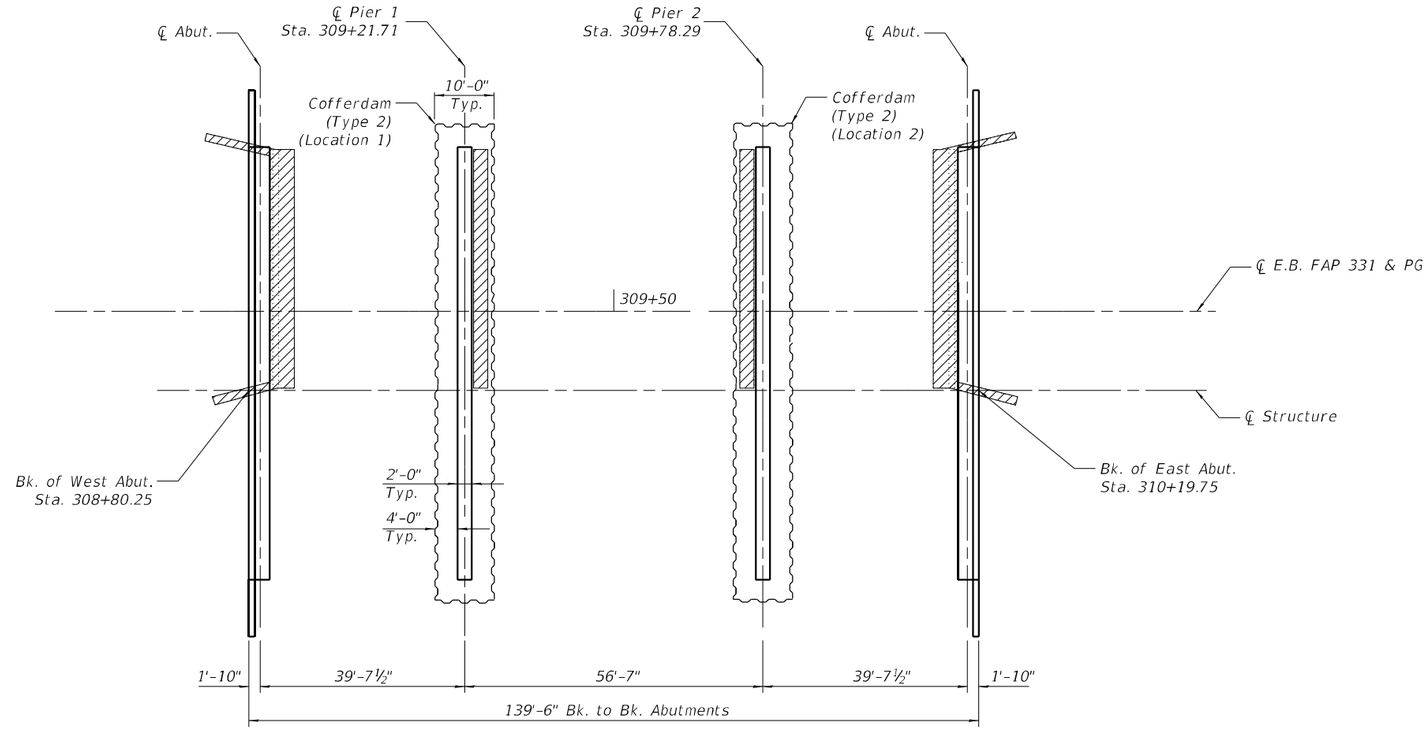

SUBSTRUCTURE LAYOUT

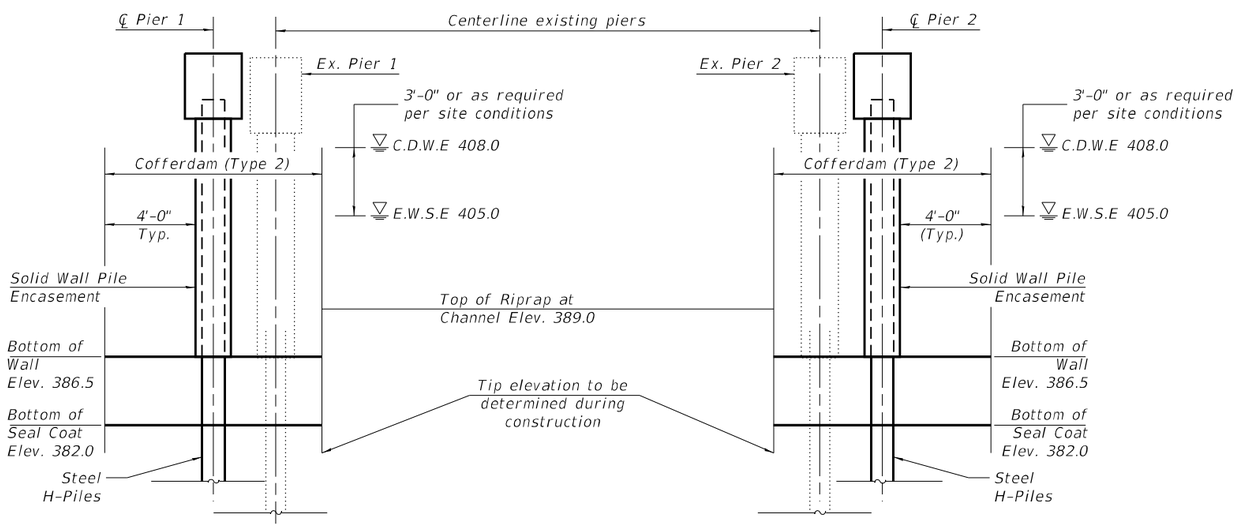

Section thru Pier 1

Section thru Pier 2

COFFERDAM DETAILS

(Horiz. dim. @ Rt. ∠'s)

MODEL: Default
FILE NAME: P:\5XXX\50XX-51XX\5000 - IDOT PTB 200-038 D9 IL 13 Crab Orchard Bridges\24-Structures\CAD-MS\100-0106-78373-003-Substructure Layout.dgn
3/11/2025 5:52:22 AM

CIVIL DESIGN, INC.
WBE / DBE
EFFINGHAM, IL
LICENSE #184.003222

USER NAME =	DESIGNED – JAG	REVISED –	
	CHECKED – JGS	REVISED –	
PLOT SCALE =	DRAWN – JAG	REVISED –	
PLOT DATE =	CHECKED – JGS	REVISED –	

STATE OF ILLINOIS
DEPARTMENT OF TRANSPORTATION

SUBSTRUCTURE LAYOUT
STRUCTURE NO. 100-0106

SHEET 3 OF 29 SHEETS

F.A.P. RTE.	SECTION	COUNTY	TOTAL SHEETS	SHEET NO.
331	(1-4)R-5,RS-2,B-1,B-2,B-3,B-4	WILLIAMSON	519	213
		CONTRACT NO. 78373		
		ILLINOIS FED. AID PROJECT		

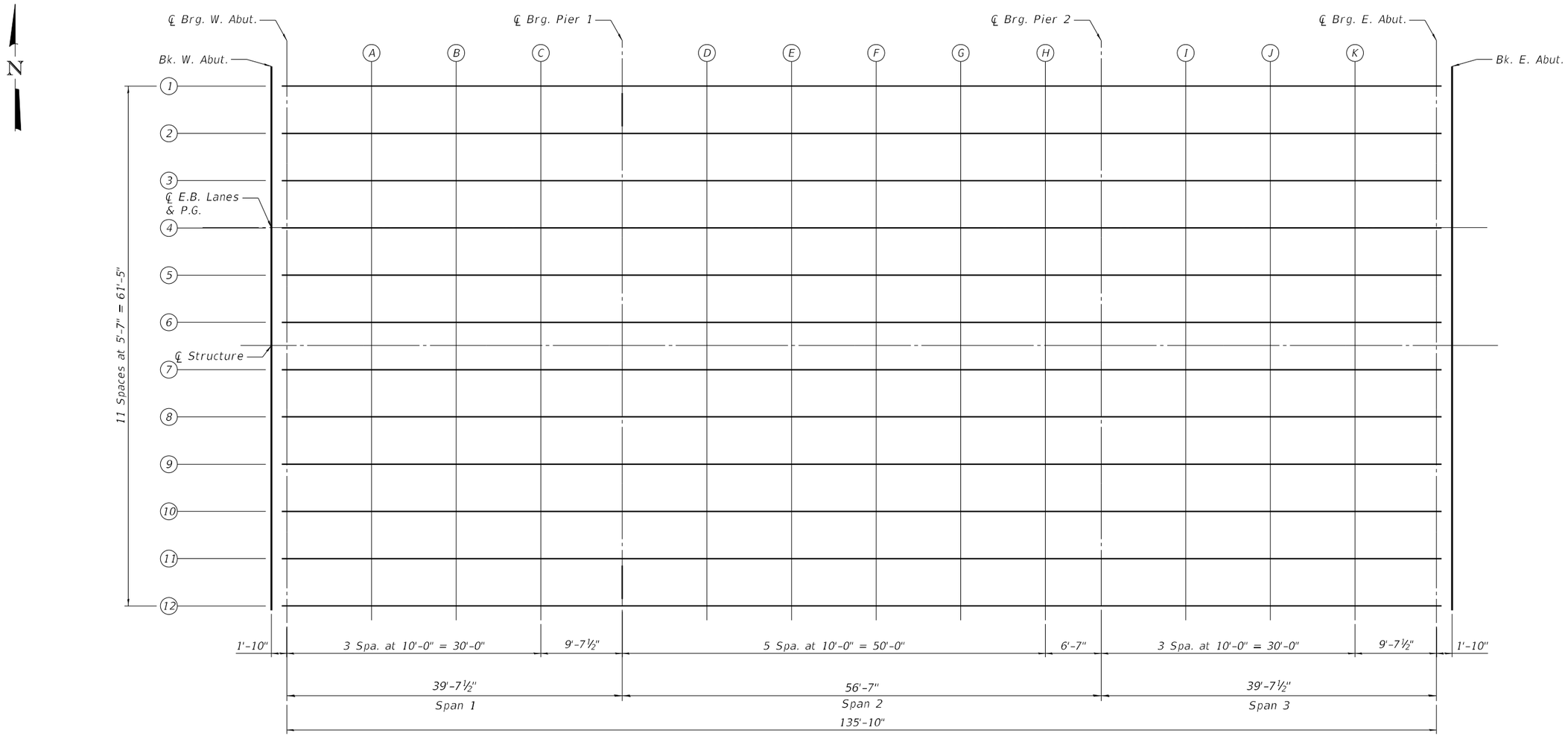

PLAN

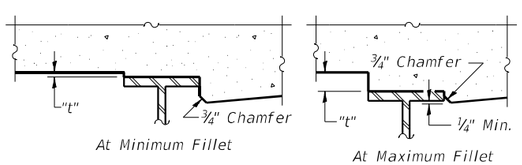

To determine "t": After all structural steel has been erected, elevations of the top flanges of the beams shall be taken at intervals shown above. These elevations subtracted from the "Theoretical Grade Elevations Adjusted for Dead Load Deflection and Grinding" shown below, minus the initial slab thickness prior to grinding, equals the fillet heights "t" above top flange of beams.

The slab is to be ground after curing to achieve smoothness, but the slab is not to be ground to elevations below the "Theoretical Grade Elevations" shown above. For grinding the deck, see Special Provisions.

See sheets 5 & 6 of 29 for Top of Slab Elevations.

FILLET HEIGHTS

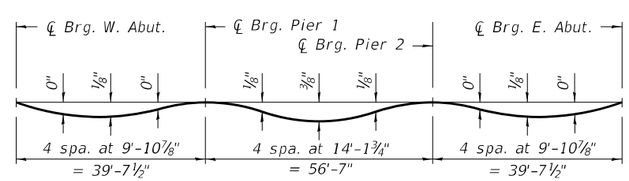

DEAD LOAD DEFLECTION DIAGRAM

(Includes weight of concrete only.)

Note:

The above deflections are not to be used in the field if the engineer is working from the grade elevations adjusted for dead load deflections and grinding as shown above.

See sheets 5 & 6 of 29 for Top of Slab Elevations.

MODEL: Default
FILE NAME: P:\5XXX\50XX-51XX\5000 - IDOT PTB 200-038 D9 IL 13 Crab Orchard Bridges\24-Structures\CAD-MS\100-0106-78373-004-TOS Elev. Layout.dgn
3/11/2025 5:52:47 AM

CDI CIVIL DESIGN, INC. WBE / DBE EFFINGHAM, IL LICENSE #184.003222	USER NAME =	DESIGNED – JAG	REVISED –	STATE OF ILLINOIS DEPARTMENT OF TRANSPORTATION	TOP OF SLAB ELEVATIONS LAYOUT STRUCTURE NO. 100-0106	F.A.P. RTE.	SECTION	COUNTY	TOTAL SHEETS / SHEET NO.
		CHECKED – JGS	REVISED –			331	(1-4)R-5,RS-2,B-1,B-2,B-3,B-4	WILLIAMSON	519 / 214
	PLOT SCALE =	DRAWN – JAG	REVISED –					CONTRACT NO. 78373	
	PLOT DATE =	CHECKED – JGS	REVISED –		SHEET 4 OF 29 SHEETS		ILLINOIS	FED. AID PROJECT	

BEAM 1

Location	Station	Offset	Theoretical Grade Elevations	Theoretical Grade Elevations Adjusted For Dead Load Deflection and Grinding
Bk. of W. Abut.	308+80.25	-16.79	414.83	414.85
℄ Brg. W. Abut.	308+82.08	-16.79	414.83	414.85
A	308+92.08	-16.79	414.83	414.86
B	309+02.08	-16.79	414.84	414.86
C	309+12.08	-16.79	414.84	414.86
℄ Brg. Pier 1	309+21.71	-16.79	414.84	414.86
D	309+31.71	-16.79	414.84	414.88
E	309+41.71	-16.79	414.84	414.89
F	309+51.71	-16.79	414.84	414.90
G	309+61.71	-16.79	414.84	414.89
H	309+71.71	-16.79	414.84	414.86
℄ Brg. Pier 2	309+78.29	-16.79	414.83	414.85
I	309+88.29	-16.79	414.83	414.85
J	309+98.29	-16.79	414.82	414.85
K	310+08.29	-16.79	414.81	414.84
℄ Brg. E. Abut.	310+17.91	-16.79	414.81	414.83
Bk. of E. Abut.	310+19.75	-16.79	414.80	414.82

BEAM 2

Location	Station	Offset	Theoretical Grade Elevations	Theoretical Grade Elevations Adjusted For Dead Load Deflection and Grinding
Bk. of W. Abut.	308+80.25	-11.21	414.93	414.95
℄ Brg. W. Abut.	308+82.08	-11.21	414.93	414.95
A	308+92.08	-11.21	414.94	414.97
B	309+02.08	-11.21	414.94	414.97
C	309+12.08	-11.21	414.95	414.97
℄ Brg. Pier 1	309+21.71	-11.21	414.95	414.97
D	309+31.71	-11.21	414.95	414.98
E	309+41.71	-11.21	414.95	415.00
F	309+51.71	-11.21	414.95	415.00
G	309+61.71	-11.21	414.95	414.99
H	309+71.71	-11.21	414.94	414.97
℄ Brg. Pier 2	309+78.29	-11.21	414.94	414.96
I	309+88.29	-11.21	414.94	414.96
J	309+98.29	-11.21	414.93	414.96
K	310+08.29	-11.21	414.92	414.95
℄ Brg. E. Abut.	310+17.91	-11.21	414.91	414.94
Bk. of E. Abut.	310+19.75	-11.21	414.91	414.94

BEAM 3

Location	Station	Offset	Theoretical Grade Elevations	Theoretical Grade Elevations Adjusted For Dead Load Deflection and Grinding
Bk. of W. Abut.	308+80.25	-5.63	415.02	415.04
℄ Brg. W. Abut.	308+82.08	-5.63	415.02	415.04
A	308+92.08	-5.63	415.02	415.05
B	309+02.08	-5.63	415.03	415.06
C	309+12.08	-5.63	415.03	415.05
℄ Brg. Pier 1	309+21.71	-5.63	415.03	415.05
D	309+31.71	-5.63	415.04	415.07
E	309+41.71	-5.63	415.04	415.08
F	309+51.71	-5.63	415.03	415.09
G	309+61.71	-5.63	415.03	415.07
H	309+71.71	-5.63	415.03	415.06
℄ Brg. Pier 2	309+78.29	-5.63	415.03	415.05
I	309+88.29	-5.63	415.02	415.04
J	309+98.29	-5.63	415.01	415.04
K	310+08.29	-5.63	415.01	415.03
℄ Brg. E. Abut.	310+17.91	-5.63	415.00	415.02
Bk. of E. Abut.	310+19.75	-5.63	415.00	415.02

BEAM 4, ℄ E.B. LANES & P.G.

Location	Station	Offset	Theoretical Grade Elevations	Theoretical Grade Elevations Adjusted For Dead Load Deflection and Grinding
Bk. of W. Abut.	308+80.25	-0.04	415.10	415.12
℄ Brg. W. Abut.	308+82.08	-0.04	415.10	415.12
A	308+92.08	-0.04	415.11	415.14
B	309+02.08	-0.04	415.11	415.14
C	309+12.08	-0.04	415.12	415.14
℄ Brg. Pier 1	309+21.71	-0.04	415.12	415.14
D	309+31.71	-0.04	415.12	415.15
E	309+41.71	-0.04	415.12	415.17
F	309+51.71	-0.04	415.12	415.17
G	309+61.71	-0.04	415.12	415.16
H	309+71.71	-0.04	415.11	414.14
℄ Brg. Pier 2	309+78.29	-0.04	415.11	415.13
I	309+88.29	-0.04	415.11	415.13
J	309+98.29	-0.04	415.10	415.13
K	310+08.29	-0.04	415.09	415.12
℄ Brg. E. Abut.	310+17.91	-0.04	415.08	415.10
Bk. of E. Abut.	310+19.75	-0.04	415.08	415.10

BEAM 5

Location	Station	Offset	Theoretical Grade Elevations	Theoretical Grade Elevations Adjusted For Dead Load Deflection and Grinding
Bk. of W. Abut.	308+80.25	5.54	415.02	415.04
℄ Brg. W. Abut.	308+82.08	5.54	415.02	415.04
A	308+92.08	5.54	415.02	415.05
B	309+02.08	5.54	415.03	415.06
C	309+12.08	5.54	415.03	415.06
℄ Brg. Pier 1	309+21.71	5.54	415.04	415.06
D	309+31.71	5.54	415.04	415.07
E	309+41.71	5.54	415.04	415.08
F	309+51.71	5.54	415.04	415.09
G	309+61.71	5.54	415.03	415.08
H	309+71.71	5.54	415.03	415.06
℄ Brg. Pier 2	309+78.29	5.54	415.03	415.05
I	309+88.29	5.54	415.02	415.04
J	309+98.29	5.54	415.01	415.04
K	310+08.29	5.54	415.01	415.03
℄ Brg. E. Abut.	310+17.91	5.54	415.00	415.02
Bk. of E. Abut.	310+19.75	5.54	415.00	415.02

BEAM 6

Location	Station	Offset	Theoretical Grade Elevations	Theoretical Grade Elevations Adjusted For Dead Load Deflection and Grinding
Bk. of W. Abut.	308+80.25	11.12	414.93	414.96
℄ Brg. W. Abut.	308+82.08	11.12	414.93	414.96
A	308+92.08	11.12	414.94	414.97
B	309+02.08	11.12	414.95	414.97
C	309+12.08	11.12	414.95	414.97
℄ Brg. Pier 1	309+21.71	11.12	414.95	414.97
D	309+31.71	11.12	414.95	414.99
E	309+41.71	11.12	414.95	415.00
F	309+51.71	11.12	414.95	415.00
G	309+61.71	11.12	414.95	414.99
H	309+71.71	11.12	414.95	414.97
℄ Brg. Pier 2	309+78.29	11.12	414.94	414.96
I	309+88.29	11.12	414.94	414.96
J	309+98.29	11.12	414.93	414.96
K	310+08.29	11.12	414.92	414.95
℄ Brg. E. Abut.	310+17.91	11.12	414.91	414.94
Bk. of E. Abut.	310+19.75	11.12	414.91	414.93

℄ STRUCTURE

Location	Station	Offset	Theoretical Grade Elevations	Theoretical Grade Elevations Adjusted For Dead Load Deflection and Grinding
Bk. of W. Abut.	308+80.25	13.92	414.88	414.91
℄ Brg. W. Abut.	308+82.08	13.92	414.88	414.91
A	308+92.08	13.92	414.89	414.92
B	309+02.08	13.92	414.90	414.92
C	309+12.08	13.92	414.90	414.92
℄ Brg. Pier 1	309+21.71	13.92	414.90	414.92
D	309+31.71	13.92	414.90	414.94
E	309+41.71	13.92	414.90	414.95
F	309+51.71	13.92	414.90	414.95
G	309+61.71	13.92	414.90	414.94
H	309+71.71	13.92	414.90	414.92
℄ Brg. Pier 2	309+78.29	13.92	414.89	414.91
I	309+88.29	13.92	414.89	414.91
J	309+98.29	13.92	414.88	414.91
K	310+08.29	13.92	414.87	414.90
℄ Brg. E. Abut.	310+17.91	13.92	414.86	414.89
Bk. of E. Abut.	310+19.75	13.92	414.86	414.88

BEAM 7

Location	Station	Offset	Theoretical Grade Elevations	Theoretical Grade Elevations Adjusted For Dead Load Deflection and Grinding
Bk. of W. Abut.	308+80.25	16.71	414.83	414.85
℄ Brg. W. Abut.	308+82.08	16.71	414.83	414.85
A	308+92.08	16.71	414.83	414.86
B	309+02.08	16.71	414.84	414.87
C	309+12.08	16.71	414.84	414.86
℄ Brg. Pier 1	309+21.71	16.71	414.84	414.87
D	309+31.71	16.71	414.85	414.88
E	309+41.71	16.71	414.85	414.89
F	309+51.71	16.71	414.84	414.90
G	309+61.71	16.71	414.84	414.88
H	309+71.71	16.71	414.84	414.87
℄ Brg. Pier 2	309+78.29	16.71	414.84	414.86
I	309+88.29	16.71	414.83	414.85
J	309+98.29	16.71	414.82	414.85
K	310+08.29	16.71	414.82	414.84
℄ Brg. E. Abut.	310+17.91	16.71	414.81	414.83
Bk. of E. Abut.	310+19.75	16.71	414.81	414.83

BEAM 8

Location	Station	Offset	Theoretical Grade Elevations	Theoretical Grade Elevations Adjusted For Dead Load Deflection and Grinding
Bk. of W. Abut.	308+80.25	22.29	414.72	414.74
℄ Brg. W. Abut.	308+82.08	22.29	414.72	414.74
A	308+92.08	22.29	414.72	414.75
B	309+02.08	22.29	414.73	414.75
C	309+12.08	22.29	414.73	414.75
℄ Brg. Pier 1	309+21.71	22.29	414.73	414.75
D	309+31.71	22.29	414.73	414.77
E	309+41.71	22.29	414.73	414.78
F	309+51.71	22.29	414.73	414.78
G	309+61.71	22.29	414.73	414.77
H	309+71.71	22.29	414.73	414.75
℄ Brg. Pier 2	309+78.29	22.29	414.72	414.74
I	309+88.29	22.29	414.72	414.74
J	309+98.29	22.29	414.71	414.74
K	310+08.29	22.29	414.70	414.73
℄ Brg. E. Abut.	310+17.91	22.29	414.70	414.72
Bk. of E. Abut.	310+19.75	22.29	414.70	414.72

BEAM 9

Location	Station	Offset	Theoretical Grade Elevations	Theoretical Grade Elevations Adjusted For Dead Load Deflection and Grinding
Bk. of W. Abut.	308+80.25	27.87	414.60	414.62
℄ Brg. W. Abut.	308+82.08	27.87	414.60	414.62
A	308+92.08	27.87	414.61	414.64
B	309+02.08	27.87	414.62	414.64
C	309+12.08	27.87	414.62	414.64
℄ Brg. Pier 1	309+21.71	27.87	414.62	414.64
D	309+31.71	27.87	414.62	414.66
E	309+41.71	27.87	414.62	414.67
F	309+51.71	27.87	414.62	414.67
G	309+61.71	27.87	414.62	414.66
H	309+71.71	27.87	414.62	414.64
℄ Brg. Pier 2	309+78.29	27.87	414.61	414.63
I	309+88.29	27.87	414.61	414.63
J	309+98.29	27.87	414.60	414.63
K	310+08.29	27.87	414.59	414.62
℄ Brg. E. Abut.	310+17.91	27.87	414.58	414.61
Bk. of E. Abut.	310+19.75	27.87	414.58	414.61

BEAM 10

Location	Station	Offset	Theoretical Grade Elevations	Theoretical Grade Elevations Adjusted For Dead Load Deflection and Grinding
Bk. of W. Abut.	308+80.25	33.46	414.49	414.51
℄ Brg. W. Abut.	308+82.08	33.46	414.49	414.51
A	308+92.08	33.46	414.50	414.53
B	309+02.08	33.46	414.50	414.53
C	309+12.08	33.46	414.51	414.53
℄ Brg. Pier 1	309+21.71	33.46	414.51	414.53
D	309+31.71	33.46	414.51	414.54
E	309+41.71	33.46	414.51	414.56
F	309+51.71	33.46	414.51	414.56
G	309+61.71	33.46	414.51	414.55
H	309+71.71	33.46	414.50	414.53
℄ Brg. Pier 2	309+78.29	33.46	414.50	414.52
I	309+88.29	33.46	414.50	414.52
J	309+98.29	33.46	414.49	414.52
K	310+08.29	33.46	414.48	414.51
℄ Brg. E. Abut.	310+17.91	33.46	414.47	414.49
Bk. of E. Abut.	310+19.75	33.46	414.47	414.49

BEAM 11

Location	Station	Offset	Theoretical Grade Elevations	Theoretical Grade Elevations Adjusted For Dead Load Deflection and Grinding
Bk. of W. Abut.	308+80.25	39.04	414.38	414.40
℄ Brg. W. Abut.	308+82.08	39.04	414.38	414.40
A	308+92.08	39.04	414.39	414.41
B	309+02.08	39.04	414.39	414.42
C	309+12.08	39.04	414.40	414.42
℄ Brg. Pier 1	309+21.71	39.04	414.40	414.42
D	309+31.71	39.04	414.40	414.43
E	309+41.71	39.04	414.40	414.45
F	309+51.71	39.04	414.40	414.45
G	309+61.71	39.04	414.40	414.44
H	309+71.71	39.04	414.39	414.42
℄ Brg. Pier 2	309+78.29	39.04	414.39	414.41
I	309+88.29	39.04	414.38	414.41
J	309+98.29	39.04	414.38	414.40
K	310+08.29	39.04	414.37	414.40
℄ Brg. E. Abut.	310+17.91	39.04	414.36	414.38
Bk. of E. Abut.	310+19.75	39.04	414.36	414.38

BEAM 12

Location	Station	Offset	Theoretical Grade Elevations	Theoretical Grade Elevations Adjusted For Dead Load Deflection and Grinding
Bk. of W. Abut.	308+80.25	44.62	414.27	414.29
℄ Brg. W. Abut.	308+82.08	44.62	414.27	414.29
A	308+92.08	44.62	414.28	414.30
B	309+02.08	44.62	414.28	414.31
C	309+12.08	44.62	414.28	414.31
℄ Brg. Pier 1	309+21.71	44.62	414.29	414.31
D	309+31.71	44.62	414.29	414.32
E	309+41.71	44.62	414.29	414.33
F	309+51.71	44.62	414.29	414.34
G	309+61.71	44.62	414.28	414.33
H	309+71.71	44.62	414.28	414.31
℄ Brg. Pier 2	309+78.29	44.62	414.28	414.30
I	309+88.29	44.62	414.27	414.29
J	309+98.29	44.62	414.27	414.29
K	310+08.29	44.62	414.26	414.29
℄ Brg. E. Abut.	310+17.91	44.62	414.25	414.27
Bk. of E. Abut.	310+19.75	44.62	414.25	414.27

NORTH EDGE OF SHOULDER

Location	Station	Offset	Theoretical Grade Elevations	Theoretical Grade Elevations Adjusted For Grinding
W. End West Appr. Slab	308+51.25	-18.00	414.78	414.80
A1	308+61.25	-18.00	414.79	414.81
A2	308+71.25	-18.00	414.79	414.81
E. End West Appr. Slab	308+81.25	-18.00	414.80	414.82

NORTH EDGE OF PAVEMENT

Location	Station	Offset	Theoretical Grade Elevations	Theoretical Grade Elevations Adjusted For Grinding
W. End West Appr. Slab	308+51.25	-12.00	414.90	414.92
A1	308+61.25	-12.00	414.91	414.93
A2	308+71.25	-12.00	414.91	414.93
E. End West Appr. Slab	308+81.25	-12.00	414.92	414.94

℄ E.B. IL 13 & P.G.

Location	Station	Offset	Theoretical Grade Elevations	Theoretical Grade Elevations Adjusted For Grinding
W. End West Appr. Slab	308+51.25	0.00	415.08	415.10
A1	308+61.25	0.00	415.09	415.11
A2	308+71.25	0.00	415.09	415.11
E. End West Appr. Slab	308+81.25	0.00	415.10	415.12

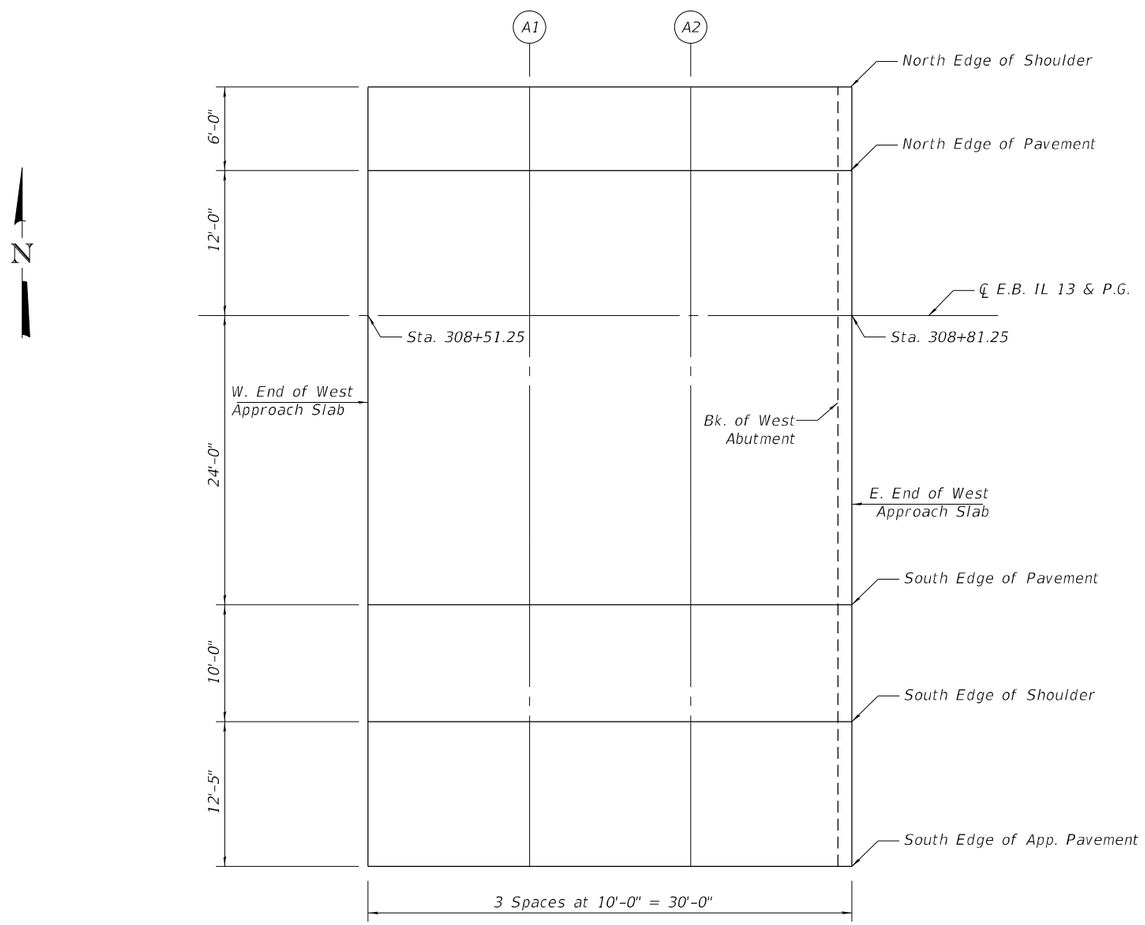

PLAN
(West Approach)

SOUTH EDGE OF PAVEMENT

Location	Station	Offset	Theoretical Grade Elevations	Theoretical Grade Elevations Adjusted For Grinding
W. End West Appr. Slab	308+51.25	24.00	414.66	414.68
A1	308+61.25	24.00	414.67	414.69
A2	308+71.25	24.00	414.67	414.69
E. End West Appr. Slab	308+81.25	24.00	414.68	414.70

SOUTH EDGE OF SHOULDER

Location	Station	Offset	Theoretical Grade Elevations	Theoretical Grade Elevations Adjusted For Grinding
W. End West Appr. Slab	308+51.25	34.00	414.46	414.48
A1	308+61.25	34.00	414.47	414.49
A2	308+71.25	34.00	414.47	414.49
E. End West Appr. Slab	308+81.25	34.00	414.48	414.50

SOUTH EDGE OF APP. PAVEMENT

Location	Station	Offset	Theoretical Grade Elevations	Theoretical Grade Elevations Adjusted For Grinding
W. End West Appr. Slab	308+51.25	46.42	414.21	414.23
A1	308+61.25	46.42	414.22	414.24
A2	308+71.25	46.42	414.23	414.25
E. End West Appr. Slab	308+81.25	46.42	414.23	414.25

E-AS1 2-17-2017

NORTH EDGE OF SHOULDER

Location	Station	Offset	Theoretical Grade Elevations	Theoretical Grade Elevations Adjusted For Grinding
W. End East Appr. Slab	310+18.75	-18.00	414.78	414.80
A3	310+28.75	-18.00	414.77	414.79
A4	310+38.75	-18.00	414.76	414.78
E. End East Appr. Slab	310+48.75	-18.00	414.75	414.77

NORTH EDGE OF PAVEMENT

Location	Station	Offset	Theoretical Grade Elevations	Theoretical Grade Elevations Adjusted For Grinding
W. End East Appr. Slab	310+18.75	-12.00	414.90	414.92
A3	310+28.75	-12.00	414.89	414.91
A4	310+38.75	-12.00	414.88	414.90
E. End East Appr. Slab	310+48.75	-12.00	414.87	414.89

℄ E.B. IL 13 & P.G.

Location	Station	Offset	Theoretical Grade Elevations	Theoretical Grade Elevations Adjusted For Grinding
W. End East Appr. Slab	310+18.75	0.00	415.08	415.10
A3	310+28.75	0.00	415.07	415.09
A4	310+38.75	0.00	415.06	415.08
E. End East Appr. Slab	310+48.75	0.00	415.05	415.05

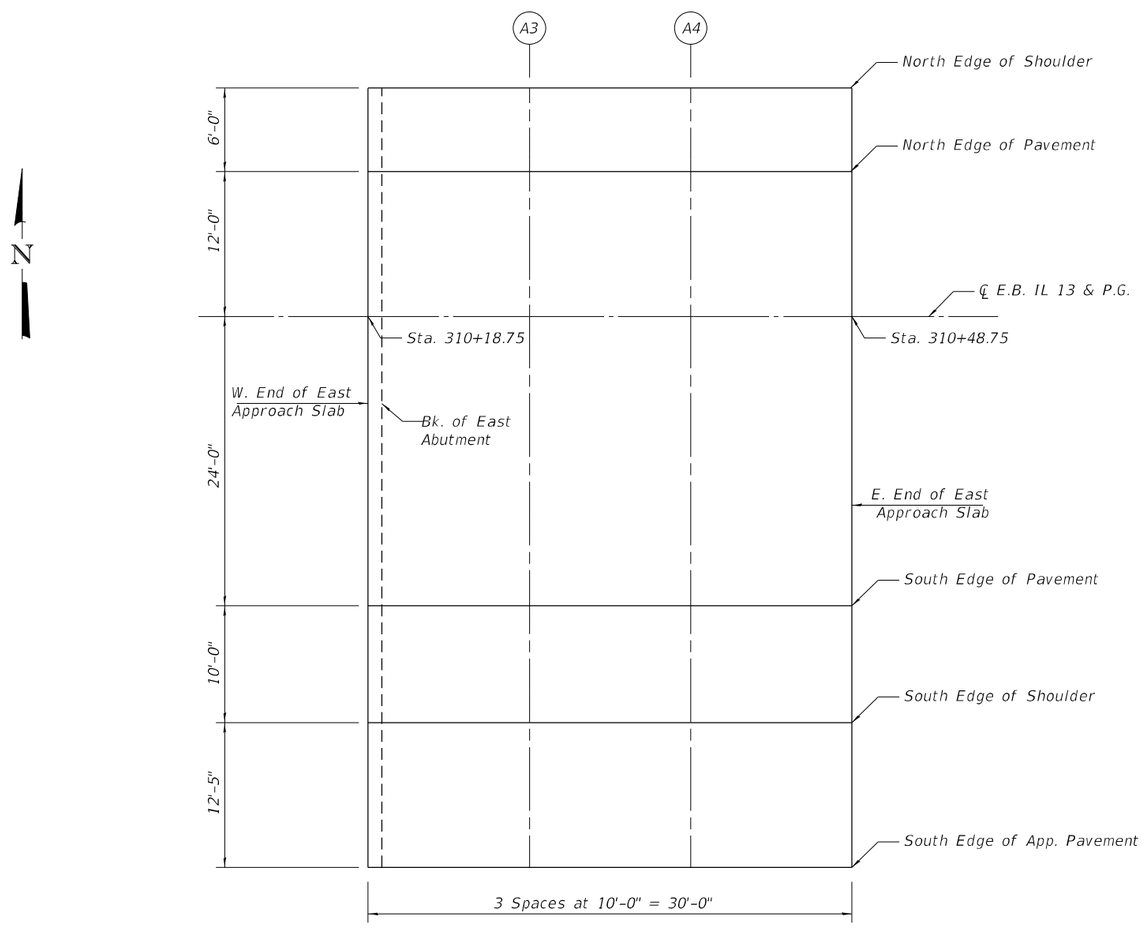

PLAN
(East Approach)

SOUTH EDGE OF PAVEMENT

Location	Station	Offset	Theoretical Grade Elevations	Theoretical Grade Elevations Adjusted For Grinding
W. End East Appr. Slab	310+18.75	24.00	414.66	414.68
A3	310+28.75	24.00	414.65	414.67
A4	310+38.75	24.00	414.64	414.66
E. End East Appr. Slab	310+48.75	24.00	414.63	414.65

SOUTH EDGE OF SHOULDER

Location	Station	Offset	Theoretical Grade Elevations	Theoretical Grade Elevations Adjusted For Grinding
W. End East Appr. Slab	310+18.75	34.00	414.46	414.48
A3	310+28.75	34.00	414.45	414.78
A4	310+38.75	34.00	414.44	414.46
E. End East Appr. Slab	310+48.75	34.00	414.43	414.45

SOUTH EDGE OF APP. PAVEMENT

Location	Station	Offset	Theoretical Grade Elevations	Theoretical Grade Elevations Adjusted For Grinding
W. End West Appr. Slab	308+51.25	46.42	414.21	414.23
A3	308+61.25	46.42	414.20	414.22
A4	308+71.25	46.42	414.19	414.21
E. End West Appr. Slab	308+81.25	46.42	414.18	414.20

E-AS1 2-17-2017

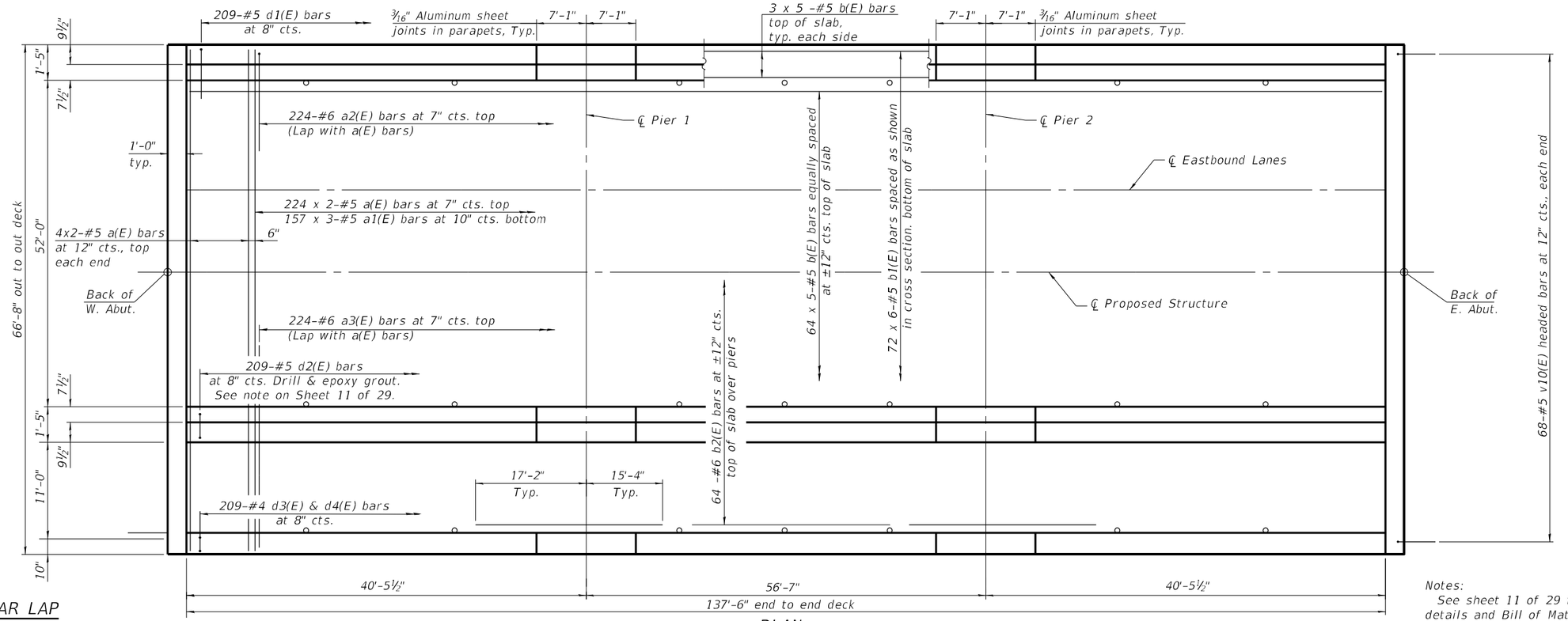

PLAN

Notes:
See sheet 11 of 29 for superstructure details and Bill of Material.
Bars indicated thus 20 x 3-#5 etc. indicates 20 lines of bars with 3 lengths per line.

MINIMUM BAR LAP

#5 bar = 3'-6"
#6 bar = 3'-7"

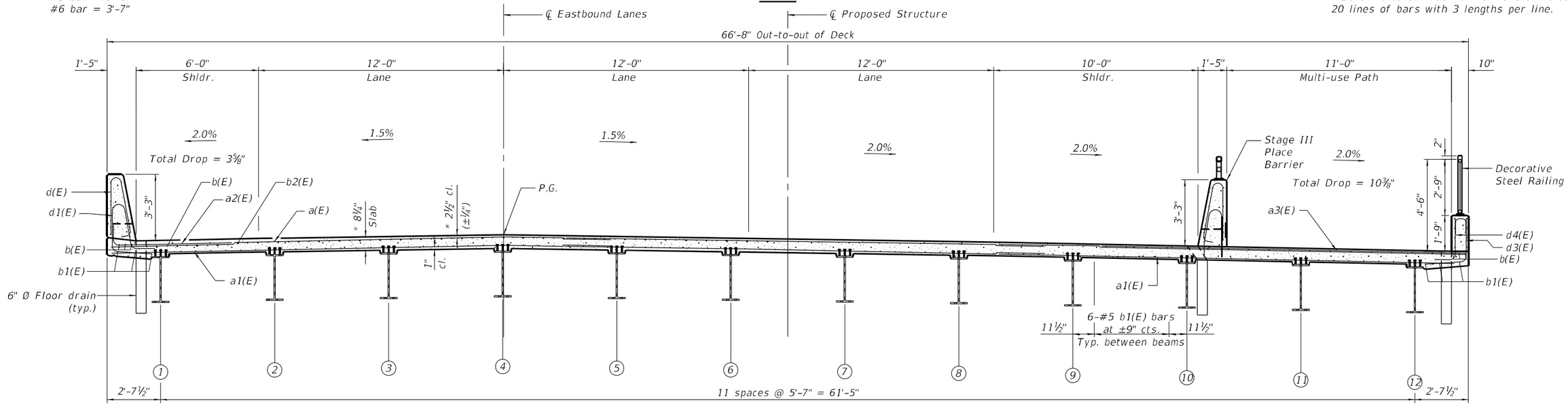

NEAR PIER

CROSS SECTION

(Looking East)
* Prior to grinding

NEAR MIDSPAN

CDI CIVIL DESIGN, INC. WBE / DBE EFFINGHAM, IL LICENSE #184.003222	USER NAME =	DESIGNED – JAG	REVISED –	STATE OF ILLINOIS DEPARTMENT OF TRANSPORTATION	SUPERSTRUCTURE PLAN STRUCTURE NO. 100-0106	F.A.P. RTE. 331	SECTION (1-4)R-5,RS-2,B-1,B-2,B-3,B-4
		CHECKED – JGS	REVISED –			COUNTY WILLIAMSON	TOTAL SHEETS 519 / SHEET NO. 219
	PLOT SCALE =	DRAWN – JAG	REVISED –			CONTRACT NO. 78373	
	PLOT DATE =	CHECKED – JGS	REVISED –		SHEET 9 OF 29 SHEETS	ILLINOIS FED. AID PROJECT	

MODEL: Default
FILE NAME: P:\XXX\50XX-51XX\5000 - IDOT PTB 200-038 D9 IL 13 Crab Orchard Bridges\24-Structures\CAD-MS\100-0106-78373-009-Superstructure Plan.dgn
3/11/2025 5:54:54 AM

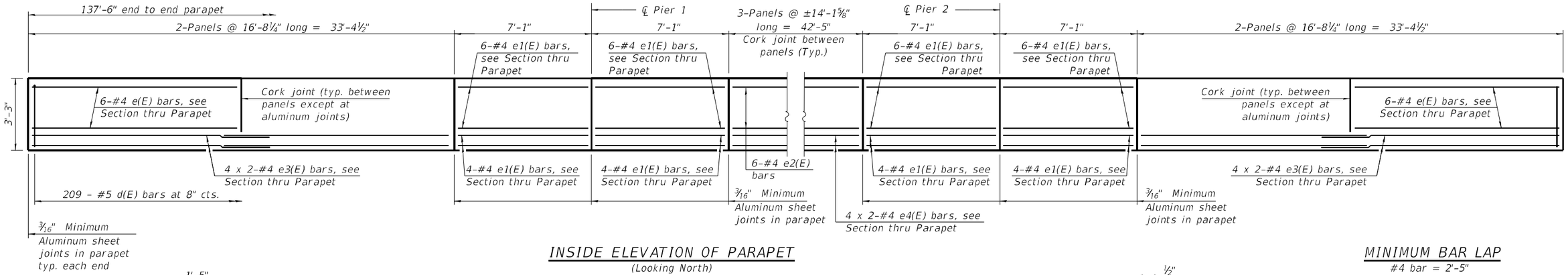

INSIDE ELEVATION OF PARAPET

(Looking North)
(North parapet shown, South parapet mirrored)

MINIMUM BAR LAP

#4 bar = 2'-5"

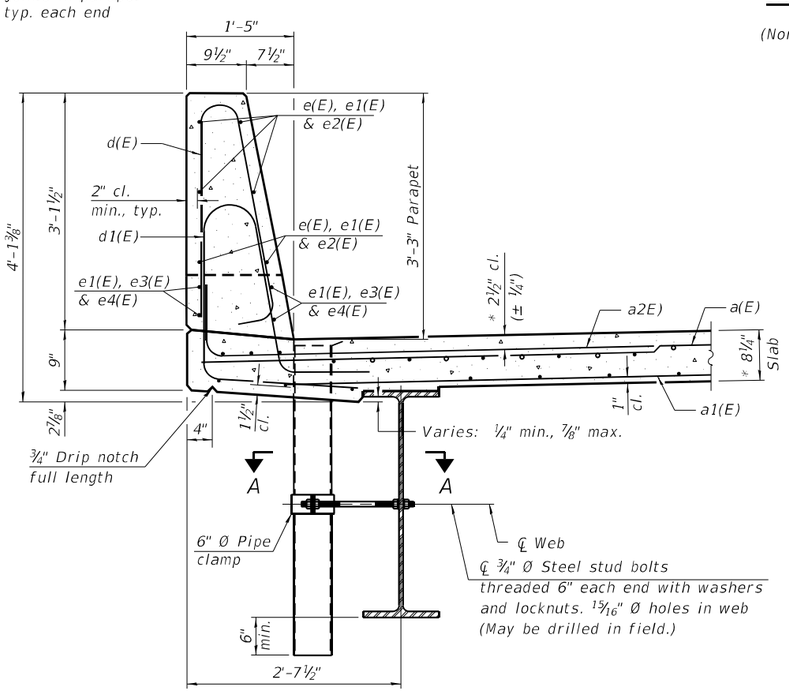

* Prior to grinding

SECTION THRU PARAPET

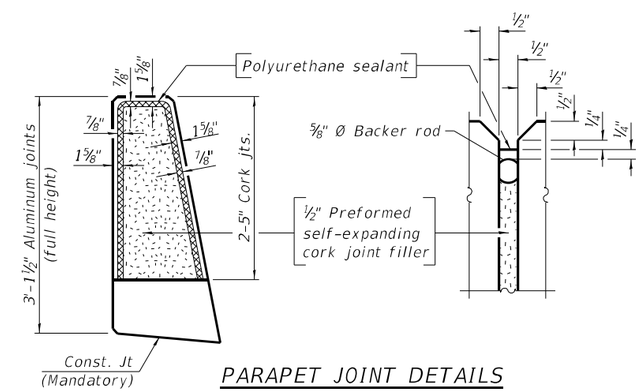

PARAPET JOINT DETAILS

Notes:

Fiberglass pipe shall conform to ASTM D2996, with short-time rupture strength hoop tensile stress of 30,000 p.s.i. minimum.

The exterior surfaces of the floor drains shall be painted according to Article 506 with the finish coat as specified. The exterior surfaces of the drains shall be cleaned according to the Society of Protective Coating's Spec. SSPC-SP1 prior to painting.

The top portion of aluminum floor drains shall be coated with 5 mils of either bitumen paint or epoxy paint to minimize reaction with wet concrete.

The clamping device shall be galvanized according to AASHTO M 232. Cost of clamping device included with Floor Drains.

The 3/16" Min. aluminum sheet shall be ASTM B 209 alloy 3003-H14 and coated with 5 mils of either bitumen paint or epoxy paint to minimize reaction with wet concrete. Cost included with Concrete Superstructure.

The polyurethane sealant shall be according to Article 1050.04 of the Std. Spec. and the color shall be gray.

Bar terminators paid for separately. See Total Bill of Material.

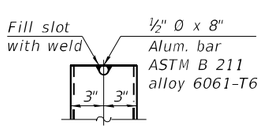

ALUMINUM TUBE

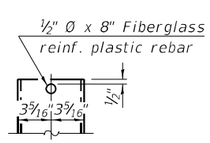

FIBERGLASS PIPE

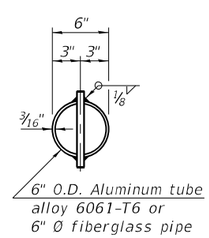

TOP PLAN

(Showing aluminum tube)

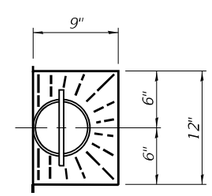

TOP PLAN

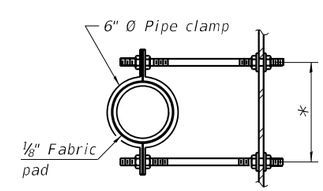

SECTION A-A

*Dimension as required by pipe clamp

SDI-SB-2 10-27-2023

MODEL: Default
FILE NAME: P:\5XXX\50XX-51XX\5000 - IDOT PTB 200-038 D9 IL 13 Crab Orchard Bridges\24-Structures\CAD-MS\100-0106-78373-010-Superstructure Details 1.dgn
3/11/2025 5:55:19 AM

CDI CIVIL DESIGN, INC. WBE / DBE EFFINGHAM, IL LICENSE #184.003222

USER NAME =	DESIGNED – JAG	REVISED –	
	CHECKED – JGS	REVISED –	
PLOT SCALE =	DRAWN – JAG	REVISED –	
PLOT DATE =	CHECKED – JGS	REVISED –	

STATE OF ILLINOIS
DEPARTMENT OF TRANSPORTATION

SUPERSTRUCTURE DETAILS 1
STRUCTURE NO. 100-0106

SHEET 10 OF 29 SHEETS

F.A.P. RTE.	SECTION	COUNTY	TOTAL SHEETS	SHEET NO.
331	(1-4)R-5,RS-2,B-1,B-2,B-3,B-4	WILLIAMSON	519	220
		CONTRACT NO. 78373		
		ILLINOIS FED. AID PROJECT		

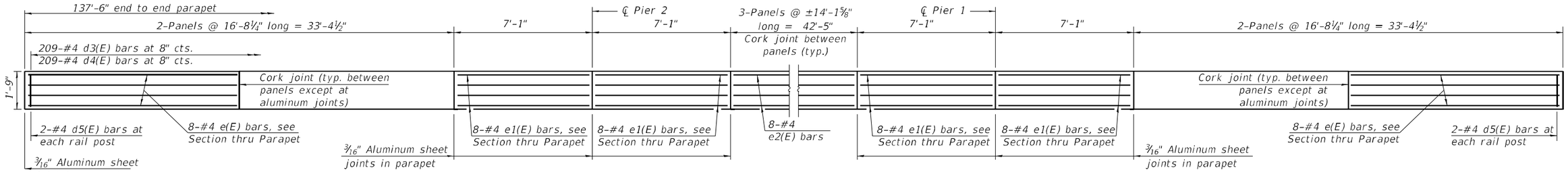

INSIDE ELEVATION OF PARAPET

(Looking South)

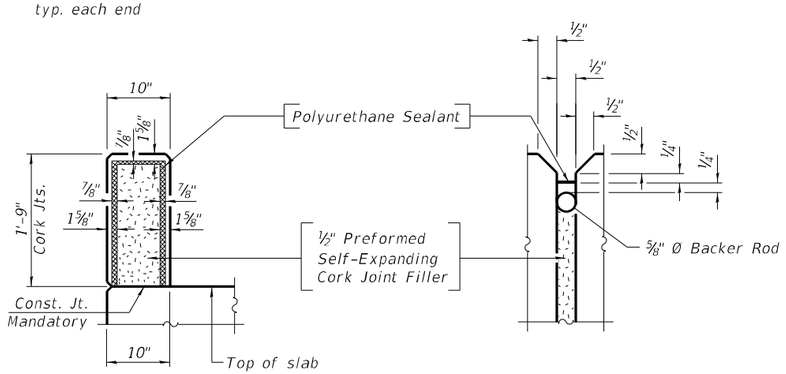

MINIMUM BAR LAP

#4 bar = 2'-5"

** Drill and set #5 d2(E) bar according to Article 509.06 of the Standard Specifications. Drilled holes shall be roughened or scored per manufacturer's recommendations. Maximum depth of hole shall not exceed 6". Contractor shall take all necessary precautions to prevent drilled hole interference with deck reinforcement bars. Locate longitudinal bars to miss drilled locations. Locate drilled holes to miss transverse bars in deck. Traverse bars shall be set to miss the pipe drains.

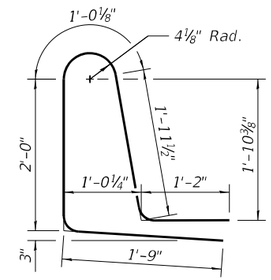

BAR d1(E)

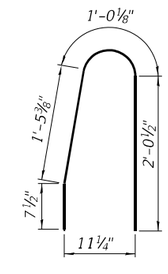

BAR d2(E)

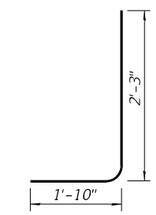

BAR d3(E)

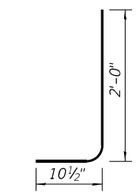

BAR d4(E)

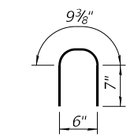

BAR d5(E)

PARAPET JOINT DETAILS

Notes:
The Polyurethane Sealant shall be according to Article 1050.04 of the Std. Spec. and the color shall be gray.

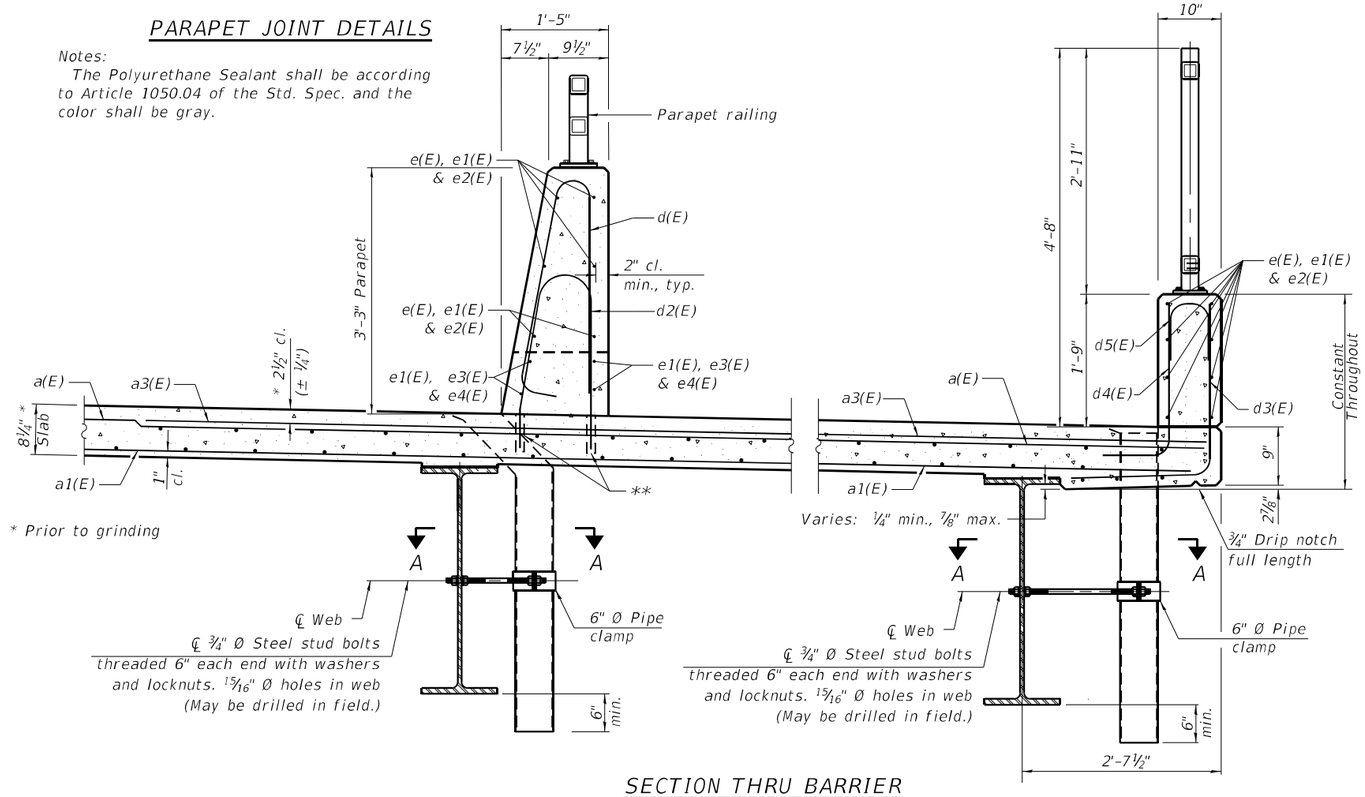

SECTION THRU BARRIER

(See sheet 10 of 29 for Section A-A)

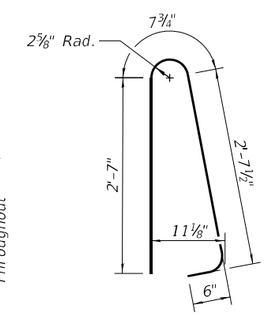

BAR d(E)

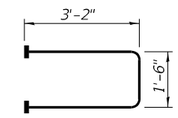

BAR s10(E)

(Headed. 244-#5 Bar terminators)

BAR v10(E)

(Headed. 136-#5 Bar terminators)

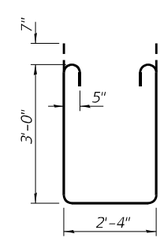

BAR s11(E)

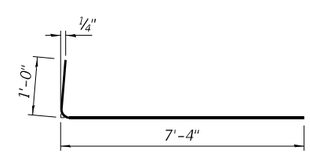

BAR a2(E)

SUPERSTRUCTURE BILL OF MATERIAL

Bar	No.	Size	Length	Shape
a(E)	464	#5	34'-11"	
a1(E)	471	#5	24'-6"	
a2(E)	224	#6	8'-4"	
a3(E)	224	#6	20'-2"	
b(E)	350	#5	30'-3"	
b1(E)	432	#5	26'-5"	
b2(E)	128	#6	32'-6"	
d(E)	418	#5	6'-5"	
d1(E)	209	#5	7'-9"	
d2(E)	209	#5	5'-2"	
d3(E)	209	#4	4'-1"	
d4(E)	209	#4	2'-11"	
d5(E)	66	#4	2'-0"	
e(E)	80	#4	16'-10"	
e1(E)	112	#4	6'-9"	
e2(E)	60	#4	13'-9"	
e3(E)	32	#4	17'-9"	
e4(E)	16	#4	23'-0"	
m10(E)	12	#6	34'-0"	
m11(E)	66	#6	5'-3"	
m12(E)	12	#6	2'-3"	
s10(E)	122	#5	7'-10"	
s11(E)	122	#5	9'-6"	
v10(E)	136	#5	3'-5"	
Concrete Superstructure			Cu. Yd.	276.7
Reinforcement Bars, Epoxy Coated			Pound	80,860

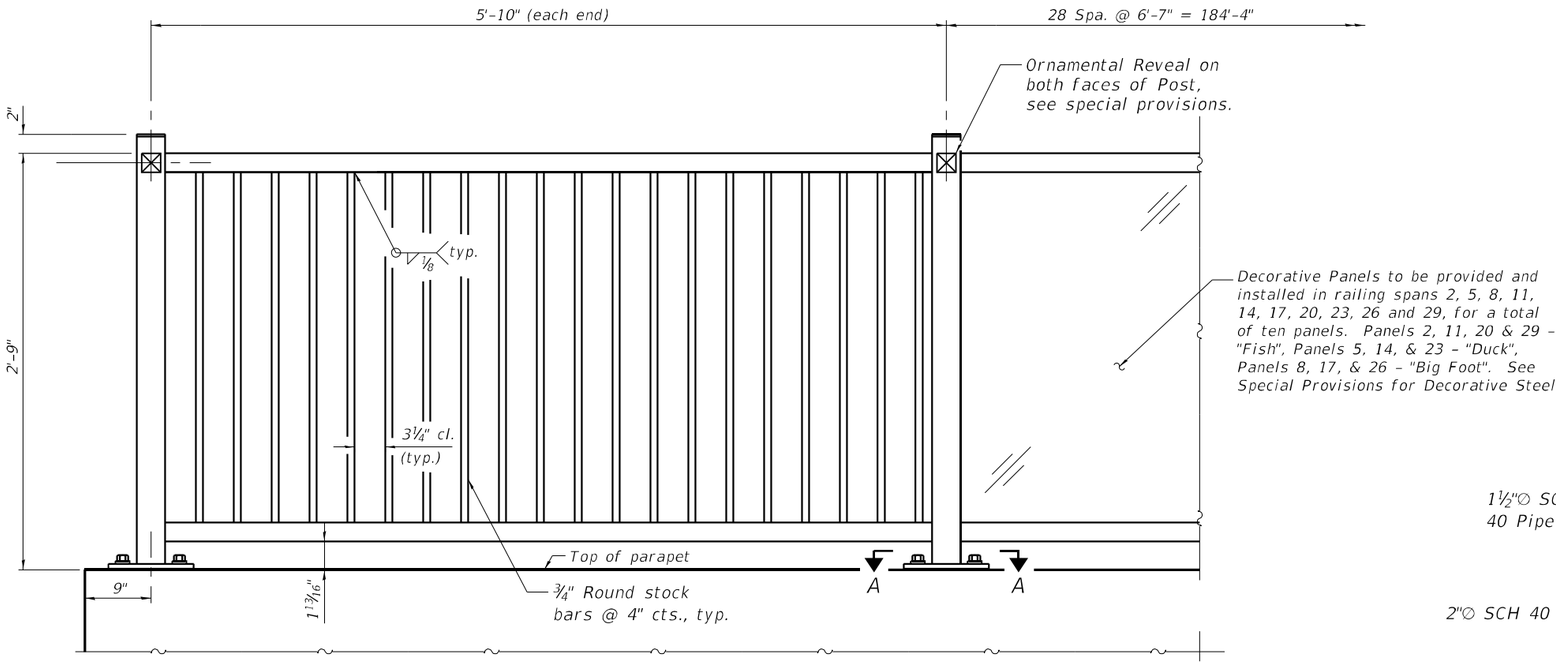

DECORATIVE STEEL RAILING ELEVATION

(Inside face)

Aesthetic details to be coordinated with the District

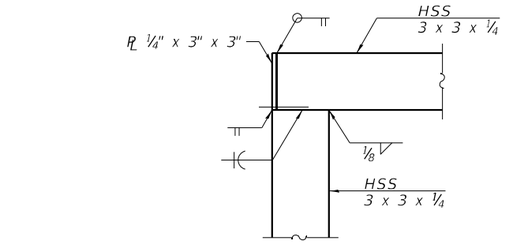

DETAIL A

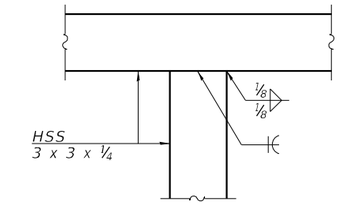

DETAIL B

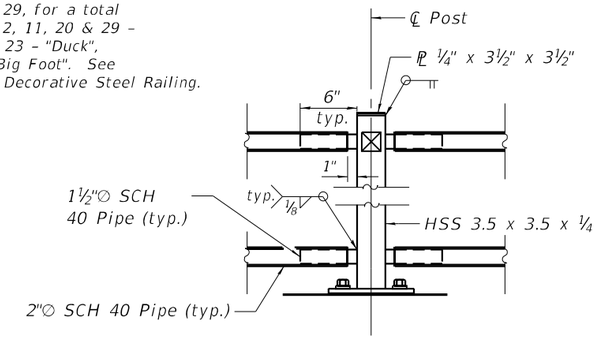

DECORATIVE STEEL RAILING POST

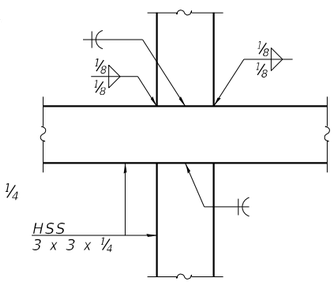

DETAIL C

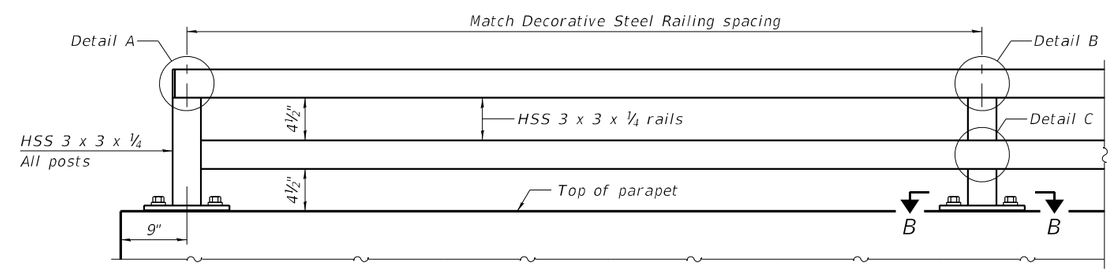

ELEVATION OF SOUTH PARAPET RAILING

(Inside face)

Notes:
All post, railing, splices, anchor devices and bent plates shall be painted black.

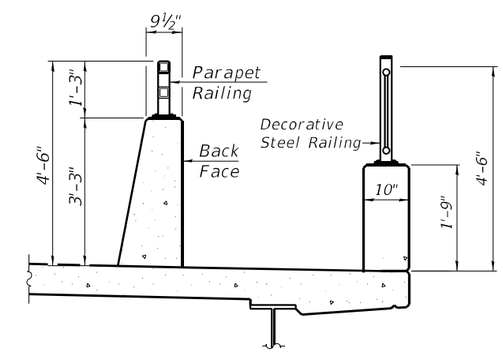

SECTION THRU DECK

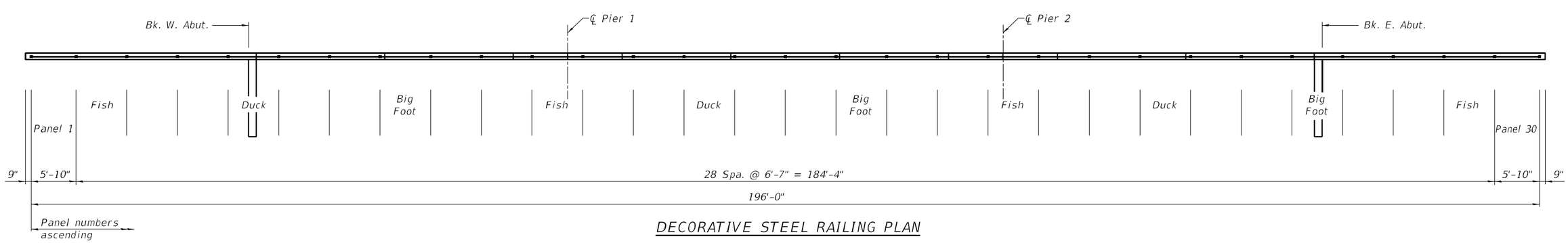

DECORATIVE STEEL RAILING PLAN

MODEL: Default
FILE NAME: P:\5XXX\50XX-51XX\5000 - IDOT PTB 200-038 D9 IL 13 Crab Orchard Bridges\24-Structures\CAD-MS\100-0106-78373-012-Superstructure Details 3.dgn
3/11/2025 5:56:09 AM

CDI CIVIL DESIGN, INC. WBE | DBE EFFINGHAM, IL LICENSE #184.003222	USER NAME =	DESIGNED – JAG	REVISED –
		CHECKED – JGS	REVISED –
	PLOT SCALE =	DRAWN – JAG	REVISED –
	PLOT DATE =	CHECKED – JGS	REVISED –

STATE OF ILLINOIS
DEPARTMENT OF TRANSPORTATION

SUPERSTRUCTURE DETAILS 3
STRUCTURE NO. 100-0106

SHEET 12 OF 29 SHEETS

F.A.P. RTE.	SECTION	COUNTY	TOTAL SHEETS	SHEET NO.
331	(1-4)R-5,RS-2,B-1,B-2,B-3,B-4	WILLIAMSON	519	222
		CONTRACT NO. 78373		
	ILLINOIS	FED. AID PROJECT		

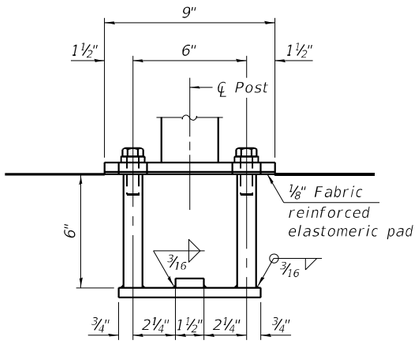

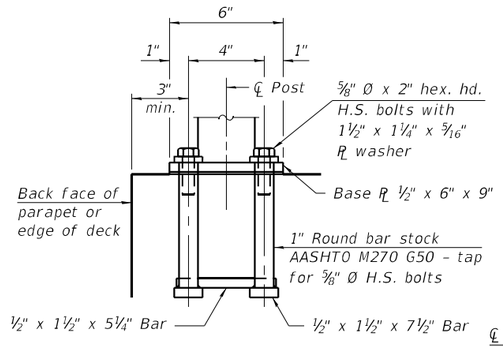

ANCHORAGE ASSEMBLY

In lieu of the cast-in-place anchor device shown, the Contractor has the option of drilling and setting ⅝"Ø fully threaded anchor rods with the same plate washers as specified above and heavy hex lock nuts according to Article 509.06 of the Standard Specifications. Embedment shall be according to the manufacturer's specifications.

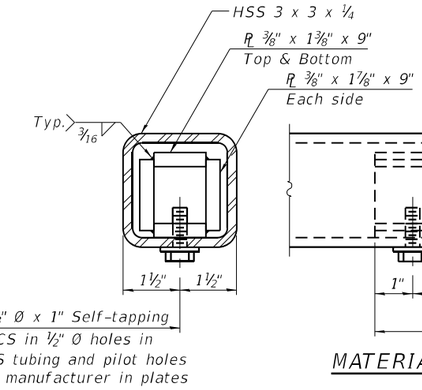

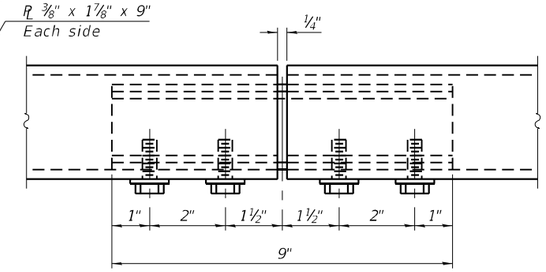

MATERIAL SPLICE

Notes:

Place reinforcement bars to miss anchor rod locations.

CVN testing is not required for the HSS tubing used in the Bicycle Railing.

All HSS tubing used for the Parapet Railing shall be CVN tested according to Article 1006.34(b) of the Standard Specifications.

All HSS tubing used for the Parapet Railing shall be ASTM A500 grade C.

All base plates used for the Parapet Railing shall be AASHTO M270 grade 50.

All heavy hex nuts shall be according to ASTM A 563 grade DH.

All fully threaded anchor rods shall be ASTM F1554 grade 105.

The post base plate shall be fastened to the curb snug tight and given an additional ⅛" turn.

Rail splice inserts may be built out of bent plates of the same thicknesses and outside geometry limits as the 4 plate rail splice inserts shown.

When the contract specifies a galvanized railing, all steel rail elements shall be galvanized according to Article 509.05 of the Standard Specifications. When the contract specifies a painted railing, all posts, rail, splices, anchor devices and plates of the railing shall be painted according to the paint system for railings as specified in the General Notes.

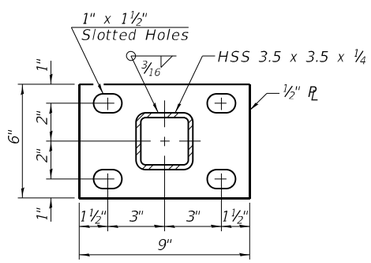

SECTION A-A

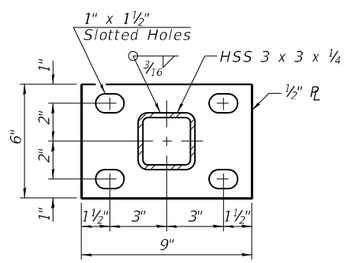

SECTION B-B

BILL OF MATERIAL

Item	Unit	Quantity
Decorative Steel Railing	Foot	196.0
Parapet Railing	Foot	196.0

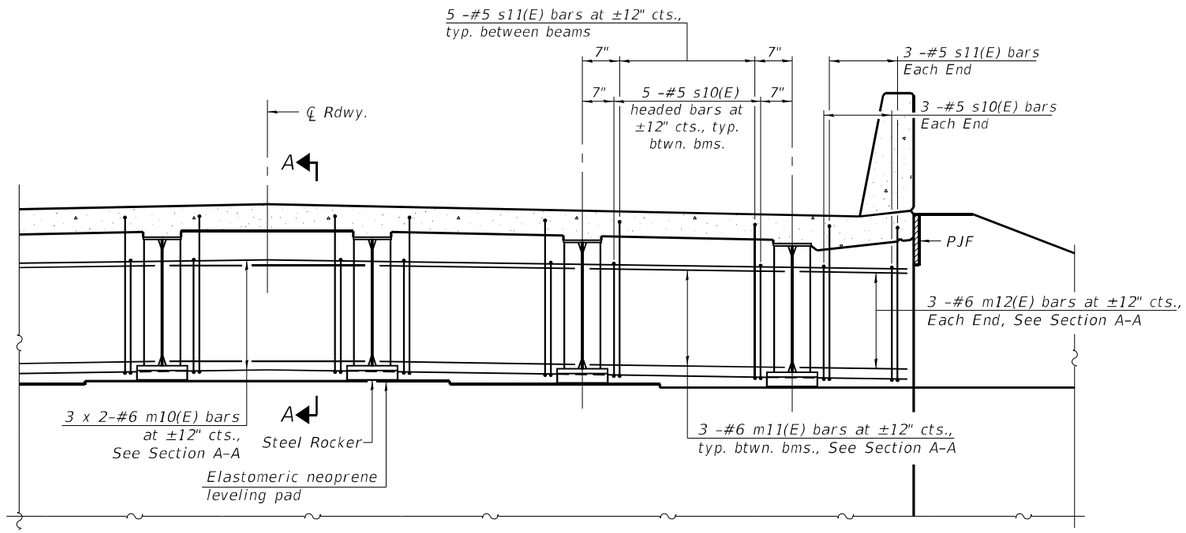

DIAPHRAGM AT ABUTMENT

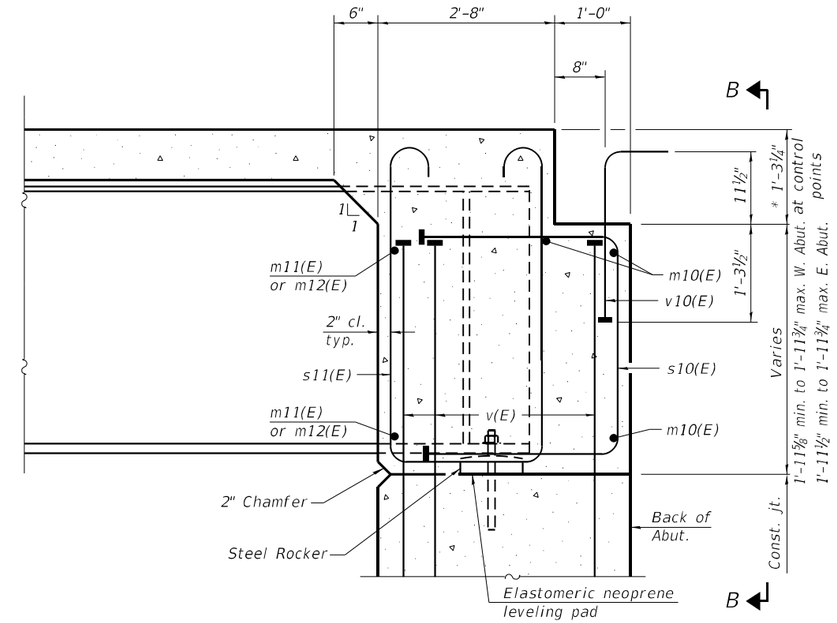

SECTION A-A

* Prior to grinding.

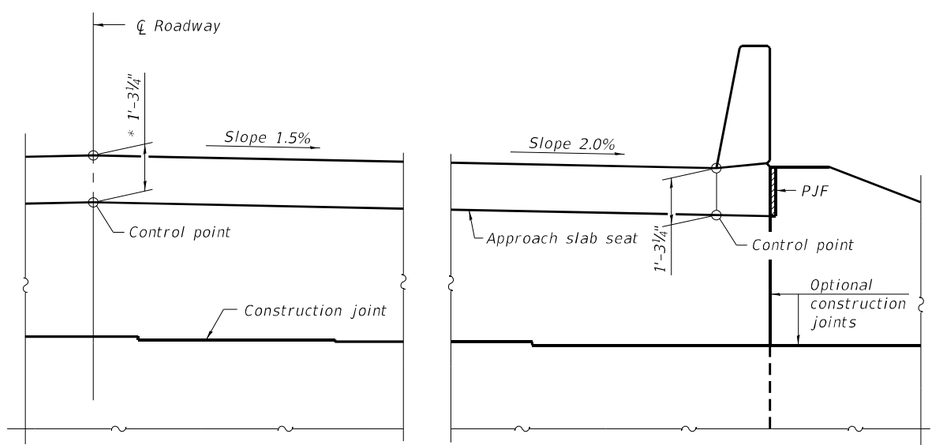

VIEW B-B

* Prior to grinding.

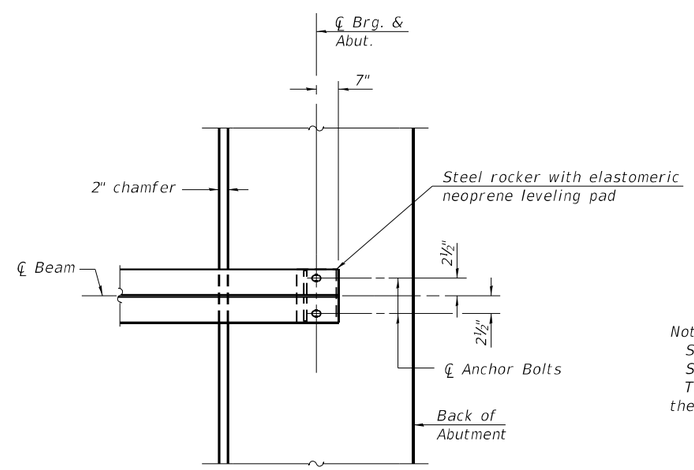

PLAN AT ABUTMENT

(Showing bottom flange of beam)

Notes:

See sheet 11 of 29 for superstructure details and Bill of Material.

See sheet 15 of 29 for PJF details.

The approach slab seat shall have a constant slope determined from the control points shown.

DIA-SB-0 2-1-2023

CDI CIVIL DESIGN, INC. WBE / DBE EFFINGHAM, IL LICENSE #184.003222	USER NAME =	DESIGNED – JAG	REVISED –	STATE OF ILLINOIS DEPARTMENT OF TRANSPORTATION	DIAPHRAGM DETAILS STRUCTURE NO. 100-0106	F.A.P. RTE.	SECTION	COUNTY	TOTAL SHEETS	SHEET NO.
		CHECKED – JGS	REVISED –			331	(1-4)R-5,RS-2,B-1,B-2,B-3,B-4	WILLIAMSON	519	224
	PLOT SCALE =	DRAWN – JAG	REVISED –			CONTRACT NO. 78373				
	PLOT DATE =	CHECKED – JGS	REVISED –		SHEET 14 OF 29 SHEETS	ILLINOIS	FED. AID PROJECT			

MODEL: Default
FILE NAME: P:\5XX\50XX-51XX\5000 - IDOT PTB 200-038 D9 IL 13 Crab Orchard Bridges\24-Structures\CAD-MS\100-0106-78373-014-Diaphragm Details.dgn

3/11/2025 5:57:01 AM

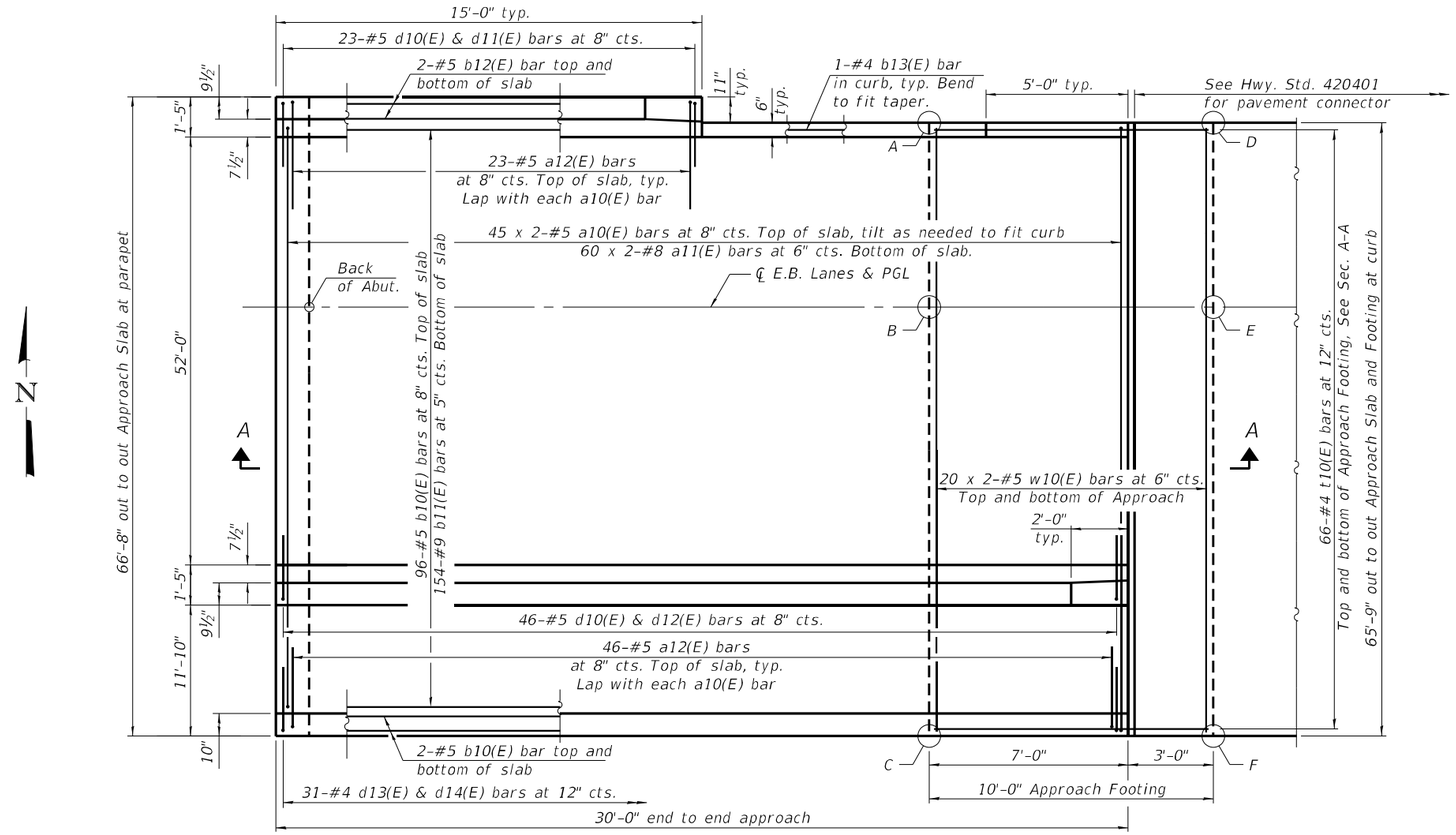

PLAN

(East approach slab shown; West approach slab similar by 180° rotation)

TOP AND BOTTOM ELEVATIONS FOR APPROACH FOOTING

East Approach			West Approach		
Point/ Location	Top	Bottom	Point/ Location	Top	Bottom
A - NW	413.51	412.68	A - NW	413.55	412.72
B - WCL	413.81	412.97	B - WCL	413.85	413.01
C - SW	412.94	412.11	C - SW	412.98	412.15
D - NE	413.49	412.66	D - NE	413.55	412.72
E - ECL	413.79	412.96	E - ECL	413.85	413.02
F - SE	412.92	412.09	F - SE	412.98	412.15

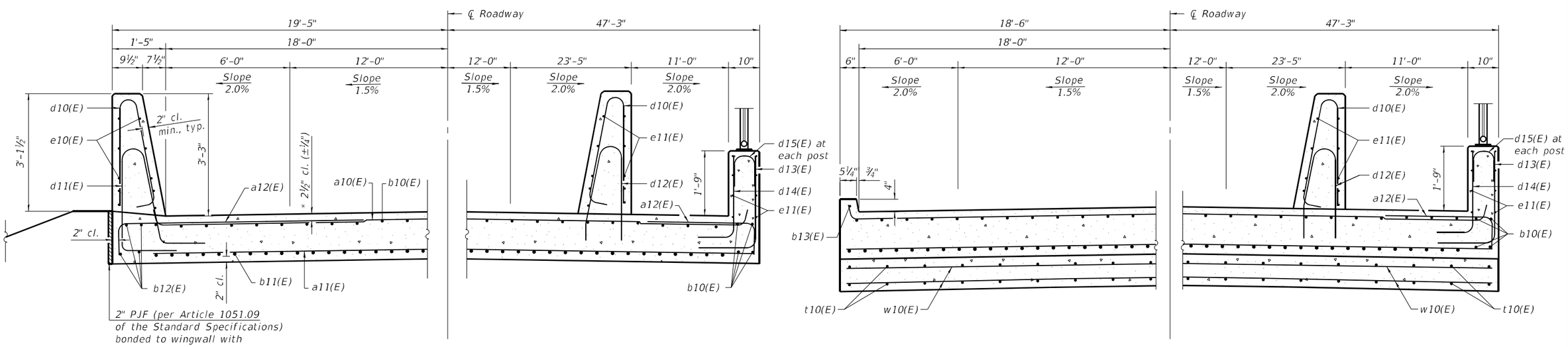

NEAR ABUTMENT

* Prior to grinding

CROSS SECTION

(Looking East)

AT APPROACH FOOTING

(Sheet 1 of 2)

MODEL: Default
FILE NAME: P:\5XXX50XX-51XX\5000 - IDOT PTB 200-038 D9 IL 13 Crab Orchard Bridges\24-Structures\CAD-MS\100-0106-78373-015-BridgeApproachSlab1.dgn
3/11/2025 5:57:22 AM

CDI CIVIL DESIGN, INC. WBE / DBE EFFINGHAM, IL LICENSE #184.003222

USER NAME =	DESIGNED - JAG	REVISED -	
	CHECKED - JGS	REVISED -	
PLOT SCALE =	DRAWN - JAG	REVISED -	
PLOT DATE =	CHECKED - JGS	REVISED -	

STATE OF ILLINOIS
DEPARTMENT OF TRANSPORTATION

BRIDGE APPROACH SLAB DETAILS
STRUCTURE NO. 100-0106

SHEET 15 OF 29 SHEETS

F.A.P. RTE.	SECTION	COUNTY	TOTAL SHEETS	SHEET NO.
331	(1-4)R-5,RS-2,B-1,B-2,B-3,B-4	WILLIAMSON	519	225
		CONTRACT NO. 78373		
		ILLINOIS FED. AID PROJECT		

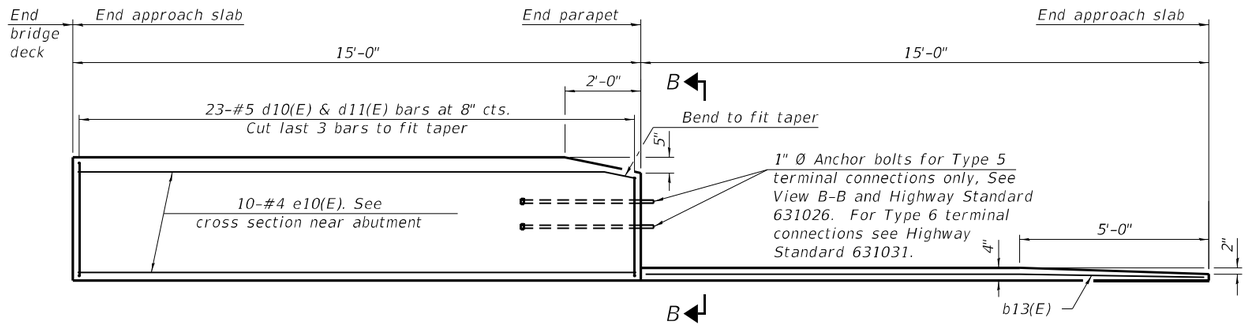

INSIDE ELEVATION OF PARAPET AND CURB

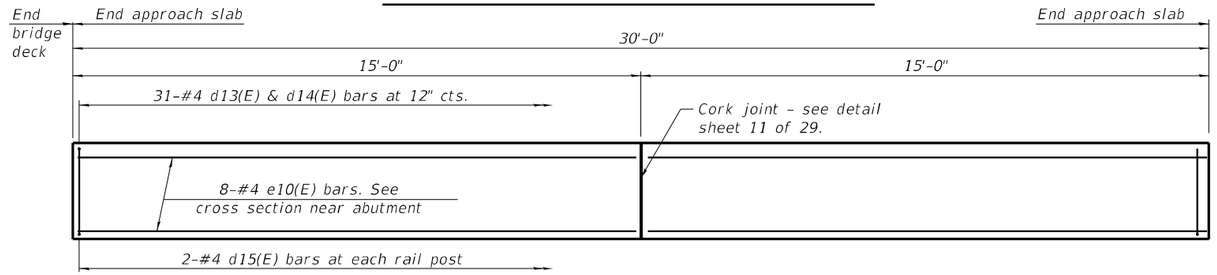

INSIDE ELEVATION OF SOUTH PARAPET

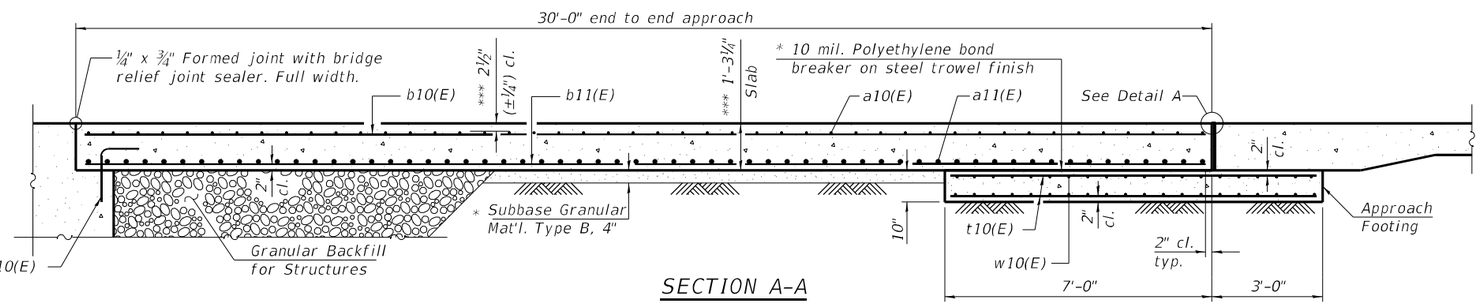

SECTION A-A

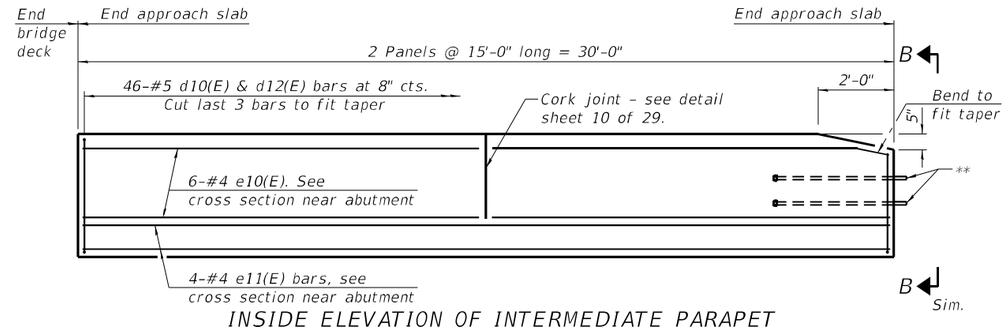

INSIDE ELEVATION OF INTERMEDIATE PARAPET

** 1" Ø Anchor bolts for Type 5 terminal connections only, See View B-B and Highway Standard 631026. For Type 6 terminal connections see Highway Standard 631031.

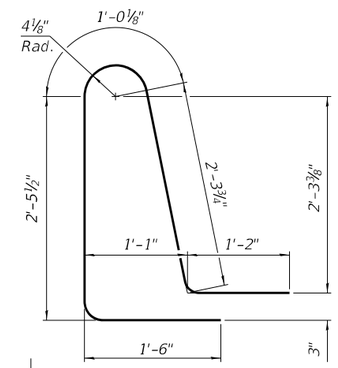

BAR d11(E)

Notes:

Parapet and barrier concrete shall be paid for as Concrete Superstructure.

Approach slab shall be paid for as Concrete Superstructure (Approach Slab).

Approach footing concrete shall be paid for as Concrete Structures.

The approach footing maximum applied service bearing pressure (Qmax) = 2.0 ksf.

Cost of excavation for approach footing included with Concrete Structures.

For Granular Backfill for Structures and drainage treatment details, see sheet 2 of 29.

TWO APPROACHES BILL OF MATERIAL

Bar	No.	Size	Length	Shape
a10(E)	180	#5	35'-0"	
a11(E)	240	#8	35'-8"	
a12(E)	138	#5	7'-4"	
b10(E)	192	#5	29'-8"	
b11(E)	308	#9	29'-8"	
b12(E)	8	#5	14'-8"	
b13(E)	2	#4	14'-8"	
d10(E)	138	#5	6'-5"	
d11(E)	46	#5	8'-6"	
d12(E)	92	#5	5'-2"	
d13(E)	62	#4	4'-1"	
d14(E)	62	#4	2'-11"	
d15(E)	20	#4	2'-0"	
e10(E)	76	#4	14'-8"	
e11(E)	8	#4	29'-8"	
t10(E)	264	#4	9'-8"	
w10(E)	160	#5	35'-0"	
Concrete Superstructure			Cu. Yd.	15.0
Concrete Superstructure (Approach Slab)			Cu. Yd.	187.1
Concrete Structures			Cu. Yd.	40.6
Reinforcement Bars, Epoxy Coated			Pound	78,180

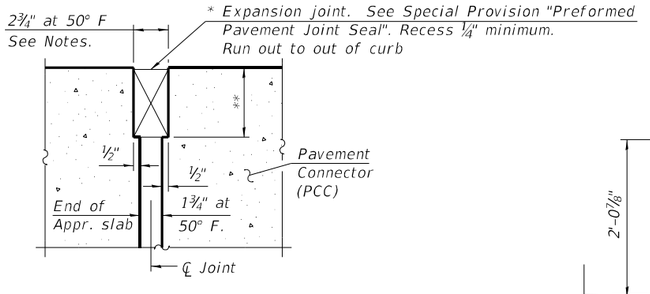

DETAIL A

* Cost included with Concrete Superstructure (Approach Slab).

** Per manufacturer recommendations

*** Prior to grinding

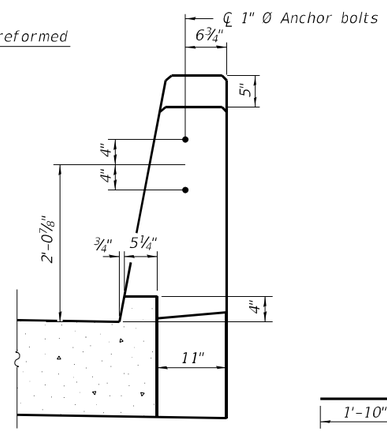

VIEW B-B

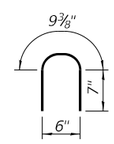

BAR d15(E)

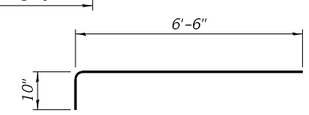

BAR a12(E)

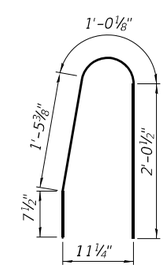

BAR d12(E)

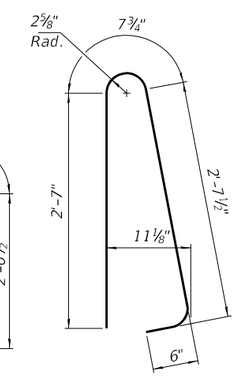

BAR d10(E)

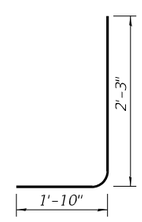

BAR d13(E)

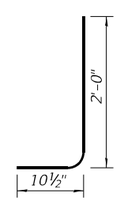

BAR d14(E)

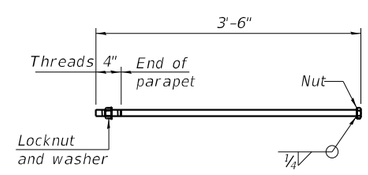

*1" Ø ANCHOR BOLT

(Anchor bolt assemblies shall be galvanized according to Article 1006.09 of the Standard Specifications)

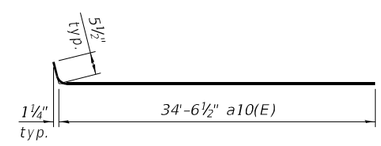

BAR a10(E)

(Sheet 2 of 2)

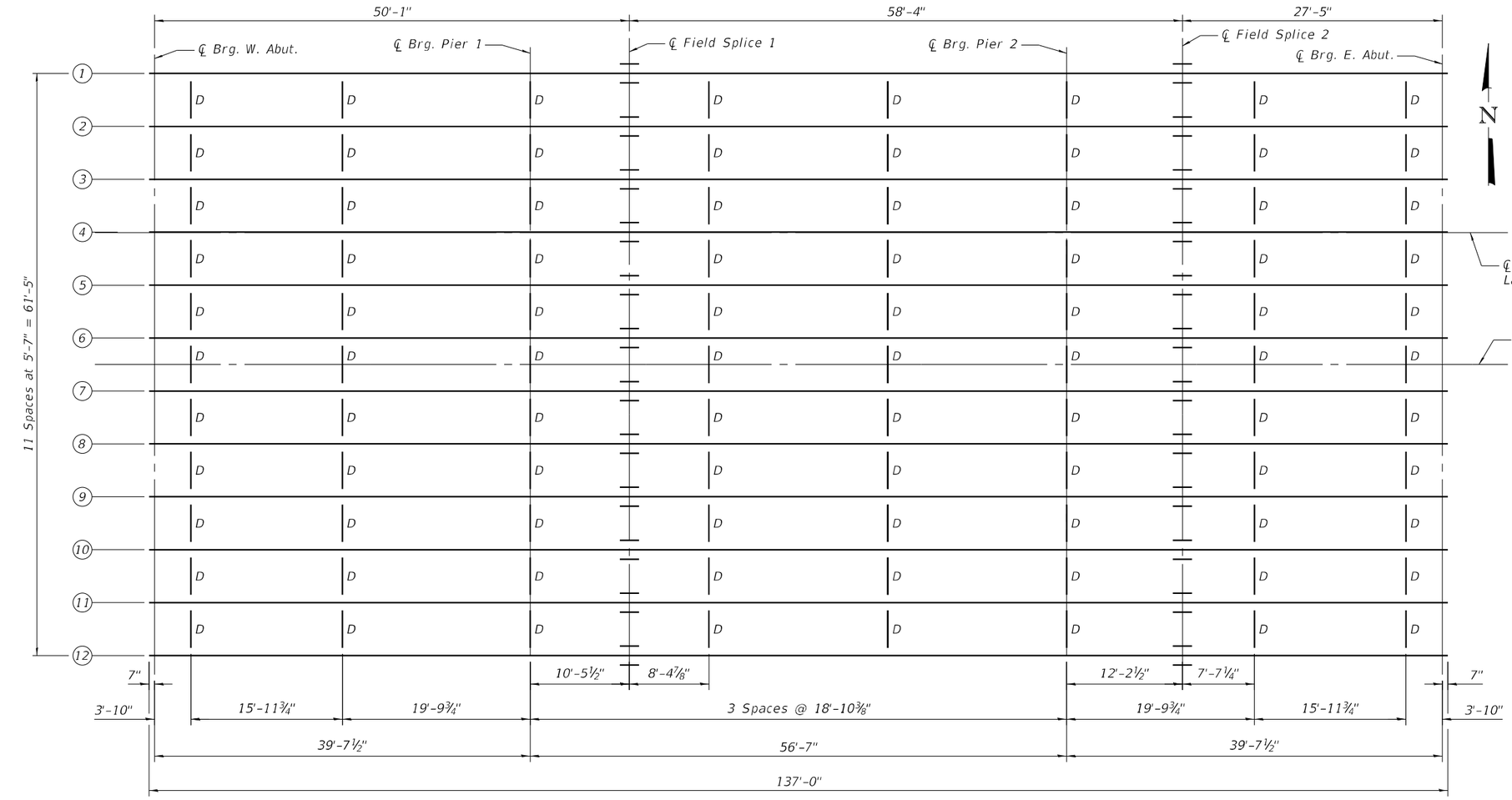

FRAMING PLAN

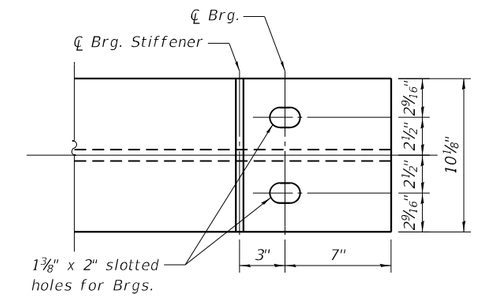

END OF BEAM DETAIL

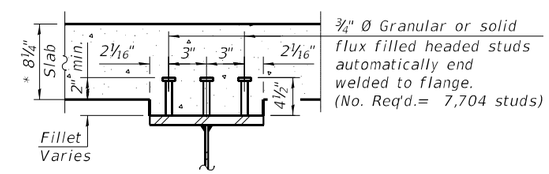

SECTION A-A

* Prior to grinding

Notes:

All splice plates and bearing stiffeners shall be ASTM M270, Grade 50.

Load carrying components designated "CVN" shall conform to the Charpy-V-Notch Impact Energy Requirement, Zone 2.

All diaphragms shall be installed as steel is erected and secured with erection pins and bolts except as otherwise noted. Individual diaphragms at supports may be temporarily disconnected to install bearing anchor rods.

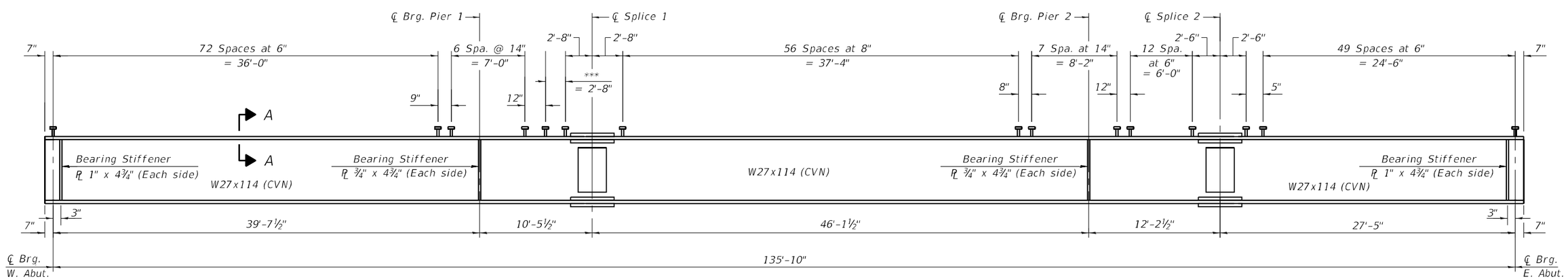

BEAM ELEVATION

*** 4 Spaces @ 8"

CIVIL DESIGN, INC. WBE / DBE EFFINGHAM, IL LICENSE #184.003222	USER NAME =	DESIGNED – JAG	REVISED –	STATE OF ILLINOIS DEPARTMENT OF TRANSPORTATION	STRUCTURAL STEEL STRUCTURE NO. 100-0106	F.A.P. RTE.	SECTION	COUNTY	TOTAL SHEETS / SHEET NO.
		CHECKED – JGS	REVISED –			331	(1-4)R-5,RS-2,B-1,B-2,B-3,B-4	WILLIAMSON	519 / 227
	PLOT SCALE =	DRAWN – JAG	REVISED –					CONTRACT NO. 78373	
	PLOT DATE =	CHECKED – JGS	REVISED –		SHEET 17 OF 29 SHEETS		ILLINOIS	FED. AID PROJECT	

MODEL: Default
FILE NAME: P:\5XXX\50XX-51XX\5000 - IDOT PTB 200-038 D9 IL 13 Crab Orchard Bridges\24-Structures\CAD-MS\100-0106-78373-017-Structural Steel.dgn
3/11/2025 5:58:16 AM

TOP OF BEAM ELEVATIONS
(FOR FABRICATION ONLY)

Location	Girder 1	Girder 2	Girder 3	Girder 4	Girder 5	Girder 6	Girder 7	Girder 8	Girder 9	Girder 10	Girder 11	Girder 12
℄ Brg. W. Abut.	414.06	414.16	414.25	414.33	414.25	414.16	414.06	413.95	413.83	413.72	413.61	413.50
℄ Brg. Pier 1	414.07	414.18	414.26	414.35	414.26	414.18	414.07	413.96	413.85	413.74	413.63	413.52
℄ Splice 1	414.07	414.18	414.26	414.35	414.26	414.18	414.07	413.96	413.85	413.74	413.63	413.51
℄ Brg. Pier 2	414.06	414.17	414.25	414.34	414.26	414.17	414.06	413.95	413.84	413.73	413.62	413.51
℄ Splice 2	414.05	414.16	414.25	414.33	414.25	414.16	414.06	413.94	413.83	413.72	413.61	413.50
℄ Brg. E. Abut.	414.04	414.14	414.23	414.31	414.23	414.14	414.04	413.93	413.81	413.70	413.59	413.48

Notes:
Alternate channels of equal depth and larger weight are permitted to facilitate material acquisition. Alternate channels, if utilized, shall be provided at no additional cost to the Department.

Two hardened washers required for each set of oversized holes.

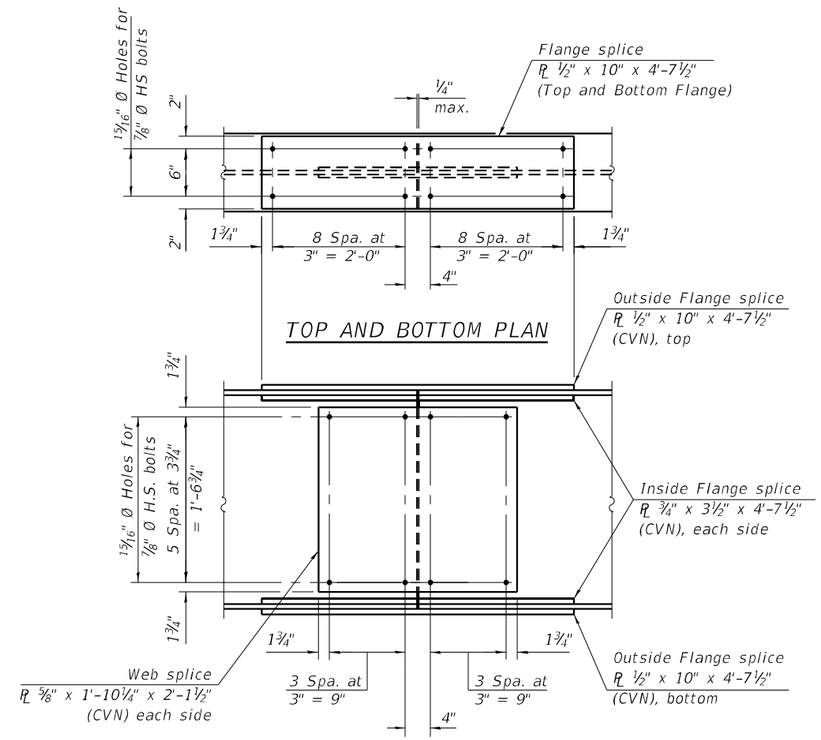

ELEVATION

SPLICE DETAIL
(24 Required)

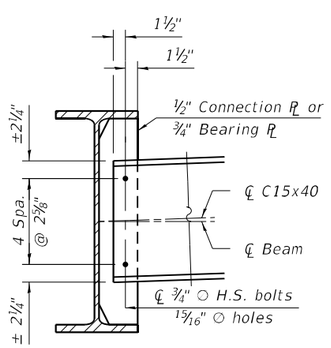

DIAPHRAGM D
(88 Required)

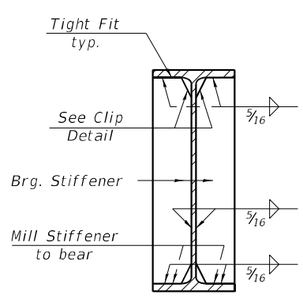

BEARING STIFFENER DETAIL

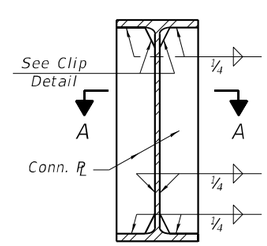

CONNECTION PLATE DETAIL

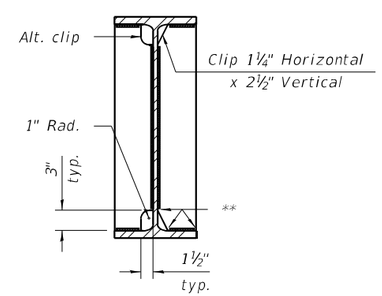

WELD LIMITS AND CLIP DETAILS

** Stop welds 1/4" (±1/8") from edges as shown. Typical.

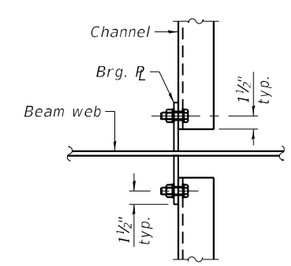

SECTION A-A

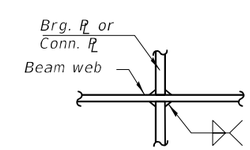

WEB WELD DETAIL

INTERIOR GIRDER MOMENT TABLE				
		0.4 Sp. 1 or 0.6 Sp. 2	Pier 1 & Pier 2	0.5 Sp. 2
I_s	(in^4)	4,080	4,080	4,080
$I_c(n)$	(in^4)	12,592	12,592	12,592
$I_c(3n)$	(in^4)	9,190	9,190	9,190
$I_c(cr)$	(in^4)	——	5,850	——
S_s	(in^3)	299	299	299
$S_c(n)$	(in^3)	468	——	468
$S_c(3n)$	(in^3)	418	——	418
$S_c(cr)$	(in^3)	——	297	——
S_x	(in^3)	——	——	——
DC1	(k/')	0.762	0.762	0.762
M_{DC1}	('k)	67	177	116
DC2	(k/')	0.175	0.175	0.175
M_{DC2}	('k)	67	43	27
DW	(k/')	0.269	0.269	0.269
M_{DW}	('k)	24	66	42
LLDF		0.529	0.503	0.483
M_{LL+IM}	('k)	317	303	351
f_l (Strength I)	(ksi)	——	——	——
$M_u + {}^1/_3 f_l S_x$	('k)	758	904	856
$\phi_f M_n$	('k)	2,480	1,782	2,480
f_s DC1	(ksi)	2.69	7.10	4.66
f_s DC2	(ksi)	1.93	1.73	0.78
f_s DW	(ksi)	0.69	2.66	1.21
f_s (LL+IM)	(ksi)	8.13	12.23	9.00
f_l (Service II)	(ksi)	0.0	0.0	0.0
$f_s + {}^{f_l}/_2$ (Service II)	(ksi)	15.88	27.40	18.34
Service II Resistance	(ksi)	47.5	47.5	47.5
$f_s + {}^{f_l}/_3$ (Strength I)	(ksi)	21.0	36.4	24.4
$\phi_f F_n$	(ksi)	——	——	——
V_f	(k)	30.2	36.3	28.2

GIRDER REACTION TABLE			
		Abut.	Pier
LLDF		0.640	0.640
OCF		–	–
R_{DC1}	(k)	10.7	39.7
R_{DC2}	(k)	2.4	9.5
R_{DW}	(k)	3.7	14.6
R_{LL}	(k)	40.8	66.6
R_{Im}	(k)	11.1	14.3
R_{Total} (Strength I)(Impact)	(k)	112.8	225.0
R_{Total} (Strength I)(No Impact)	(k)	93.3	200.0

I_s, S_s : Non-composite moment of inertia and section modulus of the steel section used for computing f_s(Total-Strength I, and Service II) due to non-composite dead loads ($in.^4$ and $in.^3$).

$I_c(n)$, $S_c(n)$: Composite moment of inertia and section modulus of the steel and deck based upon the modular ratio, "n", used for computing f_s(Total-Strength I, and Service II) in uncracked sections due to short-term composite live loads ($in.^4$ and $in.^3$).

$I_c(3n)$, $S_c(3n)$: Composite moment of inertia and section modulus of the steel and deck based upon 3 times the modular ratio, "3n", used for computing f_s(Total-Strength I, and Service II) in uncracked sections, due to long-term composite (superimposed) dead loads ($in.^4$ and $in.^3$).

$I_c(cr)$, $S_c(cr)$: Composite moment of inertia and section modulus of the steel and longitudinal deck reinforcement, used for computing f_s (Total-Strength I and Service II) in cracked sections, due to both short-term composite live loads and long-term composite (superimposed) dead loads ($in.^4$ and $in.^3$).

S_x : Section modulus about the major axis of a section to the controlling flange, tension or compression, taken as yield moment with respect to the controlling flange over the yield strength of the controlling flange ($in.^3$).

DC1: Un-factored non-composite dead load (kips/ft.).

M_{DC1} : Un-factored moment due to non-composite dead load (kip-ft.).

DC2: Un-factored long-term composite (superimposed excluding future wearing surface) dead load (kips/ft.).

M_{DC2} : Un-factored moment due to long-term composite (superimposed excluding future wearing surface only) dead load (kip-ft.).

DW: Un-factored long-term composite (superimposed future wearing surface only) dead load (kips/ft.).

M_{DW} : Un-factored moment due to long-term composite (superimposed future wearing surface only) dead load (kip-ft.).

LLDF: Live Load Distribution Factor for moment and shear computed according to Article 4.6.2.2 and further IDOT provisions.

M_{LL+IM}: Un-factored live load moment plus dynamic load allowance (impact) (kip-ft.).

M_u : Strength I load combination of factored design moments (kip-ft.).
$1.25\ (M_{DC1} + M_{DC2}) + 1.5\ M_{DW} + 1.75\ M_{LL+IM}$

f_l : Factored calculated flange lateral bending stress as calculated using Article 6.10.1.6 and as further simplified by IDOT provisions (ksi).

$\phi_f M_n$: Factored nominal flexural resistance of the section determined as specified in Article 6.10.7.1 or A6 as applicable (kip-ft.).

f_s DC1: Un-factored stress at edge of flange for controlling steel flange due to vertical non-composite dead loads as calculated below (ksi).
M_{DC1} / S_s

f_s DC2: Un-factored stress at edge of flange for controlling steel flange due to vertical composite dead loads as calculated below (ksi).
$M_{DC2} / S_c(3n)$ or $M_{DC2} / S_c(cr)$ as applicable.

f_s DW: Un-factored stress at edge of flange for controlling steel flange due to vertical composite future wearing surface loads as calculated below (ksi).
$M_{DW} / S_c(3n)$ or $M_{DW} / S_c(cr)$ as applicable.

f_s (LL + IM): Un-factored stress at edge of flange for controlling steel flange due to vertical composite live load plus impact loads as calculated below (ksi).
$M_{LL+IM} / S_c(n)$ or $M_{LL+IM} / S_c(cr)$ as applicable.

$f_s + f_l/2$ (Service II): Sum of stresses as computed below (ksi).
f_s DC1 + f_s DC2 + f_s DW + 1.3 f_s (LL + IM) + $f_l/2$

Service II Resistance: Composite ($0.95R_hF_{yf}$) or noncomposite ($0.80R_hF_{yf}$) stress capacity according to Article 6.10.4.2 (ksi).

$f_s + f_l/3$ (Strength I): Sum of stresses as computed below on non-compact sections (ksi).
1.25 (f_s DC1 + f_s DC2) + 1.5 f_s DW + 1.75 f_s (LL + IM) + $f_l/3$

$\phi_f F_n$: Factored nominal flexural resistance of the section as specified in Article 6.10.7.2 or 6.10.8 as applicable (ksi).

V_f : Maximum factored shear range in span computed according to Article 6.10.10.

OCF: Obtuse Correction Factor according to Article 4.6.2.2.3c or as further simplified by IDOT provisions.

R_{DC1} : Un-factored reaction due to non-composite dead load (kip).

R_{DC2} : Un-factored reaction due to long-term composite (superimposed excluding future wearing surface) dead load (kip).

R_{DW} : Un-factored reaction due to long-term composite (superimposed future wearing surface only) dead load (kip).

R_{LL} : Un-factored live load reaction (kip).

R_{IM} : Un-factored dynamic load allowance (impact) (kip).

R_{Total} (Strength I)(Impact): Strength I load combination of factored design reactions (kip).
$1.25\ (R_{DC1} + R_{DC2}) + 1.5R_{DW} + 1.75\ (R_{LL} + R_{IM})$

R_{Total} (Strength I)(No Impact): Strength I load combination of factored design reactions, not including dynamic load allowance (Impact) (kip).
$1.25\ (R_{DC1} + R_{DC2}) + 1.5R_{DW} + 1.75\ (R_{LL})$

Note:
M_{LL} and R_{LL} include the effects of centrifugal force and superelevation.

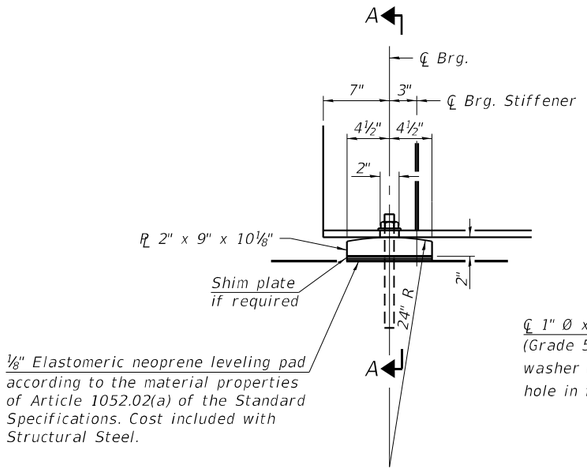

ELEVATION AT ABUTMENT

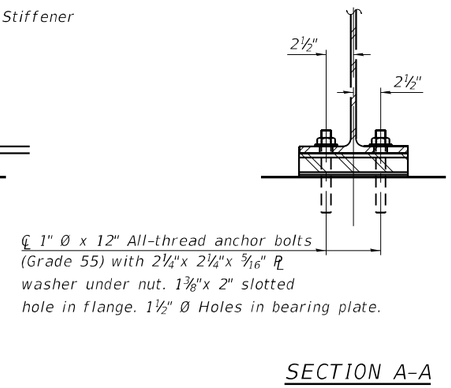

SECTION A-A

FIXED BEARING AT ABUTMENT

(24 Required)

Notes:

Anchor bolts shall be according to Article 521.06 of the Standard Specifications.

Beams shall be braced for stability during erection and remain braced until deck is poured and cured.

Anchor bolts at all supports shall be installed as each member is erected unless an equivalent temporary means of lateral restraint is used.

Anchor bolts shall be ASTM F1554 all-thread (or an Engineer-approved alternate material) of the grade(s) and diameter(s) specified. The corresponding specified grade of AASHTO M314 anchor bolts may be used in lieu of ASTM F1554.

Two ⅛ in. adjusting shims shall be provided for each bearing in addition to all other plates or shims and placed as shown on bearing details.

The anchor bolts sizes and grades shown at the pier constitute a calculated seismic structural fuse. Substitution of higher diameter and/or grade anchor bolts will not be allowed.

The structural steal bearing and fill plates shall conform to the requirement of AASHTO M270 Grade 50.

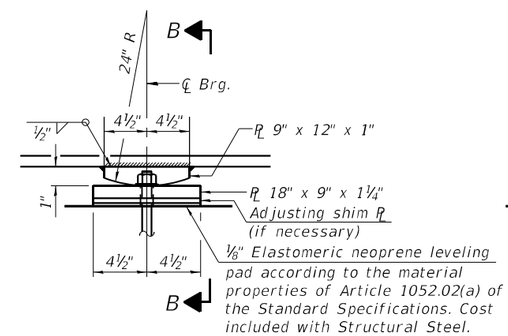

ELEVATION AT PIER

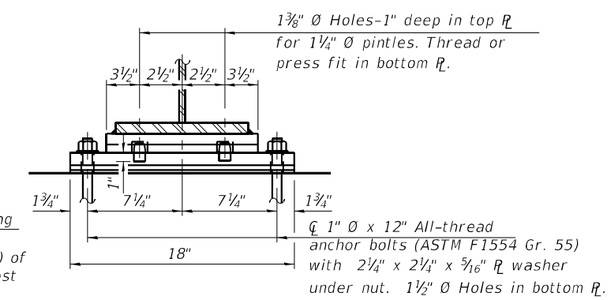

SECTION B-B

FIXED BEARING AT PIER

(24 Required)

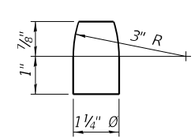

PINTLE

BILL OF MATERIAL

Item	Unit	Total
Anchor Bolts, 1"	Each	96

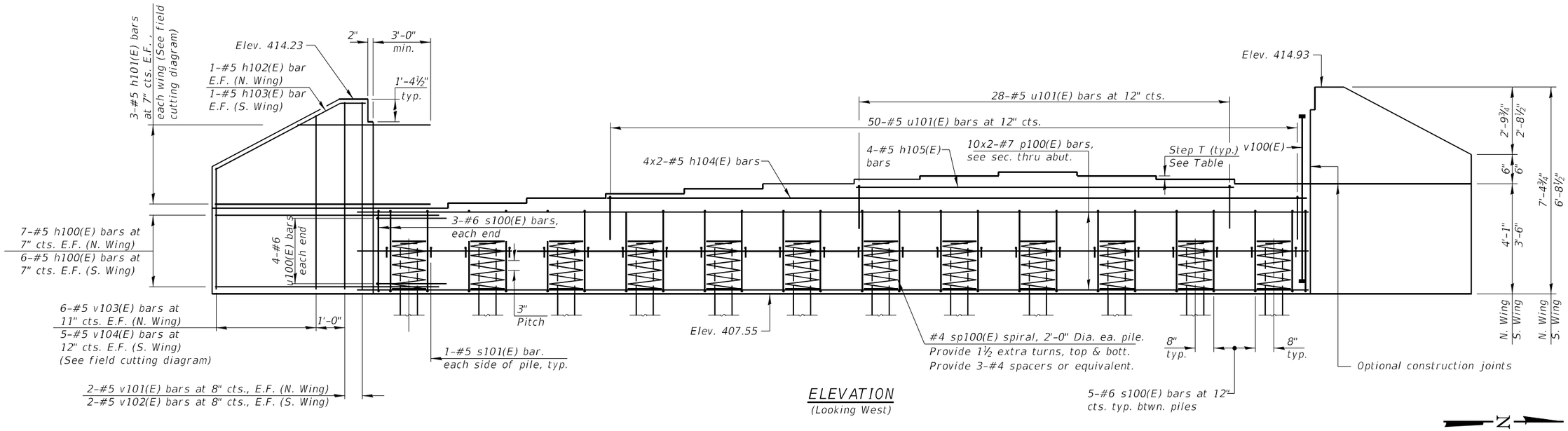

ELEVATION
(Looking West)

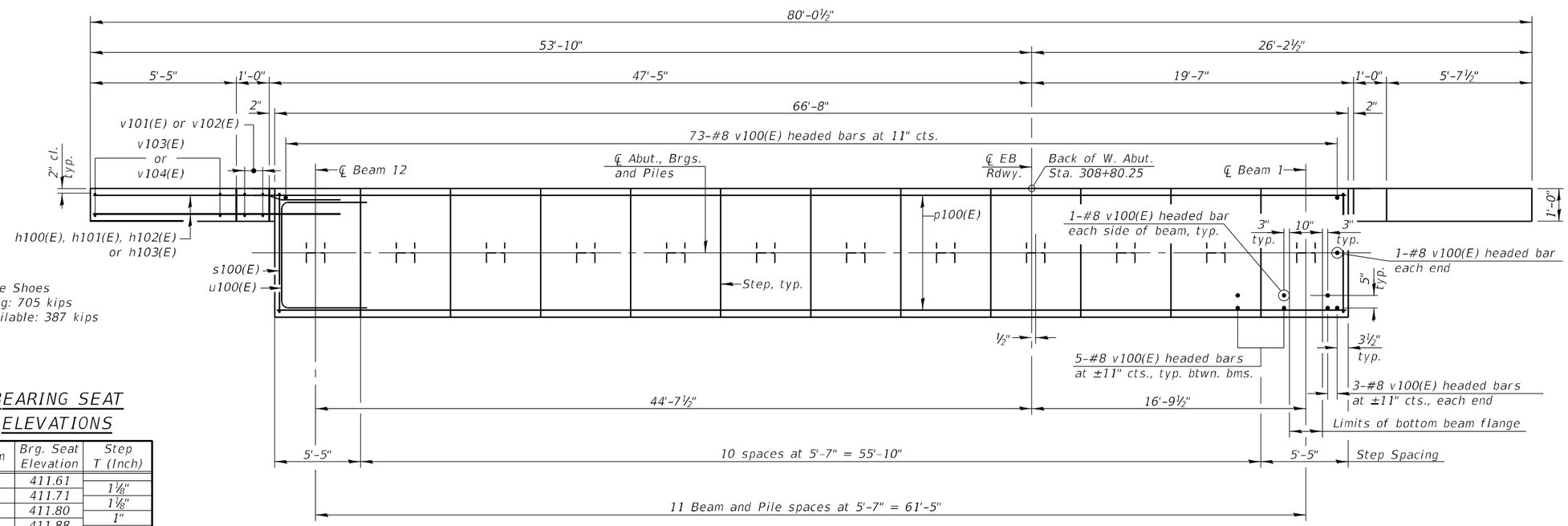

PLAN

PILE DATA

Type: HP 14x89 with Pile Shoes
Nominal Required Bearing: 705 kips
Factored Resistance Available: 387 kips
Est. Length: 65 feet
No. Production Piles: 11
No. Test Piles: 1

BEARING SEAT ELEVATIONS

Beam	Brg. Seat Elevation	Step T (Inch)
1	411.61	
		1⅛"
2	411.71	
		1⅛"
3	411.80	
		1"
4	411.88	
		1"
5	411.80	
		1⅛"
6	411.71	
		1⅛"
7	411.61	
		1⅜"
8	411.50	
		1⅜"
9	411.38	
		1⅜"
10	411.27	
		1¼"
11	411.16	
		1⅜"
12	411.05	

Notes:
Pour steps monolithically with cap.
For details of piles see sheet 27 of 29.
Bars indicated thus 10x2 - #7 etc. indicates 10 lines of bars with 2 lengths per line.

MINIMUM BAR LAP

#4 Bar = 2'-11"
#7 Bar = 5'-0"

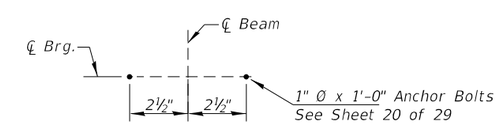

ANCHOR BOLT LAYOUT

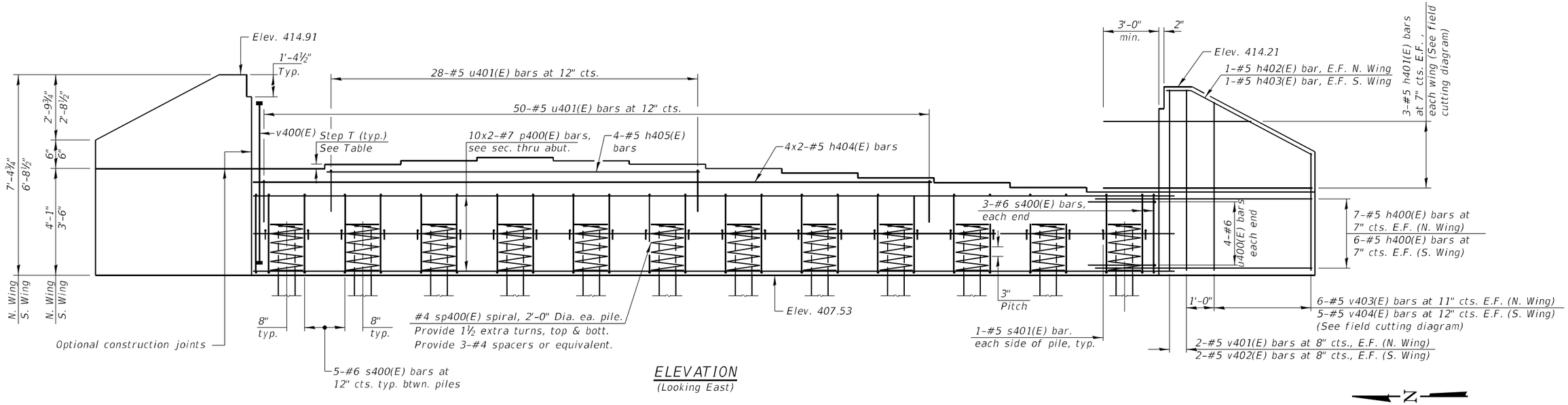

ELEVATION
(Looking East)

PILE DATA

Type: HP 14x89 with Pile Shoes
Nominal Required Bearing: 705 kips
Factored Resistance Available: 387 kips
Est. Length: 61 feet
No. Production Piles: 11
No. Test Piles: 1

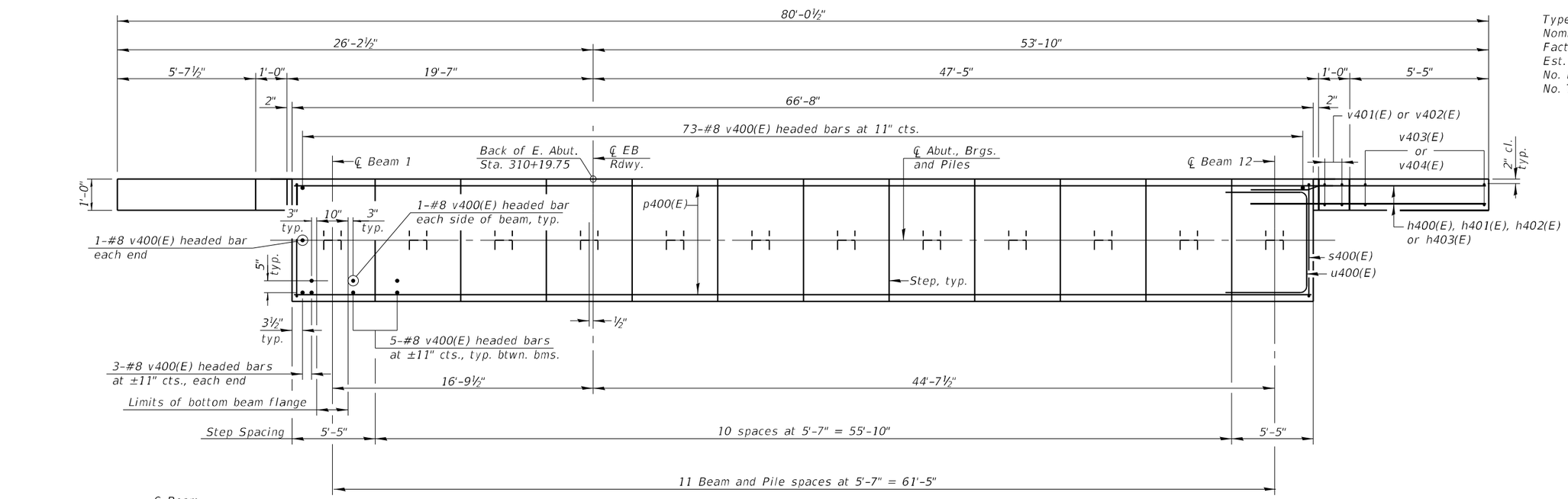

PLAN

BEARING SEAT ELEVATIONS

Beam	Brg. Seat Elevation	Step T (Inch)
1	411.59	
2	411.69	1⅛"
3	411.78	1⅛"
4	411.86	1"
5	411.78	1"
6	411.69	1⅛"
7	411.59	1⅛"
8	411.48	1⅜"
9	411.36	1⅜"
10	411.25	1⅜"
11	411.14	1¼"
12	411.03	1⅜"

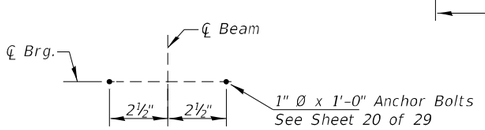

ANCHOR BOLT LAYOUT

MINIMUM BAR LAP

#4 Bar = 2'-11"
#7 Bar = 5'-0"

Notes:
Pour steps monolithically with cap.
For details of piles see sheet 27 of 29.
Bars indicated thus 10x2 - #7 etc. indicates 10 lines of bars with 2 lengths per line.

WEST ABUTMENT BILL OF MATERIAL

Bar	No.	Size	Length	Shape
h100(E)	26	#5	9'-8"	
h101(E)	6	#5	17'-5"	
h102(E)	2	#5	6'-11"	
h103(E)	2	#5	6'-8"	
h104(E)	8	#5	26'-3"	
h105(E)	4	#5	27'-7"	
p100(E)	20	#7	35'-9"	
s100(E)	61	#6	14'-4"	
s101(E)	24	#5	4'-4"	
* sp100(E)	12	#4	2'-0"	
u100(E)	8	#6	11'-10"	
u101(E)	78	#5	7'-4"	
v100(E)	160	#8	5'-3"	
v101(E)	4	#5	7'-0"	
v102(E)	4	#5	6'-4"	
v103(E)	6	#5	11'-0"	
v104(E)	5	#5	9'-8"	
Structure Excavation			Cu. Yd.	191
Concrete Structures			Cu. Yd.	39.2
Reinforcement Bars, Epoxy Coated			Pound	7390
Furnishing Steel Piles HP14X89			Foot	715
Driving Piles			Foot	715
Test Pile Steel HP14X89			Each	1
Pile Shoes			Each	12
Granular Backfill for Structures			Cu. Yd.	118
Geocomposite Wall Drain			Sq. Yd.	56
Pipe Underdrains for Structures			Foot	117

* Length is height of spiral.

EAST ABUTMENT BILL OF MATERIAL

Bar	No.	Size	Length	Shape
h400(E)	26	#5	9'-8"	
h401(E)	6	#5	17'-5"	
h402(E)	2	#5	6'-11"	
h403(E)	2	#5	6'-8"	
h404(E)	8	#5	26'-3"	
h405(E)	4	#5	27'-7"	
p400(E)	20	#7	35'-9"	
s400(E)	61	#6	14'-4"	
s401(E)	24	#5	4'-4"	
* sp400(E)	12	#4	2'-0"	
u400(E)	8	#6	11'-10"	
u401(E)	78	#5	7'-4"	
v400(E)	160	#8	5'-3'	
v401(E)	4	#5	7'-0"	
v402(E)	4	#5	6'-4"	
v403(E)	6	#5	11'-0"	
v404(E)	5	#5	9'-8"	
Structure Excavation			Cu. Yd.	191
Concrete Structures			Cu. Yd.	39.2
Reinforcement Bars, Epoxy Coated			Pound	7390
Furnishing Steel Piles HP14X89			Foot	671
Driving Piles			Foot	671
Test Pile Steel HP14X89			Each	1
Pile Shoes			Each	12
Granular Backfill for Structures			Cu. Yd.	118
Geocomposite Wall Drain			Sq. Yd.	56
Pipe Underdrains for Structures			Foot	117

* Length is height of spiral.

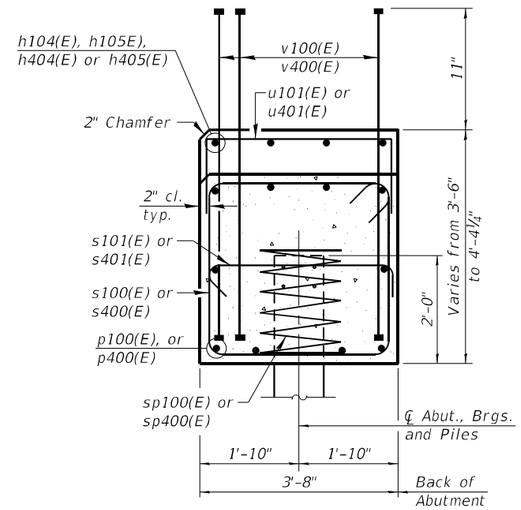

SEC. THRU ABUT.

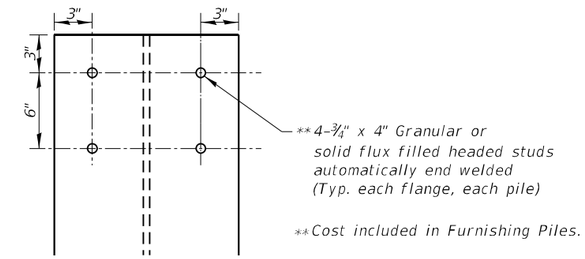

DETAIL A
Pile Studs

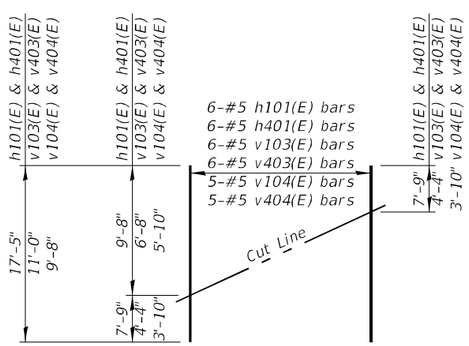

FIELD CUTTING DIAGRAM

Order h101(E), h401(E), v103(E), v104(E), v403(E) and v404(E) full length. Cut as shown and use remainder of bars in opposite face.

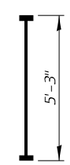

BARS v100(E) & V400(E)
(Headed 640-#8 Bar Terminators)

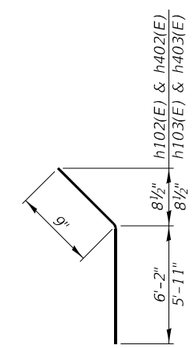

BARS h102(E) & h103(E)
BARS h402(E) & h403(E)

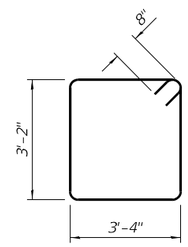

BARS s100(E) & s400(E)

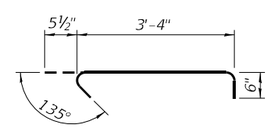

BARS s101(E) & s401(E)

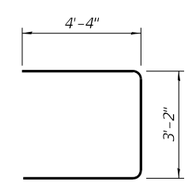

BARS u100(E) & u400(E)

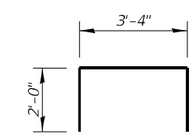

BARS u101(E) & u401(E)

Note: Bar terminators paid for separately.
See Total Bill of Material

Notes:
Pour steps monolithically with cap.
See sheet 26 of 29 for additional pier details and Bill of Material.
Space reinforcement in cap to miss anchor bolts.
For details of piles, see sheet 27 of 29.
Bars indicated thus 23 x 2 - #5 etc. indicates 23 lines of bars with 2 lengths per line.

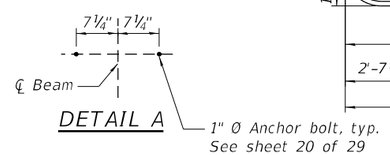

DETAIL A

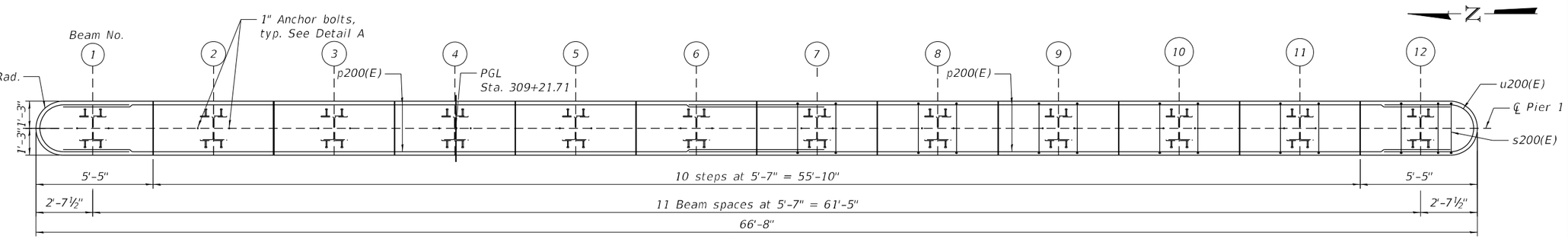

TOP PLAN

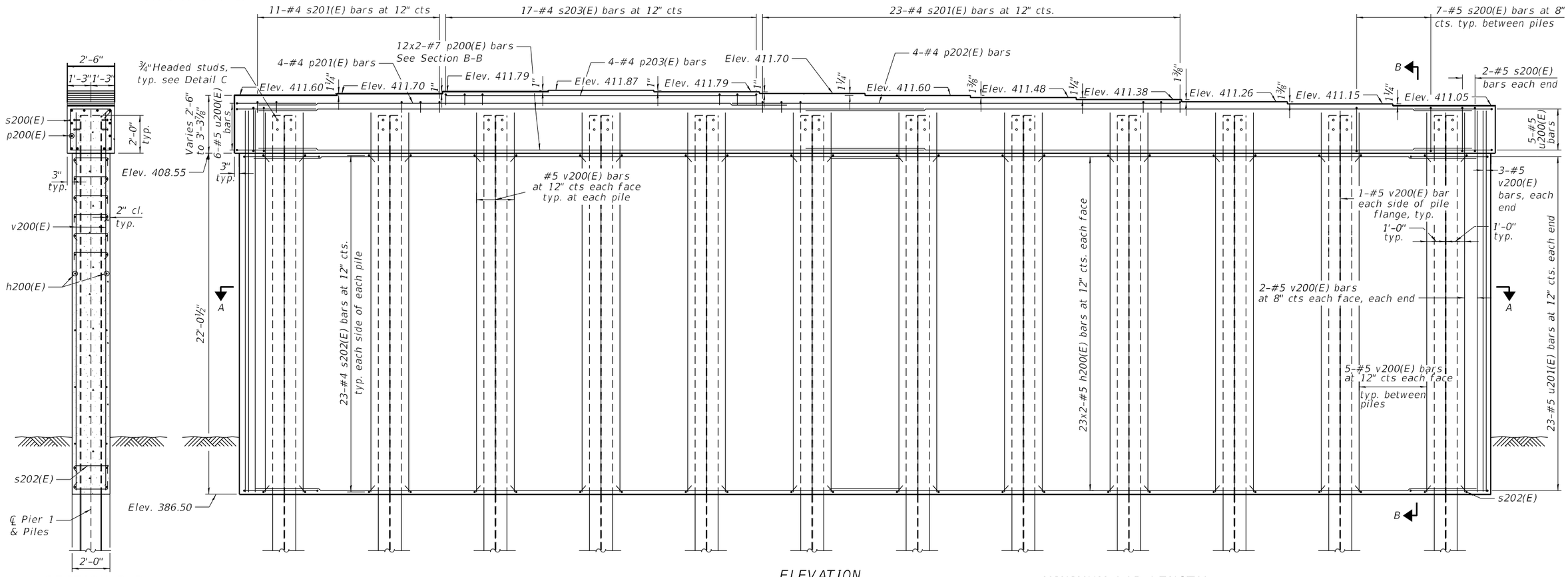

SECTION B-B

ELEVATION

MINIMUM LAP LENGTH

#4 bar = 2'-11"
#5 bar = 3'-7"
#7 bar = 6'-3"

PILE DATA

Type: Steel HP14x89 with pile shoes
Nominal Required Bearing: 687 kips
Factored Resistance Available: 362 kips
Est. Length: 66'
No. Req'd: 11
Test Pile: 1

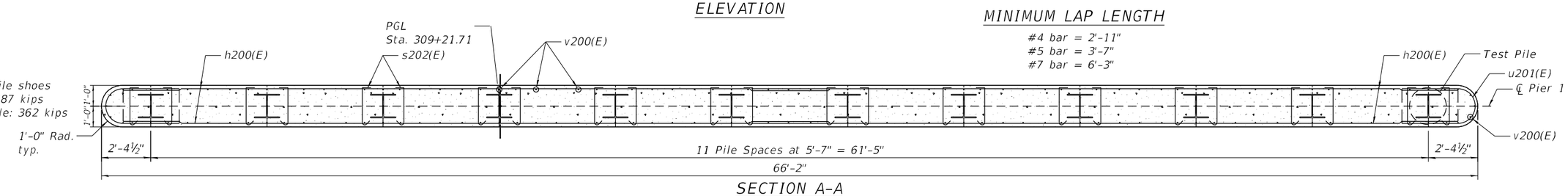

SECTION A-A

Michael Baker INTERNATIONAL
200 W Adams Street
Suite 1800
Chicago, IL 60606
PH: 312.707.8770
FAX: 312.707.8804

USER NAME =	DESIGNED - AMR	REVISED -
	CHECKED - MLK	REVISED -
PLOT SCALE =	DRAWN - FS	REVISED -
PLOT DATE =	CHECKED - AMR	REVISED -

STATE OF ILLINOIS
DEPARTMENT OF TRANSPORTATION

PIER 1
STRUCTURE NO. 100-0106

SHEET 24 OF 29 SHEETS

F.A.P. RTE.	SECTION	COUNTY	TOTAL SHEETS	SHEET NO.
331	(1-4)R-5,RS-2,B-1,B-2,B-3,B-4	WILLIAMSON	519	234
		CONTRACT NO. 78373		
		ILLINOIS FED. AID PROJECT		

Notes:
Pour steps monolithically with cap.
See sheet 26 of 29 for additional pier details and Bill of Material.
Space reinforcement in cap to miss anchor bolts.
For details of piles, see sheet 27 of 29.
Bars indicated thus 23 x 2 - #5 etc. indicates 23 lines of bars with 2 lengths per line.

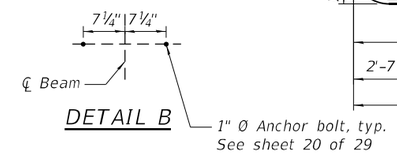

DETAIL B

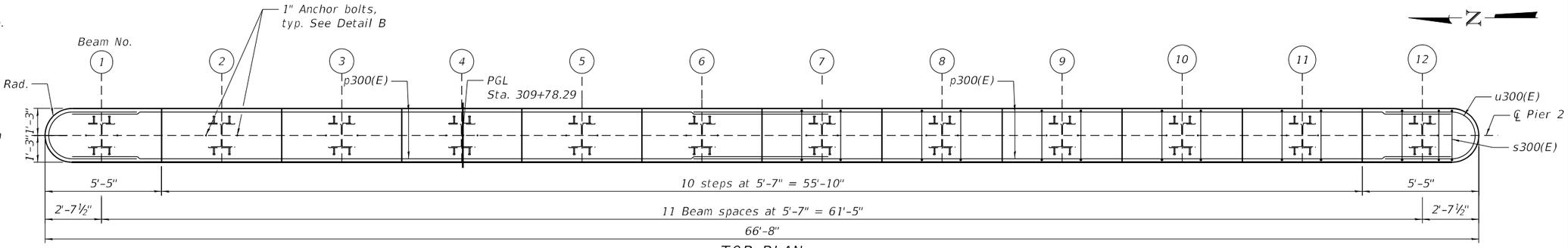

TOP PLAN

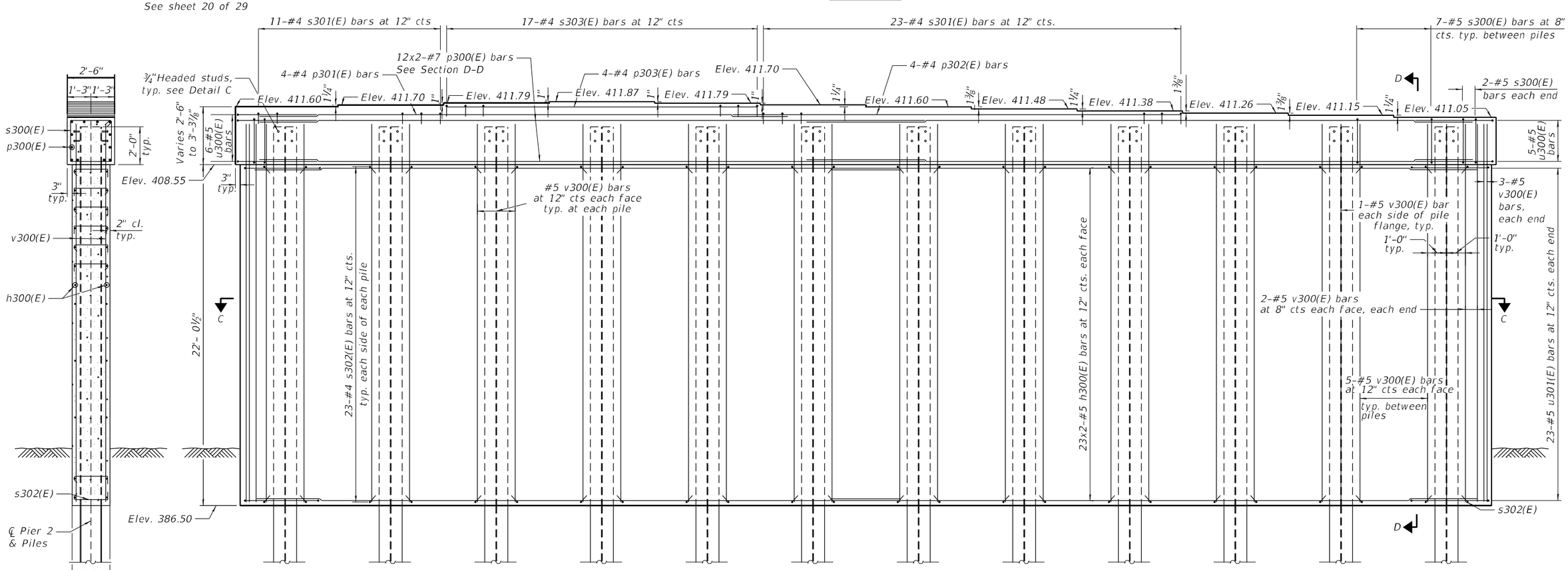

SECTION D-D

ELEVATION

MINIMUM LAP LENGTH

#4 bar = 2'-11"
#5 bar = 3'-7"
#7 bar = 6'-3"

PILE DATA

Type: Steel HP14x89 with pile shoes
Nominal Required Bearing: 705 kips
Factored Resistance Available: 370 kips
Est. Length: 62'
No. Req'd: 11
Test Pile: 1

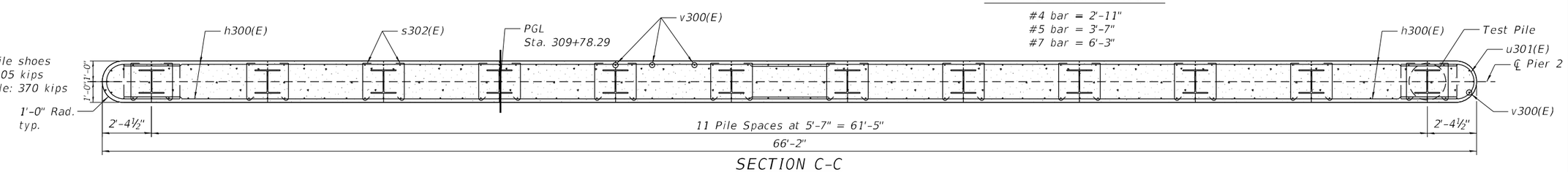

SECTION C-C

Michael Baker INTERNATIONAL
200 W Adams Street
Suite 1800
Chicago, IL 60606
PH: 312.707.8770
FAX: 312.707.8804

USER NAME =	DESIGNED - AMR	REVISED -
	CHECKED - MLK	REVISED -
PLOT SCALE =	DRAWN - FS	REVISED -
PLOT DATE =	CHECKED - AMR	REVISED -

STATE OF ILLINOIS
DEPARTMENT OF TRANSPORTATION

PIER 2
STRUCTURE NO. 100-0106

SHEET 25 OF 29 SHEETS

F.A.P. RTE.	SECTION	COUNTY	TOTAL SHEETS	SHEET NO.
331	(1-4)R-5,RS-2,B-1,B-2,B-3,B-4	WILLIAMSON	519	235
		CONTRACT NO. 78373		
	ILLINOIS	FED. AID PROJECT		

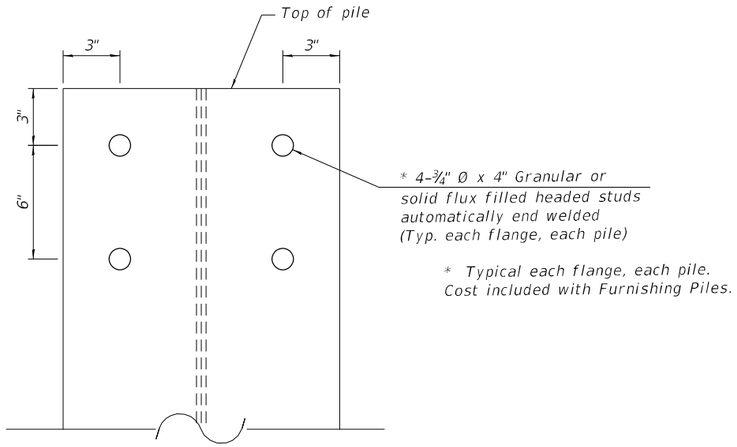

DETAIL C

PIER 1
BILL OF MATERIAL

Bar	No.	Size	Length	Shape
h200(E)	92	#5	34'-9"	
p200(E)	24	#7	35'-3"	
p201(E)	4	#4	28'-0"	
p202(E)	4	#4	23'-8"	
p203(E)	4	#4	16'-5"	
s200(E)	81	#5	9'-7"	
s201(E)	34	#4	3'-8"	
s202(E)	552	#4	2'-6"	
s203(E)	17	#4	4'-2"	
u200(E)	11	#5	9'-5"	
u201(E)	46	#5	10'-4"	
v200(E)	148	#5	24'-1"	
Cofferdam Excavation			Cu Yd	300
Cofferdam (Type 2) (Location - 1)			Each	1
Concrete Structures			Cu Yd	125.7
Seal Coat Concrete			Cu Yd	124
Reinforcement Bars, Epoxy Coated			Pound	11,430
Furnishing Steel Piles HP14X89			Foot	726
Driving Piles			Foot	726
Test Pile Steel HP14X89			Each	1
Pile Shoes			Each	12

PIER 2
BILL OF MATERIAL

Bar	No.	Size	Length	Shape
h300(E)	92	#5	34'-9"	
p300(E)	24	#7	35'-3"	
p301(E)	4	#4	28'-0"	
p302(E)	4	#4	23'-8"	
p303(E)	4	#4	16'-5"	
s300(E)	81	#5	9'-7"	
s301(E)	34	#4	3'-8"	
s302(E)	552	#4	2'-6"	
s303(E)	17	#4	4'-2"	
u300(E)	11	#5	9'-5"	
u301(E)	46	#5	10'-4"	
v300(E)	148	#5	24'-1"	
Cofferdam Excavation			Cu Yd	300
Cofferdam (Type 2) (Location - 2)			Each	1
Concrete Structures			Cu Yd	125.7
Seal Coat Concrete			Cu Yd	124
Reinforcement Bars, Epoxy Coated			Pound	11,430
Furnishing Steel Piles HP14X89			Foot	682
Driving Piles			Foot	682
Test Pile Steel HP14X89			Each	1
Pile Shoes			Each	12

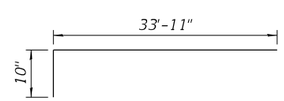

BAR h200(E)
BAR h300(E)

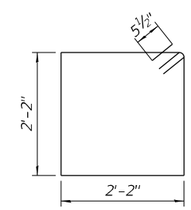

BAR s200(E)
BAR s300(E)

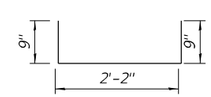

BAR s201(E)
BAR s301(E)

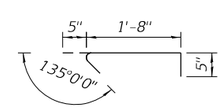

BAR s202(E)
BAR s302(E)

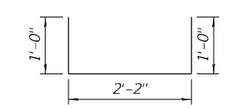

BAR s203(E)
BAR s303(E)

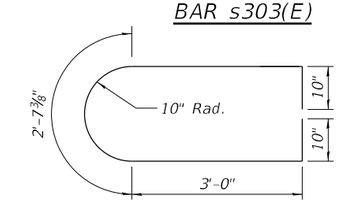

BAR u201(E)
BAR u301(E)

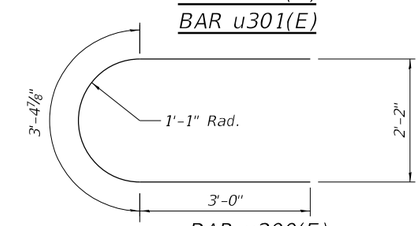

BAR u200(E)
BAR u300(E)

MODEL: Sheet
FILE NAME: pw:\\mb-us-pw.bentley.com:mb-us-pw-03\Documents\Chicago_IL\01_Projects\190812_PTB200-38_IL13_Crab_Orchard\5.0 CADD\CAD_Sheets\1000106-78383-031-pier.dgn

Michael Baker INTERNATIONAL
200 W Adams Street
Suite 1800
Chicago, IL 60606
PH: 312.707.8770
FAX: 312.707.8804

USER NAME =	DESIGNED - AMR	REVISED -	
	CHECKED - MLK	REVISED -	
PLOT SCALE =	DRAWN - FS	REVISED -	
PLOT DATE =	CHECKED - AMR	REVISED -	

STATE OF ILLINOIS
DEPARTMENT OF TRANSPORTATION

PIER DETAILS
STRUCTURE NO. 100-0106

SHEET 26 OF 29 SHEETS

F.A.P. RTE.	SECTION	COUNTY	TOTAL SHEETS	SHEET NO.
331	(1-4)R-5,RS-2,B-1,B-2,B-3,B-4	WILLIAMSON	519	236
		CONTRACT NO. 78373		
	ILLINOIS	FED. AID PROJECT		

2/14/2025 3:08:09 PM

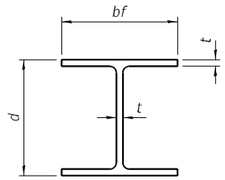

STEEL PILE TABLE

Designation	Depth d	Flange width bf	Web and Flange thickness t	Encasement diameter A
HP 18x181	18	18	1	36"
x157	17¾"	17⅞"	⅞"	36"
x135	17½"	17¾"	¾"	36"
HP 16x183	16½"	16½"	1⅛"	36"
x162	16¼"	16⅛"	1"	36"
x141	16	16	⅞"	36"
x121	15¾"	15⅞"	¾"	36"
HP 14x117	14¼"	14⅞"	13/16"	30"
x102	14"	14¾"	11/16"	30"
x89	13⅞"	14¾"	⅝"	30"
x73	13⅜"	14⅜"	½"	30"
HP 12x84	12¼"	12¼"	11/16"	24"
x74	12⅛"	12¼"	⅝"	24"
x63	12"	12⅛"	½"	24"
x53	11¾"	12"	7/16"	24"
HP 10x57	10"	10¼"	9/16"	24"
x42	9¾"	10⅛"	7/16"	24"
HP 8x36	8"	8⅛"	7/16"	18"

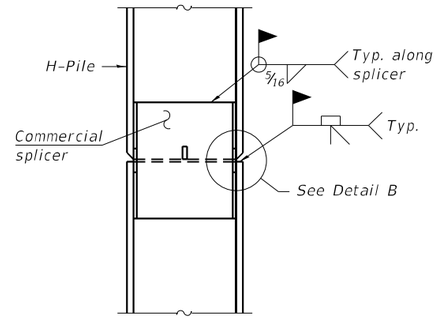

ELEVATION

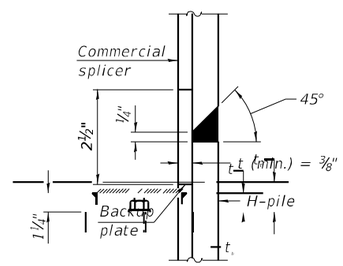

DETAIL B

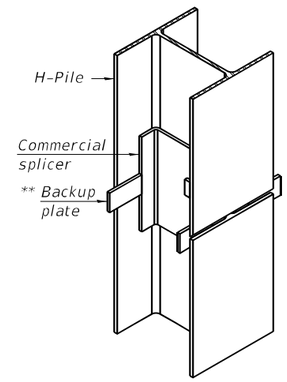

ISOMETRIC VIEW

WELDED COMMERCIAL SPLICE

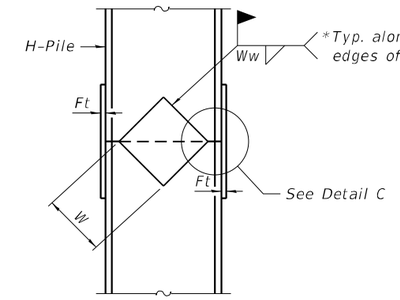

ELEVATION

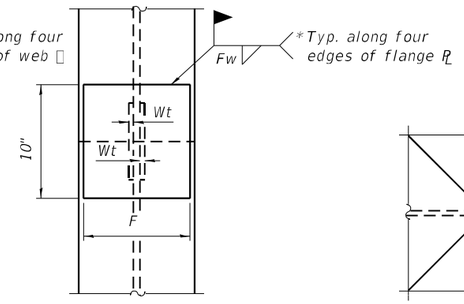

END VIEW

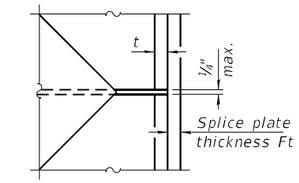

DETAIL C

Designation	F	Ft	Fw	W	Wt	Ww
HP 18x181	15½"	1½"	1"	9½"	⅞"	¾"
x157	15¼"	1¼"	1"	9½"	⅞"	¾"
x135	15¼"	1¼"	1"	9½"	⅞"	¾"
HP 16x183	13¾"	1½"	1"	8¼"	⅞"	¾"
x162	13½"	1½"	1"	8¼"	¾"	⅝"
x141	13½"	1¼"	⅞"	8¼"	¾"	⅝"
x121	13½"	1¼"	⅞"	8¼"	¾"	⅝"
HP 14x117	12½"	1¼"	⅞"	7¾"	⅝"	½"
x102	12½"	1"	¾"	7¾"	⅝"	½"
x89	12½"	⅞"	11/16"	7¾"	⅝"	½"
x73	12½"	¾"	9/16"	7¾"	⅝"	½"
HP 12x84	10"	1"	11/16"	6½"	⅝"	½"
x74	10"	⅞"	11/16"	6½"	⅝"	½"
x63	10"	¾"	½"	6½"	½"	⅜"
x53	10"	¾"	½"	6½"	½"	⅜"
HP 10x57	8"	⅞"	9/16"	5¼"	½"	⅜"
x42	8"	¾"	9/16"	5¼"	½"	⅜"
HP 8x36	6¾"	⅝"	7/16"	4"	½"	⅜"

WELDED PLATE FIELD SPLICE

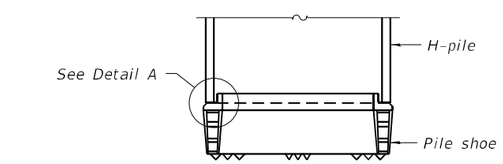

ELEVATION

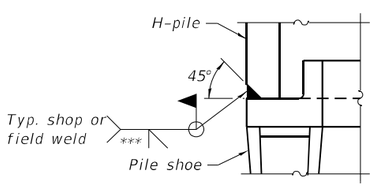

DETAIL A

SHOE ATTACHMENT

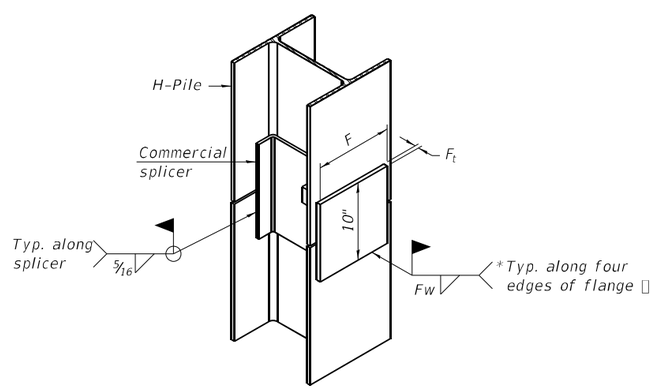

ISOMETRIC VIEW

WELDED COMMERCIAL SPLICE ALTERNATE

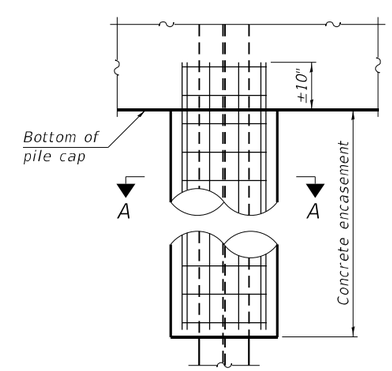

ELEVATION

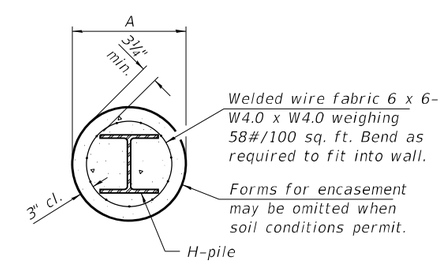

SECTION A-A

INDIVIDUAL PILE CONCRETE ENCASEMENT
(when specified)

Note:
The steel H-piles shall be according to AASHTO M270 Grade 50.

* Interrupt welds ¼" from end of web and/or each flange.

** Remove portions of backup plates that extend outside the flanges.

*** Weld size per pile shoe manufacturer (5/16" min.).

F-HP 10-27-2023

MODEL: Default
FILE NAME: C:\Users\jschreckenberg\Downloads\100-0106-78373-027-HP Pile Details.dgn
2/19/2025 1:13:40 PM

CDI CIVIL DESIGN, INC. WBE / DBE EFFINGHAM, IL LICENSE #184.003222

USER NAME =	DESIGNED – JAG	REVISED –
	CHECKED – JGS	REVISED –
PLOT SCALE =	DRAWN – JAG	REVISED –
PLOT DATE =	CHECKED – JGS	REVISED –

STATE OF ILLINOIS
DEPARTMENT OF TRANSPORTATION

HP PILE DETAILS
STRUCTURE NO. 100-0106
SHEET 27 OF 29 SHEETS

F.A.P. RTE.	SECTION	COUNTY	TOTAL SHEETS	SHEET NO.
331	(1-4)R-5,RS-2,B-1,B-2,B-3,B-4	WILLIAMSON	519	237

CONTRACT NO. 78373
ILLINOIS FED. AID PROJECT

Illinois Department of Transportation
Division of Highways
District 9

SOIL BORING LOG

Date 6/23/14

ROUTE FAP 331 (IL 13) DESCRIPTION IL 13 EB Lanes over Crab Orchard Lake LOGGED BY L. Estel

SECTION 5-3B-3 LOCATION 1.1 mi. E of Jackson Co. (near E Abut.), SEC. 17, TWP. 9S, RNG. 1E, PM

COUNTY Williamson DRILLING METHOD Hollow Stem Auger (8" O.D., 3.25" I.D.) HAMMER TYPE Auto SPT 140 lb

STRUCT. NO. 100-0018
Station 309+50

BORING NO. 1-S
Station 310+40
Offset 13.0ft Rt EB CL
Ground Surface Elev. 414.8 ft

Surface Water Elev. 405.5 ft
Stream Bed Elev. ft

Groundwater Elev.:
First Encounter 404.8 ft
Upon Completion 404.8 ft
After ___ Hrs. ft

Description	Elev.	DEPTH (ft)	BLOWS	UCS Qu (tsf)	MOIST (%)
Cored HMA Pavment	413.80				
Crushed Aggregate (CA-6)	406.80	-5			
Rock Fill (Rip Rap or Crusher Run)	385.30	-10			
Stiff Grey and mottled Brown, Moist CLAY	377.80	-15			
		-20			

Description	Elev.	DEPTH (ft)	BLOWS	UCS Qu (tsf)	MOIST (%)
Rock Fill (Rip Rap or Crusher Run) *(continued)*	390.80				
Soft Grey, V. Moist CLAY	389.30	-25	WOH		
V. Stiff Grey, Moist SILTY CLAY LOAM	387.80		1 3	2.5 S	21
V. Soft Grey, Wet SILTY CLAY	385.30		1 WOH 1	0.2 B	34
Soft Grey and mottled Brown, V. Moist CLAY to SILTY CLAY	380.30	-30	WOH WOH WOH	0.4 B	30
V. Stiff Grey and mottled Brown, Moist CLAY	377.80	-35	1 2 3	2.1 B	27
Stiff Grey and mottled Brown, Moist CLAY		-40	1 2 2	1.5 B	35

The Unconfined Compressive Strength (UCS) Failure Mode is indicated by (B-Bulge, S-Shear, P-Penetrometer, E-Estimated)
Abbreviations W.O.H - Sampler Advanced By Weight of Hammer, W.O.P - Advanced by Weight of Pipe, B.S. - Before Seating
The SPT (N value) is the sum of the last two blow values in each sampling zone (AASHTO T206) BBS, from 137 (Rev. 8-99)

File Name S:\MATERIALS GEOTECHNICAL UNIT\GINT\PROJECTS\PROJECTS FILE\WILLIAMSON\STRUCTURES\100-0018 IL 13 EB OVER CRAB ORCHARD LAKE\100-0018 IL 13 EB OVER CRAB ORCHARD LAKE 2020.GPJ Data Template D8TEMPLT.GDT Date Printed 4/14/
Latitude 37 44 41.75 Longitude -89 37 51.9 Datum NAD83 Job Number

Illinois Department of Transportation
Division of Highways
District 9

SOIL BORING LOG

Date 6/23/14

ROUTE FAP 331 (IL 13) DESCRIPTION IL 13 EB Lanes over Crab Orchard Lake LOGGED BY L. Estel

SECTION 5-3B-3 LOCATION 1.1 mi. E of Jackson Co. (near E Abut.), SEC. 17, TWP. 9S, RNG. 1E, PM

COUNTY Williamson DRILLING METHOD Hollow Stem Auger (8" O.D., 3.25" I.D.) HAMMER TYPE Auto SPT 140 lb

STRUCT. NO. 100-0018
Station 309+50

BORING NO. 1-S
Station 310+40
Offset 13.0ft Rt EB CL
Ground Surface Elev. 414.8 ft

Surface Water Elev. 405.5 ft
Stream Bed Elev. ft

Groundwater Elev.:
First Encounter 404.8 ft
Upon Completion 404.8 ft
After ___ Hrs. ft

Description	Elev.	DEPTH (ft)	BLOWS	UCS Qu (tsf)	MOIST (%)
Stiff Grey and mottled Brown, Moist CLAY *(continued)*	370.30		2 3	1.8 B	31
Medium Grey and mottled Brown, V. Moist CLAY	364.80	-45	WOH 1 2	0.8 B	28
Stiff Brown and mottled Grey, Moist CLAY	360.30	-50	1 2 2	1.6 B	23
V. Stiff Brown and mottled Grey, Moist CLAY		-55	1 3 5	2.9 B	20
		-60	1		

Description	Elev.	DEPTH (ft)	BLOWS	UCS Qu (tsf)	MOIST (%)
V. Stiff Brown and mottled Grey, Moist CLAY *(continued)*	352.30		4 6	2.3 B	21
V. Dense Grey, Dry SANDSTONE with CLAY SHALE seams	349.90	-65	100/5"		
(end of boring) Bottom of hole @ 64.9 feet Free water observed at 10.0 feet Ground Surface Elevation referenced to BM at NW corner of SN 100-0018; Elev. 416.6 SPT Hammer Efficiency: 75% (To convert "N" values to "N60", multiply by 1.25)		-70			
		-75			
		-80			

The Unconfined Compressive Strength (UCS) Failure Mode is indicated by (B-Bulge, S-Shear, P-Penetrometer, E-Estimated)
Abbreviations W.O.H - Sampler Advanced By Weight of Hammer, W.O.P - Advanced by Weight of Pipe, B.S. - Before Seating
The SPT (N value) is the sum of the last two blow values in each sampling zone (AASHTO T206) BBS, from 137 (Rev. 8-99)

Illinois Department of Transportation
Division of Highways
District 9

SOIL BORING LOG

Date 6/18/14

ROUTE FAP 331 (IL 13) DESCRIPTION IL 13 EB Lanes over Crab Orchard Lake LOGGED BY L. Estel

SECTION 5-3B-3 LOCATION 1.1 mi. E of Jackson Co. (near W Abut.), SEC. 17, TWP. 9S, RNG. 1E, PM

COUNTY Williamson DRILLING METHOD Hollow Stem Auger (8" O.D., 3.25" I.D.) HAMMER TYPE Auto SPT 140 lb

STRUCT. NO. 100-0018
Station 309+50

BORING NO. 2-S
Station 308+53
Offset 14.0ft Rt EB CL
Ground Surface Elev. 414.9 ft

Surface Water Elev. 405.5 ft
Stream Bed Elev. ft

Groundwater Elev.:
First Encounter 403.9 ft
Upon Completion ft
After ___ Hrs. ft

Description	Elev.	DEPTH (ft)	BLOWS	UCS Qu (tsf)	MOIST (%)
Cored HMA Pavement	413.90				
Crushed Aggregate (CA-6)					
			14		
			25		
			19		
		-5	28		
			45		
			39		
			9		
			13		
			9		
Rock Fill (Rip Rap or Crusher Run)	405.40	-10	8		
			20		
			10		
Note: despite low blow counts the material encountered from 9.5 to 26.0 ft was primarily boulder sized with some gravel and sand recovered in the sample tube.			6		
			6		
			3		
		-15	3		
			4		
			3		
			5		
			1		
			1		
		-20	1		
Rock Fill (Rip Rap or Crusher Run)			5		
			1		
Note: despite low blow counts the material encountered from 9.5 to 26.0 ft was primarily boulder sized with some gravel and sand recovered in the sample tube. *(continued)*			1		
			5		
			1		
		-25	1		
			WOH		
			1		
Medium Grey, V. Moist CLAY to SILTY CLAY	388.90				
			WOH		
			WOH	0.7	32
			1	B	
Medium Grey and mottled Brown, V. Moist SILT LOAM to SILTY CLAY LOAM	385.40	-30	WOH		
			WOH	0.7	29
			1	B	
Medium Grey and mottled Brown, V. Moist CLAY to SILTY CLAY	382.90		1		
			1	0.7	28
			1	B	
Medium Brown and mottled Grey, V. Moist SILTY CLAY to SILTY CLAY LOAM	380.40	-35	1		
			2	0.8	26
			2	B	
Medium Grey, V. Moist CLAY	377.90		WOH		
			1	0.8	27
			1	B	
	375.40	-40	WOH		

The Unconfined Compressive Strength (UCS) Failure Mode is indicated by (B-Bulge, S-Shear, P-Penetrometer, E-Estimated)
Abbreviations W.O.H - Sampler Advanced By Weight of Hammer, W.O.P - Advanced by Weight of Pipe, B.S. - Before Seating
The SPT (N value) is the sum of the last two blow values in each sampling zone (AASHTO T206) BBS, from 137 (Rev. 8-99)

File Name S:\MATERIALS GEOTECHNICAL UNIT\GINT\PROJECTS\PROJECTS FILE\WILLIAMSON\STRUCTURES\100-0018 IL 13 EB OVER CRAB ORCHARD LAKE\100-0018 IL 13 EB OVER CRAB ORCHARD LAKE 2020.GPJ Data Template D8TEMPLT.GDT Date Printed 4/14/
Latitude 37 44 41.76 Longitude -89 07 54.19 Datum NAD83 Job Number

Illinois Department of Transportation
Division of Highways
District 9

SOIL BORING LOG

Date 6/18/14

ROUTE FAP 331 (IL 13) DESCRIPTION IL 13 EB Lanes over Crab Orchard Lake LOGGED BY L. Estel

SECTION 5-3B-3 LOCATION 1.1 mi. E of Jackson Co. (near W Abut.), SEC. 17, TWP. 9S, RNG. 1E, PM

COUNTY Williamson DRILLING METHOD Hollow Stem Auger (8" O.D., 3.25" I.D.) HAMMER TYPE Auto SPT 140 lb

STRUCT. NO. 100-0018
Station 309+50

BORING NO. 2-S
Station 308+53
Offset 14.0ft Rt EB CL
Ground Surface Elev. 414.9 ft

Surface Water Elev. 405.5 ft
Stream Bed Elev. ft

Groundwater Elev.:
First Encounter 403.9 ft
Upon Completion ft
After ___ Hrs. ft

Description	Elev.	DEPTH (ft)	BLOWS	UCS Qu (tsf)	MOIST (%)
Stiff Grey and mottled Brown, Moist to V. Moist CLAY *(continued)*			1	1.1	27
			1	B	
		-45	1		
			2	1.2	27
			5	B	
		-50	1		
			2	1.4	37
			2	B	
Medium Grey, V. Moist CLAY to SILTY CLAY	360.40	-55	WOH		
			1	0.6	24
			WOH	B	
	355.40	-60	WOH		
Soft Grey, V. Moist CLAY to SILTY CLAY *(continued)*			WOH	0.4	24
			WOH	B	
	350.40	-65	2		
Stiff Grey, Moist SANDY CLAY with broken SANDSTONE			3	1.8	19
			10	B	
	348.40				
Very Dense Grey, Dry SANDSTONE with Black CLAY SHALE LENSES			100/1"		
	345.20	-70	100/2"		
(end of boring)					
Bottom of hole @ 69.7 feet					
Ground Surface Elevation referenced to benchmark at NW corner of SN 100-0018; Elev. 416.6		-75			
SPT Hammer Efficiency: 75% (To convert "N" values to "N60", multiply by 1.25)					
Note: During drilling in the rock fill from 9.5 to 26.0 feet, the augers were "kicked out" of plumb such that coring was not possible					
		-80			

The Unconfined Compressive Strength (UCS) Failure Mode is indicated by (B-Bulge, S-Shear, P-Penetrometer, E-Estimated)
Abbreviations W.O.H - Sampler Advanced By Weight of Hammer, W.O.P - Advanced by Weight of Pipe, B.S. - Before Seating
The SPT (N value) is the sum of the last two blow values in each sampling zone (AASHTO T206) BBS, from 137 (Rev. 8-99)

File Name S:\MATERIALS GEOTECHNICAL UNIT\GINT\PROJECTS\PROJECTS FILE\WILLIAMSON\STRUCTURES\100-0018 IL 13 EB OVER CRAB ORCHARD LAKE\100-0018 IL 13 EB OVER CRAB ORCHARD LAKE 2020.GPJ Data Template D8TEMPLT.GDT Date Printed 4/14/
Latitude 37 44 41.76 Longitude -89 07 54.19 Datum NAD83 Job Number

BM □ Cut in S.W. Corner N. Hub Guard of Existing Bridge
86' Lt. Sta. 308+82 El. 415.59
Existing Structure to remain in place and serve as W.B. Lanes.

STATE OF ILLINOIS
DEPARTMENT OF PUBLIC WORKS & BUILDINGS
DIVISION OF HIGHWAYS

ROUTE NO.	SECTION	COUNTY	TOTAL SHEETS	SHEET NO.
S.B.I. F.A. 14	5-3B-3	WILLIAMSON	18	6
FED. ROAD DIST. NO. 7	ILLINOIS	FED. AID PROJECT-		

SHEET NO. 1
8 SHEETS

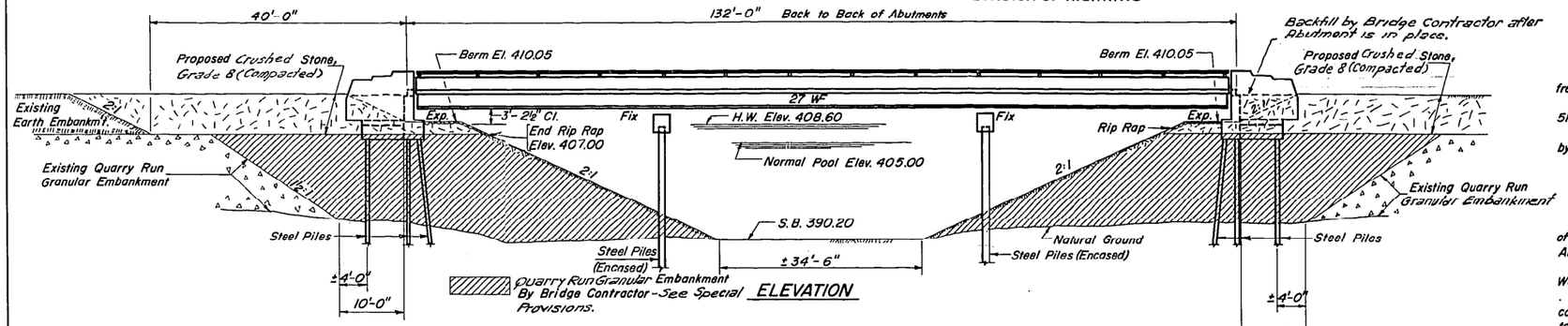

ELEVATION

STATION 309+50
BUILT 196 BY
STATE OF ILLINOIS
F.A. RT. 14 SEC. 5-3B-3
F.A. PROJECT F-15(17)
LOADING H20-S16

NAME PLATE
See Standard 2113-1
Location at S.W. Wing Wall

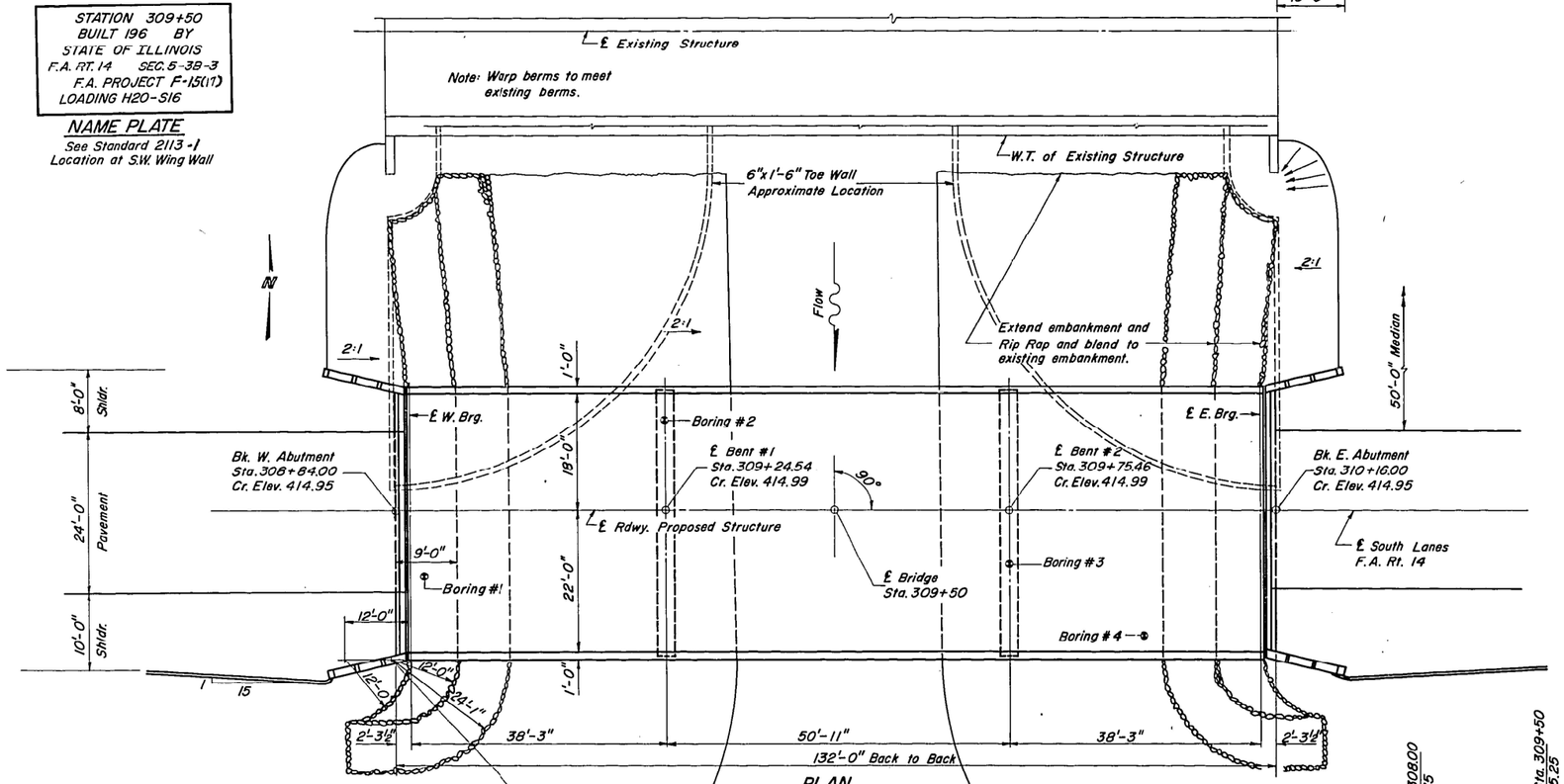

PLAN

DESIGNED	Thomas D. Williams
CHECKED	Emery J. Stricker
DRAWN	Paul Barnett
CHECKED	E.S.

FEB 18 1964

EXAMINED — ENGINEER OF BRIDGE AND TRAFFIC STRUCTURES

PASSED — ENGINEER OF DESIGN

APPROVED — CHIEF HIGHWAY ENGINEER

WATERWAY INFORMATION

Drainage Area 900 Acres
Character --- Rolling, wooded, & Cultivated
Required Opening -- Controlled by Existing Structure
Present Opening 1,303 Sq.Ft.
Proposed Opening 1,303 Sq.Ft.

DESIGN STRESSES

fc = 1,400 p.s.i. Super. & Sub.
vc = 75 p.s.i. Footing.
fs = 20,000 p.s.i. Reinf.
fs = 20,000 p.s.i. Struct.
n = 10
Loading H-20-S16-44

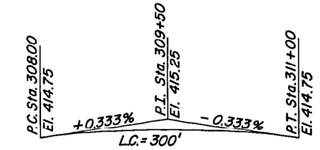

V.C. DATA

FOR INFORMATION ONLY

GENERAL NOTES

Class X Concrete shall be used throughout.

Coarse aggregate to be used in parapet handrails and end post must be free of chert, flint, limonite, lignite, and soft sandstone.

The concrete floor slab shall be finished in accordance with Article 51.19 of the Standard Specifications.

Layout of Embankment varied to suit ground conditions in the field as directed by the Engineer.

All reinforcement bars shall be lapped 20 diameters unless otherwise shown.

Rivets ¾"ϕ, Open Holes 13/16"ϕ, unless otherwise noted.

Anchor bolts shall be set before riveting diaphragms over supports.

All Structural Steel shall conform to A.S.T.M. Specifications (A-36).

The exposed surfaces of the expansion guard shall be given two shop coats of red lead paint, the contact surfaces shall be given one coat of red lead paint. Anchor Studs shall not be painted.

Expansion guards are included in the quantity of Structural Steel. Estimated Weight = 2196 lbs.

Except as otherwise provided, all Structural Steel shall receive one shop coat of red lead paint and two field coats of aluminum paint. See Article 56.1 to 56.5 inclusive of the Standard Specifications.

The Contractor shall drive one Steel Test Pile (10BP-42), at the West Abutment in a permanent location as directed by the Engineer before ordering the remainder of piles.

The cost of driving any piling through the existing slope wall will be considered incidental to the Contract.

All piling must be driven before the granular embankment is placed.

TOTAL BILL OF MATERIAL

ITEM	UNIT	SUPER.	SUB.	TOTAL
Class X Concrete	Cu.Yds.	145.2	101.0	246.2
Structural Steel	Lbs.	113,090		113,090
Aluminum Handrail	Lin. Ft.	258		258
Reinforcement Bars	Lbs.	35,420	7450	42,870
Steel Piles (10BP-42)	Lin. Ft.		1860	1860
Test Piles Steel (10BP-42)	Each		1	1
Furn. & Filling Metal Shells	Lin. Ft.		252	252
Name Plates	Each	1		1
Protective Coat	Sq.Yds.	690		690
* Bridge Seat Sealant	Lump Sum		1	1

* Applied at Abutments only.

LOCATION SKETCH

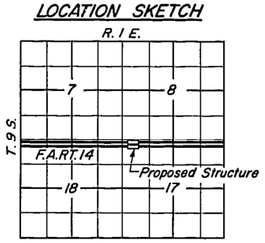

WEST BRIDGE OVER PORTION OF
CRAB ORCHARD LAKE
PROJECT F-15( )
GENERAL PLAN AND ELEVATION
F.A. RT. 14 SEC. 5-3B-3
WILLIAMSON COUNTY
STA. 309+50.00

CDI — CIVIL DESIGN, INC. WBE / DBE — EFFINGHAM, IL LICENSE #184.003222	USER NAME =	DESIGNED – JAG	REVISED –
		CHECKED – JGS	REVISED –
	PLOT SCALE =	DRAWN – JAG	REVISED –
	PLOT DATE =	CHECKED – JGS	REVISED –

STATE OF ILLINOIS
DEPARTMENT OF TRANSPORTATION

EX. STRUCTURE - GPE
STRUCTURE NO. 100-0106

F.A.P. RTE.	SECTION	COUNTY	TOTAL SHEETS	SHEET NO.
331	(1-4)R-5, RS-2, B-1, B-2, B-3, B-4	WILLIAMSON	519	240
		CONTRACT NO. 78373		
		ILLINOIS	FED. AID PROJECT	

MODEL: Default
FILE NAME: C:\Users\jschreckenberg\Downloads\106-100-0106-78373-030-Existing Structure_GPE.dgn
2/11/2025 5:31:29 PM

STATE OF ILLINOIS
DEPARTMENT OF PUBLIC WORKS & BUILDINGS
DIVISION OF HIGHWAYS

ROUTE NO.	SECTION	COUNTY	TOTAL SHEETS	SHEET NO.
S.B.I. F.A. 14	5-3B-3	WILLIAMSON	18	7
FED. ROAD DIST. NO. 7	ILLINOIS	FED. AID PROJECT-		

SHEET NO. 2
8 SHEETS

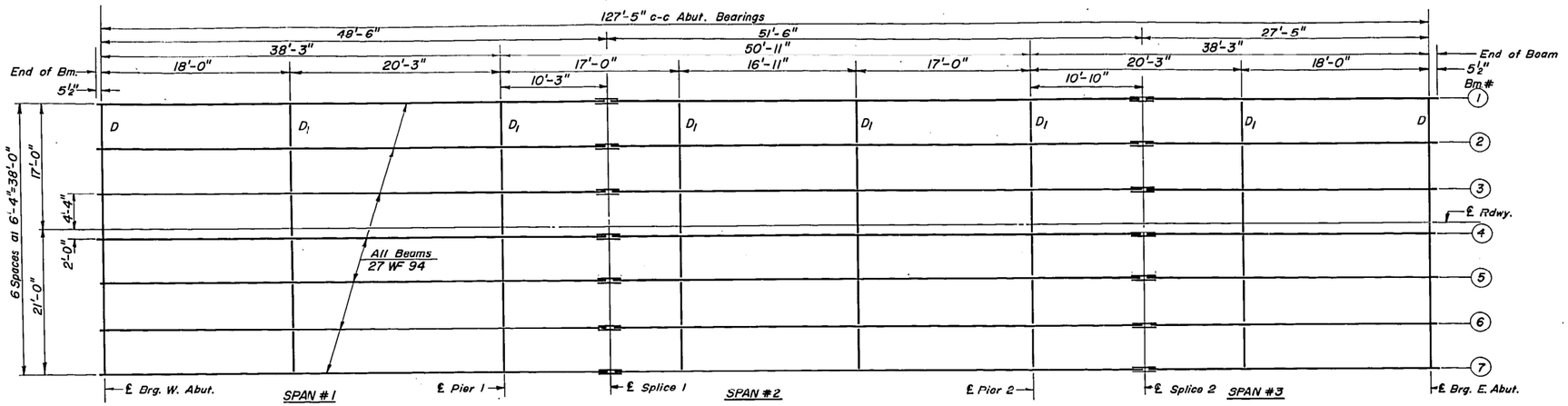

FRAMING PLAN

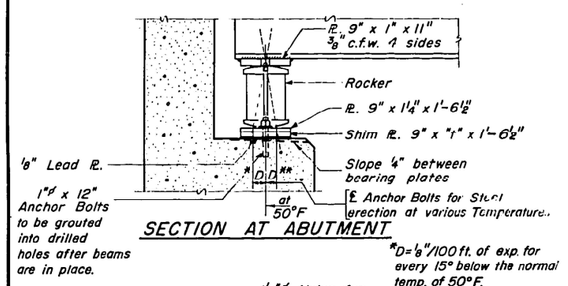

SECTION AT ABUTMENT

*D=⅛"/100 ft. of exp. for every 15° below the normal temp. of 50°F.
D**=⅛"/100 ft. of exp. for every 15° above the normal temp. of 50°F.

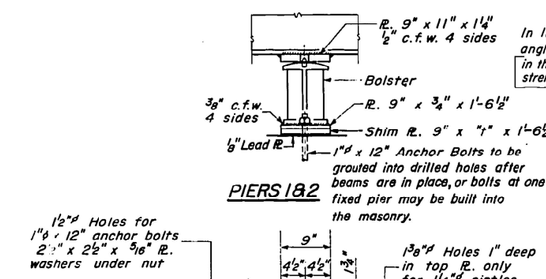

PIERS 1 & 2

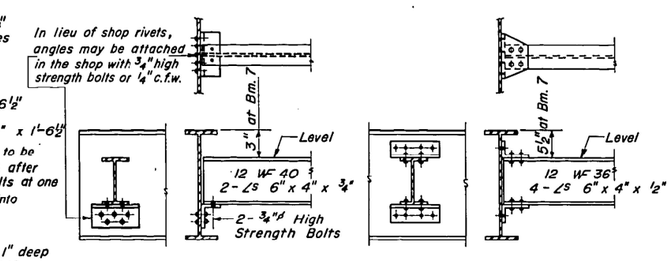

DIAPHRAGM D
12 Required

DIAPHRAGM D1
36 Required

ELEVATION TOP OF WF

BEAM	1	2	3	4	5	6	7
Full Length	414.13	414.26	414.34	414.36	414.30	414.18	414.05

Beams shall be fabricated on a level line.

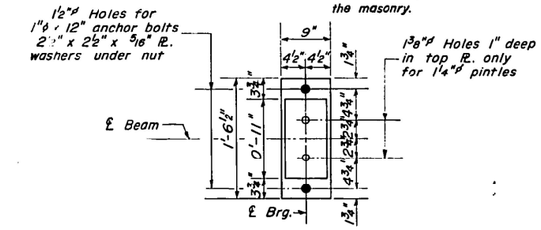

PLAN

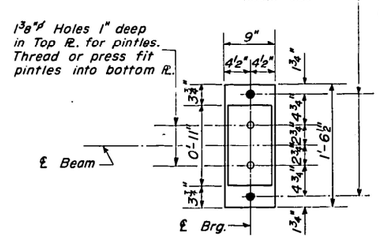

PLAN

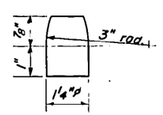

DETAIL OF PINTLE

TABLE OF "t" DIMENSIONS

BEAM	1,5,6, & 7	2	3	4
All Bearings	0"	½"	½"	¾"

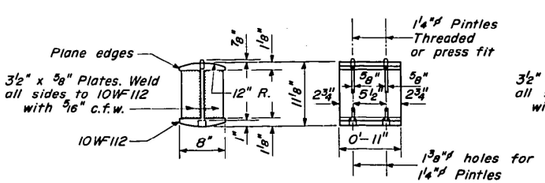

DETAIL OF ROCKER AT ABUTMENTS

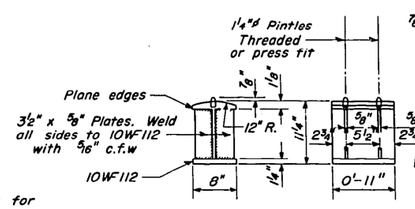

DETAIL OF BOLSTER AT PIERS 1 & 2

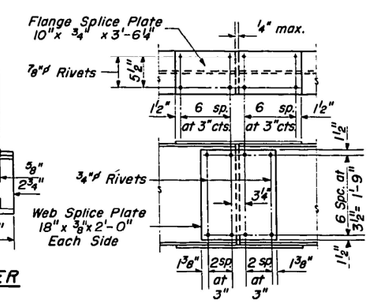

DETAIL OF SPLICE

STRUCTURAL STEEL

F.A. RT. 14 SEC. 5-3B-3
WILLIAMSON COUNTY
STA. 309+50.00

DESIGNED	Thomas O. Willis	
CHECKED	Emery J. Stricker	
P.G. Barnett		
DRAWN	W. A. Sausaman Jr.	
CHECKED	E. S.	

FEB 18 1964
EXAMINED — ENGINEER OF BRIDGE AND TRAFFIC STRUCTURES
PASSED — ENGINEER OF DESIGN
APPROVED — CHIEF HIGHWAY ENGINEER

I-2 7-2-62 Rev. 11-9-62 Rev. 8-16-63 Rev. 12-10-63

FOR INFORMATION ONLY

MODEL: Default
FILE NAME: C:\Users\schreckenberg\Downloads\106100-0106-78373-031-Existing Structure_Framing.dgn
2/11/2025 5:33:01 PM

CDI
CIVIL DESIGN, INC.
WBE | DBE
EFFINGHAM, IL
LICENSE #184.003222

USER NAME =	DESIGNED – JAG	REVISED –	
	CHECKED – JGS	REVISED –	
PLOT SCALE =	DRAWN – JAG	REVISED –	
PLOT DATE =	CHECKED – JGS	REVISED –	

STATE OF ILLINOIS
DEPARTMENT OF TRANSPORTATION

EX. STRUCTURE - FRAMING PLAN
STRUCTURE NO. 100-0106

F.A.P. RTE.	SECTION	COUNTY	TOTAL SHEETS	SHEET NO.
331	(1-4)R-5, RS-2, B-1, B-2, B-3, B-4	WILLIAMSON	519	241
		CONTRACT NO. 78373		
	ILLINOIS	FED. AID PROJECT		

STATE OF ILLINOIS
DEPARTMENT OF PUBLIC WORKS & BUILDINGS
DIVISION OF HIGHWAYS

ROUTE NO.	SECTION	COUNTY	TOTAL SHEETS	SHEET NO.
S.B.I. F.A. 14	5-3B-3	WILLIAMSON	18	8
FED. ROAD DIST. NO. 7	ILLINOIS	FED. AID PROJECT-		

SHEET NO. 3
8 SHEETS

Note:
Bars indicated thus 20x3-#5 etc. indicates 20 lines of bars with 3 lengths per line.
Min. bar laps = 20 dia.

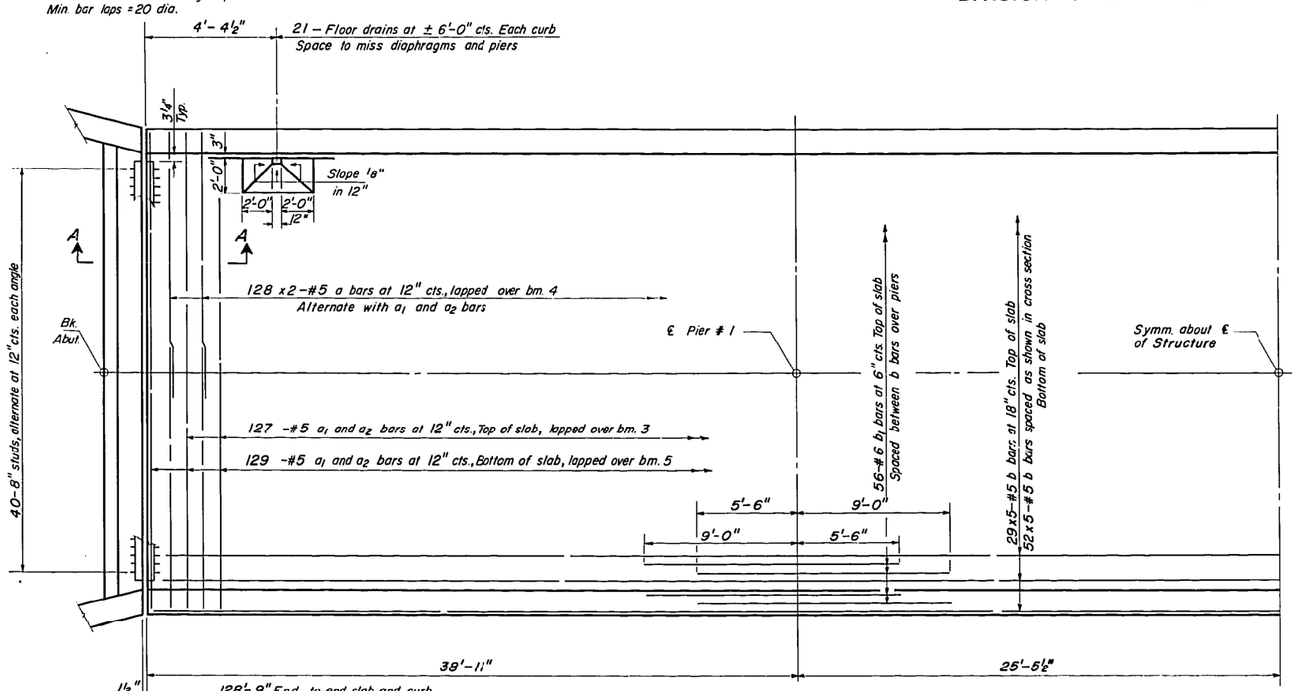

HALF PLAN

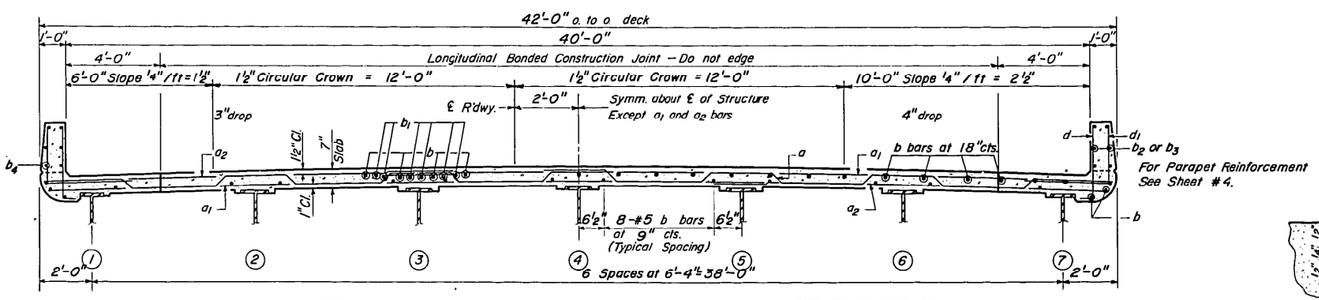

NEAR PIERS

CROSS SECTION

NEAR MIDSPAN

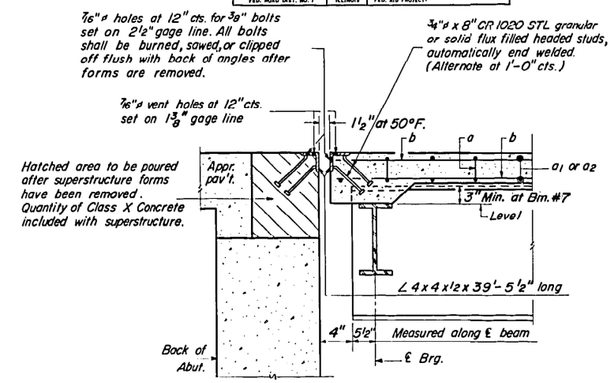

SECTION A-A

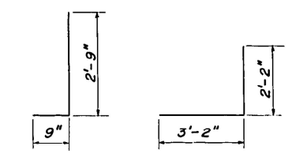

BAR d

BAR d1

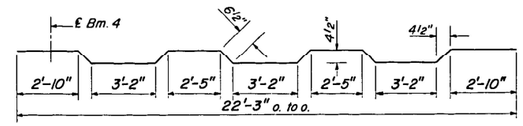

BAR a

BILL OF MATERIAL

Bar	No.	Size	Length	Shape
a	256	#5	23'-3"	
a1	256	#5	27'-6"	
a2	256	#5	14'-9"	
b	405	#5	26'-9"	
b1	112	#6	14'-6"	
b2	24	#5	18'-9"	
b3	48	#5	16'-0"	
b4	48	#5	6'-3"	
d	322	#5	3'-6"	
d1	258	#5	5'-4"	
Class X Concrete			Cu. Yd.	145.2
Reinforcement Bars			Lbs.	35,420
Structural Steel			Lbs.	113,080

* Weight of bearing assemblies with lead plates and anchor bolts are included as structural steel.
Est. Weight = 6762#

SUPERSTRUCTURE

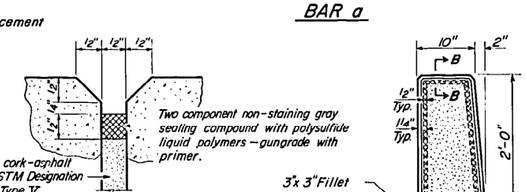

SECTION B-B

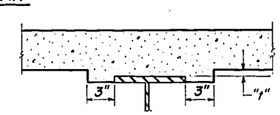

STANDARD FILLET DETAIL

To determine "f": After all structural steel has been erected, elevations of the top flanges of the beams shall be taken at intervals shown on sheet 5. These elevations subtracted from the "Grade Elevations Adjusted for Dead Load Deflections" shown on sheet 5, minus slab thickness, equals the fillet heights "f" above top of beams.

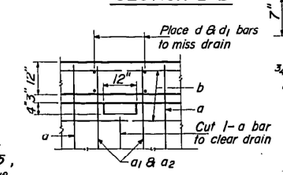

TYP. DETAIL AT DRAIN

PARAPET DETAIL

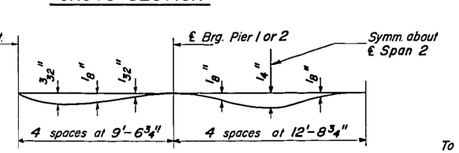

DEAD LOAD DEFLECTION DIAGRAM
(Includes weight of concrete only)

Note: The above deflections are not to be used in the field if the engineer is working from the grade elevations adjusted for dead load deflections as shown on sheet #5.

DESIGNED	Thomas D. Wilson	
CHECKED	Emery A. Stricker	
DRAWN	Paul G. Barnett / D.L. Beemer	
CHECKED	E.S.	

FeB 18 1964.

EXAMINED — ENGINEER OF BRIDGE AND TRAFFIC STRUCTURES
PASSED — ENGINEER OF DESIGN
APPROVED — CHIEF HIGHWAY ENGINEER

I-7-0 11-15-62

FOR INFORMATION ONLY

F.A. RT. 14 SEC. 5-3B-3
WILLIAMSON COUNTY
STA. 309+50

CIVIL DESIGN, INC. WBE / DBE — EFFINGHAM, IL — LICENSE #184.003222	USER NAME =	DESIGNED - JAG	REVISED -
		CHECKED - JGS	REVISED -
	PLOT SCALE =	DRAWN - JAG	REVISED -
	PLOT DATE =	CHECKED - JGS	REVISED -

STATE OF ILLINOIS
DEPARTMENT OF TRANSPORTATION

EX. STRUCTURE - SUPERSTRUCTURE
STRUCTURE NO. 100-0106

F.A.P. RTE.	SECTION	COUNTY	TOTAL SHEETS	SHEET NO.
331	(1-4)R-5, RS-2, B-1, B-2, B-3, B-4	WILLIAMSON	519	242
		CONTRACT NO. 78373		
		ILLINOIS FED. AID PROJECT		

MODEL: Default
FILE NAME: C:\Users\schreckenberg\Downloads\106100-0106-78373-032-Existing Structure_Superstructure Det.dgn
2/11/2025 5:34:11 PM

STATE OF ILLINOIS
DEPARTMENT OF PUBLIC WORKS & BUILDINGS
DIVISION OF HIGHWAYS

ROUTE NO.	SECTION	COUNTY	TOTAL SHEETS	SHEET NO.
I.B.I. F.A. 14	5-3B-3	WILLIAMSON	18	9
FED. ROAD DIST. NO. 7	ILLINOIS	FED. AID PROJECT-		

SHEET NO. 4
8 SHEETS

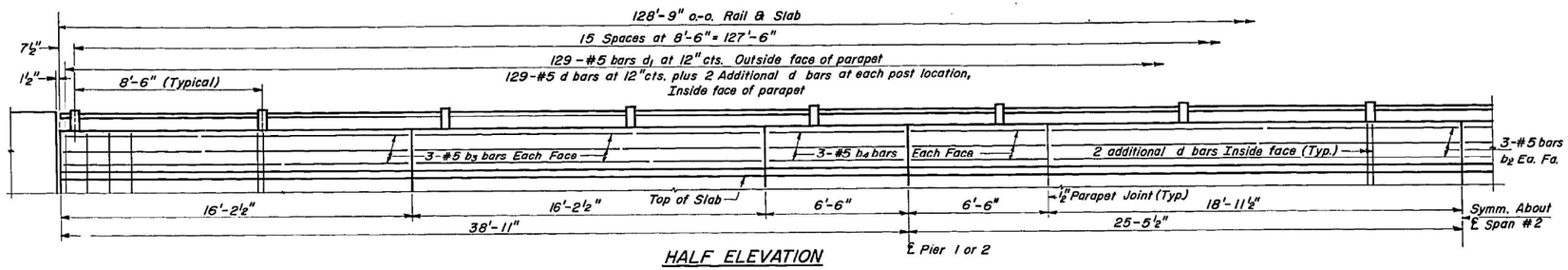

HALF ELEVATION

NOTE:
Parapet reinforcement and concrete included with Superstructure Bill Of Material.

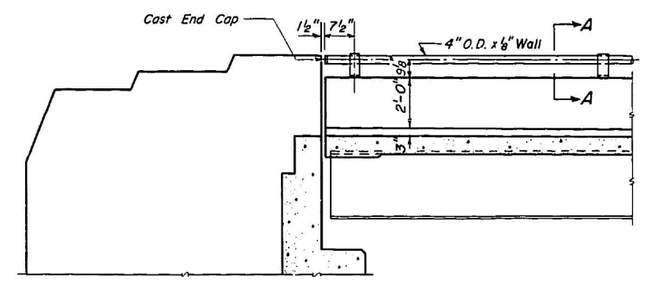

ELEVATION - END POST

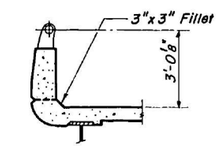

SEC. THRU CURB

BILL OF MATERIAL

Item	Unit	Quantity
Aluminum Handrail	Lin. Ft.	258

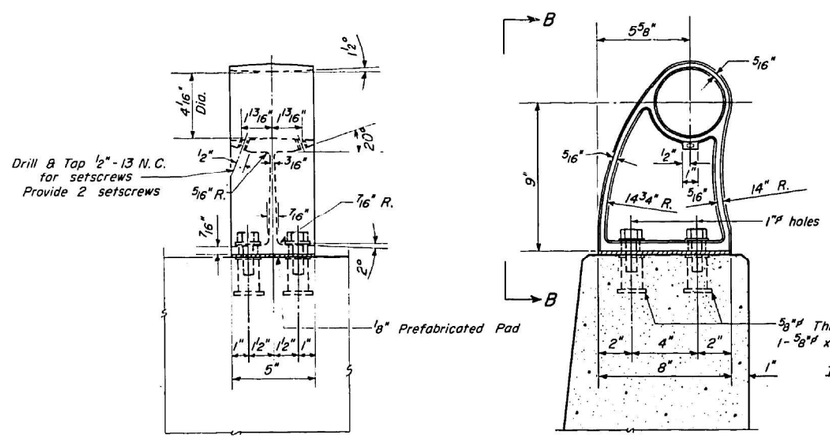

VIEW B-B

SECTION A-A

RAIL POST DETAILS

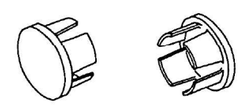

CAST END CAP
DRIVE FIT TYPE
4 - Required
Incidental to item "Aluminum Handrail"

NOTES

All Posts shall be placed normal to parapet

All Posts shall be of Aluminum conforming to ASTM Specification B-108 alloy 5G-70B-T6.

All Rail Tubing shall be of Aluminum conforming to ASTM Specification B-235 alloy 6061-T6.

Aluminum handrail shall be measured in lineal feet. The length paid for shall be the overall length along the top longitudinal railing member through all post and gaps.

Rail Tubing may extend a maximum of 3 panel lengths

For material composition of Prefabricated Pad, See Art. 54.9 (f), (Bearings and Anchorage), of the Std. Specs.

Set Screws shall be of Aluminum conforming to ASTM Specification B-211 alloy 2024-T4.

Aluminum handrail will be paid for at the contract unit price per lineal foot for ALUMINUM HANDRAIL, measured as specified, which price shall be payment in full for all materials, fabrication, transportation and erection.

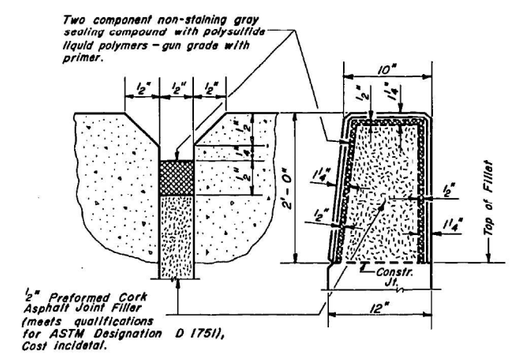

PARAPET JOINT DETAIL

ALUMINUM HANDRAIL
PARAPET REINFORCEMENT

F.A. RT. 14 SEC. 5-3B-3
WILLAMSION COUNTY
STA. 309+50

DESIGNED	D. Williams
CHECKED	E. J. Pilla
P.G.B. DRAWN	P.G. Barnett W. A. Sausaman
CHECKED	E. S.

FEB 18 1964
EXAMINED — ENGINEER OF BRIDGE AND TRAFFIC STRUCTURES
PASSED — ENGINEER OF DESIGN
APPROVED — CHIEF HIGHWAY ENGINEER

R-10 Drawn 2-16-60 Rev. 11-2-62 Rev. 7-17-63

FOR INFORMATION ONLY

MODEL: Default
FILE NAME: C:\Users\jschreckenberg\Downloads\106100-0106-78373-033-Existing Structure_Superstructure Det 2.dgn
2/11/2025 5:42:21 PM

CDI
CIVIL DESIGN, INC.
WBE / DBE
EFFINGHAM, IL
LICENSE #184.003222

USER NAME =	DESIGNED - JAG	REVISED -	
	CHECKED - JGS	REVISED -	
PLOT SCALE =	DRAWN - JAG	REVISED -	
PLOT DATE =	CHECKED - JGS	REVISED -	

STATE OF ILLINOIS
DEPARTMENT OF TRANSPORTATION

EX. STRUCTURE - SUPERSTRUCTURE DETAILS
STRUCTURE NO. 100-0106

F.A.P. RTE.	SECTION	COUNTY	TOTAL SHEETS	SHEET NO.
331	(1-4)R-5,RS-2,B-1,B-2,B-3,B-4	WILLIAMSON	519	243
		CONTRACT NO. 78373		
		ILLINOIS FED. AID PROJECT		

STATE OF ILLINOIS
DEPARTMENT OF PUBLIC WORKS & BUILDINGS
DIVISION OF HIGHWAYS

ROUTE NO.	SECTION	COUNTY	TOTAL SHEETS	SHEET NO.
F. A. I. 14	5-3B-3	WILLIAMSON	18	11
FED. ROAD DIST. NO. 7	ILLINOIS	FED. AID PROJECT-		

SHEET NO. 6
8 SHEETS

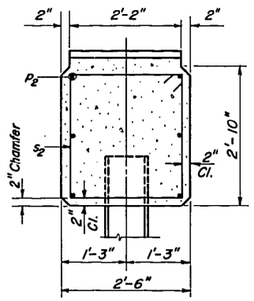

SECTION B-B

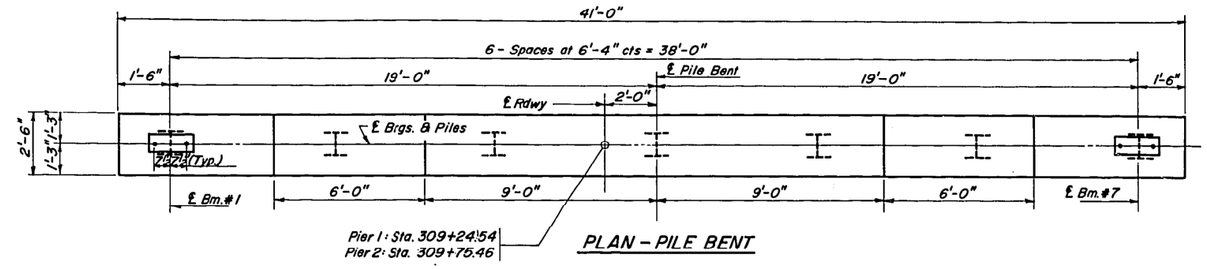

PLAN - PILE BENT

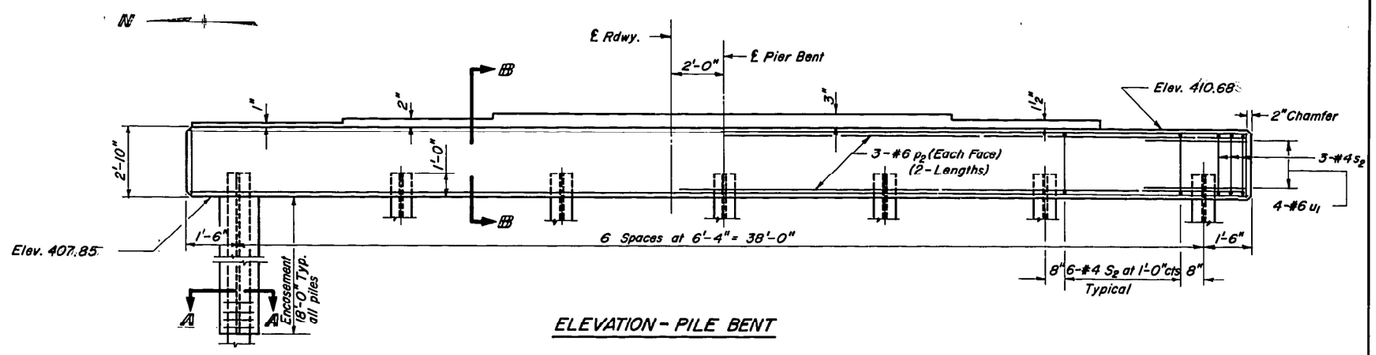

ELEVATION - PILE BENT

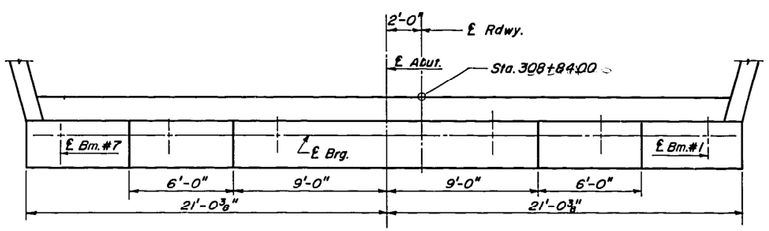

PLAN

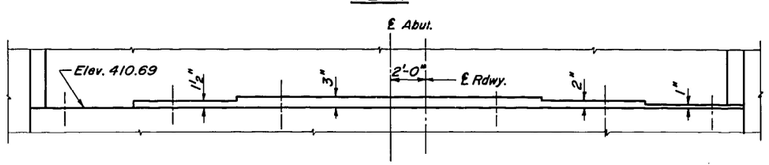

ELEVATION
West Abutment Bearing Seat
(Looking West)

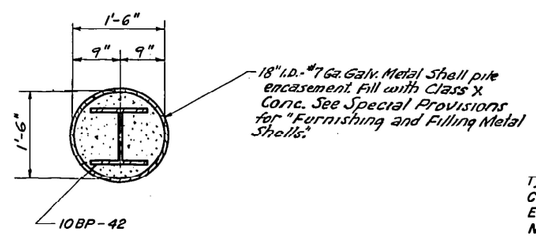

SECTION A-A

PILE DATA
(2 Bents)
Type: Steel (10 BP-42)
Capacity: Drive to Refusal
Est. Length: ± 60'-0"
No. Reqd.: 14

TWO PILE BENTS
BILL OF MATERIAL

BAR	NO.	SIZE	LENGTH	SHAPE
P_2	24	#6	21'-0"	——
S_2	84	#4	10'-1"	⊡
U_1	16	#6	10'-1"	⊐
Class X Concrete			Cu. Yds.	22.6
Reinforcement Bars			Lbs.	1570
Steel Piles 10 BP-42			Lin. Ft.	840
Furn. & Filling Metal Shells			Lin. Ft.	252

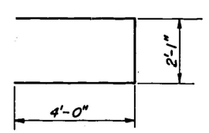

BAR U_1

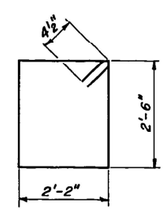

BAR S_2

DESIGNED	Thomas O. Williams
CHECKED	Emmett J. Sliker
DRAWN	Paul Barnett
CHECKED	E.S.

FEB 18 1964
EXAMINED W. E. Baumann — ENGINEER OF BRIDGE AND TRAFFIC STRUCTURES
PASSED E. L. Sliwa — ENGINEER OF DESIGN
APPROVED J. E. Snyder — CHIEF HIGHWAY ENGINEER

PIERS - PILE BENTS
& WEST ABUTMENT STEPS

F.A. RT. 14 SEC. 5-3B-3
WILLIAMSON COUNTY
STA. 309+50

FOR INFORMATION ONLY

MODEL: Default
FILE NAME: C:\Users\jschreckenberg\Downloads\100-0106-78373-034-Existing Structure_Substructure Det 1.dgn

CDI CIVIL DESIGN, INC. WBE / DBE EFFINGHAM, IL LICENSE #184.003222

USER NAME =	DESIGNED – JAG	REVISED –	
	CHECKED – JGS	REVISED –	
PLOT SCALE =	DRAWN – JAG	REVISED –	
PLOT DATE =	CHECKED – JGS	REVISED –	

STATE OF ILLINOIS
DEPARTMENT OF TRANSPORTATION

EX. STRUCTURE - SUBSTRUCTURE DETAILS 1
STRUCTURE NO. 100-0106

F.A.P. RTE.	SECTION	COUNTY	TOTAL SHEETS	SHEET NO.
331	(1-4)R-5, RS-2, B-1, B-2, B-3, B-4	WILLIAMSON	519	244
		CONTRACT NO. 78373		
		ILLINOIS	FED. AID PROJECT	

2/11/2025 5:48:56 PM

STATE OF ILLINOIS
DEPARTMENT OF PUBLIC WORKS & BUILDINGS
DIVISION OF HIGHWAYS

ROUTE NO.	SECTION	COUNTY	TOTAL SHEETS	SHEET NO.
F.A.S. 1 / F.A. 14	5-3B-3	WILLIAMSON	18	12
FED. ROAD DIST. NO. 7	ILLINOIS	FED. AID PROJECT-		

SHEET NO. 7
8 SHEETS

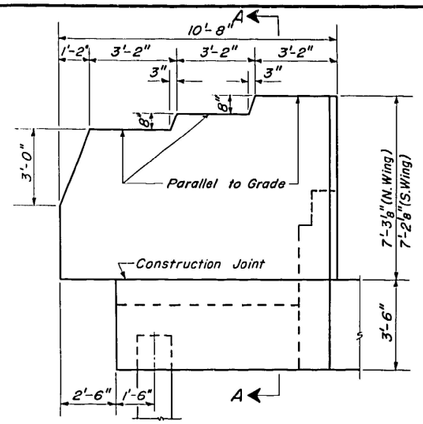

WING WALL ELEVATION
Dimensions

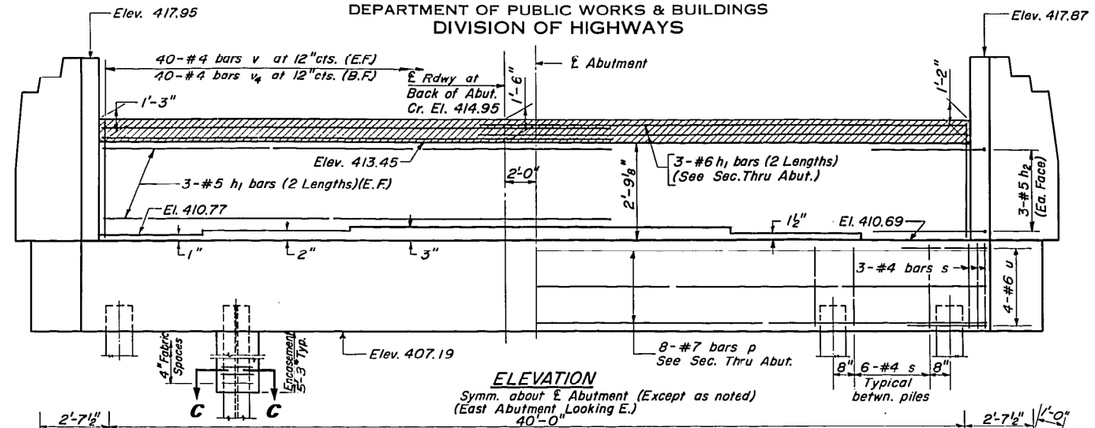

ELEVATION
Symm. about ℄ Abutment (Except as noted)
(East Abutment Looking E.)

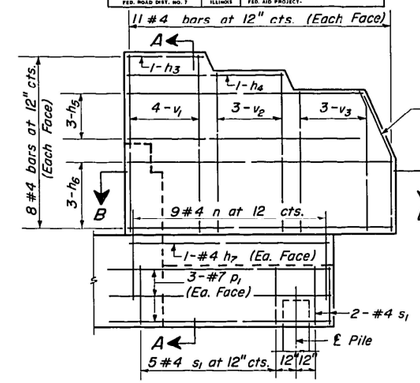

WING WALL ELEVATION
Reinforcement

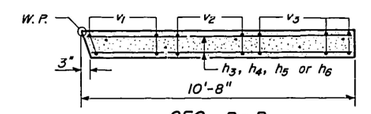

SEC. B-B

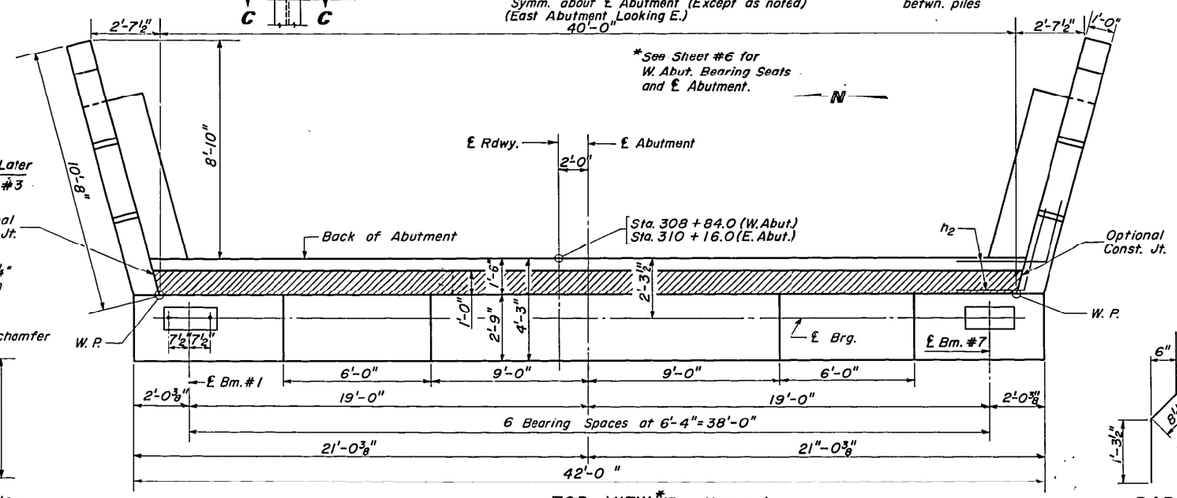

TOP VIEW *(East Abutment)

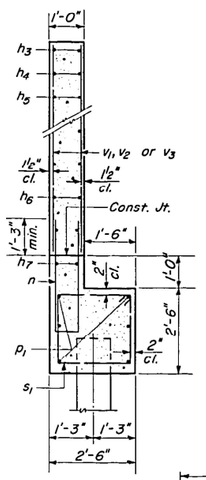

SEC. A-A

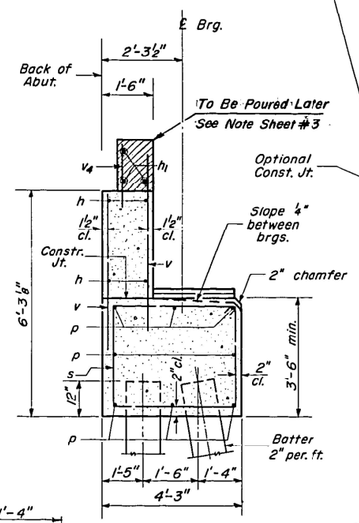

SEC. THRU ABUT.

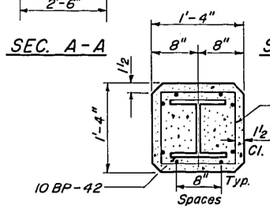

Welded Wire Fabric 4"x8" 10/12 Wt 20#/100 Sq. Ft.
Lap Splices 6"
Cost Incidental
Cost of Class X Conc. Encasement incidental.

SECTION C-C

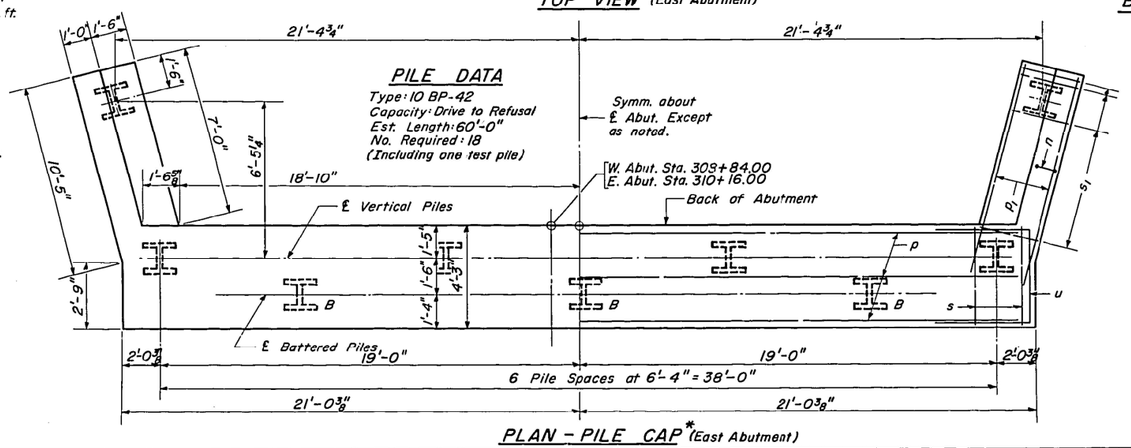

PILE DATA
Type: 10 BP-42
Capacity: Drive to Refusal
Est. Length: 60'-0"
No. Required: 18
(Including one test pile)

PLAN - PILE CAP *(East Abutment)

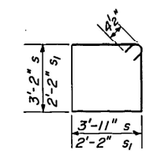

BAR s & s1

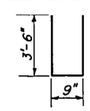

BAR n

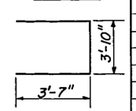

BAR u

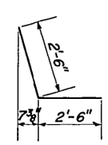

BAR h2

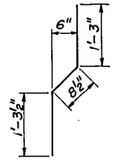

BAR v4

TWO ABUTMENTS
BILL OF MATERIAL

Bar	No.	Size	Length	Shape
h	24	#5	21'-0"	—
h1	12	#6	21'-0"	—
h2	24	#5	5'-0"	L
h3	8	#4	2'-9"	—
h4	8	#4	6'-0"	—
h5	24	#4	9'-0"	—
h6	24	#4	10'-3"	—
h7	8	#4	10'-6"	—
n	36	#4	7'-9"	U
p	16	#7	41'-6"	—
p1	24	#7	11'-0"	—
s	84	#4	14'-11"	□
s1	28	#4	9'-5"	□
u	16	#6	11'-0"	⊐
v	160	#4	5'-0"	—
v1	32	#4	7'-0"	—
v2	24	#4	6'-3"	—
v3	32	#4	5'-8"	—
v	80	#4	3'-3"	—
Class X Concrete			Cu. Yds.	78.4
Reinforcement Bars			Lbs.	5880
Steel Piles 10 BP-42			Lin. Ft.	1020
Test Piles			Ea.	1

ABUTMENTS

F.A. RT. 14 SEC. 5-3B-3
WILLIAMSON COUNTY
STA. 309+50

DESIGNED	Thomas O. Willson	FEB 18 1964
CHECKED	Emery J. Stricker	EXAMINED — ENGINEER OF BRIDGE AND TRAFFIC STRUCTURES
DRAWN	Paul E. Barnett, W. A. Sausaman Jr.	PASSED — ENGINEER OF DESIGN
CHECKED	E.J.	APPROVED — CHIEF HIGHWAY ENGINEER

A-8 7-18-62 Rev. 11-27-62

FOR INFORMATION ONLY

MODEL: Default
FILE NAME: C:\Users\schreckenberg\Downloads\106100-0106-78373-035-Existing Structure_Substructure Det 2.dgn
2/11/2025 5:50:32 PM

CDI
CIVIL DESIGN, INC.
WBE / DBE
EFFINGHAM, IL
LICENSE #184.003222

USER NAME =	DESIGNED – JAG	REVISED –	
	CHECKED – JGS	REVISED –	
PLOT SCALE =	DRAWN – JAG	REVISED –	
PLOT DATE =	CHECKED – JGS	REVISED –	

STATE OF ILLINOIS
DEPARTMENT OF TRANSPORTATION

EX. STRUCTURE - SUBSTRUCTURE DETAILS 2
STRUCTURE NO. 100-0106

F.A.P. RTE.	SECTION	COUNTY	TOTAL SHEETS	SHEET NO.
331	(1-4)R-5, RS-2, B-1, B-2, B-3, B-4	WILLIAMSON	519	245
		CONTRACT NO. 78373		
		ILLINOIS FED. AID PROJECT		

STATE OF ILLINOIS
DEPARTMENT OF PUBLIC WORKS & BUILDINGS
DIVISION OF HIGHWAYS

ROUTE NO.	SECTION	COUNTY	TOTAL SHEETS	SHEET NO.
F.A.P. 14	5-38-3	WILLIAMSON	18	13
FED. ROAD DIST. NO. 7	ILLINOIS	FED. AID PROJECT		

SHEET NO. 8
SHEETS 8

COUNTY Williamson
Boring No. 1
Station 308+88
Offset 10 ft. Rt.

Surface Water El. 405.0
Groundwater El. at Completion —
After — Hours —

Description	Elevation	N	Qu t/s.f.	w (%)
Ground Surface	390.1 0			
Soft wet gray clay A-6(12-13)	387.7	2	0.8P	27 22
Medium wet gray clay A7-6(15)	-5 384.2	1	1.0P	20
Medium moist gray mottled brown silty clay loam A-6(9-10)	-10 379.7	6	0.8B	24
		6	Lost Sample	
		6	1.0B	24
Medium moist gray mottled brown silty clay A-6(10-11)	376.7 375.7 -15	7	0.8B	25
Very stiff moist gray mottled brown and black clay A7-6(14-15)	373.2	12	3.0B	21
See next column		11	1.4B	22
	-20	10	1.6B	24

Description	Elevation	N	Qu t/s.f.	w (%)
Medium to stiff moist gray mottled brown to dark gray clay A7-6(15+)	-25	8	0.7B	40
		7	0.7B	27
	360.7 -30	5	0.8B	40
Medium moist gray silty clay loam A-6(8-9)	358.2	6	0.7B	29
Medium very moist gray silty clay A-6(10-11)	-35	5	0.6B	23
	353.2	6	0.5B	22
Medium to stiff moist to very moist gray clay loam A-4(8)	-40	4	0.6B	20
		15	1.0B	16
	346.7			
Dense moist gray mottled brown sandy gravel with clay binder	346.0 -45	100	Blows in 8"	12

COUNTY Williamson
Boring No. 2
Station 309+24.5
Offset 14' Lt.

Surface Water El. 402.7
Groundwater El. at Completion *
After * Hours *

Description	Elevation	N	Qu t/s.f.	w (%)
Ground Surface	388.9 0			
Medium moist gray mottled brown silty clay loam A-4(8)	-5	9	0.8B	24
Medium moist brown mottled black silty clay loam A-6(9-10)	379.9 -10	7	0.8B	25
	377.4	7	1.4B	26
Stiff moist gray mottled brown silty clay to clay A-6(11-13)	-15	9	1.4B	25
		9	1.4B	26
	-20	7	Lost Sample	
	367.4			
See next column				

Description	Elevation	N	Qu t/s.f.	w (%)
Medium moist dark gray mottled brown silty clay loam A-6(9-10)		7	0.9B	30
	363.9 -25	9	1.2B	31
Medium to stiff moist dark gray clay A7-6(15-17)		5	Lost Sample	
	359.4 -30			
Medium moist dark gray clay A7-6(13-14)		5	0.6P	27
	357.4			
Medium moist to very moist dark gray silty clay to clay A-6(11-12)		6	0.5P	47
	-35	6	Lost Sample	
	350.9	8	0.8P	24
Medium fine to coarse very moist light brown sandy gravel with clay loam binder	-40	49	—	15
	346.2	100	—	16
Rotten gray sandstone	346.0	Blows 9"	—	—
Bottom of Hole = 42.9 ft. *Boring taken in Lake through 13.8 feet of water. Washing procedure used in drilling entire hole	-45			

COUNTY Williamson
Boring No. 3
Station 309+75.5
Offset 8 ft. Rt.

Surface Water El. 403.1
Groundwater El. at Completion *
After — Hours *

Description	Elevation	N	Qu t/s.f.	w (%)
Ground Surface	391.0 0			
Stiff to medium moist gray mottled brown silty clay loam A-4(8)		19	1.5B	28.5
	-5			
Stiff to medium moist gray mottled brown and black silty clay loam A-6(9-10)	384.5	9	0.6B	27
	-10	6	1.0B	26
		12	Lost Sample	
		5	0.7B	29
	376.0 -15			
Stiff moist gray mottled brown and black clay A7-6(15-17)		11	1.3B	24
	-40			
	350.5	9	2.0B	27
	348.0			
Rotten moist brown sandstone	347.8	100	Blows in 3"	18
Bottom of Hole = 43.2 ft. *Boring taken in lake through 13.1 feet of water. Washing procedure used in drilling entire hole.	-45			

Description	Elevation	N	Qu t/s.f.	w (%)
Stiff moist gray mottled brown clay A7-6(17+)		10	1.1P	40
	366.0 -25			
Medium moist gray mottled brown clay A7-6(14-15)	364.5	6	0.7B	43
Medium moist to very moist gray mottled brown silty clay to clay A-6(11-12) with some vegetation	-30	8	1.0P	25
		5	0.8B	29
	-35	7	0.8P	30
		6	0.8B	26
	-40	5	0.6B	20
	350.5			
Medium moist bluish gray mottled brown sandy gravel with clay loam binder		40	—	12
	348.0			
Rotten moist brown sandstone	347.8	100	Blows in 3"	18
Bottom of Hole = 43.2 ft. *Boring taken in lake through 13.1 feet of water. Washing procedure used in drilling entire hole.	-45			

COUNTY Williamson
Boring No. 1
Station 308+88
Offset 10 ft. Rt.

Description	Elevation	N	Qu t/s.f.	w (%)
	40			
see previous sheet		15	1.0B	16
	346.7			
Dense moist gray mottled brown sandy gravel with clay binder	346.0	100	Blows 8"	12
	4.5		Cored 80% Recovery	
Hard gray fine grained sandstone with thin laminations of black sandy shale	341.0			
Bottom of Hole 49.1 feet	5 -40			
Washing procedure used in drilling entire hole.				
Location: Near the N.W. corner of the NW¼, NW¼ Sec. 17, R1E, T9S,3 P.M.	-45			

COUNTY Williamson
Boring No. 4
Station 309+96
Offset 19 ft. Rt.

Surface Water El. 403.2
Groundwater El. at Completion *
After * Hours *

Description	Elevation	N	Qu t/s.f.	w (%)
Ground Surface	391.0 0			
Medium moist light brown mottled gray and black clay A7-6(14-15)	386.5	5	0.8B 0.3P	43 31
Soft very moist gray mottled black silt loam A-4(8) with rotten vegetation	-5 385.0			
Stiff moist gray mottled brown silty clay loam A-6(9)		6	1.1B	26
	381.0 -10	7	1.0B	23
Medium moist light brown mottled black silty clay loam A-6(9-10)		9	0.8B	24
	377.0			
Stiff moist gray mottled brown and black clay A7-6(17+)	-15	13	2.0B	30
		9	1.6B	34
	372.5			
Medium moist gray mottled brown and black clay A7-6(17+)	-20	8	0.8B	43
		6	1.0B	45

Description	Elevation	N	Qu t/s.f.	w (%)
See previous column				
	-25	11	Lost Sample	
	365.0			
Medium moist dark gray clay A7-6(15)		7	1.0B	30
	362.5			
Medium very moist dark gray silty clay A-6(11-12) with some rotten vegetation	-30	6	0.6B	27
		6	0.8B	32
	357.0			
Soft very moist dark gray silty clay loam A-6(9-10) with some rotten vegetation	-35	9	0.4B	29
	354.5			
Medium to soft very moist dark gray silty clay A7-6(12-13) with some rotten vegetation		6	0.8P	24
	351.5	19	0.3P	29
Soft gray mottled brown sandy shale with silt seams	-40 350.0			
Soft light brown sandstone	349.5	100	Blows in 5"	
			Cored 40% Recovery	
	-45			

COUNTY Williamson
Boring No. 4
Station 309+96
Offset 19 ft. Rt.

Description	Elevation	N	Qu t/s.f.	w (%)
	40			
See previous sheet	350.0			
Soft light brown sandstone	349.5	100	Blows in 6"	
Medium hard light brown to gray sandstone with thin laminations of black sandy shale			Cored 40% Recovery	
	4.5 344.5			
Bottom of Hole = 46.5 ft. *Boring taken in Lake through 12.2 feet of water. Washing procedure used in drilling entire hole.	-40			

N – Standard Penetration Test – Blows per foot to drive 2" O.D. Split Spoon Sampler 12" with 140# hammer falling 30".

Qu – Unconfined Compressive Strength – t/sf

w – Water Content – percentage of over dry weight – %.

Type failure
B – Bulge Failure
S – Shear Failure
E – Estimated Value
P – Penetrometer Value

DESIGNED	T.O. WILLIAMS
CHECKED	Emery J. Stuber
DRAWN	T.D.W.
CHECKED	E.S.

FEB 18 1964

EXAMINED W. C. Baumann — ENGINEER OF BRIDGE AND TRAFFIC STRUCTURES

PASSED E. L. Sheets — ENGINEER OF DESIGN

APPROVED O. E. Sedgfield — CHIEF ENGINEER

BORINGS
F.A. RTE. 14 SEC. 5-3B-3
WILLIAMSON COUNTY
STA. 309+50

FOR INFORMATION ONLY

MODEL: Default
FILE NAME: C:\Users\schreckenberg\Downloads\106100-0106-78373-036-Existing Borings.dgn

CDI — CIVIL DESIGN, INC. WBE / DBE — EFFINGHAM, IL — LICENSE #184.003222

USER NAME =	DESIGNED – JAG	REVISED –	
	CHECKED – JGS	REVISED –	
PLOT SCALE =	DRAWN – JAG	REVISED –	
PLOT DATE =	CHECKED – JGS	REVISED –	

STATE OF ILLINOIS
DEPARTMENT OF TRANSPORTATION

EX. STRUCTURE - BORINGS
STRUCTURE NO. 100-0106

F.A.P. RTE.	SECTION	COUNTY	TOTAL SHEETS	SHEET NO.
331	(1-4)R-5,RS-2,B-1,B-2,B-3,B-4	WILLIAMSON	519	246
		CONTRACT NO. 78373		
	ILLINOIS	FED. AID PROJECT		

2/11/2025 5:57:58 PM

Bench Mark: Sq. cut in N.W. corner W. wall of S.N. 100-0020.

Existing Structure: S.N. 100-0066 was originally constructed in 1939 under F.A. Proj. 15, Section 5-B1 and 5-A1. An extensive reconstruction was built in 1989 under F.A. Route 410, Section (5B-1)DR. This reconstruction included an entirely new superstructure, abutments, and pier caps. The structure is a three span (39'-7", 50'-0", 39'-7") continuous wide flange bridge with seven beam lines on pile bent abutments. The structure is 133'-6" from bk. to bk. abutments on a zero degree skew. The clear width is 40'-0" between face to face of parapets and the overall out to out width of the bridge is 43'-2". The composite superstructure consists of seven beam lines of W24x62 for spans one and three, and W24x68 for span two, on 6'-4" centers. The reinforced concrete deck thickness is 7 1/2". The bridge deck is on a normal crown. The abutments are pile bent abutments on H-piles driven to refusal. The wingwalls are typical 12" thick dog ear wing walls. Each pier is comprised of 6 original precast concrete piles, two new H-piles encased in concrete driven to refusal, and new pier caps installed in 1989. There is a fiber optics utility that runs through the backwalls on the abutments and spans the entire length of the bridge on hangers.

Road closure shall be used during construction. Traffic will be detoured on the adjacent structure using crossovers.

No salvage.

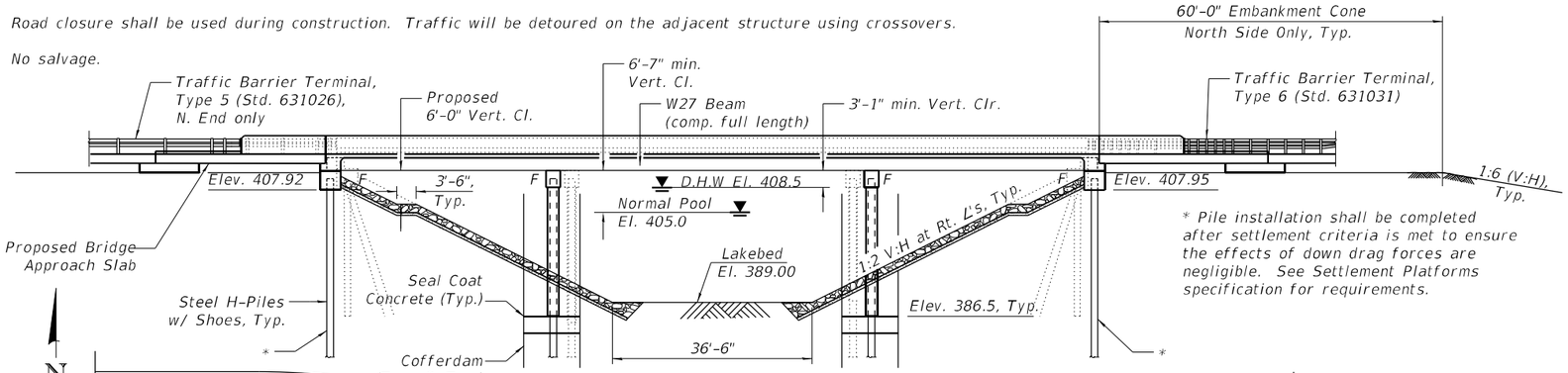

* Pile installation shall be completed after settlement criteria is met to ensure the effects of down drag forces are negligible. See Settlement Platforms specification for requirements.

ELEVATION

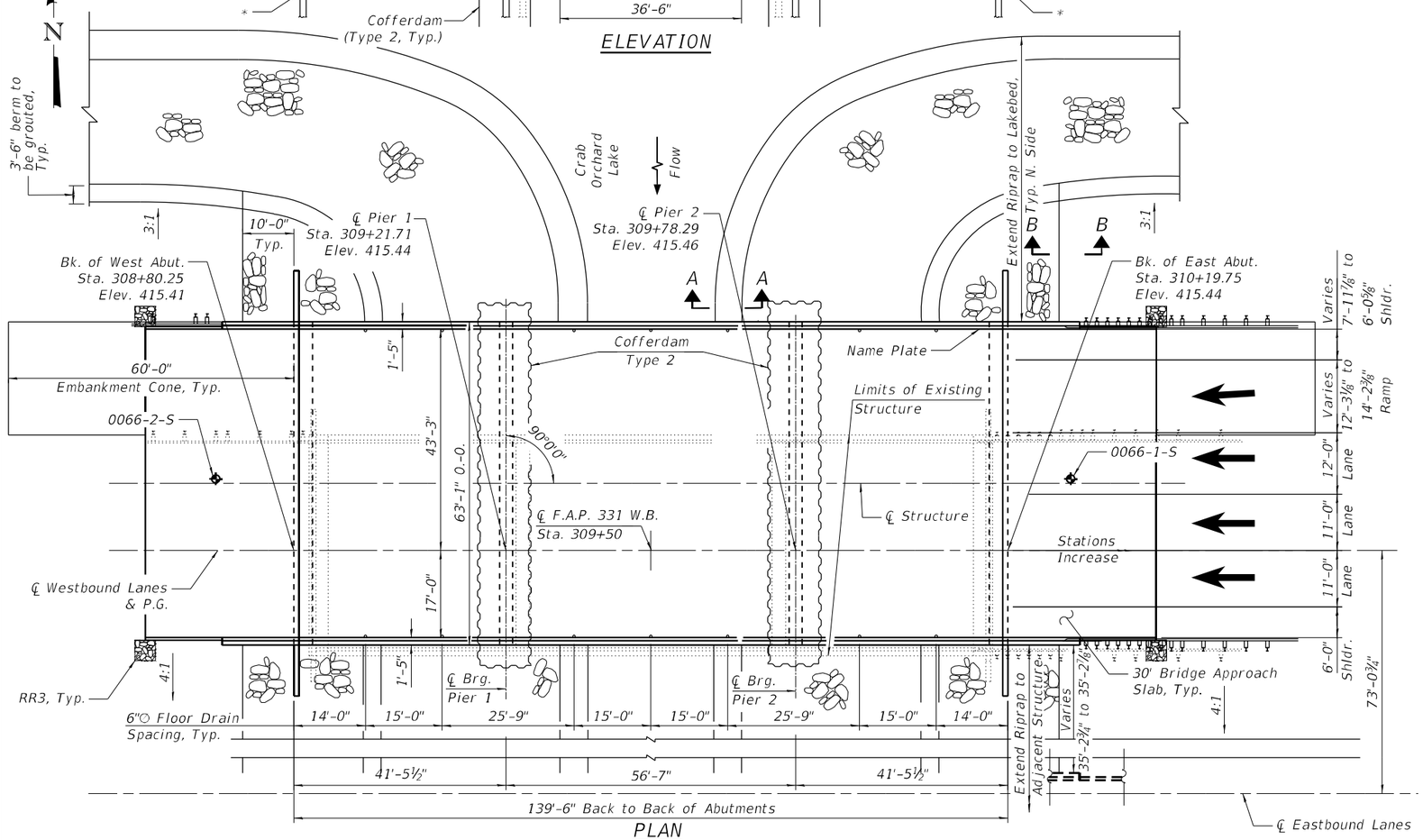

PLAN

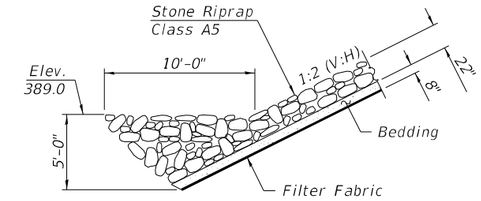

SECTION A-A

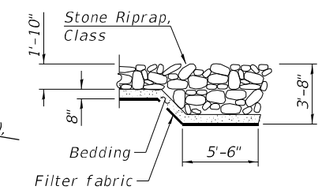

SECTION B-B

LOADING HL-93

Allow 50#/sq. ft. for future wearing surface.

DESIGN SPECIFICATIONS

2020 AASHTO LRFD Bridge Design Specifications, 9th Edition.

DESIGN STRESSES

FIELD UNITS

f'c = 3,500 psi (Substructure)
f'c = 4,000 psi (Superstructure)
fy = 60,000 psi (Reinforcement)
fy = 50,000 psi (M270 Grade 50)
All new structural steel to be galvanized.

SEISMIC DATA

Seismic Performance Zone (SPZ) = 3
Design Spectral Acceleration at 1.0 sec. (SD1) = 0.359g
Design Spectral Acceleration at 0.2 sec. (SDS) = 0.864g
Soil Site Class = D

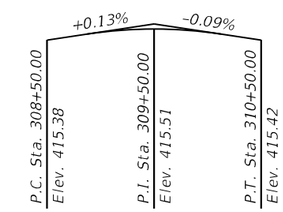

PROFILE GRADE

Along ℄ Westbound Lanes

Notes:

Up to a ¼" to be ground off deck and approach slabs. The Profile Grade shows the final grade after grinding.

See Roadway Plans for Rip Rap quantities and pay items.

STATE OF ILLINOIS
JOHANN F. AAKRE
081-006828
CHICAGO, ILLINOIS
LICENSED STRUCTURAL ENGINEER

EXPIRES: 11/30/2026
DATE: 02/21/2025

Sheets 22 thru 24 of 28.

STATE OF ILLINOIS
DEWEY H. COULTAS
81-4539
SPRINGFIELD
LICENSED STRUCTURAL ENGINEER

EXPIRES: 11/30/2026
DATE: 02/21/2025

Sheets 19 thru 21 of 28.

LICENSED STRUCTURAL ENGINEER
JASON G. SCHRECKENBERG
081.006845
STATE OF ILLINOIS

EXPIRES: 11/30/2026
DATE: 02/21/2025

Sheets 1 thru 18 and 25 thru 28 of 28.

APPROVED
For Structural Adequacy Only
Engineer of Bridges & Structures

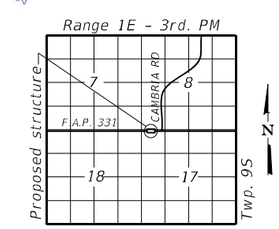

LOCATION SKETCH

GENERAL PLAN AND ELEVATION
IL 13 W.B. OVER CRAB ORCHARD LAKE
F.A.P. RT. 331 - SEC. 1-4(B-2)
WILLIAMSON COUNTY
STATION 309+50.00
STRUCTURE NO. 100-0107

CDI CIVIL DESIGN, INC. WBE / DBE EFFINGHAM, IL LICENSE #184.003222	USER NAME =	DESIGNED – JAG	REVISED –
		CHECKED – JGS	REVISED –
	PLOT SCALE =	DRAWN – JAG	REVISED –
	PLOT DATE =	CHECKED – JGS	REVISED –

STATE OF ILLINOIS
DEPARTMENT OF TRANSPORTATION

GENERAL PLAN & ELEVATION
STRUCTURE NO. 100-0107
SHEET 1 OF 28 SHEETS

F.A.P. RTE.	SECTION	COUNTY	TOTAL SHEETS	SHEET NO.
331	(1-4)R-5,RS-2,B-1,B-2,B-3,B-4	WILLIAMSON	519	247
		CONTRACT NO. 78373		
	ILLINOIS	FED. AID PROJECT		

MODEL: Default
FILE NAME: P:\5XXX\50XX-51XX\5000 - IDOT PTB 200-038 D9 IL 13 Crab Orchard Bridges\24-Structures\CAD-MS\100-0107-78373-001-GPE.dgn
3/11/2025 6:04:37 AM

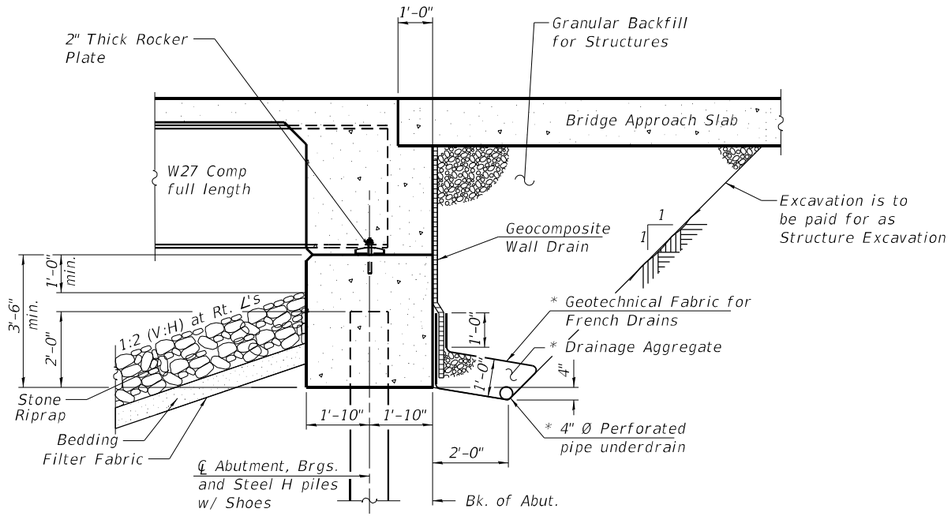

SECTION THRU INTEGRAL ABUTMENT

(Horiz. dim. @ Rt. L's)

* Included in the cost of Pipe Underdrains for Structures.

All drainage system components shall extend 2'-0" from the end of each wingwall except an outlet pipe shall extend until intersecting with the side slopes. The pipes shall drain into concrete headwalls. (See Article 601.05 of the Standard Specifications and Highway Standard 601101).

WATERWAY INFORMATION

Drainage Area = 1.3 Sq. mi. Low Grade Elev. 411.65 @ Sta. 310+17

Flood	Freq. Yr.	Q C.F.S.	Opening Ft² Exist.	Opening Ft² Prop.	Nat. H.W.E.	Head - Ft. Exist.	Head - Ft. Prop.	Headwater El. Exist.	Headwater El. Prop.
Ten-Year	10	586	1,314	1,316	407.5	0.0	0.0	407.5	407.5
Design	50	962	1,424	1,435	408.5	0.0	0.0	408.5	408.5
Base	100	1,131	1,470	1,483	408.9	0.0	0.0	408.9	408.9
Scour Check	200	1,295	1,517	1,532	409.3	0.0	0.0	409.3	409.3
Max. Calc.	500	1,570	1,602	1,620	410.0	0.0	0.0	410.0	410.0

DESIGN SCOUR ELEVATION TABLE

Event / Limit State	Design Scour Elevations (ft.) W. Abut.	Pier 1	Pier 2	E. Abut.	Item 113
Q100	407.9	385.3	385.3	407.9	5
Q200	407.9	385.2	385.2	407.9	
Design	407.9	385.3	385.3	407.9	
Check	407.9	385.2	385.2	407.9	

STATION 309+50.00
BUILT 202X BY
STATE OF ILLINOIS
SEC. 1-4(B-2)
F.A.S. RT. 331
LOADING HL-93
STR. NO. 100-0107

NAME PLATE

See Std. 515001

INDEX OF SHEETS

GENERAL NOTES

Fasteners shall be ASTM F3125 Grade A325 Type 1. Fasteners shall be hot dip galvanized. See Special Provision for "Hot Dip Galvanizing for Structural Steel." Bolts 7/8 in. diameter, holes 15/16 in. diameter, unless otherwise noted.

Calculated weight of Structural Steel = 180,180 lbs. (AASHTO M270 Grade 50)
19,590 lbs. (AASHTO M270 Grade 36)

All structural Steel shall be galvanized. See Special Provision for "Hot Dip Galvanizing for Structural Steel".

No field welding is permitted except as specified in the contract documents.

Reinforcement bars designated (E) shall be epoxy coated.

The finishing machine rails shall be placed on the top of the top flange of the exterior beams within the deck pour. Beam blocks shall be placed between beams at all tie locations in each bay for the full width of the deck pour.

Bearing seat surfaces shall be constructed or adjusted to the designated elevations within a tolerance of 1/8 inch (0.01 ft.). Adjustment shall be made either by grinding the surface or by shimming the bearings.

All bearing plates, side retainers, anchor bolts, nuts, washers and pintles shall be galvanized according to AASHTO M111 or M232 as applicable.

The Seal Coat design thickness is based on the Cofferdam Design Water Elevation (CDWE) shown. Final cofferdam design, details and seal coat thickness shall be submitted to the Engineer for approval. The CDWE is equal to the Estimated Water Surface Elevation (EWSE) plus three feet.

The existing structural steel coating contains lead. The Contractor shall take appropriate precautions to deal with presence of lead on this project.

Layout of the slope protection system may be varied to suit ground conditions in the field as directed by the Engineer.

Embankment configuration shown shall be the minimum that must be placed and compacted prior to construction of the abutments.

Slipforming of the parapets is not allowed.

TOTAL BILL OF MATERIAL

ITEM	UNIT	SUPER	SUB	TOTAL
Removal of Existing Structures No. 2	Each	-	-	1
Structure Excavation	Cu. Yd.	-	305	305
Cofferdam Excavation	Cu. Yd.	-	592	592
Cofferdam (Type 2) (Location-3)	Each	-	1	1
Cofferdam (Type 2) (Location-4)	Each	-	1	1
Floor Drains	Each	14	-	14
Concrete Structures	Cu. Yd.	-	351.5	351.5
Concrete Superstructure	Cu. Yd.	265.2	-	265.2
Seal Coat Concrete	Cu. Yd.	-	236	236
Protective Coat	Sq. Yd.	1,499	-	1,499
Concrete Superstructure (Approach Slab)	Cu. Yd.	175.9	-	175.9
Furnishing and Erecting Structural Steel	L. Sum	0.25	-	0.25
Stud Shear Connectors	Each	7,080	-	7,080
Reinforcement Bars, Epoxy Coated	Pound	139,260	42,590	181,850
Furnishing Steel Piles HP 14 x 89	Foot	-	2,304	2,304
Driving Piles	Foot	-	2,304	2,304
Test Pile Steel HP 14 x 89	Each	-	4	4
Pile Shoes	Each	-	40	40
Name Plates	Each	1	-	1
Anchor Bolts, 1"	Each	-	80	80
Granular Backfill for Structures	Cu. Yd.	-	225	225
Geocomposite Wall Drain	Sq. Yd.	-	94	94
Pipe Underdrains for Structures 4"	Foot	-	226	226
Bar Terminator	Each	368	604	972
Bridge Deck Grooving (Longitudinal)	Sq. Yd.	1,036	-	1,036
Diamond Grinding (Bridge Section)	Sq. Yd.	1,234	-	1,234

Notes:

Pier and Cofferdam (Type 2) dimensions are typical at all proposed pier locations.

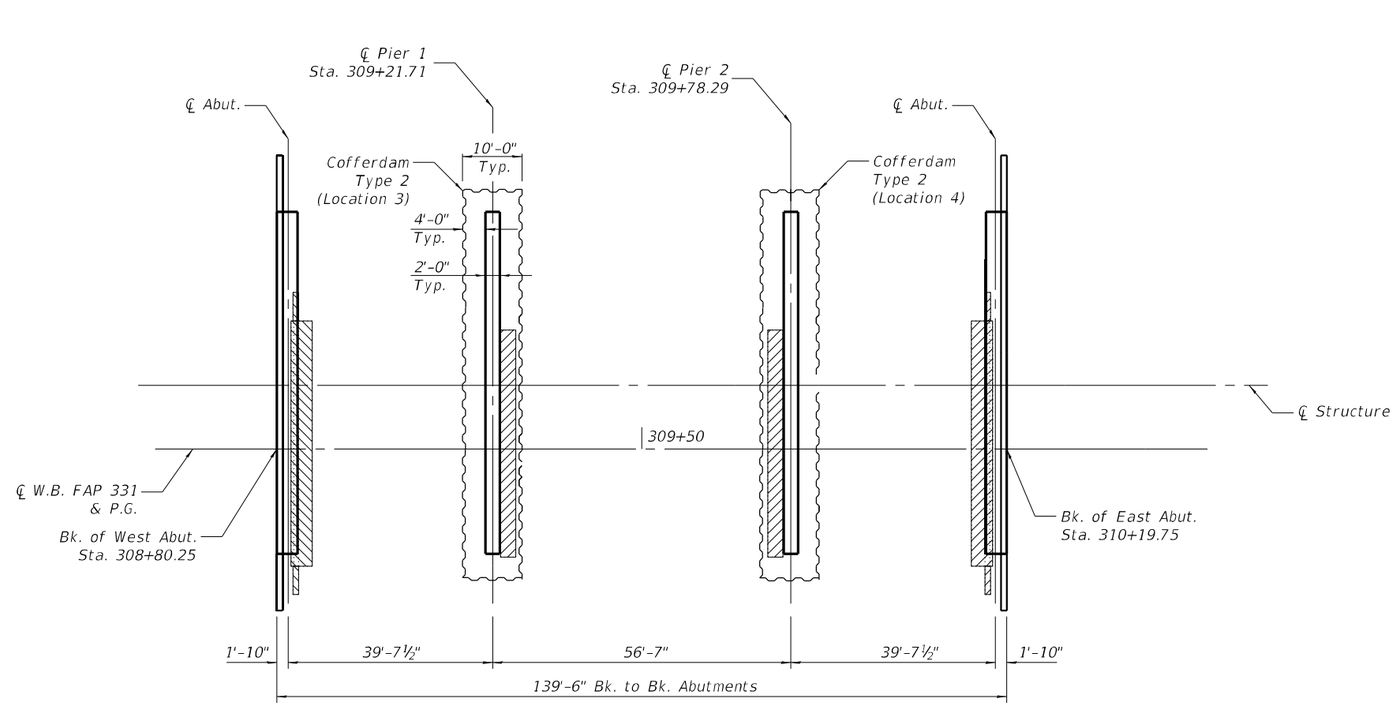

SUBSTRUCTURE LAYOUT

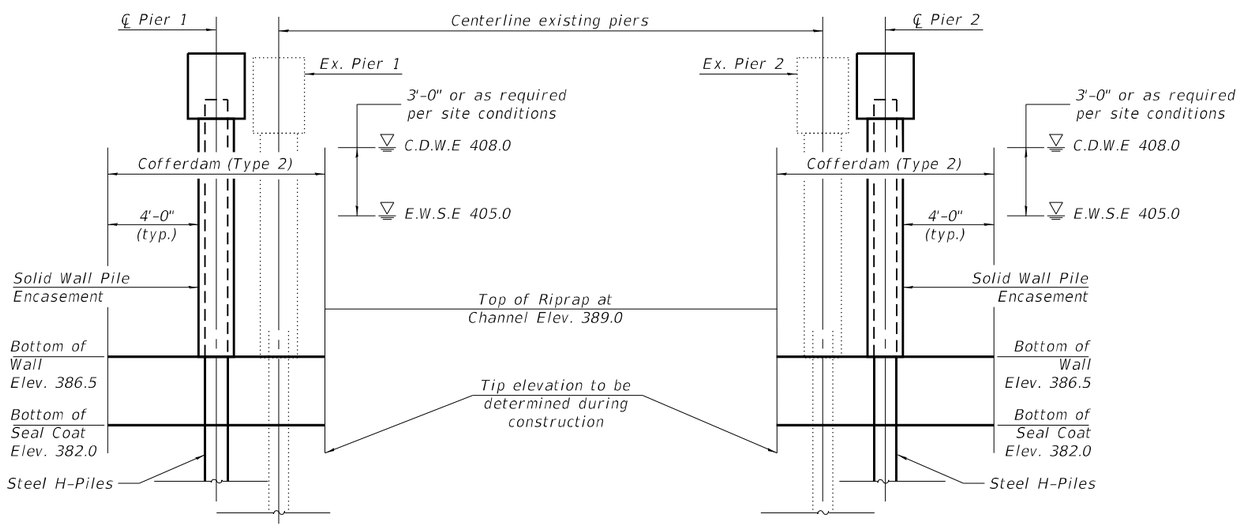

Section thru Pier 1

Section thru Pier 2

COFFERDAM DETAILS

(Horiz. dim. @ Rt. ∠'s)

MODEL: Default
FILE NAME: P:\5XXX\50XX-51XX\5000 - IDOT PTB 200-038 D9 IL 13 Crab Orchard Bridges\24-Structures\CAD-MS\100-0107-78373-003-Substructure Layout.dgn
3/11/2025 6:05:40 AM

CIVIL DESIGN, INC.
WBE / DBE
EFFINGHAM, IL
LICENSE #184.003222

USER NAME =	DESIGNED – JAG	REVISED –	
	CHECKED – JGS	REVISED –	
PLOT SCALE =	DRAWN – JAG	REVISED –	
PLOT DATE =	CHECKED – JGS	REVISED –	

STATE OF ILLINOIS
DEPARTMENT OF TRANSPORTATION

SUBSTRUCTURE LAYOUT
STRUCTURE NO. 100-0107

SHEET 3 OF 28 SHEETS

F.A.P. RTE.	SECTION	COUNTY	TOTAL SHEETS	SHEET NO.
331	(1-4)R-5,RS-2,B-1,B-2,B-3,B-4	WILLIAMSON	519	249
		CONTRACT NO. 78373		
		ILLINOIS FED. AID PROJECT		

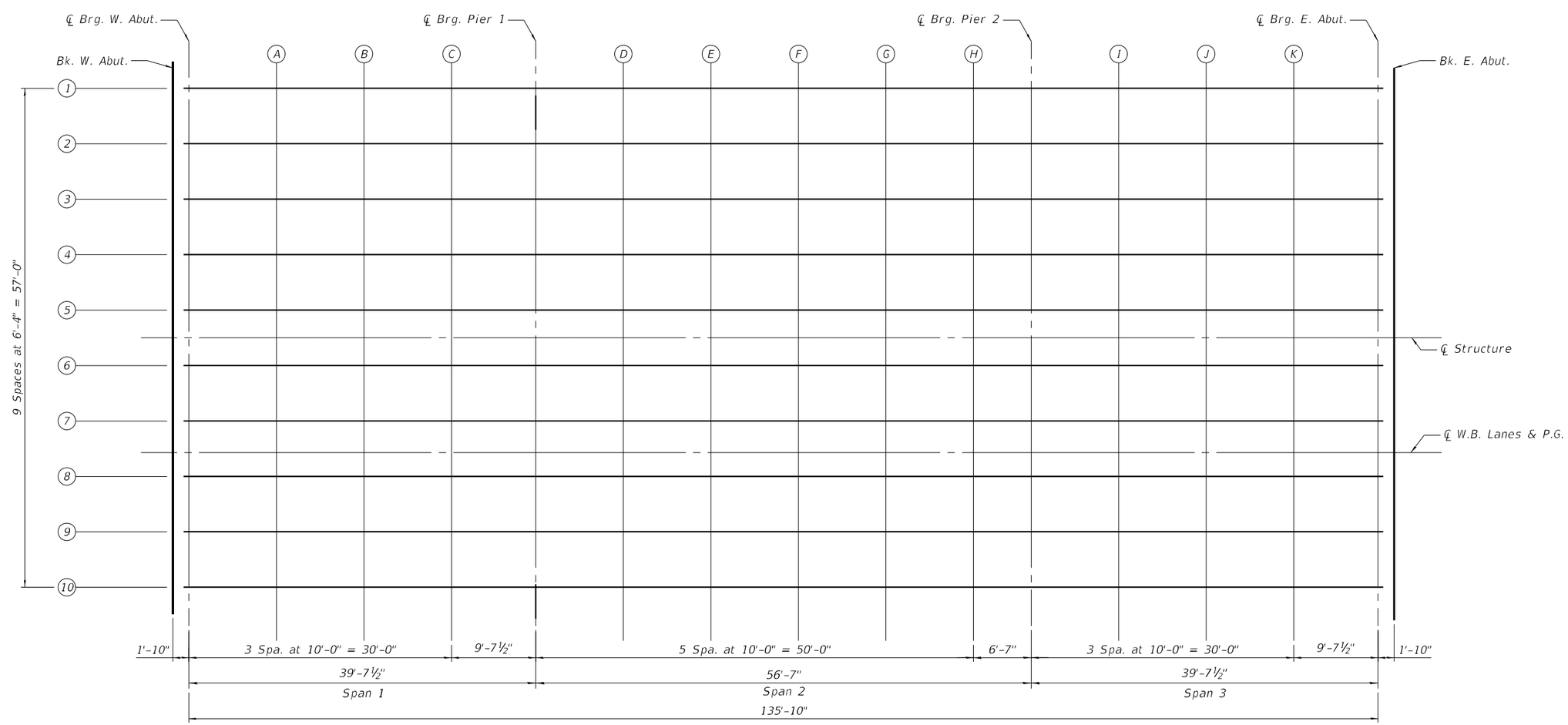

PLAN

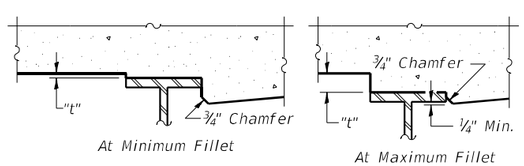

To determine "t": After all structural steel has been erected, elevations of the top flanges of the beams shall be taken at intervals shown above. These elevations subtracted from the "Theoretical Grade Elevations Adjusted for Dead Load Deflection and Grinding" shown below, minus the initial slab thickness prior to grinding, equals the fillet heights "t" above top flange of beams.

The slab is to be ground after curing to achieve smoothness, but the slab is not to be ground to elevations below the "Theoretical Grade Elevations" shown above. For grinding the deck, see Special Provisions.

See sheets 5 & 6 of 28 for Top of Slab Elevations.

FILLET HEIGHTS

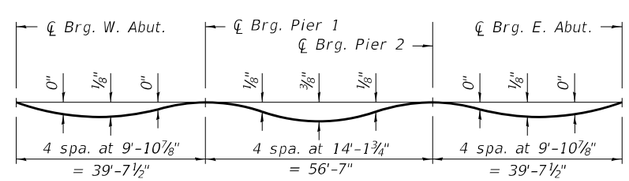

DEAD LOAD DEFLECTION DIAGRAM

(Includes weight of concrete only.)

Note:

The above deflections are not to be used in the field if the engineer is working from the grade elevations adjusted for dead load deflections and grinding as shown above.

See sheets 5 & 6 of 28 for Top of Slab Elevations.

MODEL: Default
FILE NAME: P:\5XXX\50XX-51XX\5000 - IDOT PTB 200-038 D9 IL 13 Crab Orchard Bridges\24-Structures\CAD-MS\100-0107-78373-004-TOS Elev. Layout.dgn
3/11/2025 6:06:12 AM

CDI CIVIL DESIGN, INC. WBE / DBE EFFINGHAM, IL LICENSE #184.003222	USER NAME =	DESIGNED – JAG	REVISED –	STATE OF ILLINOIS DEPARTMENT OF TRANSPORTATION	TOP OF SLAB ELEVATIONS LAYOUT STRUCTURE NO. 100-0107
		CHECKED – JGS	REVISED –		
	PLOT SCALE =	DRAWN – JAG	REVISED –		
	PLOT DATE =	CHECKED – JGS	REVISED –		SHEET 4 OF 28 SHEETS

F.A.P. RTE.	SECTION	COUNTY	TOTAL SHEETS	SHEET NO.
331	(1-4)R-5,RS-2,B-1,B-2,B-3,B-4	WILLIAMSON	519	250
		CONTRACT NO. 78373		
		ILLINOIS	FED. AID PROJECT	

BEAM 1

Location	Station	Offset	Theoretical Grade Elevations	Theoretical Grade Elevations Adjusted For Dead Load Deflection and Grinding
Bk. of W. Abut.	308+80.25	-41.63	414.64	414.66
℄ Brg. W. Abut.	308+82.08	-41.63	414.64	414.66
A	308+92.08	-41.63	414.65	414.68
B	309+02.08	-41.63	414.66	414.68
C	309+12.08	-41.63	414.67	414.68
℄ Brg. Pier 1	309+21.71	-41.63	414.67	414.69
D	309+31.71	-41.63	414.67	414.71
E	309+41.71	-41.63	414.68	414.73
F	309+51.71	-41.63	414.68	414.73
G	309+61.71	-41.63	414.68	414.72
H	309+71.71	-41.63	414.68	414.71
℄ Brg. Pier 2	309+78.29	-41.63	414.68	414.70
I	309+88.29	-41.63	414.68	414.70
J	309+98.29	-41.63	414.67	414.70
K	310+08.29	-41.63	414.67	414.70
℄ Brg. E. Abut.	310+17.91	-41.63	414.67	414.69
Bk. of E. Abut.	310+19.75	-41.63	414.66	414.68

BEAM 2

Location	Station	Offset	Theoretical Grade Elevations	Theoretical Grade Elevations Adjusted For Dead Load Deflection and Grinding
Bk. of W. Abut.	308+80.25	-35.29	414.76	414.78
℄ Brg. W. Abut.	308+82.08	-35.29	414.77	414.79
A	308+92.08	-35.29	414.77	414.80
B	309+02.08	-35.29	414.78	414.81
C	309+12.08	-35.29	414.79	414.81
℄ Brg. Pier 1	309+21.71	-35.29	414.79	414.81
D	309+31.71	-35.29	414.80	414.83
E	309+41.71	-35.29	414.80	414.85
F	309+51.71	-35.29	414.80	414.86
G	309+61.71	-35.29	414.81	414.85
H	309+71.71	-35.29	414.81	414.83
℄ Brg. Pier 2	309+78.29	-35.29	414.81	414.83
I	309+88.29	-35.29	414.80	414.83
J	309+98.29	-35.29	414.80	414.83
K	310+08.29	-35.29	414.80	414.83
℄ Brg. E. Abut.	310+17.91	-35.29	414.79	414.81
Bk. of E. Abut.	310+19.75	-35.29	414.79	414.81

BEAM 3

Location	Station	Offset	Theoretical Grade Elevations	Theoretical Grade Elevations Adjusted For Dead Load Deflection and Grinding
Bk. of W. Abut.	308+80.25	-28.96	414.89	414.91
℄ Brg. W. Abut.	308+82.08	-28.96	414.89	414.91
A	308+92.08	-28.96	414.90	414.93
B	309+02.08	-28.96	414.91	414.94
C	309+12.08	-28.96	414.92	414.94
℄ Brg. Pier 1	309+21.71	-28.96	414.92	414.94
D	309+31.71	-28.96	414.93	414.96
E	309+41.71	-28.96	414.93	414.98
F	309+51.71	-28.96	414.93	414.99
G	309+61.71	-28.96	414.93	414.98
H	309+71.71	-28.96	414.93	414.96
℄ Brg. Pier 2	309+78.29	-28.96	414.93	414.95
I	309+88.29	-28.96	414.93	414.95
J	309+98.29	-28.96	414.93	414.95
K	310+08.29	-28.96	414.92	414.95
℄ Brg. E. Abut.	310+17.91	-28.96	414.92	414.94
Bk. of E. Abut.	310+19.75	-28.96	414.92	414.94

BEAM 4

Location	Station	Offset	Theoretical Grade Elevations	Theoretical Grade Elevations Adjusted For Dead Load Deflection and Grinding
Bk. of W. Abut.	308+80.25	-22.63	415.02	415.04
℄ Brg. W. Abut.	308+82.08	-22.63	415.02	415.04
A	308+92.08	-22.63	415.03	415.06
B	309+02.08	-22.63	415.04	415.06
C	309+12.08	-22.63	415.04	415.06
℄ Brg. Pier 1	309+21.71	-22.63	415.05	415.07
D	309+31.71	-22.63	414.05	415.09
E	309+41.71	-22.63	415.06	415.11
F	309+51.71	-22.63	415.06	415.11
G	309+61.71	-22.63	415.06	415.10
H	309+71.71	-22.63	415.06	415.09
℄ Brg. Pier 2	309+78.29	-22.63	415.06	415.08
I	309+88.29	-22.63	415.06	415.08
J	309+98.29	-22.63	415.05	415.08
K	310+08.29	-22.63	415.05	415.08
℄ Brg. E. Abut.	310+17.91	-22.63	415.05	415.07
Bk. of E. Abut.	310+19.75	-22.63	415.04	415.06

BEAM 5

Location	Station	Offset	Theoretical Grade Elevations	Theoretical Grade Elevations Adjusted For Dead Load Deflection and Grinding
Bk. of W. Abut.	308+80.25	-16.29	415.14	415.16
℄ Brg. W. Abut.	308+82.08	-16.29	415.15	415.17
A	308+92.08	-16.29	415.15	415.18
B	309+02.08	-16.29	415.16	415.19
C	309+12.08	-16.29	415.17	415.19
℄ Brg. Pier 1	309+21.71	-16.29	415.17	415.19
D	309+31.71	-16.29	415.18	415.21
E	309+41.71	-16.29	415.18	415.23
F	309+51.71	-16.29	415.18	415.24
G	309+61.71	-16.29	415.19	415.23
H	309+71.71	-16.29	415.19	415.21
℄ Brg. Pier 2	309+78.29	-16.29	415.19	415.21
I	309+88.29	-16.29	415.18	415.21
J	309+98.29	-16.29	415.18	415.21
K	310+08.29	-16.29	415.18	415.21
℄ Brg. E. Abut.	310+17.91	-16.29	415.17	415.19
Bk. of E. Abut.	310+19.75	-16.29	415.17	415.19

℄ STRUCTURE

Location	Station	Offset	Theoretical Grade Elevations	Theoretical Grade Elevations Adjusted For Dead Load Deflection and Grinding
Bk. of W. Abut.	308+80.25	-13.13	415.20	415.23
℄ Brg. W. Abut.	308+82.08	-13.13	415.21	415.23
A	308+92.08	-13.13	415.21	415.24
B	309+02.08	-13.13	415.22	415.25
C	309+12.08	-13.13	415.23	415.25
℄ Brg. Pier 1	309+21.71	-13.13	415.23	415.26
D	309+31.71	-13.13	415.24	415.27
E	309+41.71	-13.13	415.24	415.29
F	309+51.71	-13.13	415.25	415.30
G	309+61.71	-13.13	415.25	415.29
H	309+71.71	-13.13	415.25	415.28
℄ Brg. Pier 2	309+78.29	-13.13	415.25	415.27
I	309+88.29	-13.13	415.24	415.27
J	309+98.29	-13.13	415.24	415.27
K	310+08.29	-13.13	415.24	415.27
℄ Brg. E. Abut.	310+17.91	-13.13	415.23	415.25
Bk. of E. Abut.	310+19.75	-13.13	415.23	415.25

BEAM 6

Location	Station	Offset	Theoretical Grade Elevations	Theoretical Grade Elevations Adjusted For Dead Load Deflection and Grinding
Bk. of W. Abut.	308+80.25	-9.96	415.26	415.29
℄ Brg. W. Abut.	308+82.08	-9.96	415.27	415.29
A	308+92.08	-9.96	415.28	415.30
B	309+02.08	-9.96	415.28	415.31
C	309+12.08	-9.96	415.29	415.31
℄ Brg. Pier 1	309+21.71	-9.96	415.30	415.32
D	309+31.71	-9.96	415.30	415.33
E	309+41.71	-9.96	415.30	415.35
F	309+51.71	-9.96	415.31	415.36
G	309+61.71	-9.96	415.31	415.35
H	309+71.71	-9.96	415.31	415.34
℄ Brg. Pier 2	309+78.29	-9.96	415.31	415.33
I	309+88.29	-9.96	414.31	415.33
J	309+98.29	-9.96	415.30	415.33
K	310+08.29	-9.96	415.30	415.33
℄ Brg. E. Abut.	310+17.91	-9.96	415.29	415.31
Bk. of E. Abut.	310+19.75	-9.96	415.29	415.31

BEAM 7

Location	Station	Offset	Theoretical Grade Elevations	Theoretical Grade Elevations Adjusted For Dead Load Deflection and Grinding
Bk. of W. Abut.	308+80.25	-3.63	415.36	415.38
℄ Brg. W. Abut.	308+82.08	-3.63	415.36	415.38
A	308+92.08	-3.63	415.37	415.40
B	309+02.08	-3.63	415.38	415.41
C	309+12.08	-3.63	415.39	415.41
℄ Brg. Pier 1	309+21.71	-3.63	415.39	415.41
D	309+31.71	-3.63	415.40	415.43
E	309+41.71	-3.63	415.40	414.45
F	309+51.71	-3.63	415.40	415.46
G	309+61.71	-3.63	415.40	414.45
H	309+71.71	-3.63	415.40	415.43
℄ Brg. Pier 2	309+78.29	-3.63	415.40	415.42
I	309+88.29	-3.63	415.40	415.42
J	309+98.29	-3.63	415.40	415.42
K	310+08.29	-3.63	415.39	415.42
℄ Brg. E. Abut.	310+17.91	-3.63	415.39	415.41
Bk. of E. Abut.	310+19.75	-3.63	415.39	415.41

℄ W.B. LANES & P.G.

Location	Station	Offset	Theoretical Grade Elevations	Theoretical Grade Elevations Adjusted For Dead Load Deflection and Grinding
Bk. of W. Abut.	308+80.25	0.00	415.41	415.44
℄ Brg. W. Abut.	308+82.08	0.00	415.42	415.44
A	308+92.08	0.00	415.42	415.45
B	309+02.08	0.00	415.43	415.46
C	309+12.08	0.00	415.44	415.46
℄ Brg. Pier 1	309+21.71	0.00	415.44	415.47
D	309+31.71	0.00	415.45	415.48
E	309+41.71	0.00	415.45	415.50
F	309+51.71	0.00	415.46	415.51
G	309+61.71	0.00	415.46	415.50
H	309+71.71	0.00	415.46	415.49
℄ Brg. Pier 2	309+78.29	0.00	415.46	415.48
I	309+88.29	0.00	415.45	415.48
J	309+98.29	0.00	415.45	415.48
K	310+08.29	0.00	415.45	415.48
℄ Brg. E. Abut.	310+17.91	0.00	415.44	415.46
Bk. of E. Abut.	310+19.75	0.00	415.44	415.46

BEAM 8

Location	Station	Offset	Theoretical Grade Elevations	Theoretical Grade Elevations Adjusted For Dead Load Deflection and Grinding
Bk. of W. Abut.	308+80.25	2.71	415.37	415.39
℄ Brg. W. Abut.	308+82.08	2.71	415.38	415.40
A	308+92.08	2.71	415.38	415.41
B	309+02.08	2.71	415.39	415.42
C	309+12.08	2.71	415.40	415.42
℄ Brg. Pier 1	309+21.71	2.71	415.40	415.43
D	309+31.71	2.71	415.41	415.44
E	309+41.71	2.71	415.41	415.46
F	309+51.71	2.71	415.41	415.47
G	309+61.71	2.71	415.42	415.46
H	309+71.71	2.71	415.42	415.44
℄ Brg. Pier 2	309+78.29	2.71	415.42	415.44
I	309+88.29	2.71	415.41	415.44
J	309+98.29	2.71	415.41	415.44
K	310+08.29	2.71	415.41	415.44
℄ Brg. E. Abut.	310+17.91	2.71	415.40	415.42
Bk. of E. Abut.	310+19.75	2.71	415.40	415.42

BEAM 9

Location	Station	Offset	Theoretical Grade Elevations	Theoretical Grade Elevations Adjusted For Dead Load Deflection and Grinding
Bk. of W. Abut.	308+80.25	9.04	415.28	415.30
℄ Brg. W. Abut.	308+82.08	9.04	415.28	415.30
A	308+92.08	9.04	415.29	415.32
B	309+02.08	9.04	415.30	415.33
C	309+12.08	9.04	415.30	415.33
℄ Brg. Pier 1	309+21.71	9.04	415.31	415.33
D	309+31.71	9.04	415.31	415.35
E	309+41.71	9.04	415.32	415.37
F	309+51.71	9.04	415.32	415.37
G	309+61.71	9.04	415.32	415.37
H	309+71.71	9.04	415.32	415.35
℄ Brg. Pier 2	309+78.29	9.04	415.32	415.34
I	309+88.29	9.04	415.32	415.34
J	309+98.29	9.04	415.32	415.34
K	310+08.29	9.04	415.31	415.34
℄ Brg. E. Abut.	310+17.91	9.04	415.31	415.33
Bk. of E. Abut.	310+19.75	9.04	415.31	415.33

BEAM 10

Location	Station	Offset	Theoretical Grade Elevations	Theoretical Grade Elevations Adjusted For Dead Load Deflection and Grinding
Bk. of W. Abut.	308+80.25	15.38	415.16	415.18
℄ Brg. W. Abut.	308+82.08	15.38	415.16	415.18
A	308+92.08	15.38	415.17	415.20
B	309+02.08	15.38	415.18	415.21
C	309+12.08	15.38	415.19	415.21
℄ Brg. Pier 1	309+21.71	15.38	415.19	415.21
D	309+31.71	15.38	415.20	415.23
E	309+41.71	15.38	415.20	415.25
F	309+51.71	15.38	415.20	415.26
G	309+61.71	15.38	415.20	415.25
H	309+71.71	15.38	415.20	415.23
℄ Brg. Pier 2	309+78.29	15.38	415.20	415.22
I	309+88.29	15.38	415.20	415.22
J	309+98.29	15.38	415.20	415.23
K	310+08.29	15.38	415.20	415.22
℄ Brg. E. Abut.	310+17.91	15.38	415.19	415.21
Bk. of E. Abut.	310+19.75	15.38	415.19	415.21

NORTH EDGE OF SHOULDER

Location	Station	Offset	Theoretical Grade Elevations	Theoretical Grade Elevations Adjusted For Grinding
W. End West Appr. Slab	308+51.25	-41.31	414.61	414.63
A1	308+61.25	-41.31	414.62	414.64
A2	308+71.25	-41.31	414.63	414.65
E. End West Appr. Slab	308+81.25	-41.31	414.64	414.66

NORTH EDGE OF PAVEMENT

Location	Station	Offset	Theoretical Grade Elevations	Theoretical Grade Elevations Adjusted For Grinding
W. End West Appr. Slab	308+51.25	-35.26	414.73	414.75
A1	308+61.25	-35.26	414.74	414.76
A2	308+71.25	-35.26	414.76	414.78
E. End West Appr. Slab	308+81.25	-35.26	414.77	414.79

℄ W.B. IL 13 & P.G.

Location	Station	Offset	Theoretical Grade Elevations	Theoretical Grade Elevations Adjusted For Grinding
W. End West Appr. Slab	308+51.25	0.00	415.38	415.40
A1	308+61.25	0.00	415.39	415.41
A2	308+71.25	0.00	415.41	415.43
E. End West Appr. Slab	308+81.25	0.00	415.42	415.44

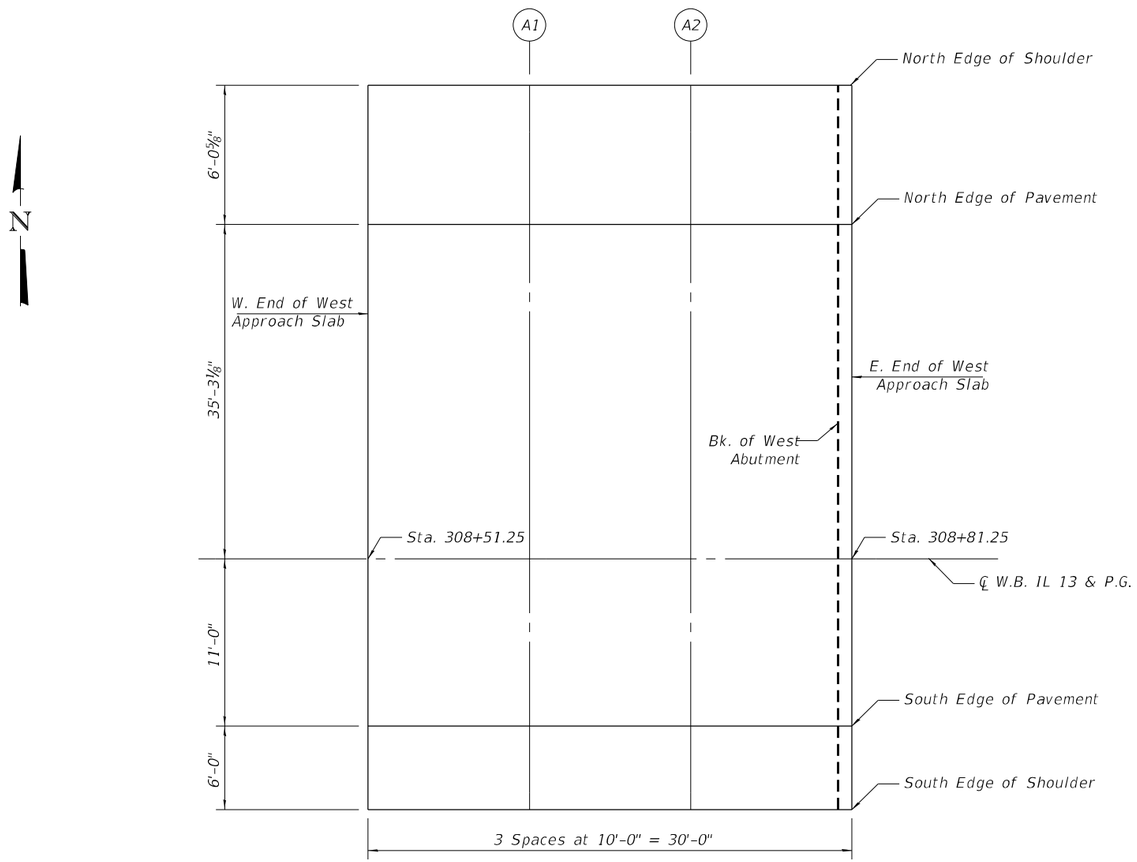

PLAN
(West Approach)

SOUTH EDGE OF PAVEMENT

Location	Station	Offset	Theoretical Grade Elevations	Theoretical Grade Elevations Adjusted For Grinding
W. End West Appr. Slab	308+51.25	11.00	415.22	415.24
A1	308+61.25	11.00	415.23	415.25
A2	308+71.25	11.00	415.24	415.26
E. End West Appr. Slab	308+81.25	11.00	415.25	415.27

SOUTH EDGE OF SHOULDER

Location	Station	Offset	Theoretical Grade Elevations	Theoretical Grade Elevations Adjusted For Grinding
W. End West Appr. Slab	308+51.25	17.00	415.10	415.12
A1	308+61.25	17.00	415.11	415.13
A2	308+71.25	17.00	415.12	415.14
E. End West Appr. Slab	308+81.25	17.00	415.13	415.15

E-AS1 2-17-2017

NORTH EDGE OF SHOULDER

Location	Station	Offset	Theoretical Grade Elevations	Theoretical Grade Elevations Adjusted For Grinding
W. End East Appr. Slab	310+18.75	-45.12	414.60	414.62
A3	310+28.75	-45.12	414.59	414.61
A4	310+38.75	-45.12	414.58	414.60
E. End East Appr. Slab	310+48.75	-45.12	414.57	414.59

NORTH EDGE OF PAVEMENT

Location	Station	Offset	Theoretical Grade Elevations	Theoretical Grade Elevations Adjusted For Grinding
W. End East Appr. Slab	310+18.75	-37.20	414.75	414.77
A3	310+28.75	-37.20	414.75	414.77
A4	310+38.75	-37.20	414.74	414.76
E. End East Appr. Slab	310+48.75	-37.20	414.73	414.75

℄ W.B. IL 13 & P.G.

Location	Station	Offset	Theoretical Grade Elevations	Theoretical Grade Elevations Adjusted For Grinding
W. End East Appr. Slab	310+18.75	0.00	415.44	415.46
A3	310+28.75	0.00	415.44	415.46
A4	310+38.75	0.00	415.43	415.45
E. End East Appr. Slab	310+48.75	0.00	415.42	415.44

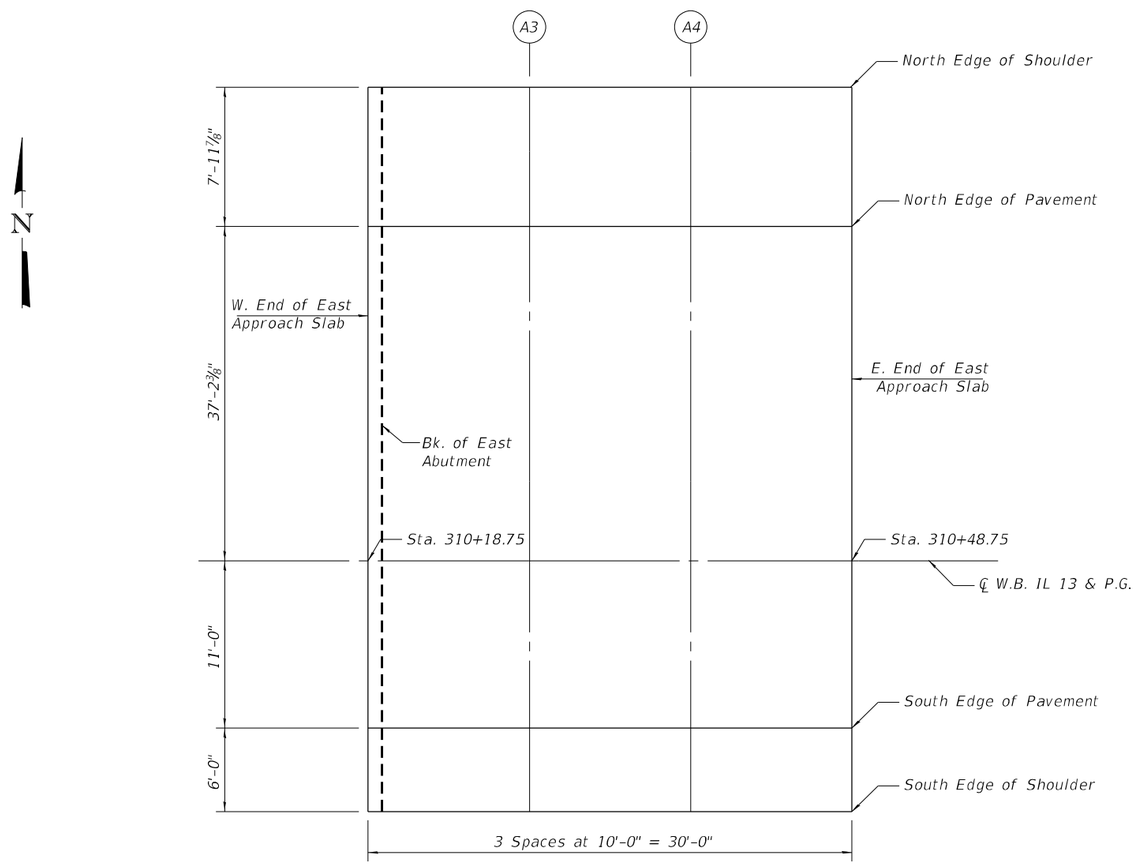

PLAN
(East Approach)

SOUTH EDGE OF PAVEMENT

Location	Station	Offset	Theoretical Grade Elevations	Theoretical Grade Elevations Adjusted For Grinding
W. End East Appr. Slab	310+18.75	11.00	415.28	415.30
A3	310+28.75	11.00	415.27	415.29
A4	310+38.75	11.00	415.26	415.28
E. End East Appr. Slab	310+48.75	11.00	415.26	415.28

SOUTH EDGE OF SHOULDER

Location	Station	Offset	Theoretical Grade Elevations	Theoretical Grade Elevations Adjusted For Grinding
W. End East Appr. Slab	310+18.75	17.00	415.16	415.18
A3	310+28.75	17.00	415.15	415.17
A4	310+38.75	17.00	415.14	415.16
E. End East Appr. Slab	310+48.75	17.00	415.14	415.16

E-AS1 2-17-2017

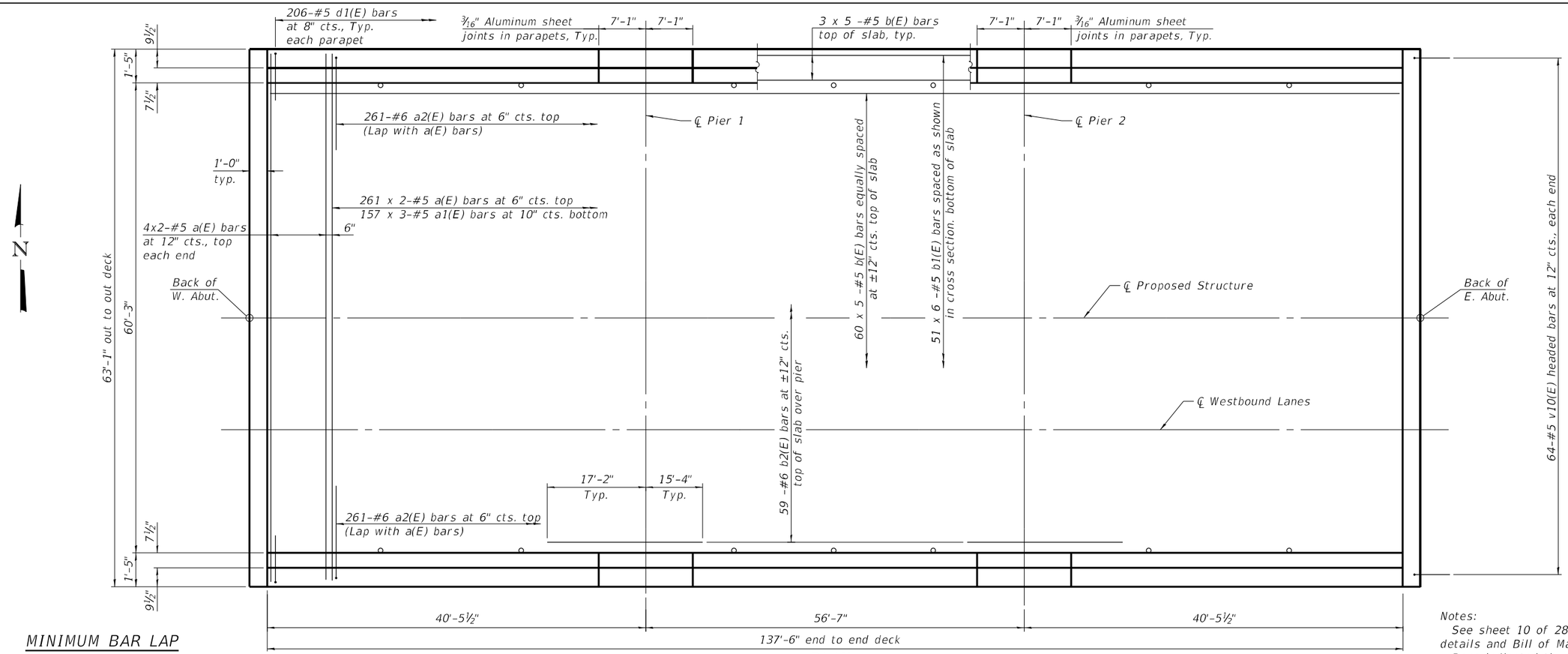

PLAN

MINIMUM BAR LAP

#5 bar = 3'-6"
#6 bar = 3'-7"

Notes:
See sheet 10 of 28 for superstructure details and Bill of Material.
Bars indicated thus 20 x 3-#5 etc. indicates 20 lines of bars with 3 lengths per line.

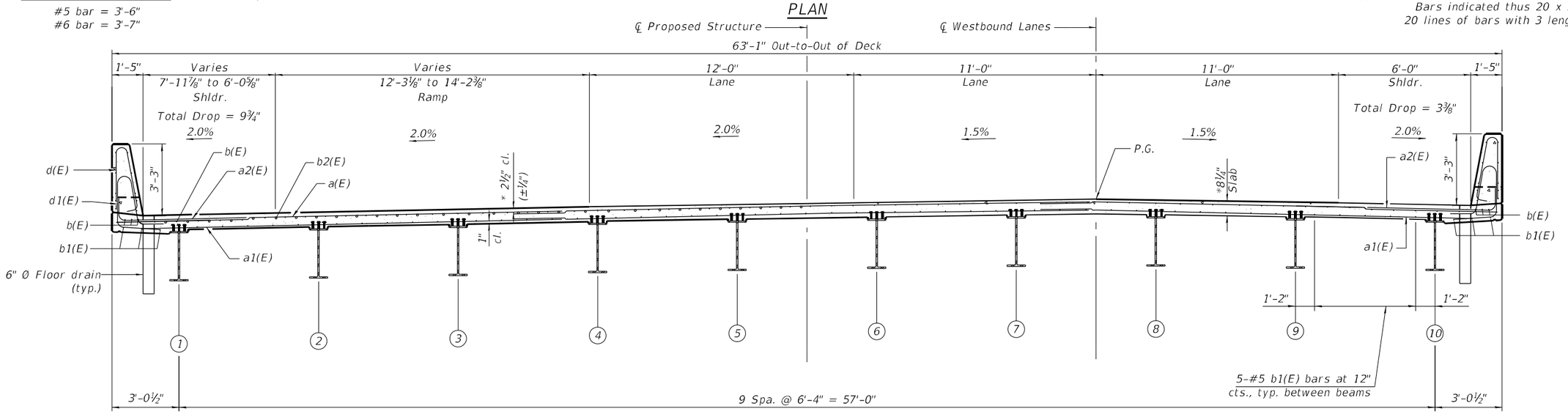

CROSS SECTION

(Looking East)
* Prior to grinding

NEAR PIER

NEAR MIDSPAN

MODEL: Default
FILE NAME: P:\5XXX50XX-51XX\5000 - IDOT PTB 200-038 D9 IL 13 Crab Orchard Bridges\24-Structures\CAD-MS\100-0107-78373-009-Superstructure Plan.dgn
3/11/2025 6:08:13 AM

CDI CIVIL DESIGN, INC. WBE / DBE EFFINGHAM, IL LICENSE #184.003222

USER NAME =	DESIGNED – JAG	REVISED –	
	CHECKED – JGS	REVISED –	
PLOT SCALE =	DRAWN – JAG	REVISED –	
PLOT DATE =	CHECKED – JGS	REVISED –	

STATE OF ILLINOIS
DEPARTMENT OF TRANSPORTATION

SUPERSTRUCTURE PLAN
STRUCTURE NO. 100-0107

SHEET 9 OF 28 SHEETS

F.A.P. RTE.	SECTION	COUNTY	TOTAL SHEETS	SHEET NO.
331	(1-4)R-5,RS-2,B-1,B-2,B-3,B-4	WILLIAMSON	519	255
		CONTRACT NO. 78373		
		ILLINOIS FED. AID PROJECT		

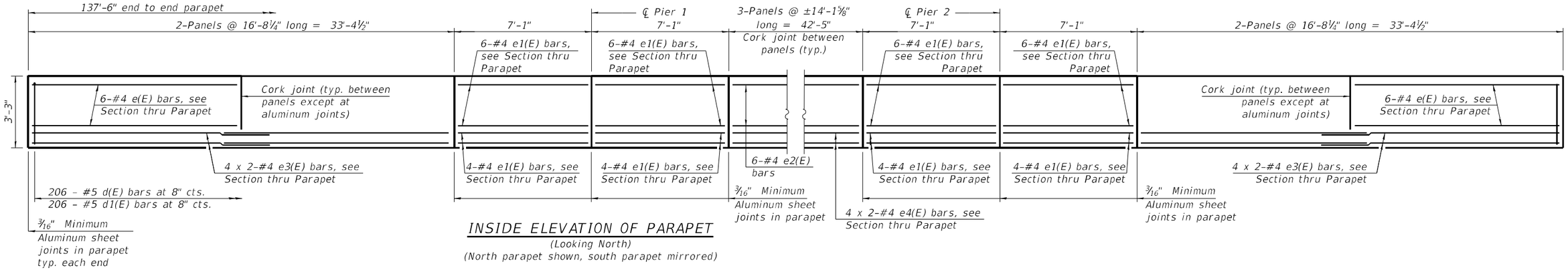

INSIDE ELEVATION OF PARAPET

(Looking North)
(North parapet shown, south parapet mirrored)

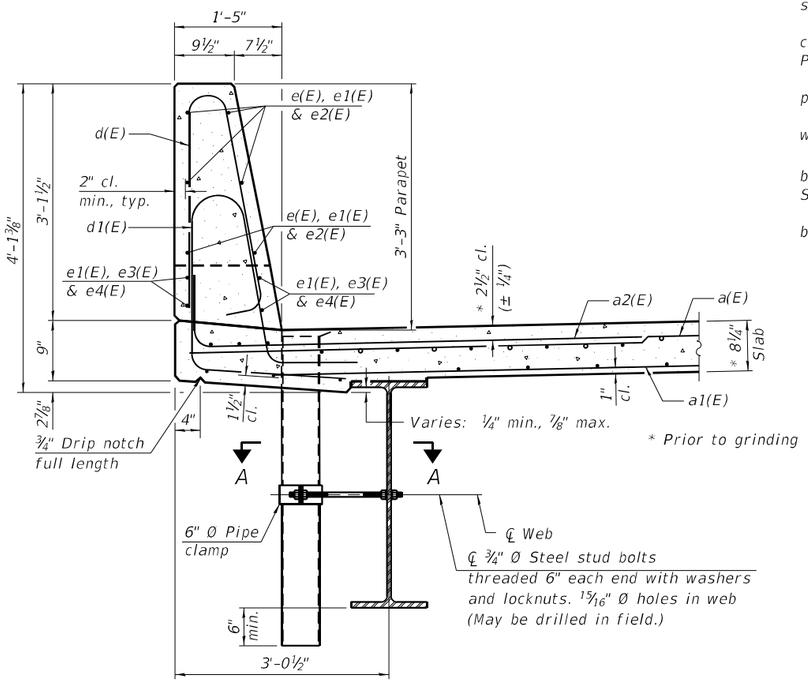

SECTION THRU PARAPET

Notes:

Fiberglass pipe shall conform to ASTM D2996, with short-time rupture strength hoop tensile stress of 30,000 p.s.i. minimum.

The exterior surfaces of the floor drains shall be painted according to Article 506 with the finish coat as specified. The exterior surfaces of the drains shall be cleaned according to the Society of Protective Coating's Spec. SSPC-SP1 prior to painting.

The top portion of aluminum floor drains shall be coated with 5 mils of either bitumen paint or epoxy paint to minimize reaction with wet concrete.

The clamping device shall be galvanized according to AASHTO M 232. Cost of clamping device included with Floor Drains.

The 3/16" Min. aluminum sheet shall be ASTM B 209 alloy 3003-H14 and coated with 5 mils of either bitumen paint or epoxy paint to minimize reaction with wet concrete. Cost included with Concrete Superstructure.

The polyurethane sealant shall be according to Article 1050.04 of the Std. Spec. and the color shall be gray.

Bar terminators paid for separately. See Total Bill of Material.

MINIMUM BAR LAP

#4 bar = 2'-5"

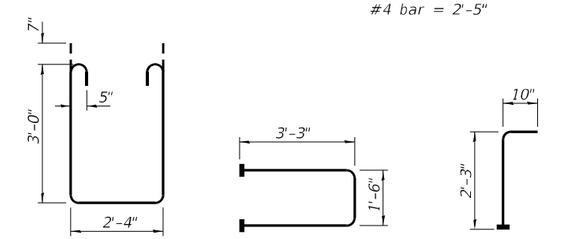

BAR s11(E) | BAR s10(E) (Headed. 240-#5 Bar terminators) | BAR v10(E) (Headed. 128-#5 Bar terminators)

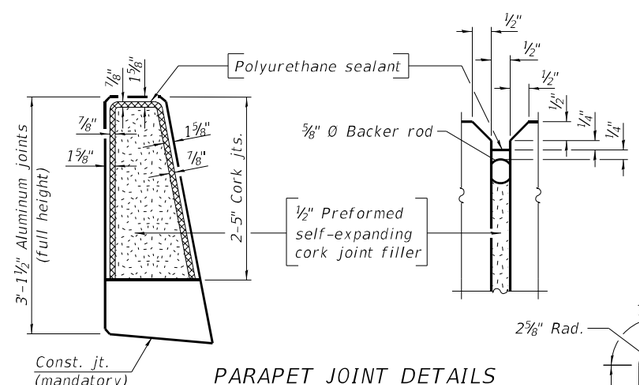

PARAPET JOINT DETAILS

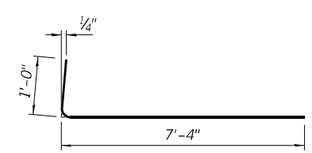

BAR a2(E)

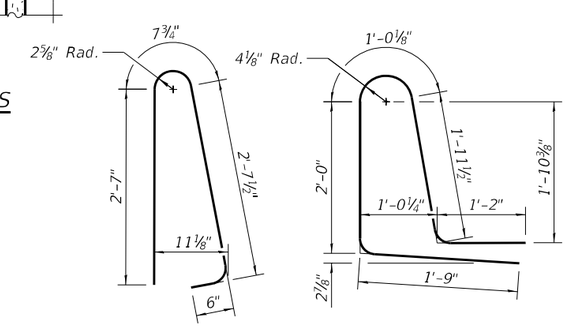

BAR d(E) | BAR d1(E)

SUPERSTRUCTURE BILL OF MATERIAL

Bar	No.	Size	Length	Shape
a(E)	538	#5	33'-2"	
a1(E)	471	#5	23'-5"	
a2(E)	522	#6	8'-4"	
b(E)	330	#5	30'-3"	
b1(E)	306	#5	26'-5"	
b2(E)	118	#6	32'-6"	
d(E)	412	#5	7'-0"	
d1(E)	412	#5	7'-11"	
e(E)	48	#4	16'-10"	
e1(E)	80	#4	6'-9"	
e2(E)	36	#4	13'-9"	
e3(E)	32	#4	17'-9"	
e4(E)	16	#4	23'-0"	
m10(E)	12	#6	32'-4"	
m11(E)	54	#6	6'-0"	
m12(E)	12	#6	2'-8"	
s10(E)	120	#5	8'-0"	
s11(E)	120	#5	9'-6"	
v10(E)	128	#5	3'-1"	
Concrete Superstructure			Cu. Yd.	257.4
Reinforcement Bars, Epoxy Coated			Pound	73,240

MODEL: Default
FILE NAME: P:\5XXX\50XX-51XX\5000 - IDOT PTB 200-038 D9 IL 13 Crab Orchard Bridges\24-Structures\CAD-MS\100-0107-78373-010-Superstructure Details 1.dgn
3/11/2025 6:08:36 AM

CDI CIVIL DESIGN, INC. WBE / DBE EFFINGHAM, IL LICENSE #184.003222

USER NAME =	DESIGNED - JAG	REVISED -	
	CHECKED - JGS	REVISED -	
PLOT SCALE =	DRAWN - JAG	REVISED -	
PLOT DATE =	CHECKED - JGS	REVISED -	

STATE OF ILLINOIS
DEPARTMENT OF TRANSPORTATION

SUPERSTRUCTURE DETAILS 1
STRUCTURE NO. 100-0107
SHEET 10 OF 28 SHEETS

F.A.P. RTE.	SECTION	COUNTY	TOTAL SHEETS	SHEET NO.
331	(1-4)R-5,RS-2,B-1,B-2,B-3,B-4	WILLIAMSON	519	256
		CONTRACT NO. 78373		
		ILLINOIS	FED. AID PROJECT	

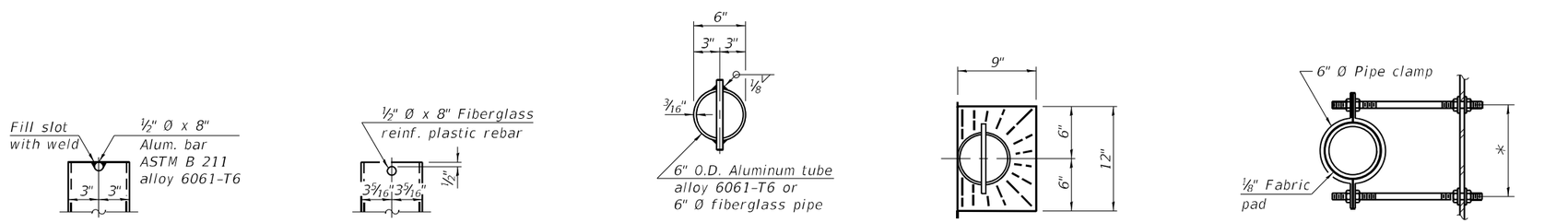

ALUMINUM TUBE

FIBERGLASS PIPE

TOP PLAN
(Showing aluminum tube)

TOP PLAN

SECTION A-A
*Dimension as required by pipe clamp

MODEL: Default
FILE NAME: P:\XXX\50XX-51XX\5000 - IDOT PTB 200-038 D9 IL 13 Crab Orchard Bridges\24-Structures\CAD-MS\100-0107-78373-011-Superstructure Details 2.dgn

CIVIL DESIGN, INC. WBE | DBE EFFINGHAM, IL LICENSE #184.003222	USER NAME =	DESIGNED – JAG	REVISED –	STATE OF ILLINOIS DEPARTMENT OF TRANSPORTATION	SUPERSTRUCTURE DETAILS 2 STRUCTURE NO. 100-0107	F.A.P. RTE.	SECTION	COUNTY	TOTAL SHEETS / SHEET NO.
		CHECKED – JGS	REVISED –			331	(1-4)R-5,RS-2,B-1,B-2,B-3,B-4	WILLIAMSON	519 / 257
	PLOT SCALE =	DRAWN – JAG	REVISED –					CONTRACT NO. 78373	
	PLOT DATE =	CHECKED – JGS	REVISED –		SHEET 11 OF 28 SHEETS		ILLINOIS	FED. AID PROJECT	

3/11/2025 6:09:00 AM

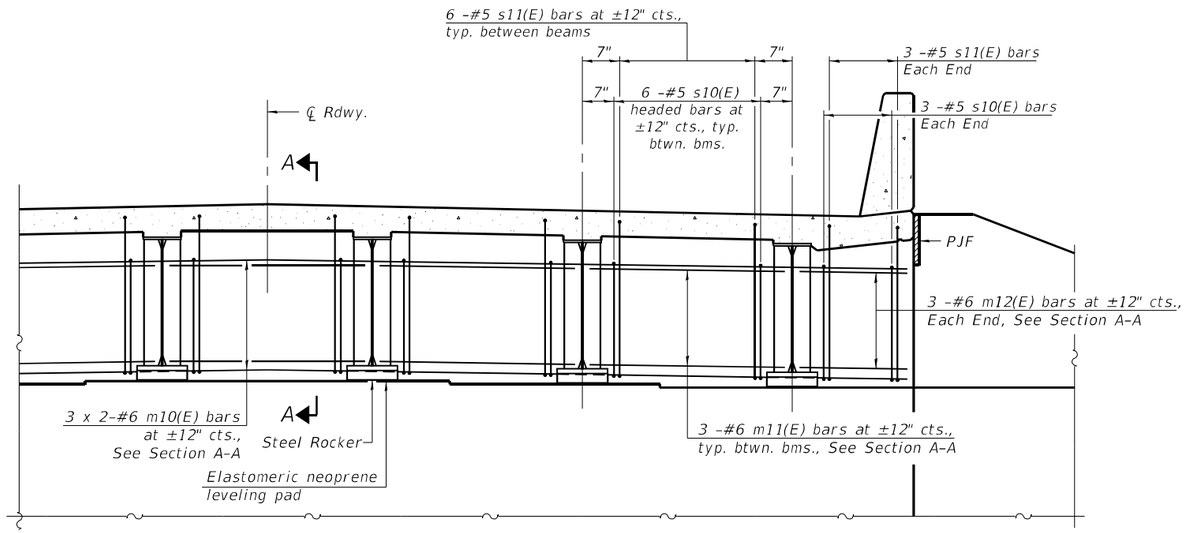

DIAPHRAGM AT ABUTMENT

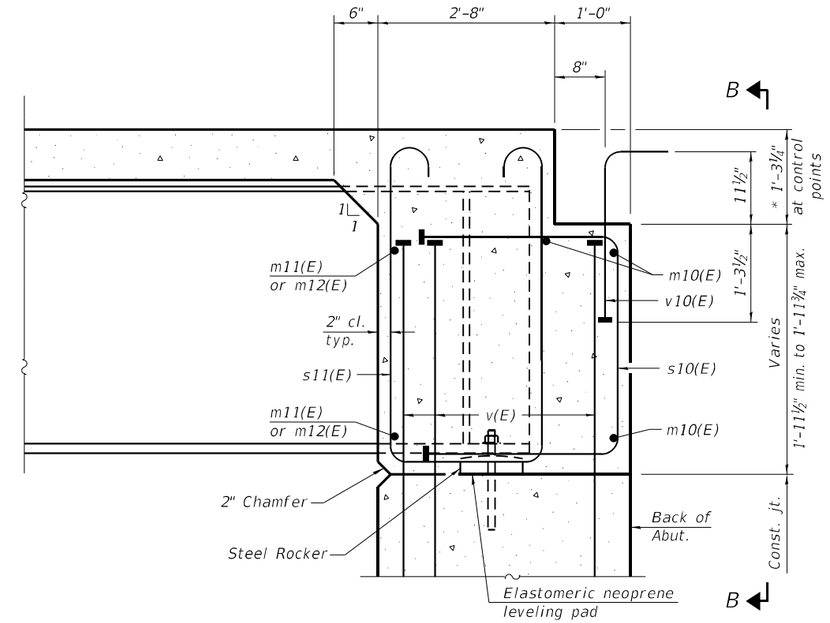

SECTION A-A

* Prior to grinding.

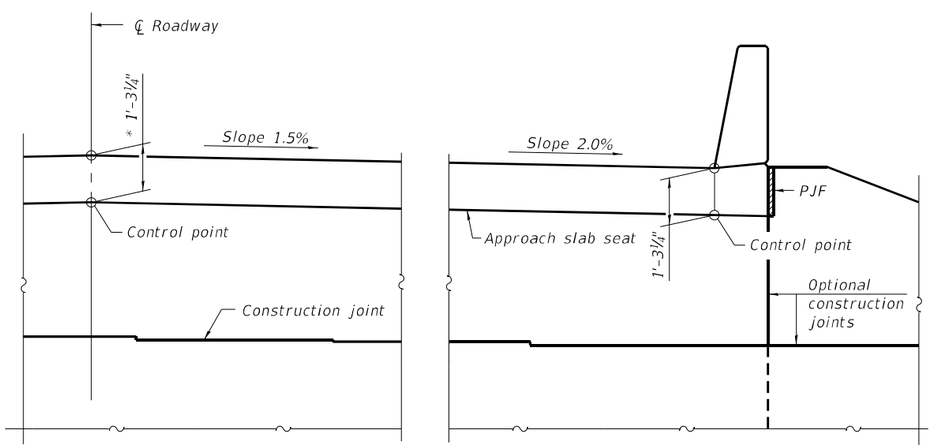

VIEW B-B

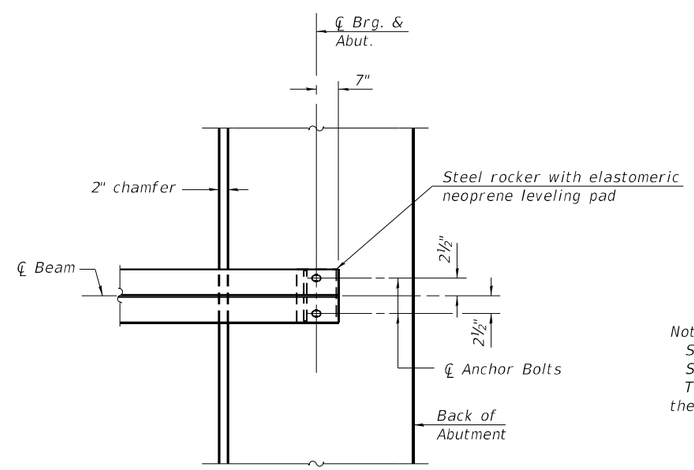

PLAN AT ABUTMENT

(Showing bottom flange of beam)

Notes:

See sheet 10 of 28 for superstructure details and Bill of Material.

See sheet 13 of 28 for PJF details.

The approach slab seat shall have a constant slope determined from the control points shown.

DIA-SB-0 2-1-2023

MODEL: Default
FILE NAME: P:\5XXX\50XX-51XX\5000 - IDOT PTB 200-038 D9 IL 13 Crab Orchard Bridges\24-Structures\CAD-MS\100-0107-78373-012-Diaphragm Details.dgn

CDI CIVIL DESIGN, INC. WBE / DBE EFFINGHAM, IL LICENSE #184.003222

USER NAME =	DESIGNED – JAG	REVISED –
	CHECKED – JGS	REVISED –
PLOT SCALE =	DRAWN – JAG	REVISED –
PLOT DATE =	CHECKED – JGS	REVISED –

STATE OF ILLINOIS
DEPARTMENT OF TRANSPORTATION

DIAPHRAGM DETAILS
STRUCTURE NO. 100-0107

SHEET 12 OF 28 SHEETS

F.A.P. RTE.	SECTION	COUNTY	TOTAL SHEETS	SHEET NO.
331	(1-4)R-5,RS-2,B-1,B-2,B-3,B-4	WILLIAMSON	519	258
		CONTRACT NO. 78373		
	ILLINOIS	FED. AID PROJECT		

3/11/2025 6:09:25 AM

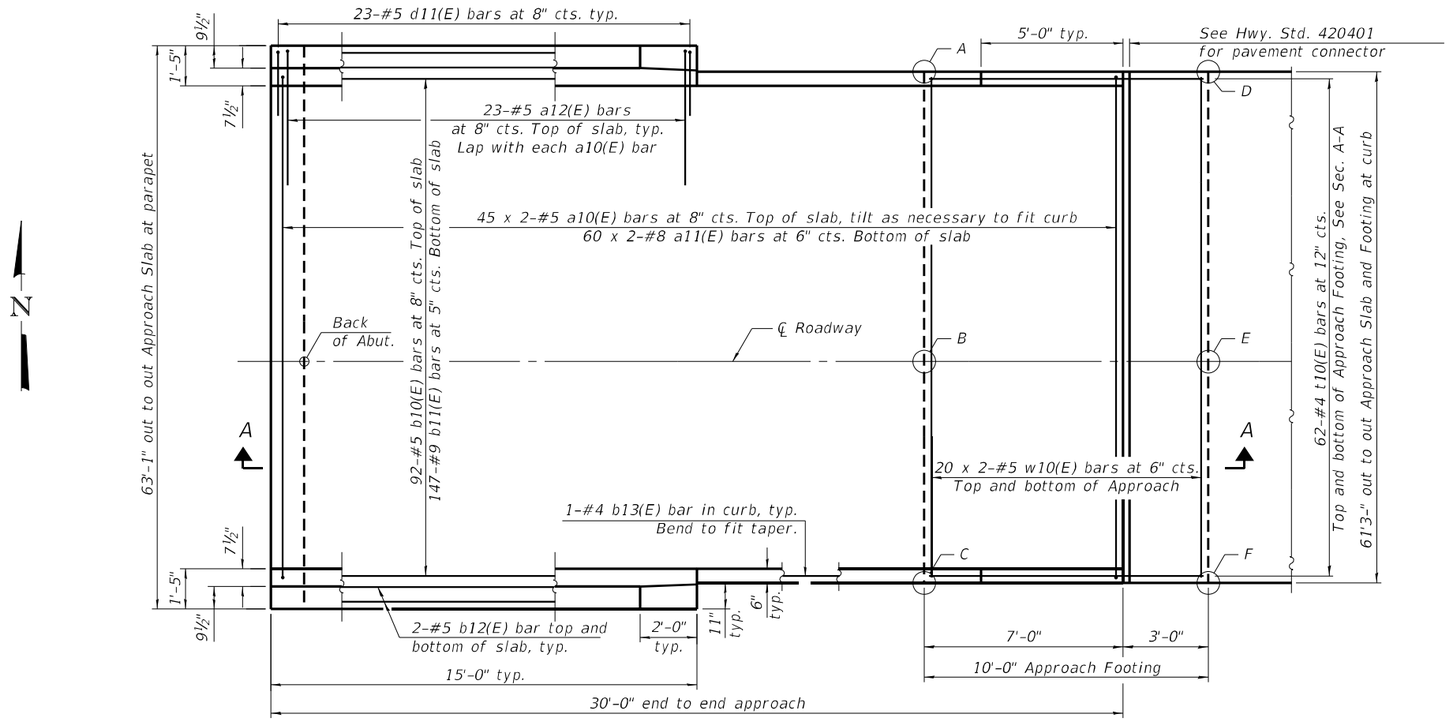

PLAN

(East approach slab shown; West approach slab similar by 180° rotation)

TOP AND BOTTOM ELEVATIONS FOR APPROACH FOOTING

East Approach			West Approach		
Point/ Location	Top	Bottom	Point/ Location	Top	Bottom
A - NW	413.33	412.50	A - NW	413.39	412.56
B - WCL	414.18	413.34	B - WCL	414.16	413.33
C - SW	413.89	413.06	C - SW	413.87	413.04
D - NE	413.32	412.49	D - NE	413.40	412.57
E - ECL	414.17	413.34	E - ECL	414.17	413.34
F - SE	413.88	413.05	F - SE	413.88	413.05

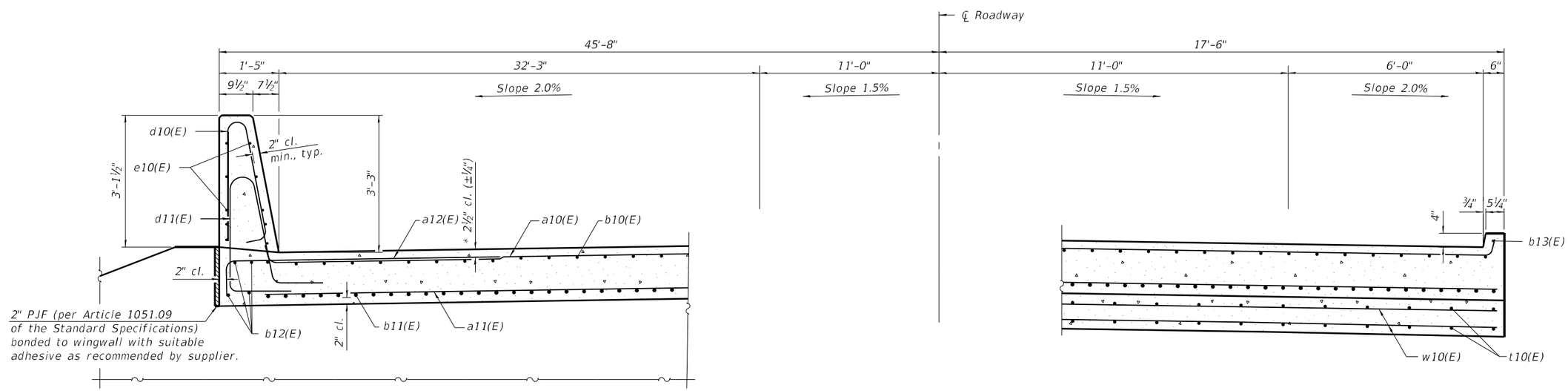

NEAR ABUTMENT

* Prior to grinding

CROSS SECTION

(Looking East)

AT APPROACH FOOTING

BAIA-CIP-39CS-0 2-1-2023

(Sheet 1 of 2)

MODEL: Default
FILE NAME: P:\5XXX50XX-51XX5000 - IDOT PTB 200-038 D9 IL 13 Crab Orchard Bridges\24-Structures\CAD-MS\100-0107-78373-013-BridgeApproachSlab1.dgn

3/11/2025 6:09:49 AM

CDI CIVIL DESIGN, INC. WBE / DBE EFFINGHAM, IL LICENSE #184.003222

USER NAME =	DESIGNED - JAG	REVISED -
	CHECKED - JGS	REVISED -
PLOT SCALE =	DRAWN - JAG	REVISED -
PLOT DATE =	CHECKED - JGS	REVISED -

STATE OF ILLINOIS
DEPARTMENT OF TRANSPORTATION

BRIDGE APPROACH SLAB DETAILS
STRUCTURE NO. 100-0107

SHEET 13 OF 28 SHEETS

F.A.P. RTE.	SECTION	COUNTY	TOTAL SHEETS	SHEET NO.
331	(1-4)R-5,RS-2,B-1,B-2,B-3,B-4	WILLIAMSON	519	259

CONTRACT NO. 78373

ILLINOIS FED. AID PROJECT

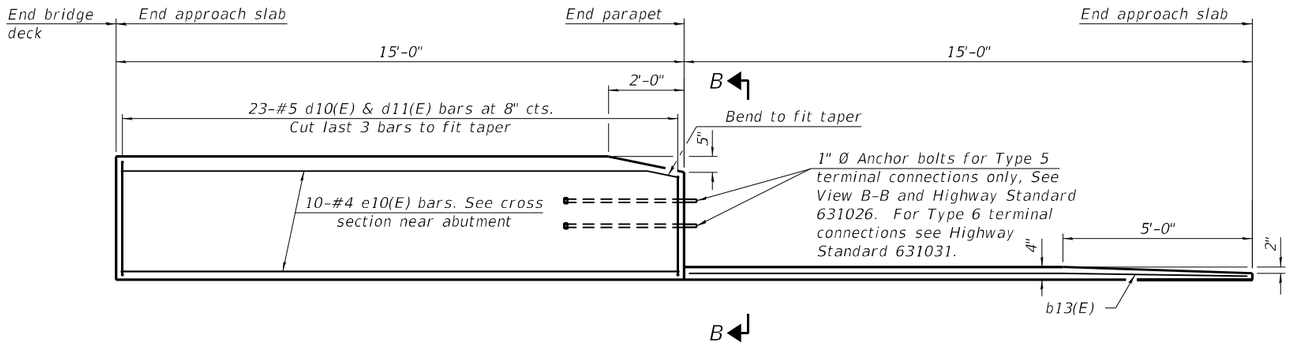

INSIDE ELEVATION OF PARAPET AND CURB

Notes:

The joint opening shall be adjusted for temperature per Article 520.04 of the Standard Specifications. However, since this detail is for jointless structures, the length of bridge used to calculate the adjustment shall be equal to half the total bridge length plus the length of the bridge approach slab.

Parapet concrete shall be paid for as Concrete Superstructure.

Approach slab shall be paid for as Concrete Superstructure (Approach Slab).

Approach footing concrete shall be paid for as Concrete Structures.

The approach footing maximum applied service bearing pressure (Qmax) = 2.0 ksf.

Cost of excavation for approach footing included with Concrete Structures.

For Granular Backfill for Structures and drainage treatment details, see sheet 2 of 28.

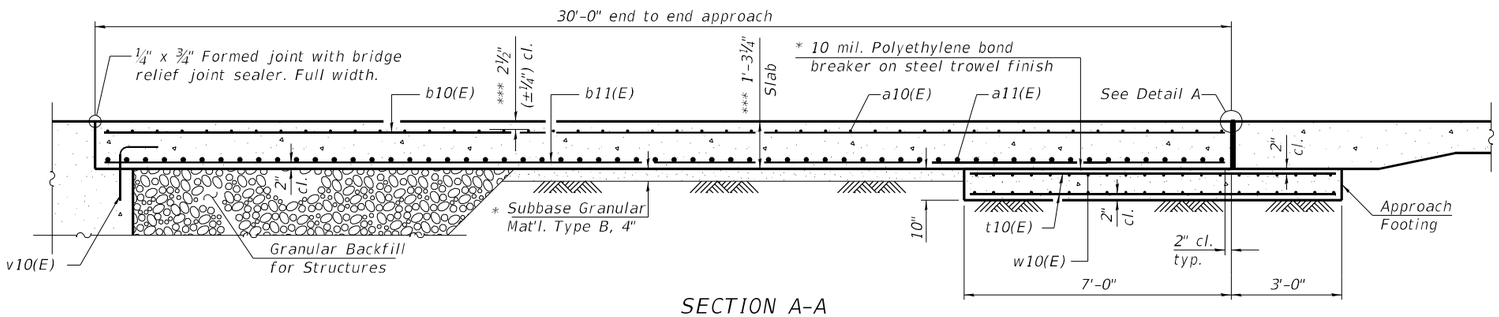

SECTION A-A

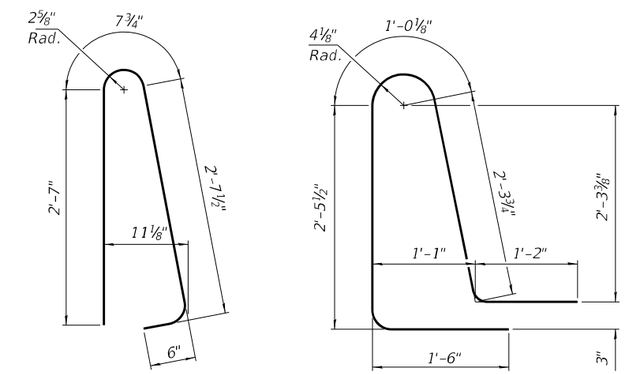

BAR d10(E)

BAR d11(E)

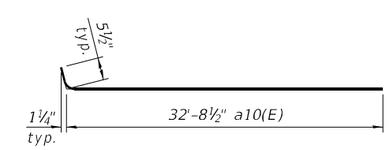

BAR a10(E)

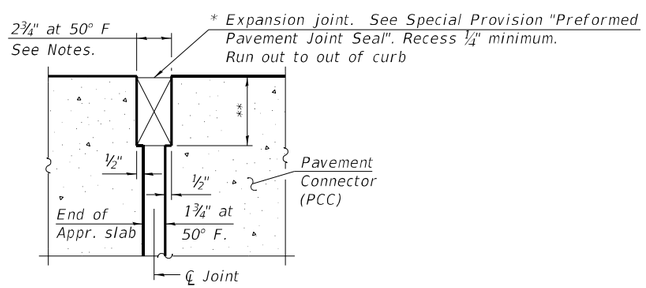

DETAIL A

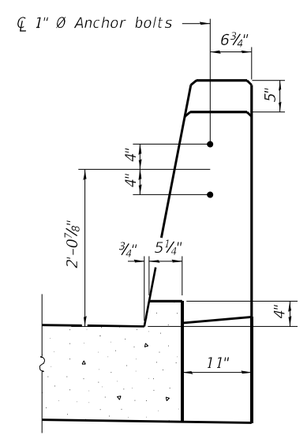

VIEW B-B

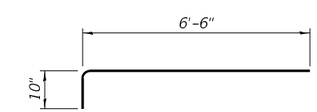

BAR a12(E)

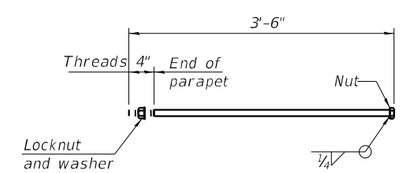

*1" Ø ANCHOR BOLT

(Anchor bolt assemblies shall be galvanized according to Article 1006.09 of the Standard Specifications)

TWO APPROACHES
BILL OF MATERIAL

Bar	No.	Size	Length	Shape
a10(E)	180	#5	33'-2"	
a11(E)	240	#8	33'-9"	
a12(E)	92	#5	7'-4"	
b10(E)	184	#5	29'-8"	
b11(E)	294	#9	29'-8"	
b12(E)	16	#5	14'-8"	
b13(E)	4	#4	14'-8"	
d10(E)	92	#5	6'-5"	
d11(E)	92	#5	8'-6"	
e10(E)	40	#4	14'-8"	
t10(E)	248	#4	9'-8"	
w10(E)	160	#5	32'-9"	
Concrete Superstructure			Cu. Yd.	7.8
Concrete Superstructure (Approach Slab)			Cu. Yd.	175.9
Concrete Structures			Cu. Yd.	37.8
Reinforcement Bars, Epoxy Coated			Pound	73,090

* Cost included with Concrete Superstructure (Approach Slab).

** Per manufacturer recommendations

*** Prior to grinding

BAIA-CIP-39CS-0 2-1-2023

(Sheet 2 of 2)

MODEL: Default
FILE NAME: P:\5XXX50XX-51XX\5000 - IDOT PTB 200-038 D9 IL 13 Crab Orchard Bridges\24-Structures\CAD-MS\100-0107-78373-014-BridgeApproachSlab2.dgn
3/11/2025 6:10:14 AM

CDI CIVIL DESIGN, INC. WBE / DBE EFFINGHAM, IL LICENSE #184.003222

USER NAME =	DESIGNED – JAG	REVISED –	
	CHECKED – JGS	REVISED –	
PLOT SCALE =	DRAWN – JAG	REVISED –	
PLOT DATE =	CHECKED – JGS	REVISED –	

STATE OF ILLINOIS
DEPARTMENT OF TRANSPORTATION

BRIDGE APPROACH SLAB DETAILS
STRUCTURE NO. 100-0107

SHEET 14 OF 28 SHEETS

F.A.P. RTE.	SECTION	COUNTY	TOTAL SHEETS	SHEET NO.
331	(1-4)R-5,RS-2,B-1,B-2,B-3,B-4	WILLIAMSON	519	260
		CONTRACT NO. 78373		
	ILLINOIS	FED. AID PROJECT		

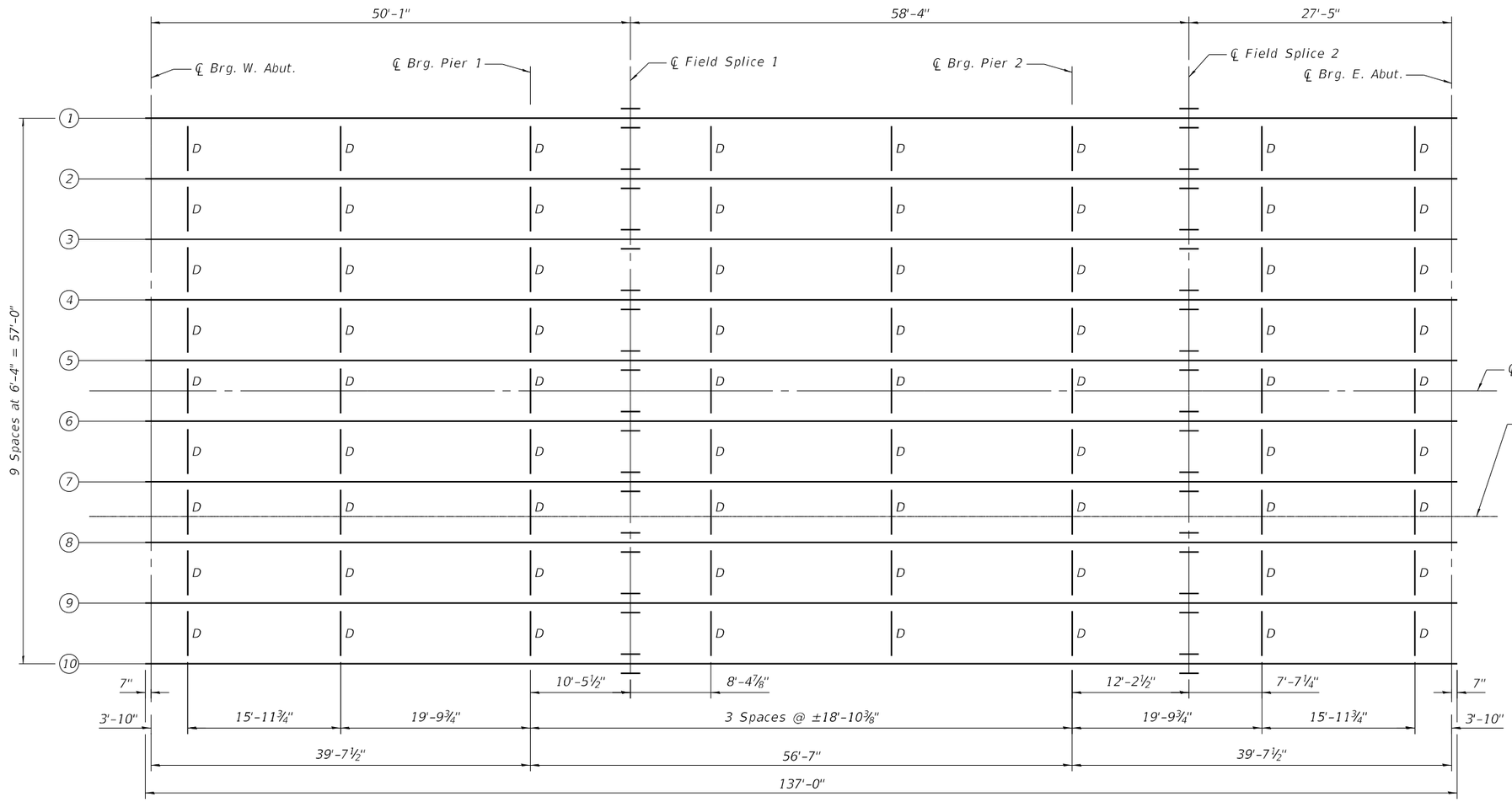

FRAMING PLAN

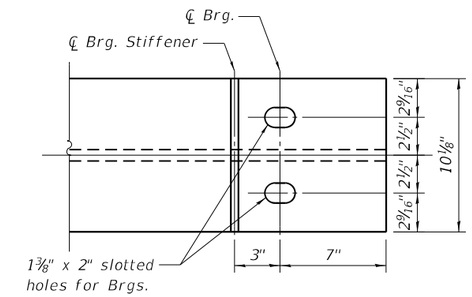

END OF BEAM DETAIL

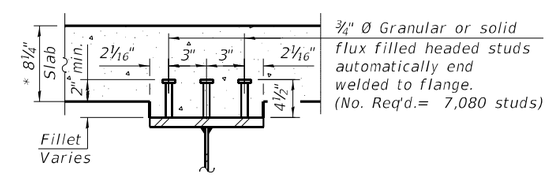

SECTION A-A

* Prior to grinding

Notes:

All splice plates and bearing stiffeners shall be ASTM M270, Grade 50.

Load carrying components designated "CVN" shall conform to the Charpy-V-Notch Impact Energy Requirement, Zone 2.

All diaphragms shall be installed as steel is erected and secured with erection pins and bolts except as otherwise noted. Individual diaphragms at supports may be temporarily disconnected to install bearing anchor rods.

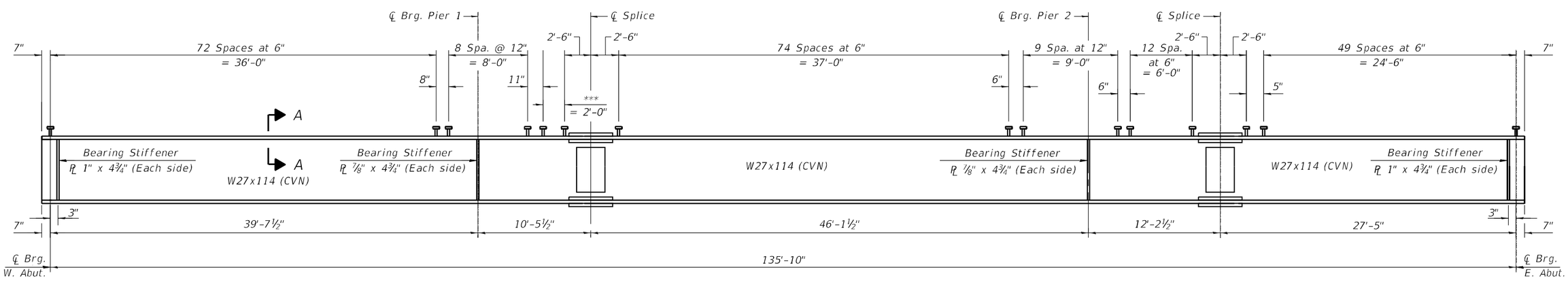

BEAM ELEVATION

*** 4 Spaces @ 6"

MODEL: Default
FILE NAME: P:\5XX\50XX-51XX\5000 - IDOT PTB 200-038 D9 IL 13 Crab Orchard Bridges\24-Structures\CAD-MS\100-0107-78373-015-Structural Steel.dgn

CDI CIVIL DESIGN, INC. WBE / DBE EFFINGHAM, IL LICENSE #184.003222	USER NAME =	DESIGNED – JAG	REVISED –	STATE OF ILLINOIS DEPARTMENT OF TRANSPORTATION	STRUCTURAL STEEL STRUCTURE NO. 100-0107	F.A.P. RTE.	SECTION	COUNTY	TOTAL SHEETS / SHEET NO.
		CHECKED – JGS	REVISED –			331	(1-4)R-5,RS-2,B-1,B-2,B-3,B-4	WILLIAMSON	519 / 261
	PLOT SCALE =	DRAWN – JAG	REVISED –					CONTRACT NO. 78373	
	PLOT DATE =	CHECKED – JGS	REVISED –		SHEET 15 OF 28 SHEETS		ILLINOIS	FED. AID PROJECT	

3/11/2025 6:10:38 AM

TOP OF WEB ELEVATIONS (FOR FABRICATION ONLY)

Location / Beam	Girder 1	Girder 2	Girder 3	Girder 4	Girder 5	Girder 6	Girder 7	Girder 8	Girder 9	Girder 10
℄ Brg. W. Abut.	413.87	414.00	414.13	414.25	414.38	414.50	414.59	414.60	414.51	414.39
℄ Brg. Pier 1	413.90	414.03	414.15	414.28	414.41	414.52	414.62	414.63	414.54	414.42
℄ Splice #1	413.90	414.03	414.16	414.28	414.41	414.53	414.62	414.64	414.54	414.42
℄ Brg. Pier 2	413.91	414.04	414.17	414.29	414.42	414.54	414.63	414.64	414.55	414.43
℄ Splice #2	413.91	414.04	414.16	414.29	414.42	414.53	414.63	414.64	414.55	414.43
℄ Brg. E. Abut.	413.90	414.03	414.15	414.28	414.41	414.52	414.62	414.63	414.54	414.42

Notes:
Alternate channels of equal depth and larger weight are permitted to facilitate material acquisition. Alternate channels, if utilized, shall be provided at no additional cost to the Department.

Two hardened washers required for each set of oversized holes.

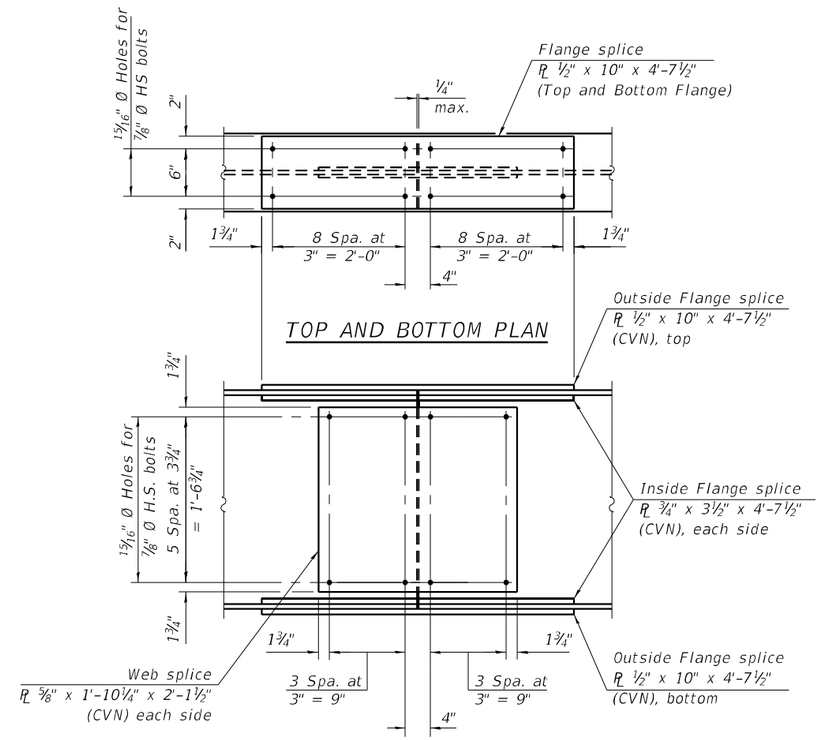

ELEVATION

SPLICE DETAIL
(20 Required)

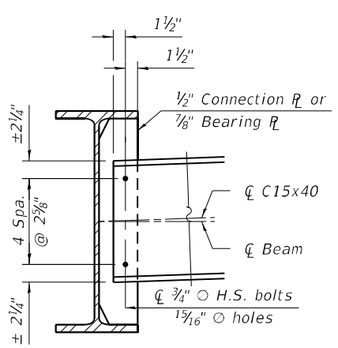

DIAPHRAGM D
(72 Required)

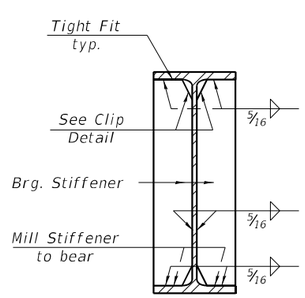

BEARING STIFFENER DETAIL

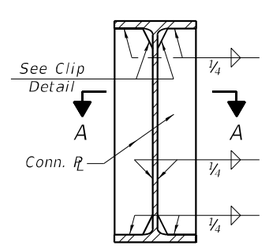

CONNECTION PLATE DETAIL

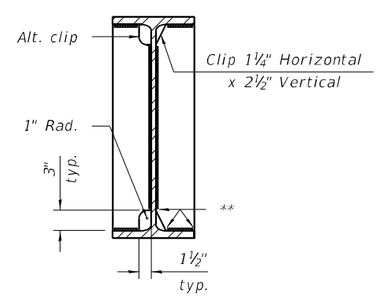

WELD LIMITS AND CLIP DETAILS

** Stop welds 1/4" (±1/8") from edges as shown. Typical.

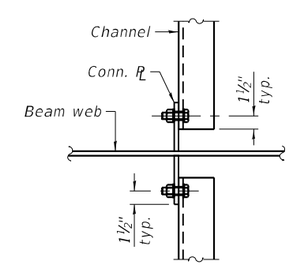

SECTION A-A

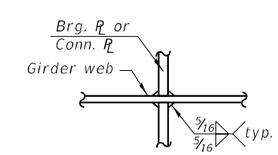

WEB WELD DETAIL

INTERIOR GIRDER MOMENT TABLE				
		0.4 Sp. 1 or 0.6 Sp. 3	Pier 1 & Pier 2	0.5 Sp. 2
I_s	(in^4)	4,080	4,080	4,080
$I_c(n)$	(in^4)	12,960	12,960	12,960
$I_c(3n)$	(in^4)	9,574	9,574	9,574
$I_c(cr)$	(in^4)	——	6,051	——
S_s	(in^3)	299	299	299
$S_c(n)$	(in^3)	480	——	480
$S_c(3n)$	(in^3)	432	——	432
$S_c(cr)$	(in^3)	——	309	——
S_x	(in^3)	——	——	——
DC1	(k/')	0.844	0.844	0.844
M_{DC1}	('k)	74	196	128
DC2	(k/')	0.175	0.175	0.175
M_{DC2}	('k)	16	43	27
DW	(k/')	0.301	0.301	0.301
M_{DW}	('k)	27	74	47
LLDF		0.577	0.548	0.526
M_{LL+IM}	('k)	346	330	382
f_l (Strength I)	(ksi)	——	——	——
$M_u + \frac{1}{3} f_l S_x$	('k)	759	987	933
$\phi_f M_n$	('k)	2,581	1,797	2,457
f_s DC1	(ksi)	2.97	7.87	5.14
f_s DC2	(ksi)	0.44	1.67	0.75
f_s DW	(ksi)	0.75	2.88	1.30
f_s (LL+IM)	(ksi)	8.66	12.83	9.56
f_l (Service II)	(ksi)	0.0	0.0	0.0
$f_s + f_l/2$ (Service II)	(ksi)	15.42	29.09	19.61
Service II Resistance	(ksi)	47.5	47.5	47.5
$f_s + f_l/3$ (Strength I)	(ksi)	20.5	38.7	26.0
$\phi_f F_n$	(ksi)	——	——	——
V_f	(k)	31.7	38.2	29.7

GIRDER REACTION TABLE			
		Abut.	Pier
LLDF		0.695	0.695
OCF		–	–
R_{DC1}	(k)	11.9	44.0
R_{DC2}	(k)	2.4	9.5
R_{DW}	(k)	4.1	16.4
R_{LL}	(k)	44.4	72.3
R_{Im}	(k)	11.9	15.5
R_{Total} (Strength I)(Impact)	(k)	122.6	245.1
R_{Total} (Strength I)(No Impact)	(k)	101.7	218.0

I_s, S_s : Non-composite moment of inertia and section modulus of the steel section used for computing f_s(Total-Strength I, and Service II) due to non-composite dead loads ($in.^4$ and $in.^3$).

$I_c(n)$, $S_c(n)$: Composite moment of inertia and section modulus of the steel and deck based upon the modular ratio, "n", used for computing f_s(Total-Strength I, and Service II) in uncracked sections due to short-term composite live loads ($in.^4$ and $in.^3$).

$I_c(3n)$, $S_c(3n)$: Composite moment of inertia and section modulus of the steel and deck based upon 3 times the modular ratio, "3n", used for computing f_s(Total-Strength I, and Service II) in uncracked sections, due to long-term composite (superimposed) dead loads ($in.^4$ and $in.^3$).

$I_c(cr)$, $S_c(cr)$: Composite moment of inertia and section modulus of the steel and longitudinal deck reinforcement, used for computing f_s (Total-Strength I and Service II) in cracked sections, due to both short-term composite live loads and long-term composite (superimposed) dead loads ($in.^4$ and $in.^3$).

S_x : Section modulus about the major axis of a section to the controlling flange, tension or compression, taken as yield moment with respect to the controlling flange over the yield strength of the controlling flange ($in.^3$).

DC1: Un-factored non-composite dead load (kips/ft.).

M_{DC1} : Un-factored moment due to non-composite dead load (kip-ft.).

DC2: Un-factored long-term composite (superimposed excluding future wearing surface) dead load (kips/ft.).

M_{DC2} : Un-factored moment due to long-term composite (superimposed excluding future wearing surface only) dead load (kip-ft.).

DW: Un-factored long-term composite (superimposed future wearing surface only) dead load (kips/ft.).

M_{DW} : Un-factored moment due to long-term composite (superimposed future wearing surface only) dead load (kip-ft.).

LLDF: Live Load Distribution Factor for moment and shear computed according to Article 4.6.2.2 and further IDOT provisions.

M_{LL+IM}: Un-factored live load moment plus dynamic load allowance (impact) (kip-ft.).

M_u : Strength I load combination of factored design moments (kip-ft.).
$1.25 (M_{DC1} + M_{DC2}) + 1.5 M_{DW} + 1.75 M_{LL+IM}$

f_l : Factored calculated flange lateral bending stress as calculated using Article 6.10.1.6 and as further simplified by IDOT provisions (ksi).

$\phi_f M_n$: Factored nominal flexural resistance of the section determined as specified in Article 6.10.7.1 or A6 as applicable (kip-ft.).

f_s DC1: Un-factored stress at edge of flange for controlling steel flange due to vertical non-composite dead loads as calculated below (ksi).
M_{DC1} / S_s

f_s DC2: Un-factored stress at edge of flange for controlling steel flange due to vertical composite dead loads as calculated below (ksi).
$M_{DC2} / S_c(3n)$ or $M_{DC2} / S_c(cr)$ as applicable.

f_s DW: Un-factored stress at edge of flange for controlling steel flange due to vertical composite future wearing surface loads as calculated below (ksi).
$M_{DW} / S_c(3n)$ or $M_{DW} / S_c(cr)$ as applicable.

f_s (LL + IM): Un-factored stress at edge of flange for controlling steel flange due to vertical composite live load plus impact loads as calculated below (ksi).
$M_{LL+IM} / S_c(n)$ or $M_{LL+IM} / S_c(cr)$ as applicable.

$f_s + f_l/2$ (Service II): Sum of stresses as computed below (ksi).
f_s DC1 + f_s DC2 + f_s DW + 1.3 f_s (LL + IM) + $f_l/2$

Service II Resistance: Composite ($0.95R_hF_{yf}$) or noncomposite ($0.80R_hF_{yf}$) stress capacity according to Article 6.10.4.2 (ksi).

$f_s + f_l/3$ (Strength I): Sum of stresses as computed below on non-compact sections (ksi).
1.25 (f_s DC1 + f_s DC2) + 1.5 f_s DW + 1.75 f_s (LL + IM) + $f_l/3$

$\phi_f F_n$: Factored nominal flexural resistance of the section as specified in Article 6.10.7.2 or 6.10.8 as applicable (ksi).

V_f : Maximum factored shear range in span computed according to Article 6.10.10.

OCF: Obtuse Correction Factor according to Article 4.6.2.2.3c or as further simplified by IDOT provisions.

R_{DC1} : Un-factored reaction due to non-composite dead load (kip).

R_{DC2} : Un-factored reaction due to long-term composite (superimposed excluding future wearing surface) dead load (kip).

R_{DW} : Un-factored reaction due to long-term composite (superimposed future wearing surface only) dead load (kip).

R_{LL} : Un-factored live load reaction (kip).

R_{IM} : Un-factored dynamic load allowance (impact) (kip).

R_{Total} (Strength I)(Impact): Strength I load combination of factored design reactions (kip).
$1.25 (R_{DC1} + R_{DC2}) + 1.5R_{DW} + 1.75 (R_{LL} + R_{IM})$

R_{Total} (Strength I)(No Impact): Strength I load combination of factored design reactions, not including dynamic load allowance (Impact) (kip).
$1.25 (R_{DC1} + R_{DC2}) + 1.5R_{DW} + 1.75 (R_{LL})$

Note:
M_{LL} and R_{LL} include the effects of centrifugal force and superelevation.

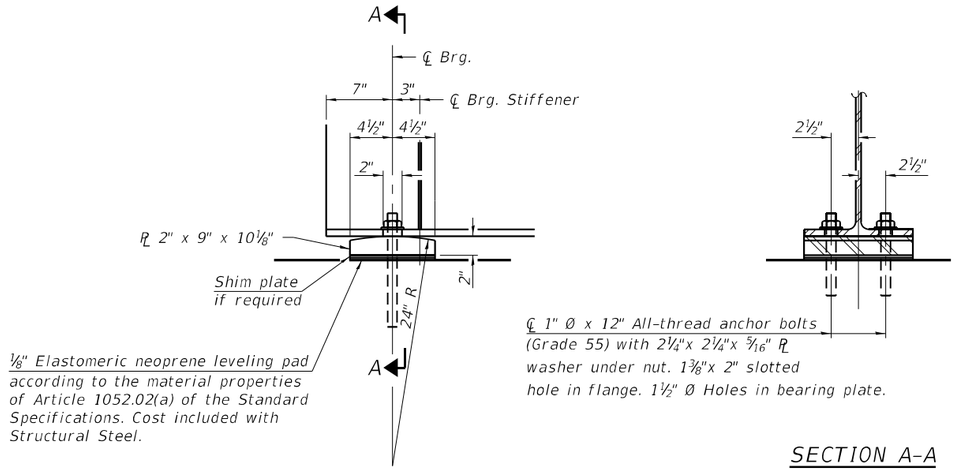

ELEVATION AT ABUTMENT

SECTION A-A

FIXED BEARING AT ABUTMENT

(20 Required)

Notes:

Anchor bolts shall be according to Article 521.06 of the Standard Specifications.

Beams shall be braced for stability during erection and remain braced until deck is poured and cured.

Anchor bolts at all supports shall be installed as each member is erected unless an equivalent temporary means of lateral restraint is used.

Anchor bolts shall be ASTM F1554 all-thread (or an Engineer-approved alternate material) of the grade(s) and diameter(s) specified. The corresponding specified grade of AASHTO M314 anchor bolts may be used in lieu of ASTM F1554.

The anchor bolts sizes and grades shown at the pier constitute a calculated seismic structural fuse. Substitution of higher diameter and/or grade anchor bolts will not be allowed.

The structural steel bearing and fill plates shall conform to the requirement of AASHTO M270 Grade 50.

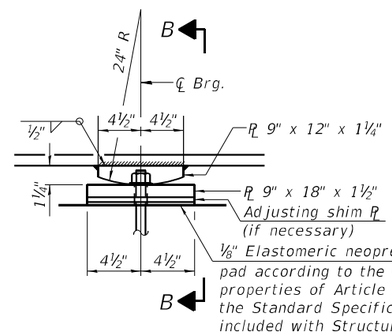

ELEVATION AT PIER

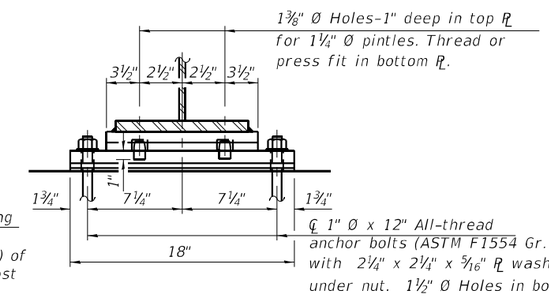

SECTION B-B

FIXED BEARING AT PIER

(20 Required)

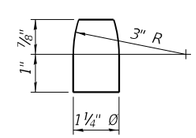

PINTLE

Notes:

Beam 8 shall have one - 18"x12"x3/16" thick shim plate for the bearing at each pier. Cost included with Furnishing and Erecting Structural Steel.

BILL OF MATERIAL

Item	Unit	Total
Anchor Bolts, 1"	Each	80

MODEL: Default
FILE NAME: P:\5XXX\50XX-51XX\5000 - IDOT PTB 200-038 D9 IL 13 Crab Orchard Bridges\24-Structures\CAD-MS\100-0107-78373-018-Bearing Details.dgn

CIVIL DESIGN, INC.
WBE / DBE
EFFINGHAM, IL
LICENSE #184.003222

USER NAME =	DESIGNED - JAG	REVISED -	
	CHECKED - JGS	REVISED -	
PLOT SCALE =	DRAWN - JAG	REVISED -	
PLOT DATE =	CHECKED - JGS	REVISED -	

STATE OF ILLINOIS
DEPARTMENT OF TRANSPORTATION

BEARING DETAILS
STRUCTURE NO. 100-0107

SHEET 18 OF 28 SHEETS

F.A.P. RTE.	SECTION	COUNTY	TOTAL SHEETS	SHEET NO.
331	(1-4)R-5,RS-2,B-1,B-2,B-3,B-4	WILLIAMSON	519	264
		CONTRACT NO. 78373		
		ILLINOIS FED. AID PROJECT		

3/11/2025 6:12:00 AM

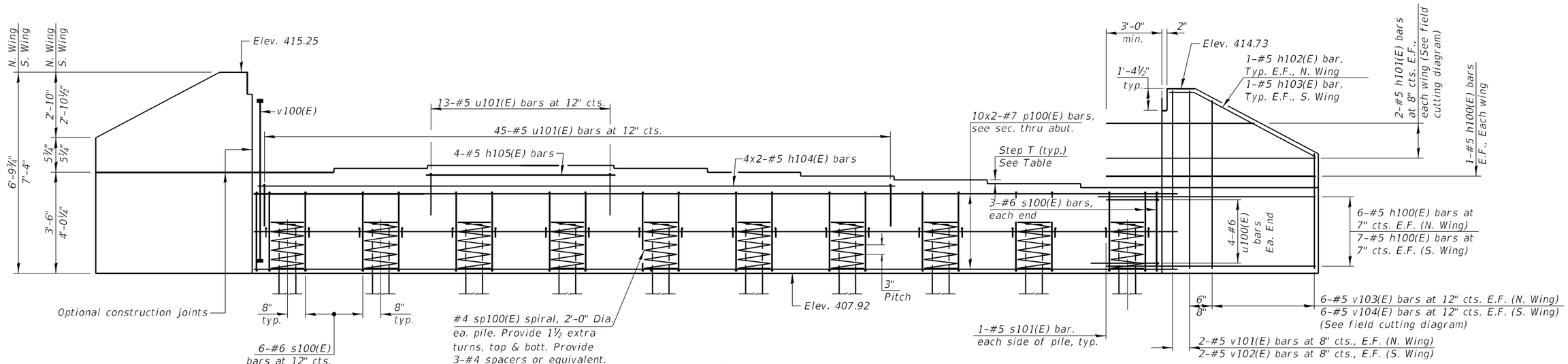

ELEVATION
(Looking West)

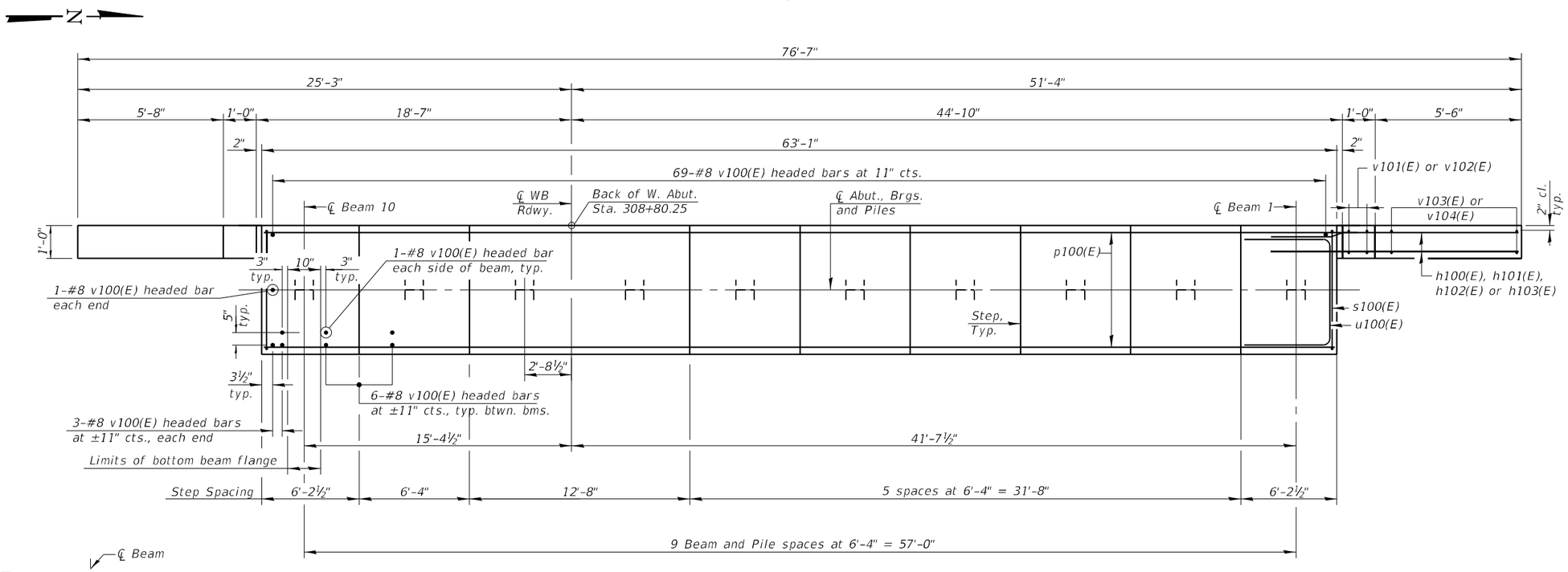

PLAN

PILE DATA

Type: HP 14x89 with Pile Shoes
Nominal Required Bearing: 705 kips
Factored Resistance Available: 387 kips
Est. Length: 62 feet
No. Production Piles: 9
No. Test Piles: 1

BEARING SEAT ELEVATIONS

Beam	Brg. Seat Elevation	Step T (Inch)
1	411.42	
		1⅝"
2	411.55	
		1½"
3	411.68	
		1½"
4	411.80	
		1½"
5	411.93	
		1½"
6	412.05	
		1"
7	412.14	
		0
8	412.14	
		1"
9	412.06	
		1⅜"
10	411.94	

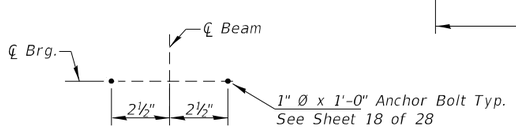

ANCHOR BOLT LAYOUT

ADJUSTMENT SHIM PLATE THICKNESS

Location	Beam 1	Beam 2	Beam 3	Beam 4	Beam 4	Beam 6	Beam 7	Beam 8	Beam 9	Beam 10
Thickness	none	none	none	none	none	none	none	⅛"	none	none

MINIMUM BAR LAP

#4 Bar = 2'-11"
#7 Bar = 5'-0"

Notes:
Pour steps monolithically with cap.
For details of piles see sheet 25 of 28.
Bars indicated thus 10x2 - #7 etc. indicates 10 lines of bars with 2 lengths per line.

MODEL: Default
FILE NAME: Z:\0 V and K Jobs\652 - Civil Design Inc\6521 - CDI - PTB 200-38 IL 13 Structures and Erosion Control\CADD\Structural\SN 100-0107 WB\100-0107-78373-0xx-W Abut .dgn
2/14/2025 11:33:11 AM

VEENSTRA & KIMM INC.
Springfield, IL. Phone: (217)544-8033
IL. Design Firm No. 184-001939

USER NAME =	DESIGNED - VVR	REVISED -	
	CHECKED - DHC	REVISED -	
PLOT SCALE =	DRAWN - VVR	REVISED -	
PLOT DATE = FEBRUARY 14th, 2025	CHECKED - DHC	REVISED -	

STATE OF ILLINOIS
DEPARTMENT OF TRANSPORTATION

WEST ABUTMENT
STRUCTURE NO. 100 - 0107 (W.B.)
SHEET 19 OF 28 SHEETS

F.A.P. RTE.	SECTION	COUNTY	TOTAL SHEETS	SHEET NO.
331	(1-4)R-5,RS-2,B-1,B-2,B-3,B-4	WILLIAMSON	519	265
		CONTRACT NO. 78373		
		ILLINOIS FED. AID PROJECT		

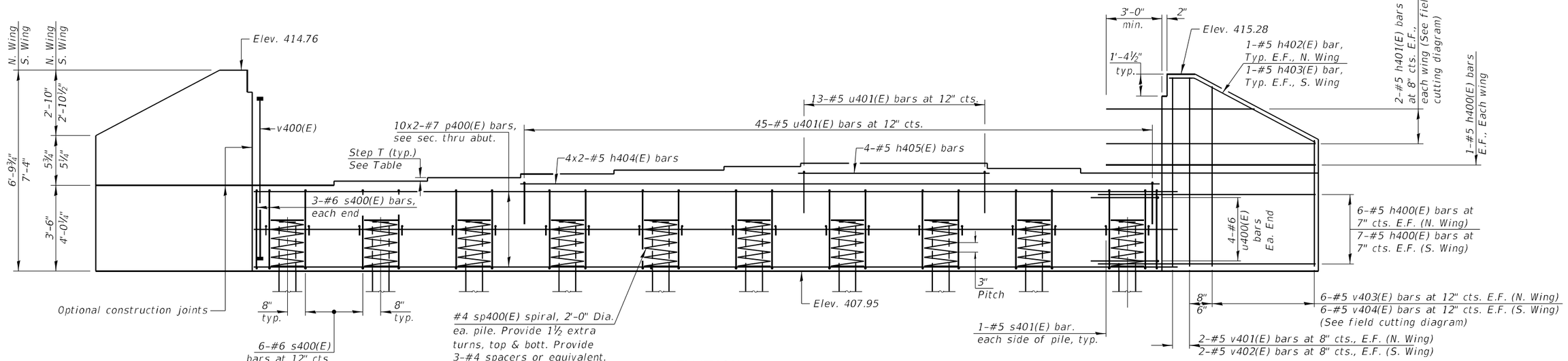

ELEVATION
(Looking East)

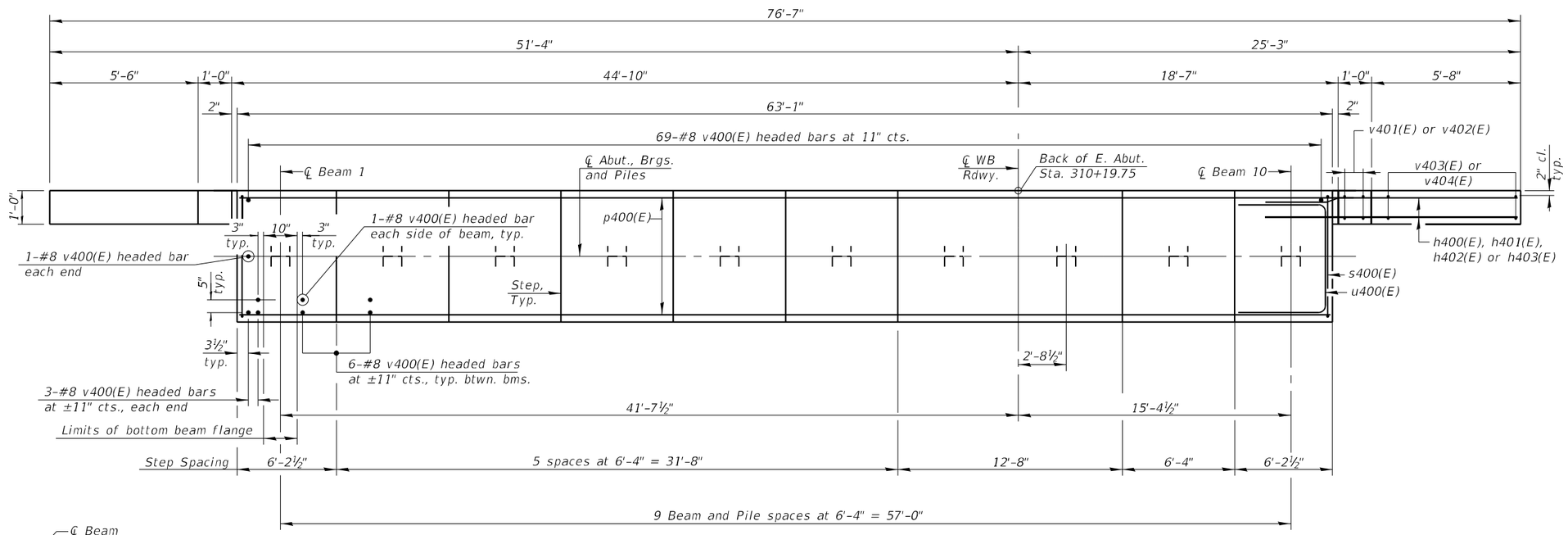

PLAN

PILE DATA

Type: HP 14x89 with Pile Shoes
Nominal Required Bearing: 708 kips
Factored Resistance Available: 387 kips
Est. Length: 62 feet
No. Production Piles: 9
No. Test Piles: 1

BEARING SEAT ELEVATIONS

Beam	Brg. Seat Elevation	Step T (Inch)
1	411.45	
		1½"
2	411.58	
		1½"
3	411.70	
		1½"
4	411.83	
		1⅜"
5	411.96	
		1⅜"
6	412.07	
		1⅛"
7	412.17	
		0
8	412.17	
		⅞"
9	412.09	
		1½"
10	411.97	

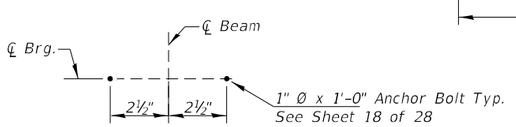

ANCHOR BOLT LAYOUT

ADJUSTMENT SHIM PLATE THICKNESS

Location	Beam 1	Beam 2	Beam 3	Beam 4	Beam 4	Beam 6	Beam 7	Beam 8	Beam 9	Beam 10
Thickness	none	none	none	none	none	none	none	⅛"	none	none

MINIMUM BAR LAP

#4 Bar = 2'-11"
#7 Bar = 5'-0"

Notes:
Pour steps monolithically with cap.
For details of piles see sheet 25 of 28.
Bars indicated thus 10x2 - #7 etc. indicates 10 lines of bars with 2 lengths per line.

MODEL: Default
FILE NAME: Z:\0 V and K Jobs\652 - Civil Design Inc\6521 - CDI - PTB 200-38 IL 13 Structures and Erosion Control\CADD\Structural\SN 100-0107 WB\100-0107-78373-0xx-E Abut.dgn
2/14/2025 11:33:11 AM

VEENSTRA & KIMM INC.
Springfield, IL. Phone: (217)544-8033
IL. Design Firm No. 184-001939

USER NAME =	DESIGNED - VVR	REVISED -	
	CHECKED - DHC	REVISED -	
PLOT SCALE =	DRAWN - VVR	REVISED -	
PLOT DATE = FEBRUARY 14th, 2025	CHECKED - DHC	REVISED -	

STATE OF ILLINOIS
DEPARTMENT OF TRANSPORTATION

EAST ABUTMENT
STRUCTURE NO. 100 - 0107 (W.B.)
SHEET 20 OF 28 SHEETS

F.A.P. RTE.	SECTION	COUNTY	TOTAL SHEETS	SHEET NO.
331	(1-4)R-5,RS-2,B-1,B-2,B-3,B-4	WILLIAMSON	519	266
		CONTRACT NO. 78373		
		ILLINOIS	FED. AID PROJECT	

WEST ABUTMENT BILL OF MATERIAL

Bar	No.	Size	Length	Shape
h100(E)	30	#5	9'-8"	
h101(E)	4	#5	15'-3"	
h102(E)	2	#5	6'-10"	
h103(E)	2	#5	6'-11"	
h104(E)	8	#5	23'-5"	
h105(E)	4	#5	12'-4"	
p100(E)	20	#7	33'-11"	
s100(E)	60	#6	14'-4"	
s101(E)	20	#5	4'-4"	
* sp100(E)	10	#4	2'-0"	
u100(E)	8	#6	11'-10"	
u101(E)	58	#5	7'-4"	
v100(E)	151	#8	5'-3"	
v101(E)	4	#5	6'-5"	
v102(E)	4	#5	7'-0"	
v103(E)	6	#5	9'-11"	
v104(E)	6	#5	11'-0"	
Structure Excavation			Cu. Yd.	152
Concrete Structures			Cu. Yd.	36.7
Reinforcement Bars, Epoxy Coated			Pound	6820
Furnishing Steel Piles HP14X89			Foot	558
Driving Piles			Foot	558
Test Pile Steel HP14X89			Each	1
Pile Shoes			Each	10
Granular Backfill for Structures			Cu. Yd.	112
Geocomposite Wall Drain			Sq. Yd.	47
Pipe Underdrains for Structures			Foot	113

* Length is height of spiral.

EAST ABUTMENT BILL OF MATERIAL

Bar	No.	Size	Length	Shape
h400(E)	30	#5	9'-8"	
h401(E)	4	#5	15'-3"	
h402(E)	2	#5	6'-10"	
h403(E)	2	#5	6'-11"	
h404(E)	8	#5	23'-5"	
h405(E)	4	#5	12'-4"	
p400(E)	20	#7	33'-11"	
s400(E)	60	#6	14'-4"	
s401(E)	20	#5	4'-4"	
* sp400(E)	10	#4	2'-0"	
u400(E)	8	#6	11'-10"	
u401(E)	58	#5	7'-4"	
v400(E)	151	#8	5'-3"	
v401(E)	4	#5	6'-5"	
v402(E)	4	#5	7'-0"	
v403(E)	6	#5	9'-11"	
v404(E)	6	#5	11'-0"	
Structure Excavation			Cu. Yd.	153
Concrete Structures			Cu. Yd.	36.7
Reinforcement Bars, Epoxy Coated			Pound	6820
Furnishing Steel Piles HP14X89			Foot	558
Driving Piles			Foot	558
Test Pile Steel HP14X89			Each	1
Pile Shoes			Each	10
Granular Backfill for Structures			Cu. Yd.	113
Geocomposite Wall Drain			Sq. Yd.	47
Pipe Underdrains for Structures			Foot	113

* Length is height of spiral.

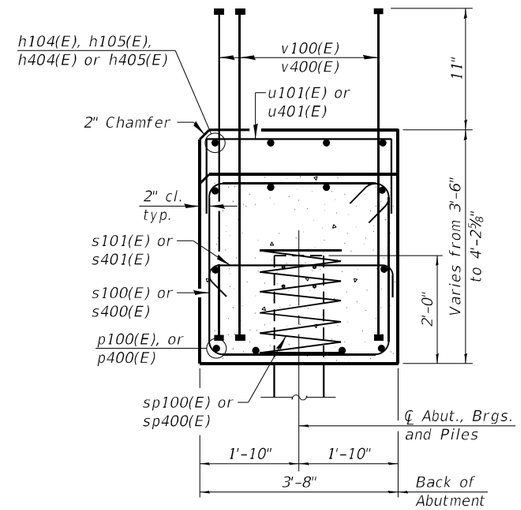

SEC. THRU ABUT.

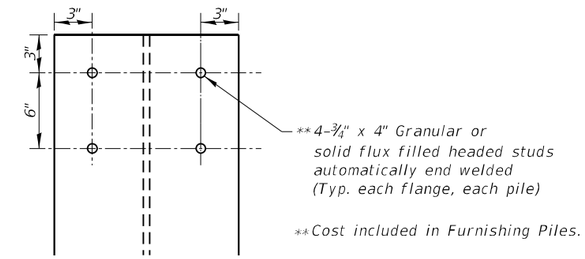

DETAIL A
Pile Studs

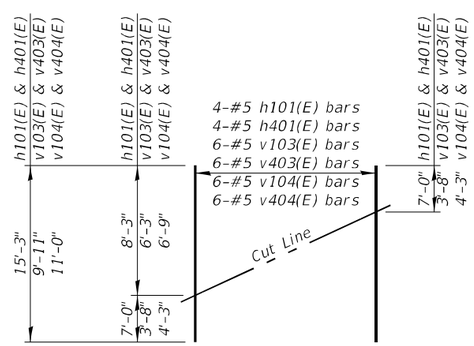

FIELD CUTTING DIAGRAM

Order h101(E), h401(E), v103(E), v104(E), v403(E) and v404(E) full length. Cut as shown and use remainder of bars in opposite face.

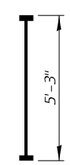

BARS v100(E) & V400(E)
(Headed. 772-#8 Bar terminators)

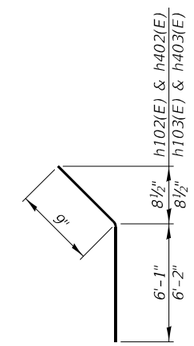

BARS h102(E) & h103(E)
BARS h402(E) & h403(E)

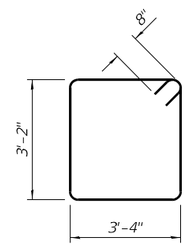

BARS s100(E) & s400(E)

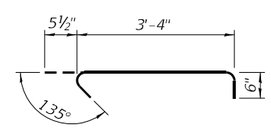

BARS s101(E) & s401(E)

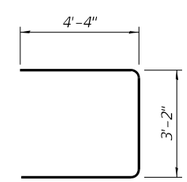

BARS u100(E) & u400(E)

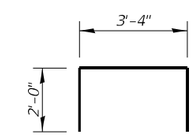

BARS u101(E) & u401(E)

Note: Bar terminators paid for separately.
See Total Bill of Material

Notes:
Pour steps monolithically with cap.
See sheet 24 of 28 for additional pier details and Bill of Material.
Space reinforcement in cap to miss anchor bolts.
For details of piles, see sheet 25 of 28.
Bars indicated thus 23 X 2 - #5 etc. indicates 23 lines of bars with 2 lengths per line.

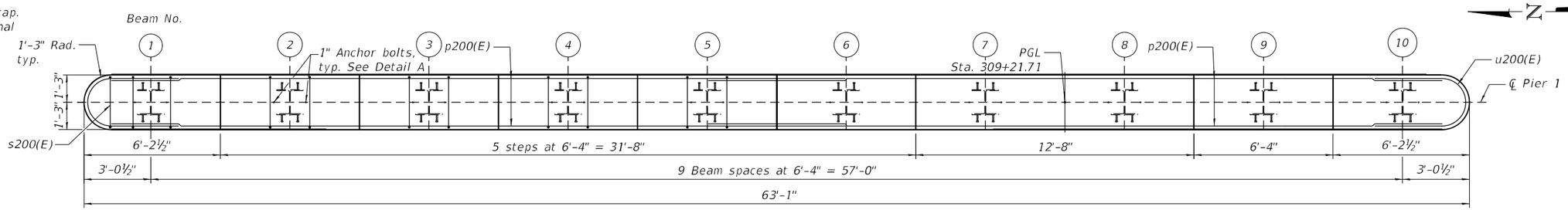

TOP PLAN

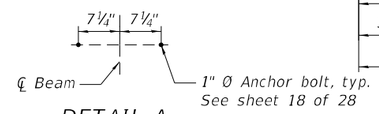

DETAIL A

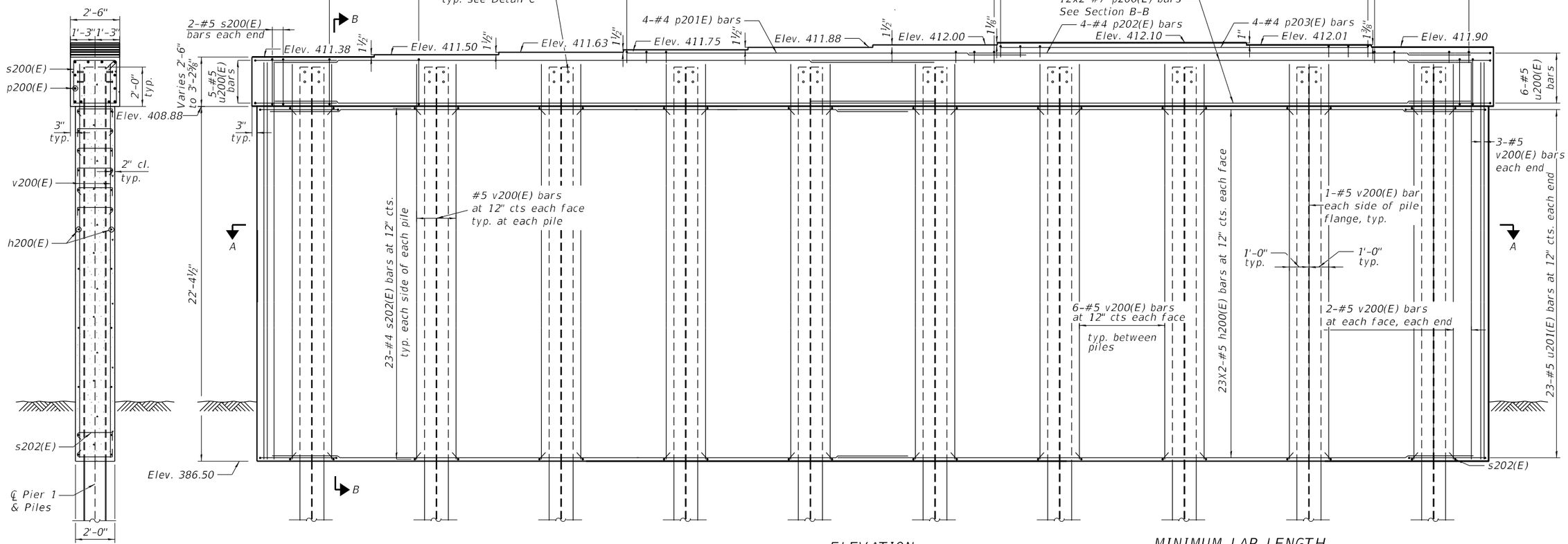

SECTION B-B

ELEVATION

MINIMUM LAP LENGTH

#4 bar = 2'-11"
#5 bar = 3'-7"
#7 bar = 6'-3"

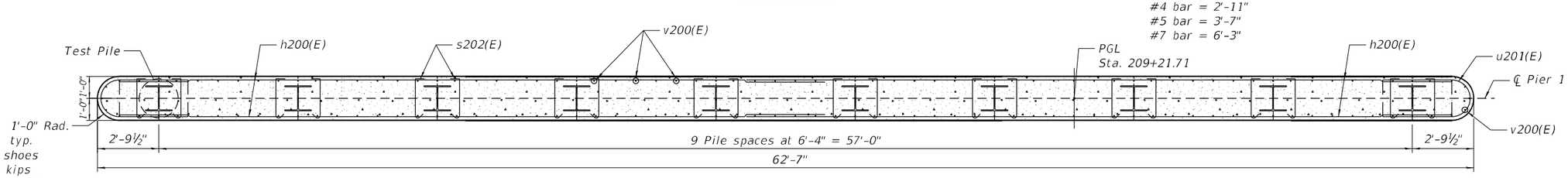

SECTION A-A

PILE DATA

Type: Steel HP14x89 with pile shoes
Nominal Required Bearing: 667 kips
Factored Resistance Available: 352 kips
Est. Length: 66'
No. Req'd: 9
Test Pile: 1

Michael Baker INTERNATIONAL
200 W Adams Street
Suite 1800
Chicago, IL 60606
PH: 312.707.8770
FAX: 312.707.8804

USER NAME =	DESIGNED - AMR	REVISED -	
	CHECKED - MLK	REVISED -	
PLOT SCALE =	DRAWN - FS	REVISED -	
PLOT DATE =	CHECKED - AMR	REVISED -	

STATE OF ILLINOIS
DEPARTMENT OF TRANSPORTATION

PIER 1
STRUCTURE NO. 100-0107

SHEET 22 OF 28 SHEETS

F.A.P. RTE.	SECTION	COUNTY	TOTAL SHEETS	SHEET NO.
331	(1-4)R-5,RS-2,B-1,B-2,B-3,B-4	WILLIAMSON	519	268
		CONTRACT NO. 78373		
		ILLINOIS FED. AID PROJECT		

Notes:

Pour steps monolithically with cap. See sheet 24 of 28 for additional pier details and Bill of Material.
Space reinforcement in cap to miss anchor bolts.
For details of piles, see sheet 25 of 28.
Bars indicated thus 23 X 2 – #5 etc. indicates 23 lines of bars with 2 lengths per line.

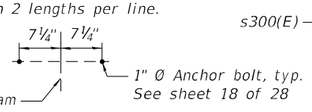

DETAIL B

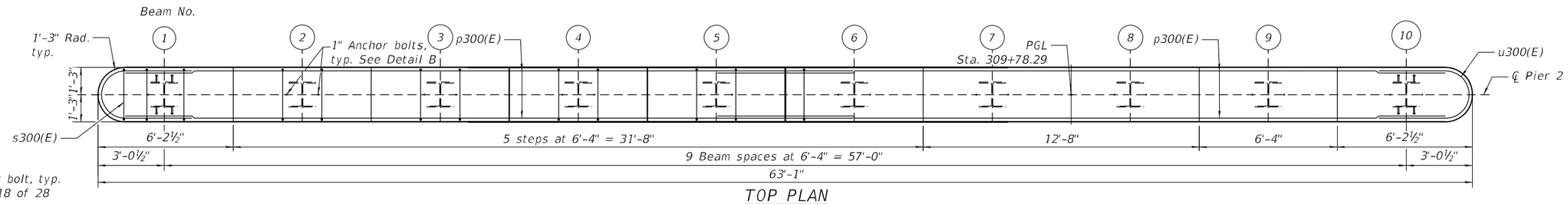

TOP PLAN

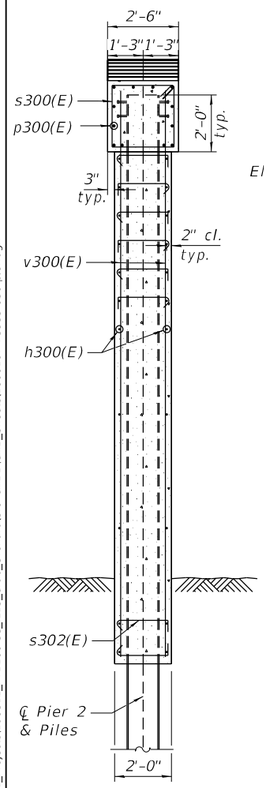

SECTION D-D

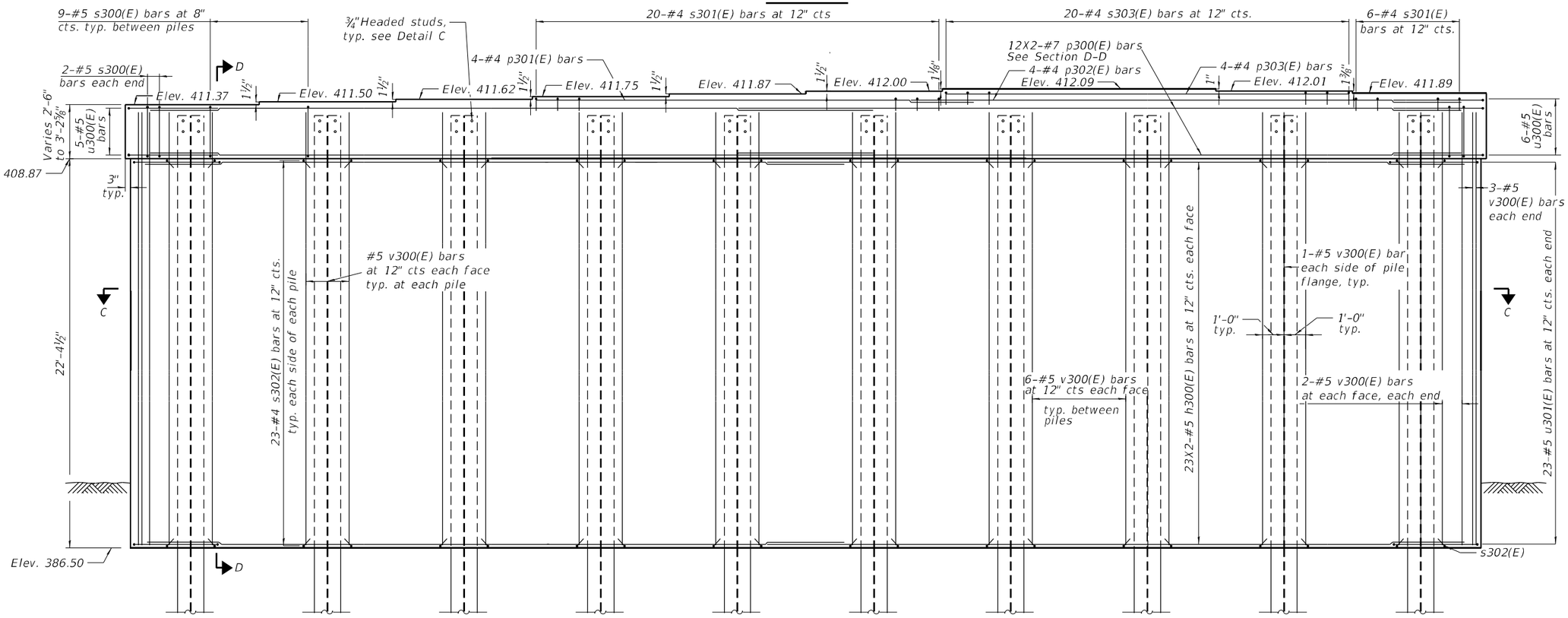

ELEVATION

MINIMUM LAP LENGTH

#4 bar = 2'-11"
#5 bar = 3'-7"
#7 bar = 6'-3"

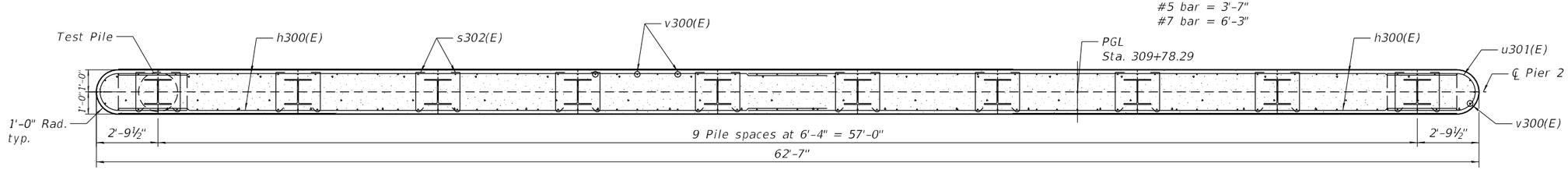

SECTION C-C

PILE DATA

Type: Steel HP14x89 with pile shoes
Nominal Required Bearing: 672 kips
Factored Resistance Available: 345 kips
Est. Length: 66'
No. Req'd: 9
Test Pile: 1

Michael Baker INTERNATIONAL
200 W Adams Street
Suite 1800
Chicago, IL 60606
PH: 312.707.8770
FAX: 312.707.8804

USER NAME =	DESIGNED - AMR	REVISED -	
	CHECKED - MLK	REVISED -	
PLOT SCALE =	DRAWN - FS	REVISED -	
PLOT DATE =	CHECKED - AMR	REVISED -	

STATE OF ILLINOIS
DEPARTMENT OF TRANSPORTATION

PIER 2
STRUCTURE NO. 100-0107

SHEET 23 OF 28 SHEETS

F.A.P. RTE.	SECTION	COUNTY	TOTAL SHEETS	SHEET NO.
331	(1-4)R-5,RS-2,B-1,B-2,B-3,B-4	WILLIAMSON	519	269
		CONTRACT NO. 78373		
		ILLINOIS FED. AID PROJECT		

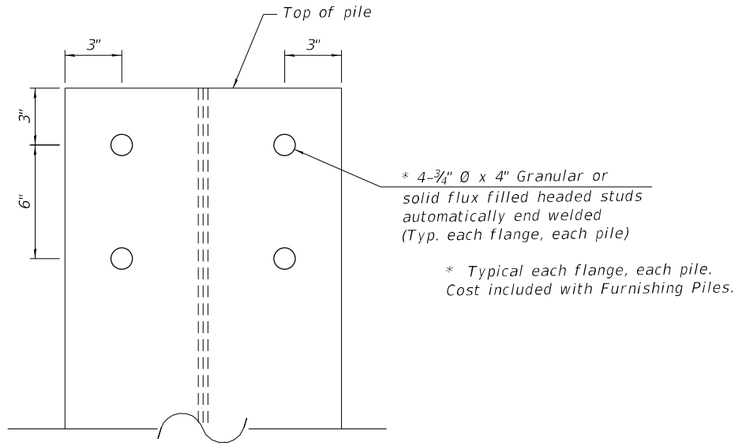

DETAIL C

PIER 1
BILL OF MATERIAL

Bar	No.	Size	Length	Shape
h200(E)	92	#5	32'-11"	
p200(E)	24	#7	33'-5"	
p201(E)	4	#4	20'-4"	
p202(E)	4	#4	25'-5"	
p203(E)	4	#4	18'-8"	
s200(E)	85	#5	9'-7"	
s201(E)	26	#4	3'-10"	
s202(E)	460	#4	2'-6"	
s203(E)	20	#4	4'-4"	
u200(E)	11	#5	9'-5"	
u201(E)	46	#5	10'-4"	
v200(E)	142	#5	24'-5"	
Cofferdam Excavation			Cu Yd	296
Cofferdam (Type 2) (Location - 1)			Each	1
Concrete Structures			Cu Yd	120.2
Seal Coat Concrete			Cu Yd	118
Reinforcement Bars, Epoxy Coated			Pound	10,940
Furnishing Steel Piles HP14X89			Foot	594
Driving Piles			Foot	594
Test Pile Steel HP14X89			Each	1
Pile Shoes			Each	10

PIER 2
BILL OF MATERIAL

Bar	No.	Size	Length	Shape
h300(E)	92	#5	32'-11"	
p300(E)	24	#7	33'-5"	
p301(E)	4	#4	20'-4"	
p302(E)	4	#4	25'-5"	
p303(E)	4	#4	18'-8"	
s300(E)	85	#5	9'-7"	
s301(E)	26	#4	3'-10"	
s302(E)	460	#4	2'-6"	
s303(E)	20	#4	4'-4"	
u300(E)	11	#5	9'-5"	
u301(E)	46	#5	10'-4"	
v300(E)	142	#5	24'-5"	
Cofferdam Excavation			Cu Yd	296
Cofferdam (Type 2) (Location - 2)			Each	1
Concrete Structures			Cu Yd	120.1
Seal Coat Concrete			Cu Yd	118
Reinforcement Bars, Epoxy Coated			Pound	10,940
Furnishing Steel Piles HP14X89			Foot	594
Driving Piles			Foot	594
Test Pile Steel HP14X89			Each	1
Pile Shoes			Each	10

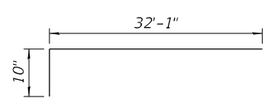

BAR h200(E)
BAR h300(E)

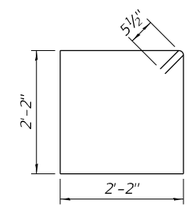

BAR s200(E)
BAR s300(E)

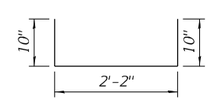

BAR s201(E)
BAR s301(E)

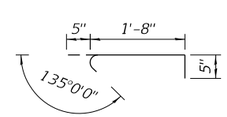

BAR s202(E)
BAR s302(E)

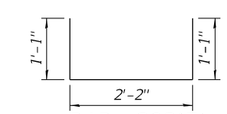

BAR s203(E)
BAR s303(E)

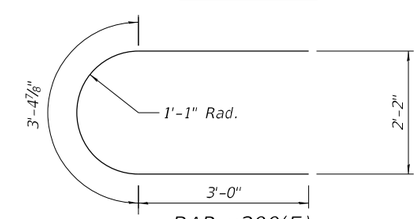

BAR u200(E)
BAR u300(E)

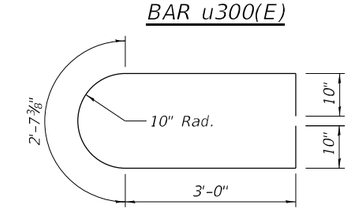

BAR u201(E)
BAR u301(E)

MODEL: Sheet
FILE NAME: pw:\\mb-us-pw.bentley.com:mb-us-pw-03\Documents\Chicago_IL\01_Projects\190812_PTB200-38_IL13_Crab_Orchard\5.0 CADD\CAD_Sheets\1000107-78383-031-pier.dgn

Michael Baker INTERNATIONAL
200 W Adams Street
Suite 1800
Chicago, IL 60606
PH: 312.707.8770
FAX: 312.707.8804

USER NAME =	DESIGNED - AMR	REVISED -	
	CHECKED - MLK	REVISED -	
PLOT SCALE =	DRAWN - FS	REVISED -	
PLOT DATE =	CHECKED - AMR	REVISED -	

STATE OF ILLINOIS
DEPARTMENT OF TRANSPORTATION

PIER DETAILS
STRUCTURE NO. 100-0107

SHEET 24 OF 28 SHEETS

F.A.P. RTE.	SECTION	COUNTY	TOTAL SHEETS	SHEET NO.
331	(1-4)R-5,RS-2,B-1,B-2,B-3,B-4	WILLIAMSON	519	270
		CONTRACT NO. 78373		
		ILLINOIS FED. AID PROJECT		

2/14/2025 2:08:31 PM

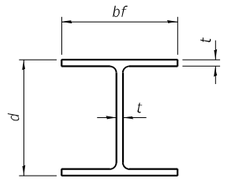

STEEL PILE TABLE

Designation	Depth d	Flange width bf	Web and Flange thickness t	Encasement diameter A
HP 18x181	18	18	1	36"
x157	17¾"	17⅞"	⅞"	36"
x135	17½"	17¾"	¾"	36"
HP 16x183	16½"	16½"	1⅛"	36"
x162	16¼"	16⅛"	1"	36"
x141	16	16	⅞"	36"
x121	15¾"	15⅞"	¾"	36"
HP 14x117	14¼"	14⅞"	13/16"	30"
x102	14"	14¾"	11/16"	30"
x89	13⅞"	14¾"	⅝"	30"
x73	13⅜"	14⅜"	½"	30"
HP 12x84	12¼"	12¼"	11/16"	24"
x74	12⅛"	12¼"	⅝"	24"
x63	12"	12⅛"	½"	24"
x53	11¾"	12"	7/16"	24"
HP 10x57	10"	10¼"	9/16"	24"
x42	9¾"	10⅛"	7/16"	24"
HP 8x36	8"	8⅛"	7/16"	18"

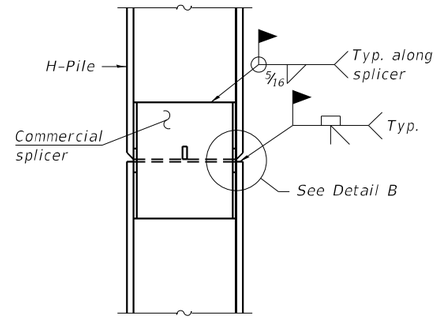

ELEVATION

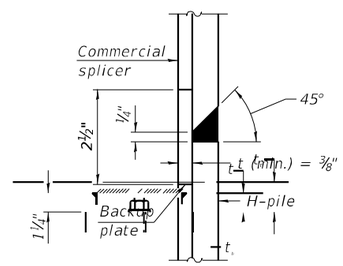

DETAIL B

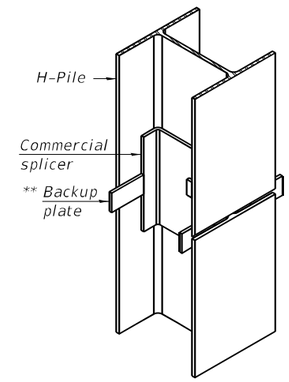

ISOMETRIC VIEW

WELDED COMMERCIAL SPLICE

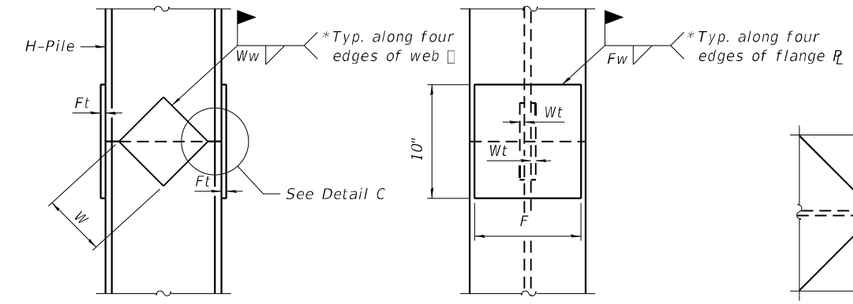

ELEVATION END VIEW DETAIL C

Designation	F	Ft	Fw	W	Wt	Ww
HP 18x181	15½"	1½"	1"	9½"	⅞"	¾"
x157	15¼"	1¼"	1"	9½"	⅞"	¾"
x135	15¼"	1¼"	1"	9½"	⅞"	¾"
HP 16x183	13¾"	1½"	1"	8¼"	⅞"	¾"
x162	13½"	1½"	1"	8¼"	¾"	⅝"
x141	13½"	1¼"	⅞"	8¼"	¾"	⅝"
x121	13½"	1¼"	⅞"	8¼"	¾"	⅝"
HP 14x117	12½"	1¼"	⅞"	7¾"	⅝"	½"
x102	12½"	1"	¾"	7¾"	⅝"	½"
x89	12½"	⅞"	11/16"	7¾"	⅝"	½"
x73	12½"	¾"	9/16"	7¾"	⅝"	½"
HP 12x84	10"	1"	11/16"	6½"	⅝"	½"
x74	10"	⅞"	11/16"	6½"	⅝"	½"
x63	10"	¾"	½"	6½"	½"	⅜"
x53	10"	¾"	½"	6½"	½"	⅜"
HP 10x57	8"	⅞"	9/16"	5¼"	½"	⅜"
x42	8"	¾"	9/16"	5¼"	½"	⅜"
HP 8x36	6¾"	⅝"	7/16"	4"	½"	⅜"

WELDED PLATE FIELD SPLICE

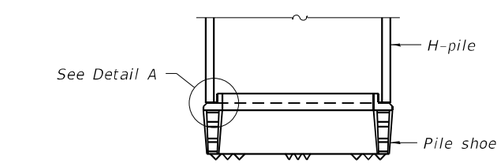

ELEVATION

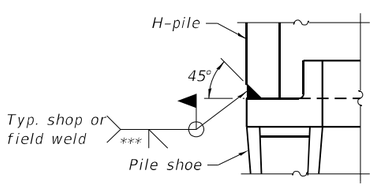

DETAIL A

SHOE ATTACHMENT

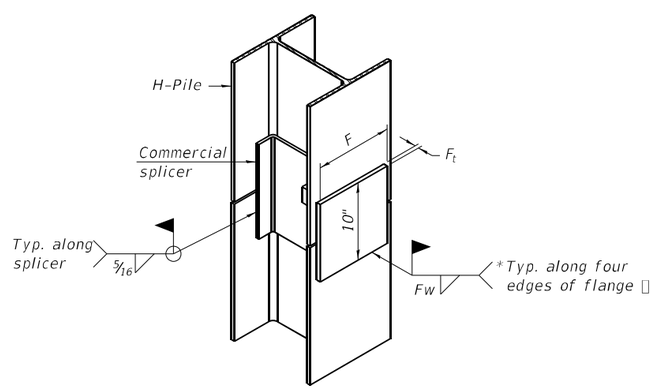

ISOMETRIC VIEW

WELDED COMMERCIAL SPLICE ALTERNATE

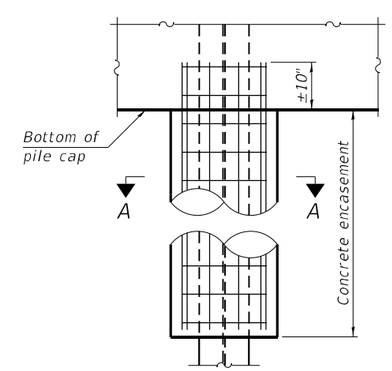

ELEVATION

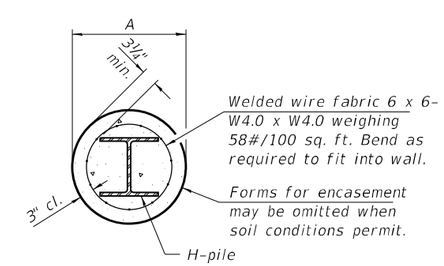

SECTION A-A

INDIVIDUAL PILE CONCRETE ENCASEMENT
(when specified)

Note:
The steel H-piles shall be according to AASHTO M270 Grade 50.

* Interrupt welds ¼" from end of web and/or each flange.

** Remove portions of backup plates that extend outside the flanges.

*** Weld size per pile shoe manufacturer (5/16" min.).

F-HP 10-27-2023

MODEL: Default
FILE NAME: C:\Users\jschreckenberg\Downloads\107\100-0107-78373-025-HP Pile Details.dgn
2/19/2025 1:45:04 PM

CDI CIVIL DESIGN, INC. WBE / DBE EFFINGHAM, IL LICENSE #184.003222

USER NAME =	DESIGNED – JAG	REVISED –	
	CHECKED – JGS	REVISED –	
PLOT SCALE =	DRAWN – JAG	REVISED –	
PLOT DATE =	CHECKED – JGS	REVISED –	

STATE OF ILLINOIS
DEPARTMENT OF TRANSPORTATION

HP PILE DETAILS
STRUCTURE NO. 100-0107
SHEET 25 OF 28 SHEETS

F.A.P. RTE.	SECTION	COUNTY	TOTAL SHEETS	SHEET NO.
331	(1-4)R-5,RS-2,B-1,B-2,B-3,B-4	WILLIAMSON	519	271
		CONTRACT NO. 78373		
	ILLINOIS	FED. AID PROJECT		

Illinois Department of Transportation
Division of Highways
District 9

ROCK CORE LOG

Date 6/17/14

ROUTE FAP 331 (IL 13) **DESCRIPTION** IL 13 WB over Crab Orchard Lake **LOGGED BY** L. Estel

SECTION 5-B1 **LOCATION** 0.2 miles W of Cambria Road (near E Abut.), **SEC.** 17, **TWP.** 9S, **RNG.** 1E, **PM**

COUNTY Williamson **CORING METHOD** Conventional rotary with water

STRUCT. NO. 100-0066
Station 309+50

CORING BARREL TYPE & SIZE NV3 5FT NWJ

Core Diameter 1.78 in
Top of Rock Elev. 350.70 ft
Begin Core Elev. 349.70 ft

BORING NO. 1-S
Station 310+32
Offset 14.0ft Lt CL WB
Ground Surface Elev. 415.2 ft

	DEPTH (ft)	CORE (#)	RECOVERY (%)	R.Q.D. (%)	CORE TIME (min/ft)	STRENGTH (tsf)
V. Dense Grey and Black, Dry SANDSTONE with SHALE layers		1	97	16		
						356.7
						344.5
	-70					
344.70						
V. Dense Grey and Black, Dry SANDSTONE with SHALE layers		2	100	37		
	-75					248.8
339.70						
	-80					
	-85					

Color pictures of the cores Yes, attached
Cores will be stored for examination until 5 Years after Construction
The "Strength" column represents the uniaxial compressive strength of the core sample (ASTM D-2938)
RQD is the ratio of the total length of sound core specimens >4" to total length of core run

BBS, form 138 (Rev. 8-99)

ROCK CORE 100-0066 IL 13 WB OVER CRAB ORCHARD LAKE.GPJ DOTEMPLT.GDT 4/14/21

MODEL: Default
FILE NAME: C:\Users\schreckenberg\Downloads\107 100-0107-78373-026-BoringLogs.dgn

CDI CIVIL DESIGN, INC. WBE / DBE EFFINGHAM, IL LICENSE #184.003222

USER NAME =	DESIGNED – JAG	REVISED –	
	CHECKED – JGS	REVISED –	
PLOT SCALE =	DRAWN – JAG	REVISED –	
PLOT DATE =	CHECKED – JGS	REVISED –	

STATE OF ILLINOIS
DEPARTMENT OF TRANSPORTATION

BORING LOGS - E. ABUT.
STRUCTURE NO. 100-0107

SHEET 26 OF 28 SHEETS

F.A.P. RTE.	SECTION	COUNTY	TOTAL SHEETS	SHEET NO.
331	(1-4)R-5,RS-2,B-1,B-2,B-3,B-4	WILLIAMSON	519	272

CONTRACT NO. 78373

ILLINOIS FED. AID PROJECT

2/13/2025 6:56:13 AM

Illinois Department of Transportation
Division of Highways
District 9

SOIL BORING LOG

Date 6/17/14

ROUTE FAP 331 (IL 13) DESCRIPTION IL 13 WB over Crab Orchard Lake LOGGED BY L. Estel

SECTION 5-B1 LOCATION 0.2 miles W of Cambria Road (near E Abut.), SEC. 17, TWP. 9S, RNG. 1E, PM

COUNTY Williamson DRILLING METHOD Hollow Stem Auger (8" O.D., 3.25" I.D.) HAMMER TYPE Auto SPT 140 lbs

STRUCT. NO. 100-0066
Station 309+50

BORING NO. 1-S
Station 310+32
Offset 14.0ft Lt CL WB
Ground Surface Elev. 415.2 ft

Surface Water Elev. 405.5 ft
Stream Bed Elev. ft

Groundwater Elev.:
First Encounter 380.2 ft
Upon Completion ft
After Hrs. ft

Description	Elev.	DEPTH (ft)	BLOWS	UCS Qu (tsf)	MOIST (%)
Cored Pavement, HMA over Crushed AGGREGATE	413.70				
V. Stiff Brown, Moist CLAY			1		
			2 2	2.5 B	19
		-5	1		
			3 4	2.3 B	18
			1		
			3 4	2.5 B	18
		-10	1		
			4 4	2.5 B	20
			1		
			3 4	2.0 B	21
		-15	1		
			3 5	2.7 B	18
Stiff Brown and Grey, Moist CLAY	398.20		1		
			3 5	1.7 S	19
		-20	1		
Stiff Brown and Grey, Moist CLAY *(continued)*			3 4	1.6 B	19
			1		
			3 4	1.9 B	19
		-25	1		
			2 4	1.3 B	19
			1		
			2 3	1.5 B	24
Stiff Grey, Moist to V. Moist SILT LOAM SAND 9%, SILT 74%, CLAY 17%, LL 28, PI 9 (estimated based on visual ID and historical database)	385.70	-30	1		
			1 4	1.7 S	21
Stiff Grey and mottled Brown, Moist to V. Moist SILTY CLAY to SILTY CLAY LOAM SAND 9%, SILT 70%, CLAY 21%, LL 31, PI 11 (estimated based on visual ID and historical database)	383.20		1		
			1 2	1.1 B	25
Medium Grey and mottled Brown, V. Moist SILTY CLAY LOAM	380.70	-35	1		
			2 2	1.0 B	24
V. Soft Grey and mottled Brown, Wet SILTY CLAY LOAM	378.20		WOH WOH 1	0.1 B	30
	375.70	-40	1		

The Unconfined Compressive Strength (UCS) Failure Mode is indicated by (B-Bulge, S-Shear, P-Penetrometer, E-Estimated)
Abbreviations W.O.H - Sampler Advanced By Weight of Hammer, W.O.P - Advanced by Weight of Pipe, B.S. - Before Seating
The SPT (N value) is the sum of the last two blow values in each sampling zone (AASHTO T206) BBS, from 137 (Rev. 8-99)

File Name S:\MATERIALS GEOTECHNICAL UNIT\GINT\PROJECTS\PROJECTS FILE\WILLIAMSON\STRUCTURES\100-0066 IL 13 WB OVER CRAB ORCHARD LAKE\100-0066 IL 13 WB OVER CRAB ORCHARD LAKE.GPJ Data Template D6TEMPLT.GDT Date Printed 4/14/21
Latitude Longitude Datum NAD83 Job Number

Illinois Department of Transportation
Division of Highways
District 9

SOIL BORING LOG

Date 6/17/14

ROUTE FAP 331 (IL 13) DESCRIPTION IL 13 WB over Crab Orchard Lake LOGGED BY L. Estel

SECTION 5-B1 LOCATION 0.2 miles W of Cambria Road (near E Abut.), SEC. 17, TWP. 9S, RNG. 1E, PM

COUNTY Williamson DRILLING METHOD Hollow Stem Auger (8" O.D., 3.25" I.D.) HAMMER TYPE Auto SPT 140 lbs

STRUCT. NO. 100-0066
Station 309+50

BORING NO. 1-S
Station 310+32
Offset 14.0ft Lt CL WB
Ground Surface Elev. 415.2 ft

Surface Water Elev. 405.5 ft
Stream Bed Elev. ft

Groundwater Elev.:
First Encounter 380.2 ft
Upon Completion ft
After Hrs. ft

Description	Elev.	DEPTH (ft)	BLOWS	UCS Qu (tsf)	MOIST (%)
V. Stiff Grey and mottled Brown, Moist CLAY *(continued)*			3 4	2.9 B	24
	370.70	-45	1		
Stiff Grey and mottled Brown, Moist CLAY			2 3	1.8 S	29
	365.20	-50	1		
Medium Grey, Moist to V. Moist CLAY			1 2	1.0 B	43
	360.70	-55	WOH		
Soft Grey, V. Moist CLAY			1 1	0.3 B	24
	355.70	-60	WOH		
Medium Grey, V. Moist CLAY					
Medium Grey, V. Moist CLAY *(continued)*			WOH 1	0.6 B	22
	350.70	-65	100/8"		
V. Dense Grey, Dry SANDSTONE with some CLAY SHALE					
(Borehole continued with rock coring.)					
Bottom of hole @ 75.5 feet					
Ground Surface Elevation Referenced to BM at NW corner of SN 100-0018; Elev. 416.6		-70			
Hammer Efficiency = 75% (To convert "N" values to "N60", multiply by 1.25)		-75			
		-80			

The Unconfined Compressive Strength (UCS) Failure Mode is indicated by (B-Bulge, S-Shear, P-Penetrometer, E-Estimated)
Abbreviations W.O.H - Sampler Advanced By Weight of Hammer, W.O.P - Advanced by Weight of Pipe, B.S. - Before Seating
The SPT (N value) is the sum of the last two blow values in each sampling zone (AASHTO T206) BBS, from 137 (Rev. 8-99)

File Name S:\MATERIALS GEOTECHNICAL UNIT\GINT\PROJECTS\PROJECTS FILE\WILLIAMSON\STRUCTURES\100-0066 IL 13 WB OVER CRAB ORCHARD LAKE\100-0066 IL 13 WB OVER CRAB ORCHARD LAKE.GPJ Data Template D6TEMPLT.GDT Date Printed 4/14/21
Latitude Longitude Datum NAD83 Job Number

Illinois Department of Transportation
Division of Highways
District 9

SOIL BORING LOG

Date 9/19/14

ROUTE FAP 331 (IL 13) DESCRIPTION IL 13 WB over Crab Orchard Lake LOGGED BY L. Estel

SECTION 5-B1 LOCATION 0.2 miles W of Cambria Road (near W Abut.), SEC. 17, TWP. 9S, RNG. 1E, PM

COUNTY Williamson DRILLING METHOD Hollow Stem Auger (8" O.D., 3.25" I.D.) HAMMER TYPE Auto SPT 140 lbs

STRUCT. NO. 100-0066
Station 309+50

BORING NO. 2-S
Station 308+65
Offset 14.0ft Lt CL WB
Ground Surface Elev. 415.2 ft

Surface Water Elev. 405.5 ft
Stream Bed Elev. ft

Groundwater Elev.:
First Encounter 380.7 ft
Upon Completion ft
After Hrs. ft

Description	Elev.	DEPTH (ft)	BLOWS	UCS Qu (tsf)	MOIST (%)
Cored Pavement, HMA over Crushed AGGREGATE	413.70				
Stiff Brown, Moist CLAY	410.70		1		
			1 2	1.4 B	22
V. Stiff Brown and Grey, Moist CLAY	408.20	-5	1		
			2 3	2.3 B	25
Stiff Brown, Moist CLAY to SILTY CLAY			1		
			1 2	1.6 B	16
		-10	1		
			2 3	1.7 B	21
			1		
			2 3	1.3 B	21
		-15	1		
			2 3	1.5 B	21
			1		
			2 3	1.5 B	20
		-20	1		
Stiff Brown, Moist CLAY to SILTY CLAY *(continued)*	390.20	-25	2 3	1.9 B	21
			1		
			2 4	1.9 B	19
			1		
V. Stiff Grey, Moist CLAY	388.20		3 5	2.5 B	19
			1		
Stiff Grey, Moist CLAY	385.70		2 3	1.2 B	21
		-30	1		
Medium Grey, V. Moist SILTY CLAY to SILTY CLAY LOAM	383.20		1 1	0.6 B	29
			WOH		
Soft Grey, V. Moist CLAY	380.70		WOH WOH	0.3 B	25
		-35	1		
Soft Grey and mottled Brown, V. Moist SILTY CLAY	378.20		WOH 1	0.4 B	29
			1 1 1	1.0 B	26
Medium Grey and mottled Brown, Moist to V. Moist SILTY CLAY LOAM	375.70	-40	1		

The Unconfined Compressive Strength (UCS) Failure Mode is indicated by (B-Bulge, S-Shear, P-Penetrometer, E-Estimated)
Abbreviations W.O.H - Sampler Advanced By Weight of Hammer, W.O.P - Advanced by Weight of Pipe, B.S. - Before Seating
The SPT (N value) is the sum of the last two blow values in each sampling zone (AASHTO T206) BBS, from 137 (Rev. 8-99)

File Name S:\MATERIALS GEOTECHNICAL UNIT\GINT\PROJECTS\PROJECTS FILE\WILLIAMSON\STRUCTURES\100-0066 IL 13 WB OVER CRAB ORCHARD LAKE\100-0066 IL 13 WB OVER CRAB ORCHARD LAKE.GPJ Data Template D6TEMPLT.GDT Date Printed 4/14/21
Latitude Longitude Datum NAD83 Job Number

Illinois Department of Transportation
Division of Highways
District 9

SOIL BORING LOG

Date 9/19/14

ROUTE FAP 331 (IL 13) DESCRIPTION IL 13 WB over Crab Orchard Lake LOGGED BY L. Estel

SECTION 5-B1 LOCATION 0.2 miles W of Cambria Road (near W Abut.), SEC. 17, TWP. 9S, RNG. 1E, PM

COUNTY Williamson DRILLING METHOD Hollow Stem Auger (8" O.D., 3.25" I.D.) HAMMER TYPE Auto SPT 140 lbs

STRUCT. NO. 100-0066
Station 309+50

BORING NO. 2-S
Station 308+65
Offset 14.0ft Lt CL WB
Ground Surface Elev. 415.2 ft

Surface Water Elev. 405.5 ft
Stream Bed Elev. ft

Groundwater Elev.:
First Encounter 380.7 ft
Upon Completion ft
After Hrs. ft

Description	Elev.	DEPTH (ft)	BLOWS	UCS Qu (tsf)	MOIST (%)
V. Stiff Grey and mottled Brown, Moist CLAY *(continued)*	370.70		2 3	2.3 S	35
Stiff Grey and mottled Brown, Moist CLAY	365.20	-45	1		
			2 2	1.6 B	48
		-50	WOH		
Stiff Brown, Moist SILTY CLAY to CLAY	360.70		1 1	1.6 B	42
		-55	WOH		
Medium Grey, V. Moist CLAY			WOH WOH	0.6 B	28
		-60	WOH		
Medium Grey, V. Moist CLAY *(continued)*	351.20		1 2	0.8 B	24
Hard Grey, Dry Weathered CLAY SHALE	350.20	-65	18		
Hard Grey, Dry CLAY SHALE		-70	100/3"		
Bottom of hole @ 65.3 feet		-75			
		-80			

Ground Surface Elevation referenced to BM at NW corner of SN 100-0018; Elev. 416.6

Hammer Efficiency = 75% (To convert "N" values to "N60", multiply by 1.25)

The Unconfined Compressive Strength (UCS) Failure Mode is indicated by (B-Bulge, S-Shear, P-Penetrometer, E-Estimated)
Abbreviations W.O.H - Sampler Advanced By Weight of Hammer, W.O.P - Advanced by Weight of Pipe, B.S. - Before Seating
The SPT (N value) is the sum of the last two blow values in each sampling zone (AASHTO T206) BBS, from 137 (Rev. 8-99)

File Name S:\MATERIALS GEOTECHNICAL UNIT\GINT\PROJECTS\PROJECTS FILE\WILLIAMSON\STRUCTURES\100-0066 IL 13 WB OVER CRAB ORCHARD LAKE\100-0066 IL 13 WB OVER CRAB ORCHARD LAKE.GPJ Data Template D6TEMPLT.GDT Date Printed 4/14/21
Latitude Longitude Datum NAD83 Job Number

Bench Mark: "B" cut in S.W. corner of N. hubguard, 13' Lt. Sta. 308+82 Elev. 416.03

Existing Structure: #100-0019 Built in 1939 as S.B.I. Rte. 13, Sec.5-B1 and 5-A1 is a 133'-6" bk. to bk. three span bridge. The existing concrete deck has an out to out width of 31'-8" and is supported on 6 continuous steel wf beams. The existing superstructure is supported by 4 pile bents. The existing substructure caps and superstructure shall be removed totally. An entirely new superstructure, abutments and pier caps shall be constructed which will require additional piles for the piers and all new piles for abutments. Traffic shall be detoured. No salvage.

STATE OF ILLINOIS
DEPARTMENT OF TRANSPORTATION

DISTRICT NO.	SECTION	COUNTY	TOTAL SHEETS	SHEET NO.
F.A.P. RTE. 410	4	WILLIAMSON	42	17

SHEET NO. 10 / 13 SHEETS

F.A.P. RTE. 410 SECTION (5B-1)DDR-(DR-DN-1)

This portion of embankment backfill by bridge contractor after structure is in place.

STATION 309+50.00
BUILT 19 BY
STATE OF ILLINOIS
F.A. RT. 410 SEC. (5B-DDR
F.A. PROJ. F-410-2(10)
LOADING HS 20
STR. NO. 100-0066

NAME PLATE
See Std. 2113

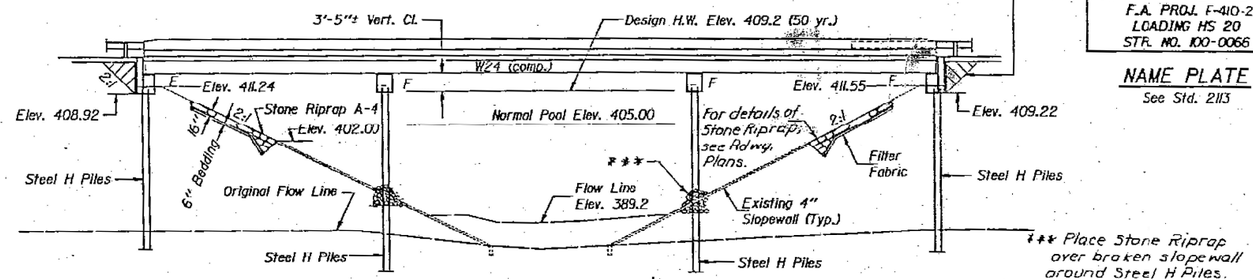

ELEVATION

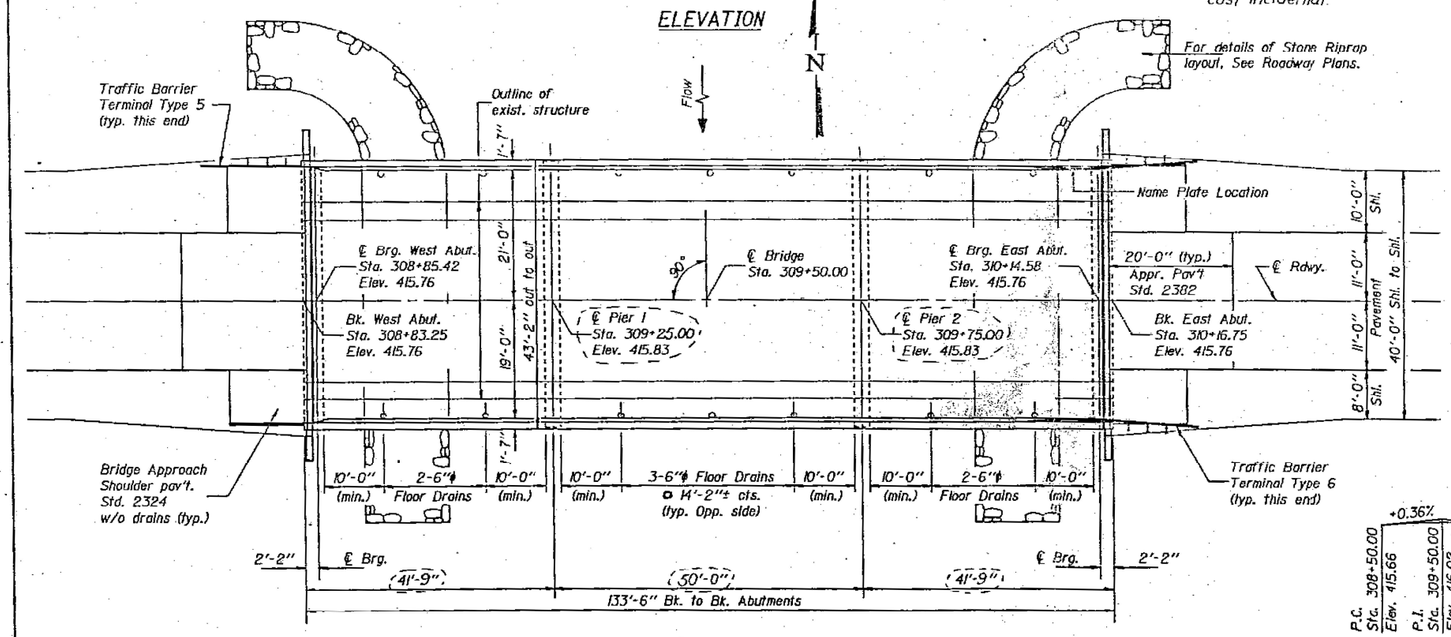

PLAN

Boring #1 located ±83' right of ℄ Bridge at Sta. 308+88.00

Boring #2 located ±59' right of ℄ Bridge at Sta. 309+24.50

Boring #3 located ±81' right of ℄ Bridge at Sta. 309+75.50

Boring #4 located ±92' right of ℄ Bridge at Sta. 309+96.00

GENERAL NOTES

See Proposal for boring data.

Fasteners shall be high strength bolts. Bolts 7/8"ϕ, open holes 15/16"ϕ, unless otherwise noted.

Calculated weight of Structural Steel = 63,040 Lbs. (M 223, Grade 50), 20,340 Lbs. (M 183)

The Zinc-silicate and vinyl paint system shall be used for shop and field painting of Structural Steel except where otherwise noted.

Field welding of construction accessories will not be permitted to the bottom flange of beams nor to the top flange for a distance equal to one-fourth the span length each way from the pier supports. Field welding in other areas will be permitted only when approved by the Engineer.

Anchor bolts shall be set before bolting diaphragms over supports.

The main load carrying member components subject to tensile stress shall conform to the Supplemental Requirements for Notch Toughness Zone 2. These components are the wide flange beams and all splice plate material.

Reinforcement bars shall conform to the requirements of AASHTO M-31, M-42 or M-53 Grade 60.

Layout of stone riprap may be varied in the field to suit ground conditions as directed by the Engineer.

Plan dimensions and details relative to existing structure have been taken from existing plans and are subject to nominal construction variations. It shall be the Contractor's responsibility to verify such dimensions and details in the field and make necessary approved adjustments prior to construction or ordering of materials. Such variations shall not be cause for additional compensation for a change in the scope of the work, however, the Contractor will be paid for the quantity actually furnished at the unit price bid for the work.

Bearing seat surfaces shall be constructed or adjusted to the designated elevations within a tolerance of 1/8 inch. Adjustment shall be made either by grinding the surface or by shimming the bearing. Two 1/8" adjusting shims, of the dimensions of the bottom bearing plate, shall be provided for each bearing in addition to all other plates or shims.

The contractor shall drive, in a permanent location, one steel HP10 x 42 test pile at Pier 1 as directed by the Engineer before ordering the remainder of piles.

Tightening and inspection of all high strength bolt connections shall conform to the requirements of the latest issue of the Specification for Structural Joints using ASTM A325 (M164) or A490 (M253) bolts for slip-critical connections. Except tightening methods using the calibrated wrench is not allowed.

For cantilever forming brackets, see Special Provisions.

The cost of driving piling through the existing slopewall will be considered incidental.

TOTAL BILL OF MATERIAL

Item	Unit	Super	Sub	Total
* Removal of Existing Structures	Each			1
Structure Excavation	Cu. Yd.		(87)	(87)
Floor Drains	Each	14		14
Preformed Joint Seal (1 3/4")	Lin. Ft.	43		43
Preformed Joint Seal (4")	Lin. Ft.	43		43
Protective Coat	Sq. Yd.	107		107
Elastomeric Bearing Assembly, Type II	Each	7		7
Class X Concrete	Cu. Yd.		(81.6)	(81.6)
Class X Concrete Superstructure	Cu. Yd.	155.3		155.3
Structural Steel	Lump Sum	1		1
Stud Shear Connectors	Each	2492		2492
Reinforcement Bars	Pound		(8240)	(8240)
Reinforcement Bars, Epoxy Coated	Pound	39,190		39,190
Steel Piles HP10 x 42	Lin. Ft.		(1094)	(1094)
Test Pile Steel HP10 x 42	Each		1	1
Name Plates	Each	1		1
Stone Riprap Class A-4	Sq. Yd.			415
Slopewall Removal	Sq. Yd.			315
Filter Fabric For Use With Riprap	Sq. Yd.			415

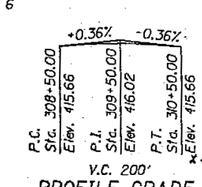

PROFILE GRADE

* Existing piles shall remain in place undamaged at piers.
** See Rdwy. Plans

WATERWAY INFORMATION

Drainage Area = 1.4 sq. mi. Low Grade Elev. 414.03 @ Sta. 315+00.00

Flood	Freq. Yr.	Q C.F.S.	Opening Sq. Ft. Exist.	Opening Sq. Ft. Prop.	Nat. H.W.E.	Head - Ft. Exist.	Head - Ft. Prop.	Headwater El. Exist.	Headwater El. Prop.
Design	50	810	1388	1388	409.2	0	0	409.2	409.2
Base	100	930	1399	1399	409.3	0	0	409.3	409.3
Overtopping									
Max. Calc.	500	1220	1454	1454	409.8	0	0	409.8	409.8

DESIGN SPECIFICATIONS

1983 AASHTO & 1984, 1985 & 1986 Interims

LOADING HS20-44

Allow 25#/sq. ft. for future wearing surface

DESIGN STRESSES

f'c = 3,500 psi
fy = 60,000 psi (reinf.)
fy = 50,000 psi (M223 Grade 50)

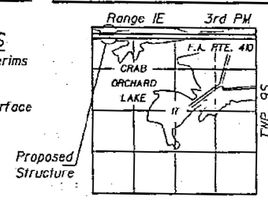

LOCATION SKETCH

GENERAL PLAN
ILL. RTE. 13 WEST BD. LANES
OVER CRAB ORCHARD LAKE
F.A. ROUTE 410 SEC. (5B-1)DDR
WILLIAMSON COUNTY
STATION 309+50.00
STRUCTURE NO. 100-0066

DESIGNED	Mark P. Thornton
CHECKED	Shayla S. Ali (SSA)
DRAWN	JRS Jas
CHECKED	MPT

June 10 1988

EXAMINED Jerry D. Kaspar — ENGINEER OF BRIDGE DESIGN

PASSED James T. Kaufman — ENGINEER OF BRIDGES AND STRUCTURES

APPROVED — DIRECTOR OF HIGHWAYS

REVISED - 11/3/98 - M.P.T.

FOR INFORMATION ONLY

MODEL: Default
FILE NAME: C:\Users\jschreckenberg\Downloads\107 100-0107-78373-029-Existing Structure_GPE.dgn

2/13/2025 7:01:01 AM

CDI CIVIL DESIGN, INC. WBE / DBE EFFINGHAM, IL LICENSE #184.003222

USER NAME =	DESIGNED - JAG	REVISED -	
	CHECKED - JGS	REVISED -	
PLOT SCALE =	DRAWN - JAG	REVISED -	
PLOT DATE =	CHECKED - JGS	REVISED -	

STATE OF ILLINOIS
DEPARTMENT OF TRANSPORTATION

EX. STRUCTURE - GPE
STRUCTURE NO. 100-0107

F.A.P. RTE.	SECTION	COUNTY	TOTAL SHEETS	SHEET NO.
331	(1-4)R-5,RS-2,B-1,B-2,B-3,B-4	WILLIAMSON	519	275

CONTRACT NO. 78373
ILLINOIS FED. AID PROJECT

STATE OF ILLINOIS
DEPARTMENT OF TRANSPORTATION

ROUTE NO.	SECTION	COUNTY	TOTAL SHEETS	SHEET NO.
F.A.P. 410	*	Williamson	42	20
FED. ROAD DIST. NO. 7	ILLINOIS	FED. AID PROJECT-		

SHEET NO. 10
13 SHEETS

* (5B-1) (DR, DR-1)

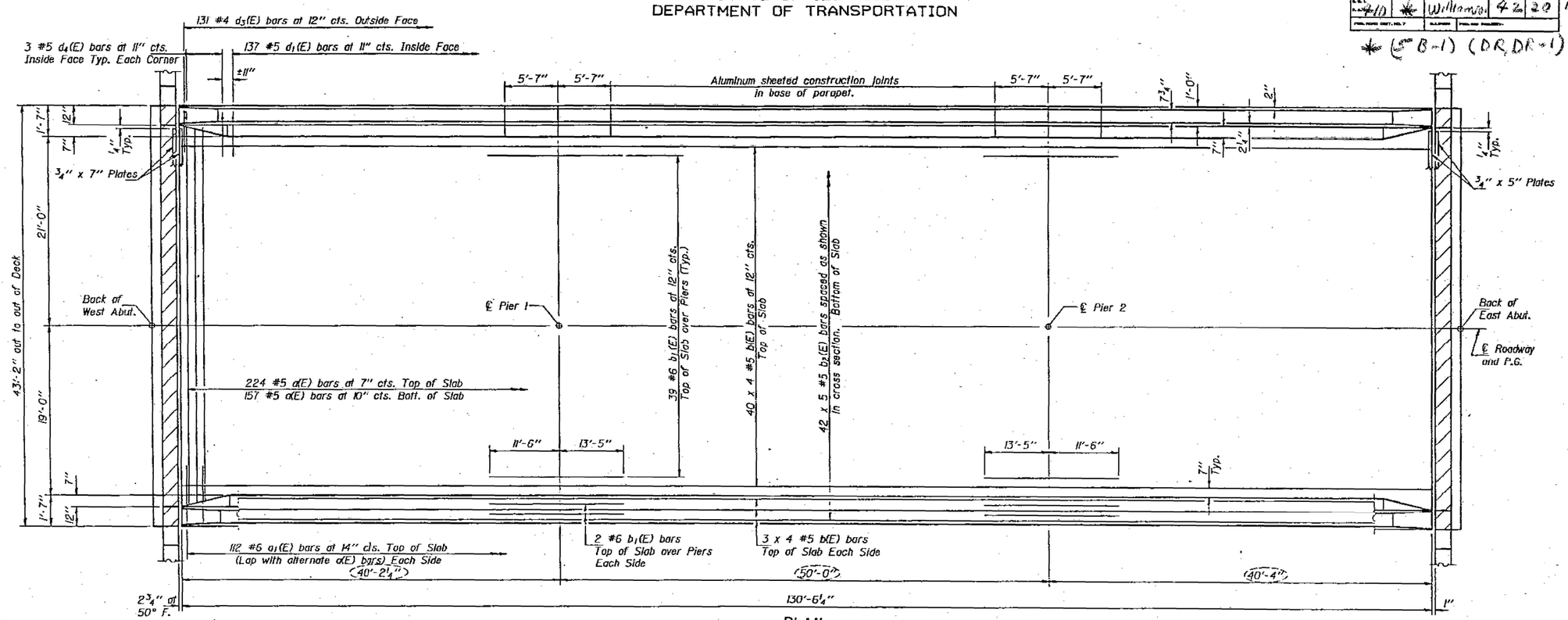

PLAN

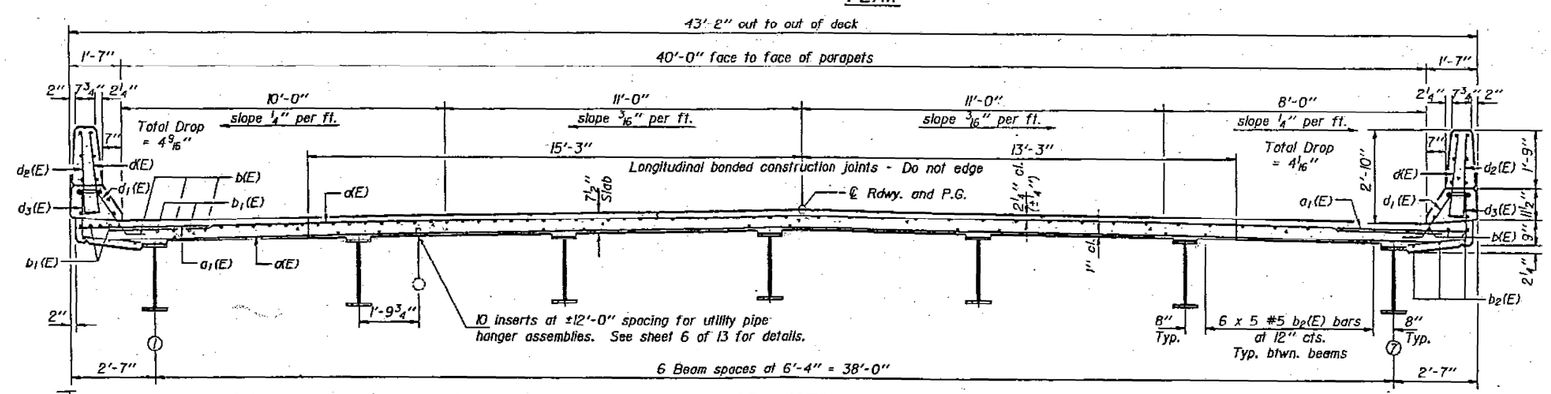

NEAR PIER — CROSS SECTION (Looking East) — NEAR MIDSPAN

Notes: See sheet 5 and 6 of 13 for superstructure details and Bill of Material.
Reinforcement bars designated (E) shall be epoxy coated.
Bars indicated thus 42 x 5 #5 etc. indicates 42 lines of bars with 5 lengths per line.

MIN. BAR LAPS
#5 bars = 1'-8"

DESIGNED	M. P. Turner
CHECKED	Shayla Ali (SD)
DRAWN	Joe Sutherland
CHECKED	MPT

June 10 1988
EXAMINED — ENGINEER OF MODEL DESIGN
PASSED — ENGINEER OF BRIDGE AND STRUCTURES
APPROVED — DIRECTOR OF HIGHWAYS

FOR INFORMATION ONLY

(AS REVISED - 11/3/88 - MPT)
SUPERSTRUCTURE
F.A. RT. 410 SEC. (5B-1)DDR
WILLIAMSON COUNTY
STATION 309+50.00

MODEL: Default
FILE NAME: C:\Users\schreckenberg\Downloads\107-100-0107-78373-030-Existing Structure_Superstructure.dgn
2/13/2025 7:02:03 AM

CDI — CIVIL DESIGN, INC. WBE / DBE — EFFINGHAM, IL — LICENSE #184.003222

USER NAME =	DESIGNED – JAG	REVISED –	
	CHECKED – JGS	REVISED –	
PLOT SCALE =	DRAWN – JAG	REVISED –	
PLOT DATE =	CHECKED – JGS	REVISED –	

STATE OF ILLINOIS
DEPARTMENT OF TRANSPORTATION

EX. STRUCTURE - SUPERSTRUCTURE
STRUCTURE NO. 100-0107

F.A.P. RTE.	SECTION	COUNTY	TOTAL SHEETS	SHEET NO.
331	(1-4)R-5,RS-2,B-1,B-2,B-3,B-4	WILLIAMSON	519	276
		CONTRACT NO. 78373		
		ILLINOIS	FED. AID PROJECT	

STATE OF ILLINOIS
DEPARTMENT OF TRANSPORTATION

ROUTE NO.	SECTION	COUNTY	TOTAL SHEETS	SHEET NO.
410	*	WILLIAMSON	92	21
FED. ROAD DIST. NO. 7	ILLINOIS	FED. AID PROJECT		

SHEET NO. 5a
13 SHEETS

* (5B-1) (DR-DR-1)
Parapet Joint spacing

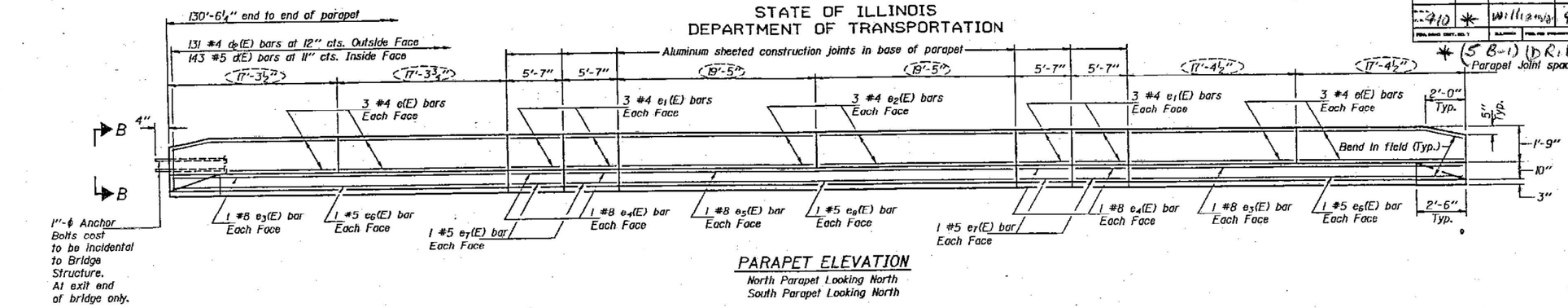

PARAPET ELEVATION

North Parapet Looking North
South Parapet Looking North

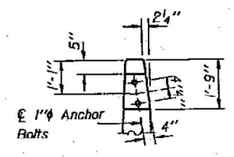

VIEW B-B

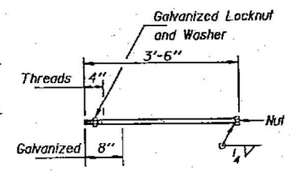

1" ϕ ANCHOR BOLT

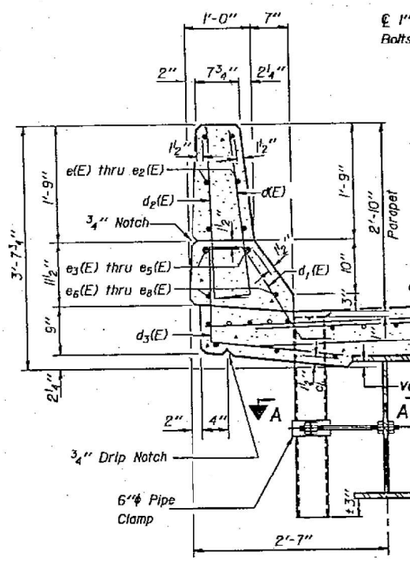

℄ ¾"ϕ x 1'-7" (Min.) Steel Stud Bolts threaded 6" Each End with 2 washers & locknut
15/16"ϕ Holes in web (May be drilled in field.)

SECTION THRU PARAPET

Drain details are typ. for all spans except as shown in Detail "A".
For drain locations see sheet 1 of 13.

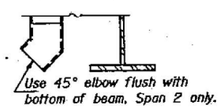

Use 45° elbow flush with bottom of beam, Span 2 only.

DETAIL "A"

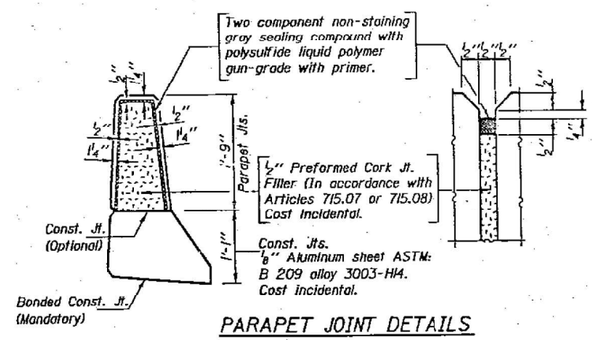

PARAPET JOINT DETAILS

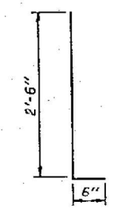

BARS d(E) & d_2(E)

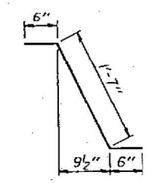

BAR d_1(E)

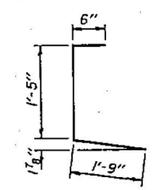

BAR d_3(E)

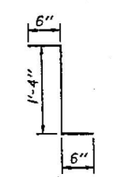

BAR d_4(E)

BILL OF MATERIAL

Bar	No.	Size	Length	Shape
d(E)	381	#5	41'-2"	
a_1(E)	224	#6	4'-0"	
b(E)	184	#5	33'-10"	
b_1(E)	86	#6	24'-11"	
b_2(E)	210	#5	27'-5"	
d(E)	286	#5	3'-0"	L
d_1(E)	274	#5	2'-7"	⅃
d_2(E)	262	#4	3'-0"	L
d_3(E)	262	#4	3'-8"	⊏
d_4(E)	12	#5	2'-4"	L
e(E)	48	#4	(17'-1")	
e_1(E)	48	#4	5'-4"	
e_2(E)	24	#4	(19'-2")	
e_3(E)	8	#8	(34'-5")	
e_4(E)	16	#8	5'-4"	
e_5(E)	4	#8	(38'-7")	
e_6(E)	8	#5	(34'-5")	
e_7(E)	16	#5	5'-4"	
e_8(E)	4	#5	(38'-7")	
Class X Concrete Superstructure			Cu. Yd.	165.3
Reinforcement Bars Epoxy Coated			Pound	39,190

Reinforcement bars designated (E) shall be epoxy coated.

Notes:
The exterior surfaces of the Floor Drain shall be painted with the vinyl enamel coat painting specified for Structural Steel. The exterior surface of the Aluminum tube shall be cleaned and given a washcoat pretreatment in accordance with Steel Structural Painting Council's Spec. SSPC-SP1 and SSPC-Paint 27 prior to painting. Fiberglass to have prewash as per MIL-P-15328 prior to painting.
Fiberglass pipe shall conform to ASTM: D2996, with short-time rupture strength hoop tensile stress of 30,000 p.s.i. minimum.
The surface of the Fiberglass pipe shall be free of bond inhibiting agents.

* Dimension as required by Pipe Clamp

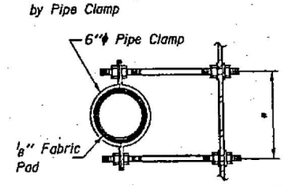

SECTION A-A

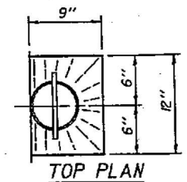

TOP PLAN

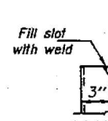

ALUMINUM TUBE

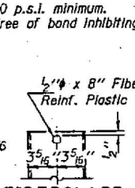

FIBERGLASS PIPE

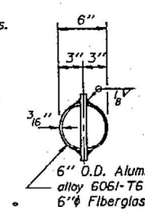

TOP PLAN

(Showing Aluminum Tube)

DESIGNED	Mark P. Thomson
CHECKED	Shayla Ali (S.D)
DRAWN	Joe Sutherland
CHECKED	MPT

June 16 1988

EXAMINED — ENGINEER OF BRIDGE DESIGN
PASSED — ENGINEER OF BRIDGES AND STRUCTURES
APPROVED — DIRECTOR OF HIGHWAYS

S-1-D 12-31-87

(AS REVISED - 11/3/88 - MPT)

SUPERSTRUCTURE DETAILS
F.A. RT. 410 SEC. (5B-1)DR
WILLIAMSON COUNTY
STATION 309+50.00

FOR INFORMATION ONLY

MODEL: Default
FILE NAME: C:\Users\schreckenberg\Downloads\107-100-0107-78373-031-Existing Structure_Superstructure Det.dgn
2/13/2025 7:18:54 AM

CDI — CIVIL DESIGN, INC. WBE | DBE — EFFINGHAM, IL — LICENSE #184.003222

USER NAME =	DESIGNED – JAG	REVISED –	
	CHECKED – JGS	REVISED –	
PLOT SCALE =	DRAWN – JAG	REVISED –	
PLOT DATE =	CHECKED – JGS	REVISED –	

STATE OF ILLINOIS
DEPARTMENT OF TRANSPORTATION

EX. STRUCTURE - SUPERSTRUCTURE DETAILS
STRUCTURE NO. 100-0107

F.A.P. RTE.	SECTION	COUNTY	TOTAL SHEETS	SHEET NO.
331	(1-4)R-5,RS-2,B-1,B-2,B-3,B-4	WILLIAMSON	519	277

CONTRACT NO. 78373
ILLINOIS | FED. AID PROJECT

STATE OF ILLINOIS
DEPARTMENT OF TRANSPORTATION

					SHEET NO. 7a
		Williamson	42	23	13 SHEETS
FED. ROAD DIST. NO. 7		ILLINOIS	FED. AID PROJECT-		

* (5B-1) (DR, DR-1)

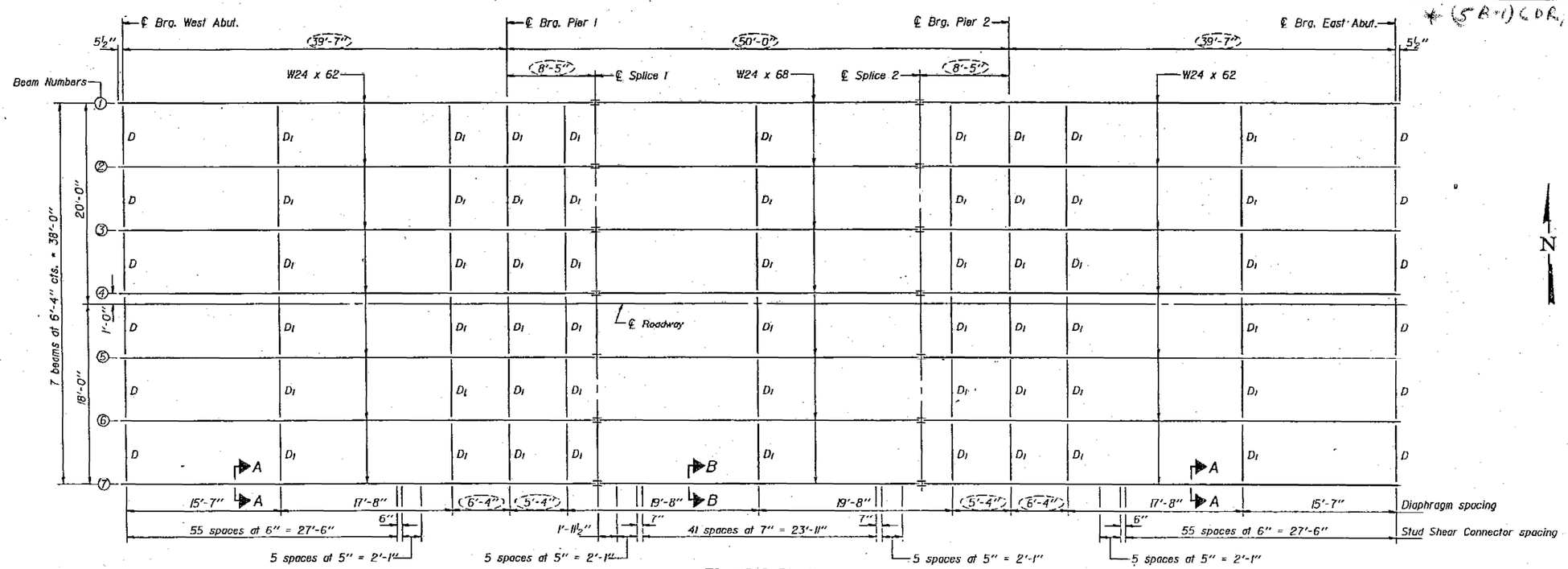

FRAMING PLAN

Notes: All beams shall be AASHTO M 223, Grade 50 and shall meet Notch Toughness Requirements. For details of diaphragms and splices see sheet 8 of 13.

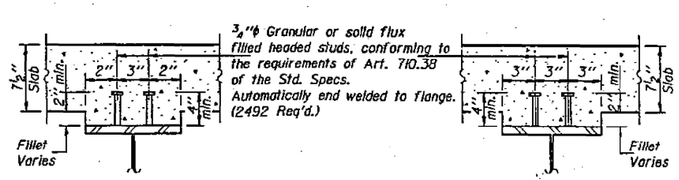

SECTION A-A

SECTION B-B

DESIGNED	Mark P. Thomson
CHECKED	Shayla Ali (SJ)
DRAWN	Joe Sutherland
CHECKED	MPT

June 10 1988
EXAMINED Roger D. Kasper — ENGINEER OF MEDIUM DESIGN
PASSED James T. Kenburn — ENGINEER OF BRIDGE AND STRUCTURES
APPROVED — DIRECTOR OF HIGHWAYS

FOR INFORMATION ONLY

(AS REVISED - 11/3/88 - MPT)
STRUCTURAL STEEL DETAILS
F.A. RT. 410 SEC. (5B-1)DR
WILLIAMSON COUNTY
STATION 309+50.00

MODEL: Default
FILE NAME: C:\Users\jschreckenberg\Downloads\107-100-0107-78373-032-Existing Structure_Framing.dgn
2/13/2025 7:06:43 AM

CIVIL DESIGN, INC. WBE / DBE EFFINGHAM, IL LICENSE #184.003222	USER NAME =	DESIGNED – JAG	REVISED –
		CHECKED – JGS	REVISED –
	PLOT SCALE =	DRAWN – JAG	REVISED –
	PLOT DATE =	CHECKED – JGS	REVISED –

STATE OF ILLINOIS
DEPARTMENT OF TRANSPORTATION

EX. STRUCTURE - FRAMING PLAN
STRUCTURE NO. 100-0107

F.A.P. RTE.	SECTION	COUNTY	TOTAL SHEETS	SHEET NO.
331	(1-4)R-5,RS-2,B-1,B-2,B-3,B-4	WILLIAMSON	519	278
		CONTRACT NO. 78373		
	ILLINOIS	FED. AID PROJECT		

410	*	Williamson	92	24	SHEET NO. 80 / 13 SHEETS

* (5B-1) (DR,DR-1)

STATE OF ILLINOIS
DEPARTMENT OF TRANSPORTATION

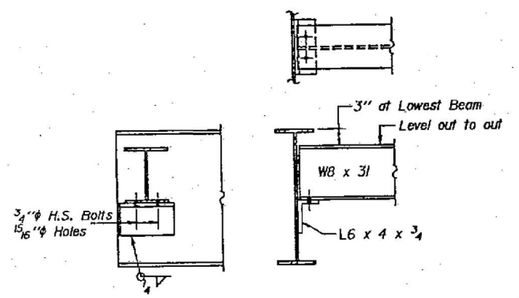

DIAPHRAGM D
(12 Required)

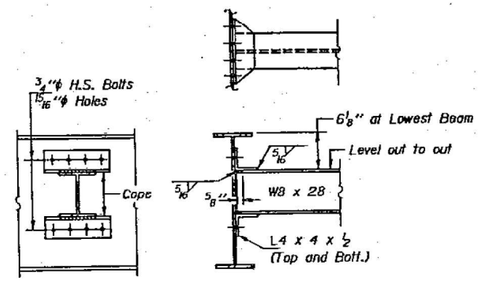

DIAPHRAGM D1
(54 Required)

INTERIOR BEAM MOMENT TABLE				
		0.4 Sp. #1 or 0.6 Sp. #3	Pier 1 or Pier 2	.5 Sp. 2
Is	(in4)	1550	1550	1830
Ic	(in4)	5520		6089
Ss	(in3)	131	131	154
Sc	(in3)	226		253
wℓ	(K/ft.)	.69	.95	.695
Mℓ	('K)	70	179	85
sℓ	(K/ft.)	.26		.26
Msℓ	('K)	33		47
Mℓ	('K)	215	111	272
M (Imp)	('K)	65	34	82
5/3(Mℓ+I)	('K)	467	242	590
Ma	('K)	740	547	938
Mu	('K)	1392		1511
fsℓ non-comp	(k.s.i.)	6.4	(16.1)	6.6
fsℓ (comp)	(k.s.i.)	1.8		2.2
fs 5/3(ℓ+I)	(k.s.i.)	24.8	(21.8)	28
fs (Overload)	(k.s.i.)	33	(37.9)	36.8
fs (Total)	(k.s.i.)		(49.3)	
VR	(K)	43.3		46.4

Is and Ss are the moment of inertia and section modulus of the steel section used in computing fs (Total & Overload).

Ic and Sc are the moment of inertia and section modulus of the composite section used in computing fs (Total & Overload).

VR is the maximum Live Load + Impact shear range in span.

Ma (Applied Moment)=1.3[Mℓ + Msℓ + 5/3(Mℓ + I)].

Mu is the Full Plastic Moment Capacity for Compact, Braced section.

fs (Overload) is the sum of the stresses due to Mℓ + Msℓ + 5/3(Mℓ + I).

fs (Total) (Non-compact section) is the sum of the stresses due to 1.3[Mℓ + Msℓ + 5/3(Mℓ + I)].

Mℓ is moment due to dead loads on noncomposite section.

Msℓ is moment due to dead loads on composite section.

Mℓ is moment due to live load on noncomposite or composite section.

I is live load impact.

INTERIOR BEAM REACTION TABLE			
		Abuts.	Pier 1 or Pier 2
Rℓ	(K)	15.0	47.5
Rℓ	(K)	30.4	37.5
Imp.	(K)	9.1	11.2
R (Total)	(K)	54.5	96.2

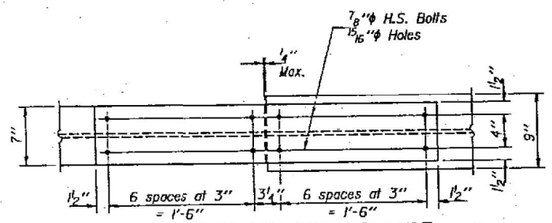

PLAN OF TOP AND BOTT. FLANGE

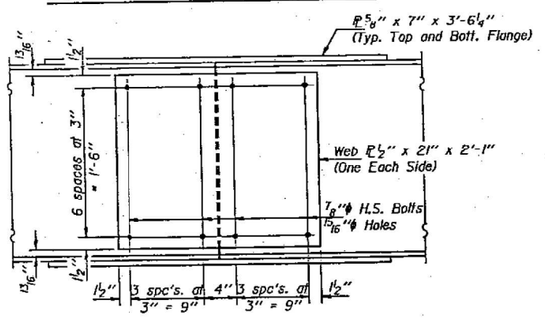

WEB ELEVATION
Splice 1 looking North
Splice 2 looking South

* TOP OF FLANGE ELEVATIONS

Location	Beam 1	Beam 2	Beam 3	Beam 4	Beam 5	Beam 6	Beam 7
℄ Brg. West and East Abut's.	414.73	414.87	414.98	415.08	415.01	414.91	414.78
℄ Brg. Pier 1 and Pier 2	414.73	414.87	414.98	415.08	415.01	414.91	414.78
℄ Splice 1 and 2	414.73	414.87	414.98	415.08	415.01	414.91	414.78

* For fabrication purposes only.

Notes: Two hardened washers shall be required over all bolt holes in diaphragms.
All splice plate material shall meet Notch Toughness Requirements.
All splice plate material shall be AASHTO M 223, Grade 50.

DESIGNED	Mark P. Thomas
CHECKED	Shayla Ali (S.D)
DRAWN	Joe Sutherland
CHECKED	MPT

June 10 1988
EXAMINED — ENGINEER OF BRIDGE DESIGN
PASSED — ENGINEER OF BRIDGES AND STRUCTURES
APPROVED — DIRECTOR OF HIGHWAYS

FOR INFORMATION ONLY

(AS REVISED - 11/3/88 - MPT)
STRUCTURAL STEEL DETAILS
F.A. RT. 410 SEC. (5B-1)DR
WILLIAMSON COUNTY
STATION 309+50.00

MODEL: Default
FILE NAME: C:\Users\schreckenberg\Downloads\107-100-0107-78373-033-Framing Details.dgn

CDI — CIVIL DESIGN, INC. WBE / DBE — EFFINGHAM, IL LICENSE #184.003222

USER NAME =	DESIGNED – JAG	REVISED –	
	CHECKED – JGS	REVISED –	
PLOT SCALE =	DRAWN – JAG	REVISED –	
PLOT DATE =	CHECKED – JGS	REVISED –	

STATE OF ILLINOIS
DEPARTMENT OF TRANSPORTATION

EX. STRUCTURE - FRAMING DETAILS
STRUCTURE NO. 100-0107

F.A.P. RTE.	SECTION	COUNTY	TOTAL SHEETS	SHEET NO.
331	(1-4)R-5,RS-2,B-1,B-2,B-3,B-4	WILLIAMSON	519	279
		CONTRACT NO. 78373		
		ILLINOIS FED. AID PROJECT		

2/13/2025 7:19:14 AM

STATE OF ILLINOIS
DEPARTMENT OF TRANSPORTATION

ROUTE NO.	SECTION	COUNTY	TOTAL SHEETS	SHEET NO.
F.A.P. 410	*	Williamson	42	26

SHEET NO. 10a
13 SHEETS

*(5B-1)DRDR-1

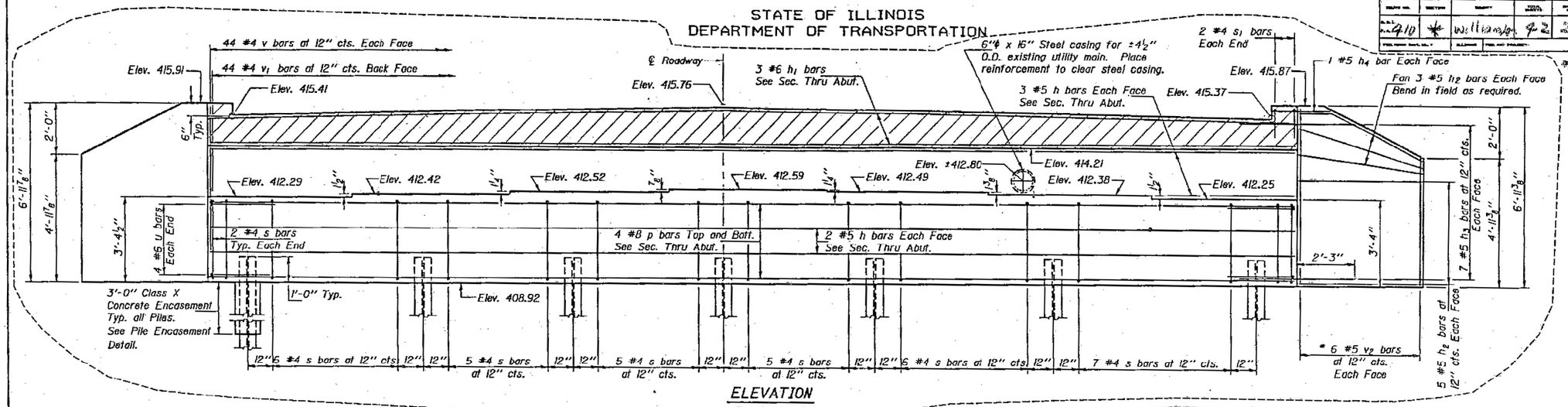

ELEVATION
(Looking West)

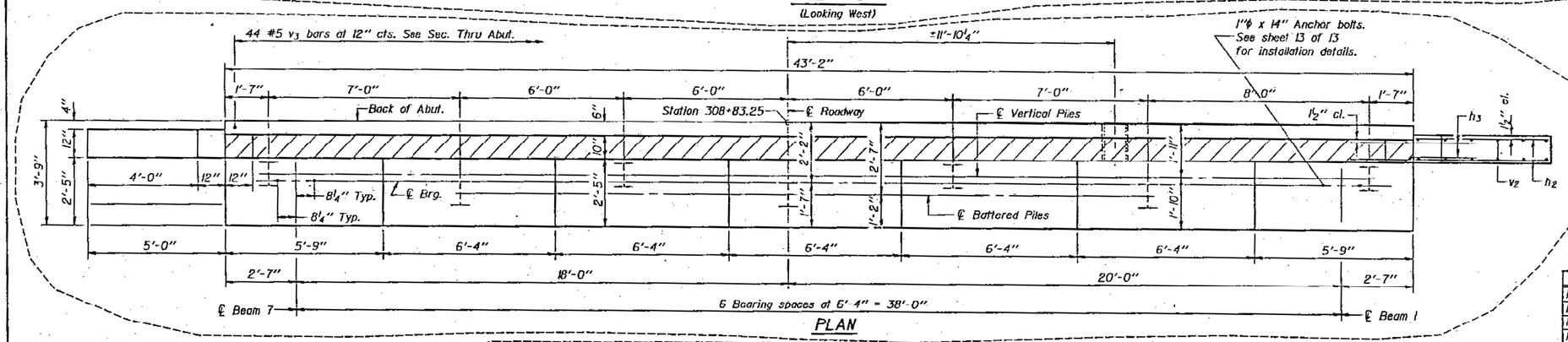

PLAN

PILE DATA

Type: Steel HP10x42
Capacity: Drive to Refusal
Est. Length: 64'
No. Required: (7)

BILL OF MATERIAL

Bar	No.	Size	Length	Shape
h	10	#5	42'-11"	
h1	3	#6	42'-11"	
h2	32	#5	4'-9"	
h3	28	#5	4'-6"	
h4	4	#5	1'-9"	
p	8	#8	42'-11"	
s	(38)	#4	(13'-7")	
s1	4	#4	3'-7"	
u	8	#6	7'-9"	
v	88	#4	4'-4"	
v1	44	#4	3'-1"	
v2	12	#5	11'-4"	
v3	44	#5	2'-0"	
Class X Concrete			Cu. Yd.	(27.)
Reinforcement Bars			Pound	(2880)
Steel Piles HP10x42			Lin. Ft.	(448)

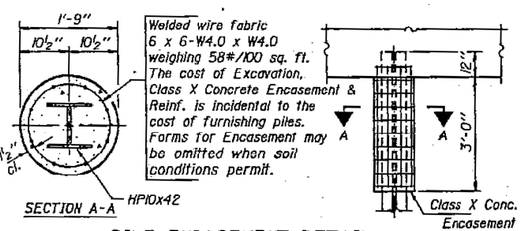

PILE ENCASEMENT DETAIL

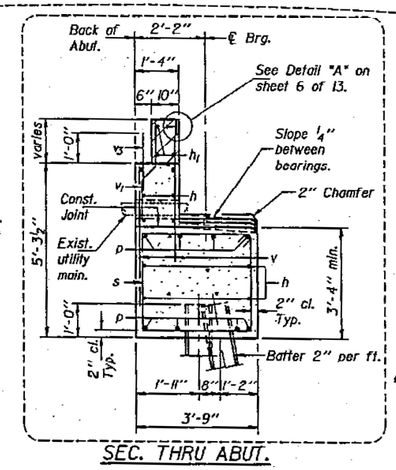

SEC. THRU ABUT.

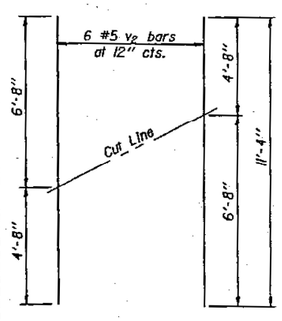

* FIELD CUTTING DIAGRAM

Order v2 bars full length. Cut to fit as shown and use remainder of bars in other face of wings.

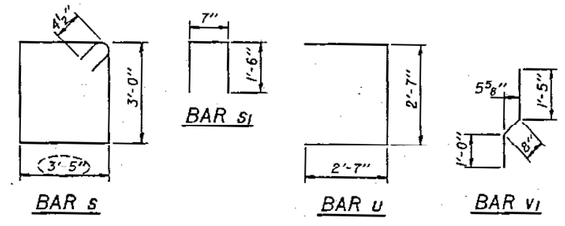

Notes: Hatched area to be poured after superstructure is in place and form work is removed. Concrete in hatched area shall be billed with superstructure as "Class X Concrete Superstructure".
Space reinforcement in cap to miss anchor bolts.
Pour steps monolithically with cap.
All exposed edges shall have a ¾" chamfer except as noted.
Cost of steel casing shall be incidental to Class X Concrete.
Existing timber piles shall be cut off flush with bottom of new cap.

FOR INFORMATION ONLY

(AS REVISED - 11/3/88 - MPT)
WEST ABUTMENT
F.A. RT. 410 SEC. (5B-1)DR
WILLIAMSON COUNTY
STATION 309+50.00

DESIGNED	Mark P. Thrasher
CHECKED	Shayla Ali (S.D.)
DRAWN	Joe Sutherland
CHECKED	MPT

June 16 1988
EXAMINED Sergi J. Kaspar, ENGINEER OF BRIDGE DESIGN
PASSED James T. Kaufman, ENGINEER OF BRIDGES AND STRUCTURES
APPROVED DIRECTOR OF HIGHWAYS

STATE OF ILLINOIS
DEPARTMENT OF TRANSPORTATION

SHEET NO. 10 OF 13 SHEETS

*(5B-1)(DR,DR-1)

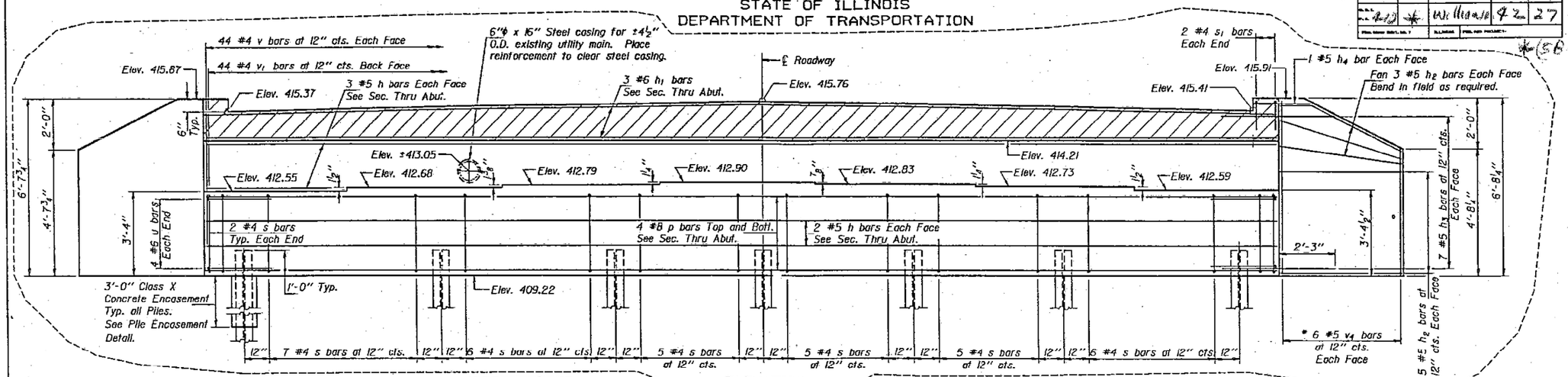

ELEVATION
(Looking East)

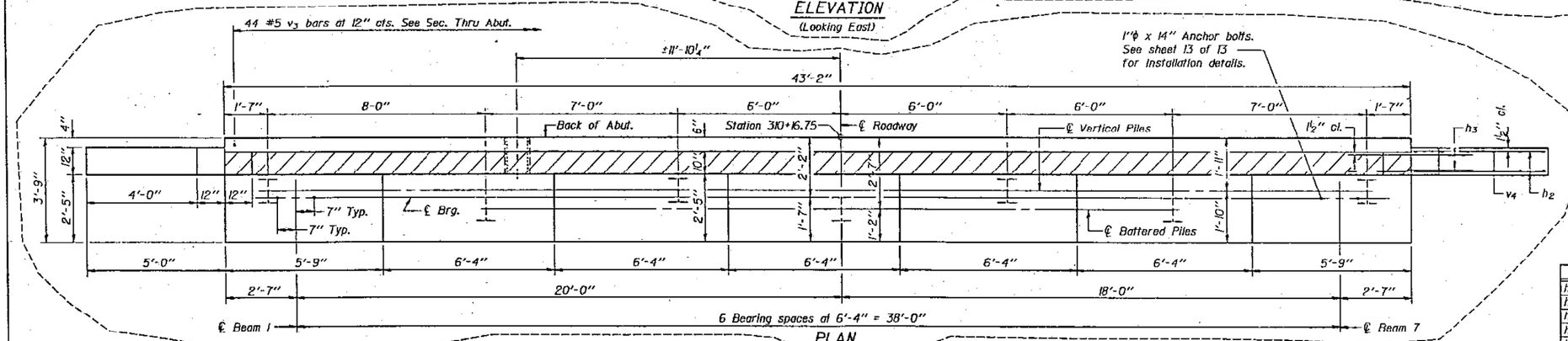

PLAN

PILE DATA

Type: Steel HP10x42
Capacity: Drive to Refusal
Est. Length: 64'
No. Required: (7)

BILL OF MATERIAL

Bar	No.	Size	Length	Shape
h	10	#5	42'-11"	
h1	3	#6	42'-11"	
h2	32	#5	4'-9"	
h3	28	#5	4'-6"	
h4	4	#5	1'-9"	
p	8	#8	42'-11"	
s	(38)	#4	(13'-7")	
s1	4	#4	3'-7"	
u	8	#6	7'-9"	
v	88	#4	4'-4"	
v1	44	#4	3'-1"	
v3	44	#5	2'-0"	
v4	12	#5	10'-10"	
Class X Concrete			Cu. Yd.	(26.3)
Reinforcement Bars			Pound	(2880)
Steel Piles HP10x42			Lin. Ft.	(448)

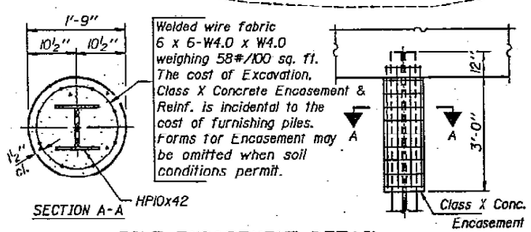

PILE ENCASEMENT DETAIL

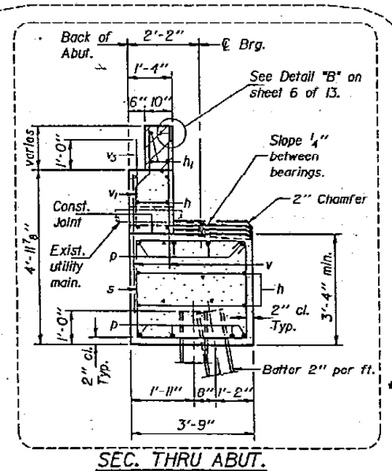

SEC. THRU ABUT.

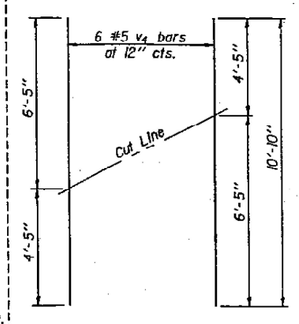

* FIELD CUTTING DIAGRAM

Order v4 bars full length. Cut to fit as shown and use remainder of bars in other face of wings.

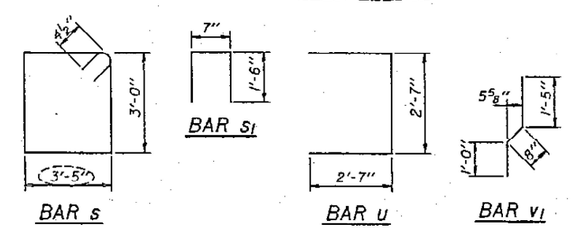

Notes: Hatched area to be poured after superstructure is in place and form work is removed. Concrete in hatched area shall be billed with superstructure as "Class X Concrete Superstructure".
Space reinforcement in cap to miss anchor bolts.
Pour steps monolithically with cap.
All exposed edges shall have a ¾" chamfer except as noted.
Cost of steel casting shall be incidental to Class X Concrete.
Existing timber piles shall be cut off flush with bottom of new cap.

(AS REVISED - 11/3/88 - MPT)

EAST ABUTMENT
F.A. RT. 410 SEC. (5B-1)DR
WILLIAMSON COUNTY
STATION 309+50.00

DESIGNED	Mark P. Thomas
CHECKED	Shayla Ali (53)
DRAWN	Joe Sutherland
CHECKED	MPT

June 10 1988
EXAMINED — ENGINEER OF MATERIALS DESIGN
PASSED — ENGINEER OF BRIDGE AND STRUCTURES
APPROVED — DIRECTOR OF HIGHWAYS

FOR INFORMATION ONLY

MODEL: Default
FILE NAME: C:\Users\schreckenberg\Downloads\107100-0107-78373-035-Existing Structure_Substructure Det 2.dgn

CDI — CIVIL DESIGN, INC. WBE | DBE — EFFINGHAM, IL — LICENSE #184.003222

USER NAME =	DESIGNED – JAG	REVISED –	
	CHECKED – JGS	REVISED –	
PLOT SCALE =	DRAWN – JAG	REVISED –	
PLOT DATE =	CHECKED – JGS	REVISED –	

STATE OF ILLINOIS
DEPARTMENT OF TRANSPORTATION

EX. STRUCTURE - SUBSTRUCTURE DETAILS 2
STRUCTURE NO. 100-0107

F.A.P. RTE.	SECTION	COUNTY	TOTAL SHEETS	SHEET NO.
331	(1-4)R-5,RS-2,B-1,B-2,B-3,B-4	WILLIAMSON	519	281
		CONTRACT NO. 78373		
		ILLINOIS FED. AID PROJECT		

2/13/2025 7:11:45 AM

Notes: Space reinforcement in cap to miss anchor bolts.
All edges shall have standard ¾" chamfers except as noted.
Pour steps monolithically with cap.

STATE OF ILLINOIS
DEPARTMENT OF TRANSPORTATION

ROUTE NO.	SECTION	COUNTY	TOTAL SHEETS	SHEET NO.
F.A.P. 410	*	Williamson	22	28

SHEET NO. 12a
13 SHEETS

* (5B-1) (DR, DR-1)

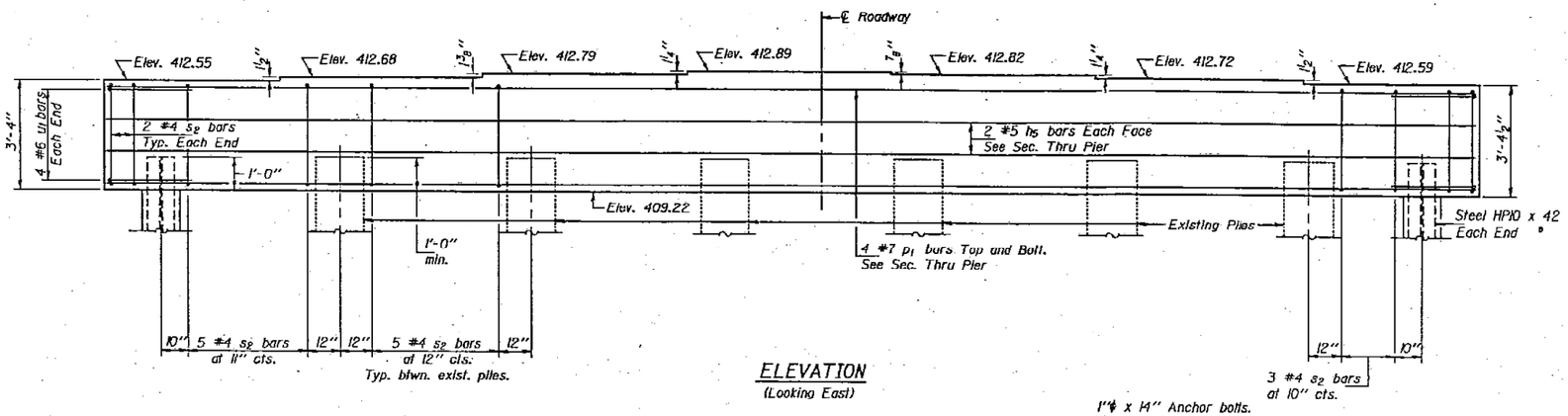

ELEVATION
(Looking East)

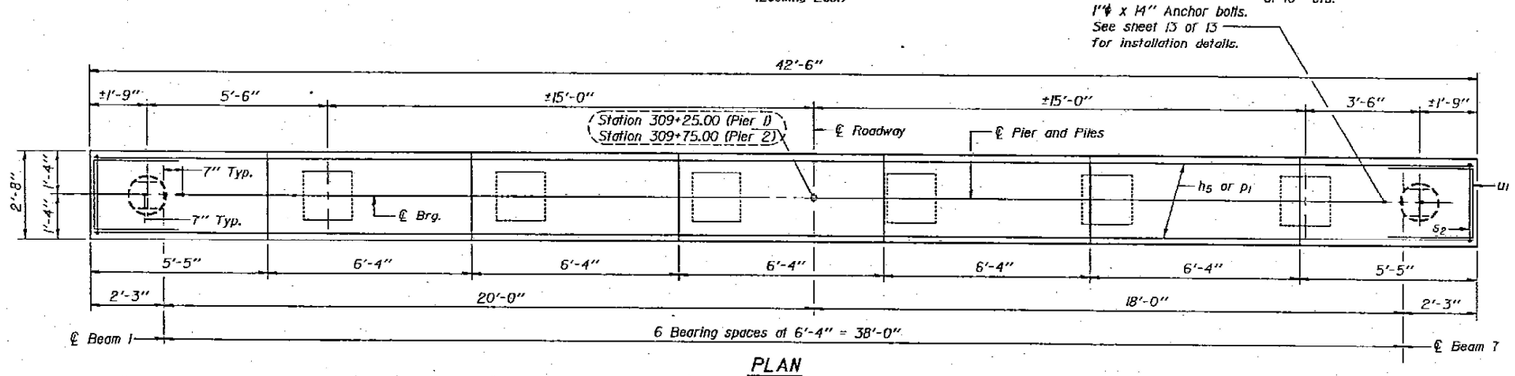

PLAN

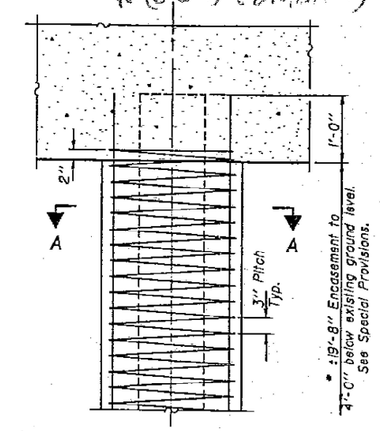

DETAIL OF PROTECTION FOR STEEL H PILES

* If a portion of the pile encasement is under water, Class X Concrete shall be tremmied under water into forms as necessary. Cofferdams are not required.

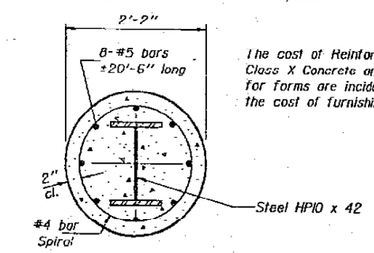

SECTION A-A

The cost of Reinforcement, Class X Concrete and excavation for forms are incidental to the cost of furnishing piles.

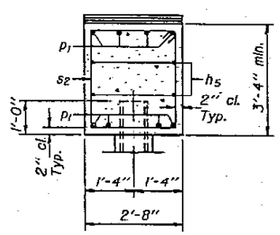

SEC. THRU PIERS

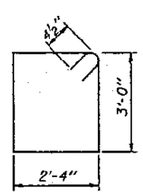

BAR s_2

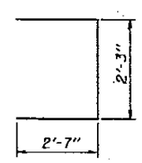

BAR u_1

PIER 1
BILL OF MATERIAL

Bar	No.	Size	Length	Shape
h_5	4	#5	42'-3"	
p_1	8	#7	42'-3"	
s_2	37	#4	11'-5"	
u_1	8	#6	7'-5"	
Class X Concrete			Cu. Yd.	14.1
Reinforcement Bars			Pound	1240
Steel Piles HP10 x 42			Lin. Ft.	66
Test Pile Steel HP10 x 42			Each	1

PIER 2
BILL OF MATERIAL

Bar	No.	Size	Length	Shape
h_5	4	#5	42'-3"	
p_1	8	#7	42'-3"	
s_2	37	#4	11'-5"	
u_1	8	#6	7'-5"	
Class X Concrete			Cu. Yd.	14.1
Reinforcement Bars			Pound	1240
Steel Piles HP10 x 42			Lin. Ft.	132

PILE DATA FOR PIER 1

Type: Steel HP10 x 42
Capacity: Drive to Refusal
Est. Length: 66'
No. Required: 1 Plus 1 test pile.

PILE DATA FOR PIER 2

Type: Steel HP10 x 42
Capacity: Drive to Refusal
Est. Length: 66'
No. Required: 2

(AS REVISED - 11/3/88 - MPT)

PIERS 1 AND 2
F.A. RT. 410 SEC. (5B-1)DR
WILLIAMSON COUNTY
STATION 309+50.00

FOR INFORMATION ONLY

DESIGNED	Mark P. Tillman
CHECKED	Shajla Ali (SJ)
DRAWN	Joe Sutherland
CHECKED	MPT

June 10 1988
EXAMINED Greg J. Kaspar — ENGINEER OF BRIDGE DESIGN
PASSED James T. Reuberson — ENGINEER OF BRIDGE AND STRUCTURES
APPROVED — DIRECTOR OF HIGHWAYS

MODEL: Default
FILE NAME: C:\Users\schreckenberg\Downloads\107100-0107-78373-036-Existing Structure_Substructure Det 3.dgn

CDI — CIVIL DESIGN, INC. WBE / DBE — EFFINGHAM, IL — LICENSE #184.003222

USER NAME =	DESIGNED – JAG	REVISED –	
	CHECKED – JGS	REVISED –	
PLOT SCALE =	DRAWN – JAG	REVISED –	
PLOT DATE =	CHECKED – JGS	REVISED –	

STATE OF ILLINOIS
DEPARTMENT OF TRANSPORTATION

EX. STRUCTURE - SUBSTRUCTURE DETAILS 3
STRUCTURE NO. 100-0107

F.A.P. RTE.	SECTION	COUNTY	TOTAL SHEETS	SHEET NO.
331	(1-4)R-5,RS-2,B-1,B-2,B-3,B-4	WILLIAMSON	519	282
		CONTRACT NO. 78373		
		ILLINOIS FED. AID PROJECT		

2/13/2025 7:12:14 AM

Bench Mark: Sq. cut in N.W. corner W. wall of S.N. 100-0020.

Existing Structure: S.N. 100-0020 was originally constructed in 1964 under F.A. Rte. 14, Section 5-3B-4. The structure is a three span (35'-9", 46'-11", 35'-9") continuous wide flange bridge with seven beam lines on pile bent abutments. The structure is 123'-0" from bk. to bk. abutments on a zero degree skew. The clear width is 40'-0" between face to face of parapets and the overall out to out width of the bridge is 42'-0". The superstructure consists of seven beam lines of 27WF94 on 6'-4" centers. The original reinforced concrete deck thickness was 7", but was later scarified 1/2" (1999) and a 2 1/4" Microsilica concrete overlay was installed for a total thickness of +/- 8 3/4". The bridge deck is on a normal crown. The abutments are pile bent abutments on H-piles driven to refusal. The wingwalls consist of 12" walls bearing on a single H-pile. The piers are pile bents on seven individually encased piles driven to refusal.

Road closure shall be used during construction. Traffic will be detoured on the adjacent structure using crossovers.

No salvage.

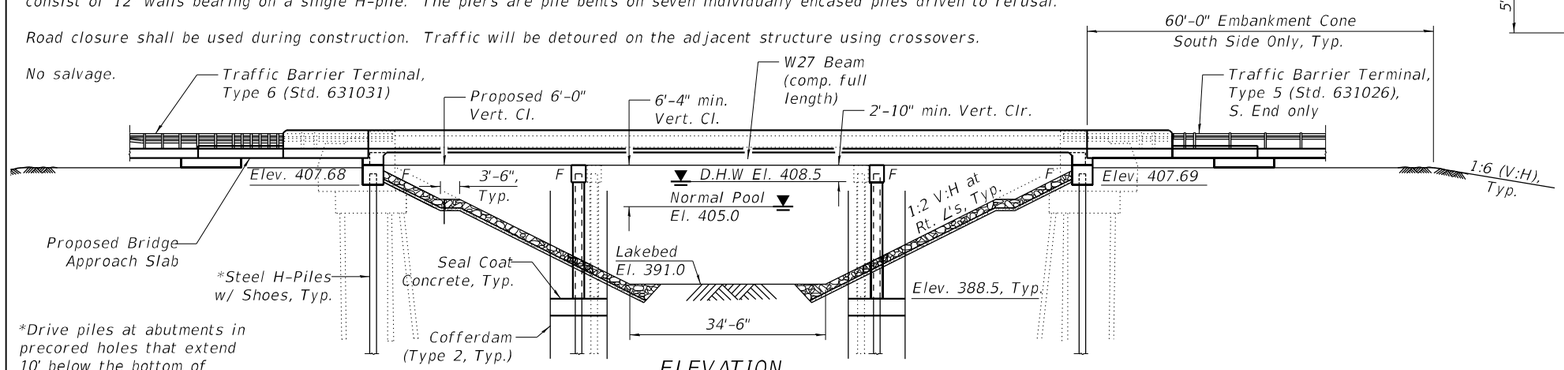

*Drive piles at abutments in precored holes that extend 10' below the bottom of abutment caps and fill holes with Bentonite after pile driving.

ELEVATION

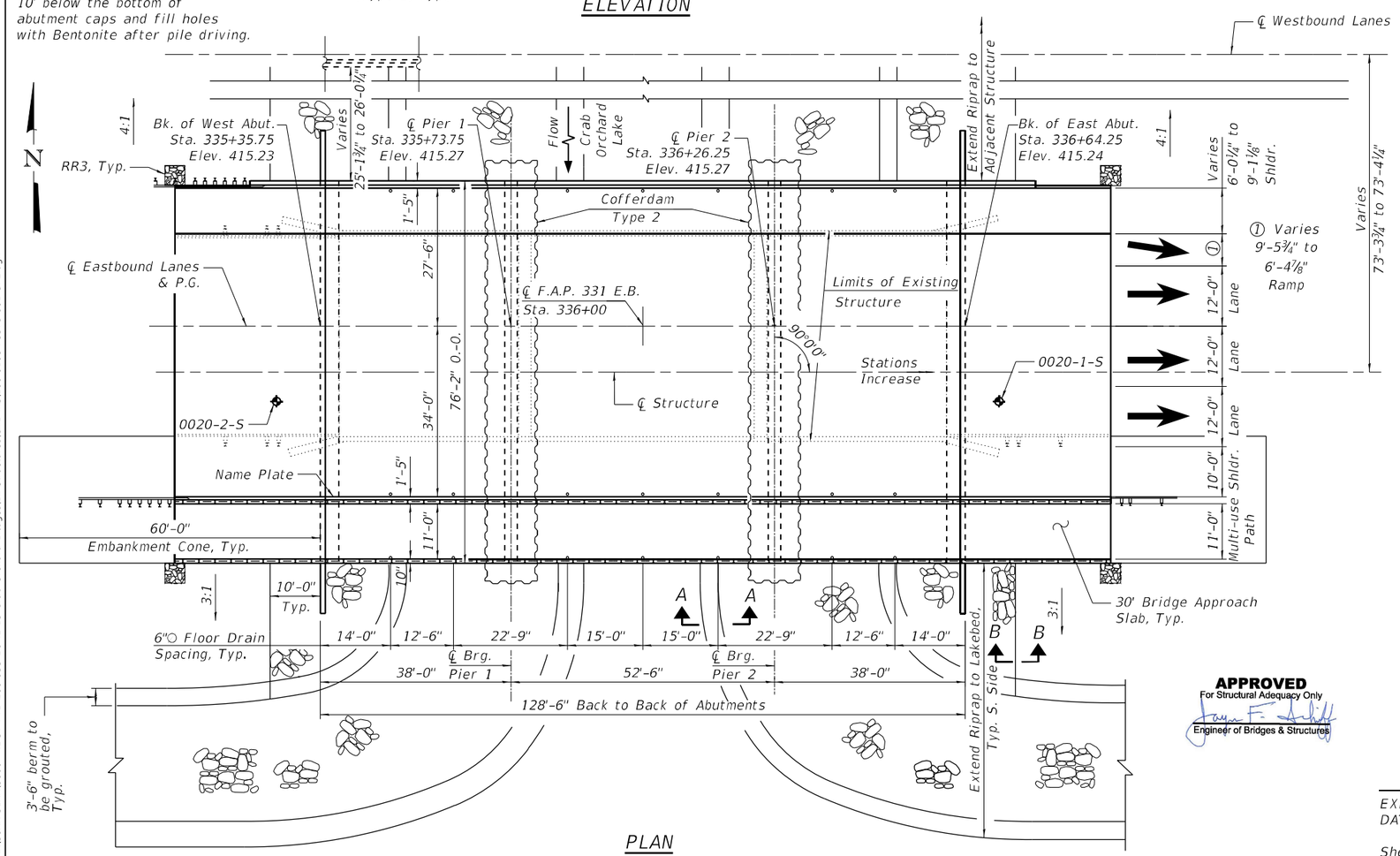

PLAN

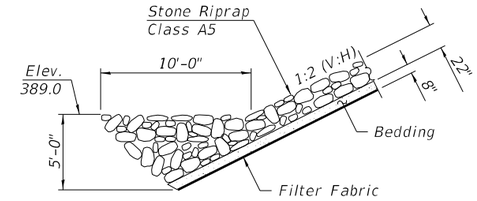

SECTION A-A

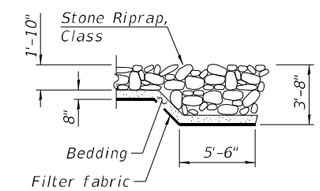

SECTION B-B

LOADING HL-93

Allow 50#/sq. ft. for future wearing surface.

DESIGN SPECIFICATIONS

2020 AASHTO LRFD Bridge Design Specifications, 9th Edition.

DESIGN STRESSES

FIELD UNITS

f'c = 3,500 psi (Substructure)
f'c = 4,000 psi (Superstructure)
fy = 60,000 psi (Reinforcement)
fy = 50,000 psi (M270 Grade 50)
All new structural steel to be galvanized.

SEISMIC DATA

Seismic Performance Zone (SPZ) = 3
Design Spectral Acceleration at 1.0 sec. (SD1) = 0.359g
Design Spectral Acceleration at 0.2 sec. (SDS) = 0.864g
Soil Site Class = D

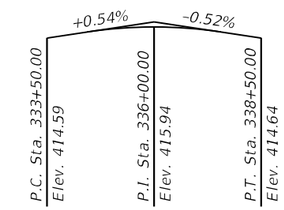

PROFILE GRADE

Along ℄ Eastbound Lanes

STATE OF ILLINOIS
JOHANN F. AAKRE
081-006828
CHICAGO, ILLINOIS
LICENSED STRUCTURAL ENGINEER

EXPIRES: 11/30/2026
DATE: 02/21/2025

Sheets 24 thru 26 of 30.

STATE OF ILLINOIS
DREW H. COULTAS
81-4539
SPRINGFIELD
LICENSED STRUCTURAL ENGINEER

EXPIRES: 11/30/2026
DATE: 02/21/2025

Sheets 21 thru 23 of 30.

LICENSED STRUCTURAL ENGINEER
JASON G. SCHRECKENBERG
081.006845
STATE OF ILLINOIS

EXPIRES: 11/30/2026
DATE: 02/21/2025

Sheets 1 thru 20 and 27 thru 30 of 30.

Notes:

Up to a ¼" to be ground off deck and approach slabs. The Profile Grade shows the final grade after grinding.

See Roadway Plans for Rip Rap quantities and pay items.

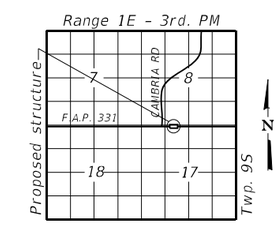

LOCATION SKETCH

APPROVED
For Structural Adequacy Only
Engineer of Bridges & Structures

GENERAL PLAN AND ELEVATION
IL 13 E.B. OVER CRAB ORCHARD LAKE
F.A.P. RT. 331 - SEC. 1-4(B-3)
WILLIAMSON COUNTY
STATION 336+00.00
STRUCTURE NO. 100-0108

CDI — CIVIL DESIGN, INC. WBE / DBE — EFFINGHAM, IL — LICENSE #184.003222

USER NAME =	DESIGNED - JAG	REVISED -	
	CHECKED - JGS	REVISED -	
PLOT SCALE =	DRAWN - JAG	REVISED -	
PLOT DATE =	CHECKED - JGS	REVISED -	

STATE OF ILLINOIS
DEPARTMENT OF TRANSPORTATION

GENERAL PLAN & ELEVATION
STRUCTURE NO. 100-0108
SHEET 1 OF 30 SHEETS

F.A.P. RTE.	SECTION	COUNTY	TOTAL SHEETS	SHEET NO.
331	(1-4)R-5,RS-2,B-1,B-2,B-3,B-4	WILLIAMSON	519	283
		CONTRACT NO. 78373		
		ILLINOIS	FED. AID PROJECT	

MODEL: Default
FILE NAME: P:\5XXX50XX-51XX\5000 - IDOT PTB 200-038 D9 IL 13 Crab Orchard Bridges\24-Structures\CAD-MS\100-0108-78373-001-GPE.dgn
3/11/2025 6:28:47 AM

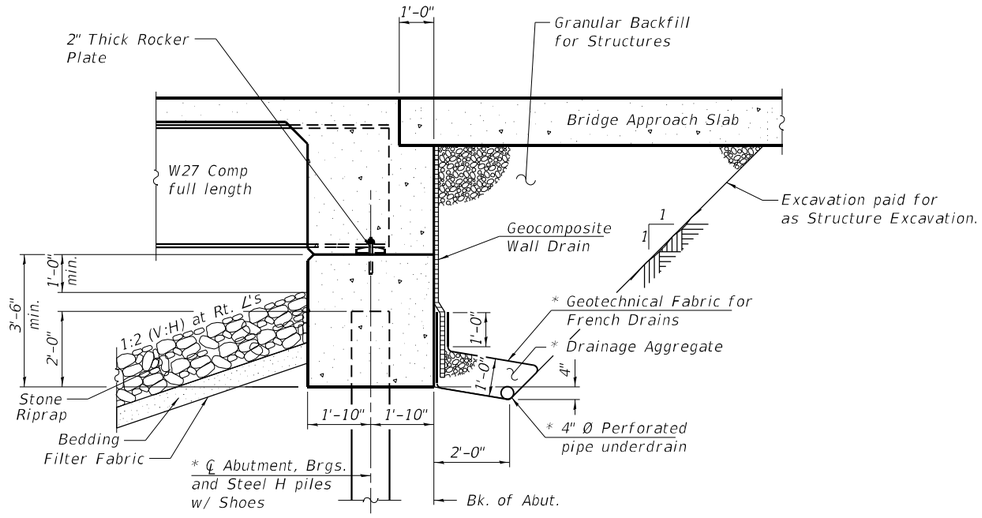

*Drive piles at abutments (S.N. 100-0108 only) in precored holes that extend 10' below the bottom of abutment caps and fill holes with Bentonite after pile driving. Cost included with Driving Piles.

SECTION THRU INTEGRAL ABUTMENT

(Horiz. dim. @ Rt. L's)

* Included in the cost of Pipe Underdrains for Structures.

All drainage system components shall extend 2'-0" from the end of each wingwall except an outlet pipe shall extend until intersecting with the side slopes. The pipes shall drain into concrete headwalls. (See Article 601.05 of the Standard Specifications and Highway Standard 601101).

WATERWAY INFORMATION

Drainage Area = 3.2 Sq. mi. Low Grade Elev. 414.6 @ Sta. 333+50

Flood	Freq. Yr.	Q C.F.S.	Opening Ft² Exist.	Opening Ft² Prop.	Nat. H.W.E.	Head - Ft. Exist.	Head - Ft. Prop.	Headwater El. Exist.	Headwater El. Prop.
Ten-Year	10	731	968	1,075	407.5	0.0	0.0	407.5	407.5
Design	50	1,164	1,065	1,182	408.5	0.0	0.0	408.5	408.5
Base	100	1,356	1,106	1,227	408.9	0.0	0.0	408.9	408.9
Scour Check	200	1,541	1,147	1,271	409.3	0.0	0.0	409.3	409.3
Max. Calc.	500	1,853	1,221	1,351	410.0	0.0	0.0	410.0	410.0

DESIGN SCOUR ELEVATION TABLE

Event / Limit State	Design Scour Elevations (ft.) W. Abut.	Pier 1	Pier 2	E. Abut.	Item 113
0100	407.7	386.4	386.4	407.7	5
0200	407.7	386.3	386.3	407.7	
Design	407.7	386.4	386.4	407.7	
Check	407.7	386.3	386.3	407.7	

STATION 336+00.00
BUILT 202X BY
STATE OF ILLINOIS
SEC. 1-4(B-3)
F.A.S. RT. 331
LOADING HL-93
STR. NO. 100-0108

NAME PLATE

See Std. 515001

INDEX OF SHEETS

GENERAL NOTES

Fasteners shall be ASTM F3125 Grade A325 Type 1. Fasteners shall be hot dip galvanized. See Special Provision for "Hot Dip Galvanizing for Structural Steel." Bolts 7/8 in. diameter, holes 15/16 in. diameter, unless otherwise noted.

Calculated weight of Structural Steel = 216,700 lbs. (AASHTO M270 Grade 50)
23,670 lbs. (AASHTO M270 Grade 36)

All structural steel shall be galvanized. See Special Provision for "Hot Dip Galvanizing for Structural Steel".

No field welding is permitted except as specified in the contract documents.

Reinforcement bars designated (E) shall be epoxy coated.

The finishing machine rails shall be placed on the top of the top flange of the exterior beams within the deck pour. Beam blocks shall be placed between beams at all tie locations in each bay for the full width of the deck pour.

Bearing seat surfaces shall be constructed or adjusted to the designated elevations within a tolerance of 1/8 inch (0.01 ft.). Adjustment shall be made either by grinding the surface or by shimming the bearings.

All bearing plates, side retainers, anchor bolts, nuts, washers and pintles shall be galvanized according to AASHTO M111 or M232 as applicable.

The Seal Coat design thickness is based on the Cofferdam Design Water Elevation (CDWE) shown. Final cofferdam design, details and seal coat thickness shall be submitted to the Engineer for approval. The CDWE is equal to the Estimated Water Surface Elevation (EWSE) plus three feet.

The existing structural steel coating contains lead. The Contractor shall take appropriate precautions to deal with presence of lead on this project.

Layout of the slope protection system may be varied to suit ground conditions in the field as directed by the Engineer.

The embankment configuration shown shall be the minimum that must be placed and compacted prior to construction of the abutments.

The parapet railing, decorative steel railing, posts, splices, ancor devices and plates of railing shall be shop painted with field touch up. The color of the final finish coat of paint shall be black. See Special Provision for "Hot Dip Galvanizing for Structural Steel".

Slipforming of the parapets is not allowed.

TOTAL BILL OF MATERIAL

ITEM	UNIT	SUPER	SUB	TOTAL
Removal of Existing Structures No. 3	Each	-	-	1
Structure Excavation	Cu. Yd.	-	512	512
Cofferdam Excavation	Cu. Yd.	-	682	682
Cofferdam (Type 2) (Location-5)	Each	-	1	1
Cofferdam (Type 2) (Location-6)	Each	-	1	1
Floor Drains	Each	21	-	21
Concrete Structures	Cu. Yd.	-	400.8	400.8
Concrete Superstructure	Cu. Yd.	300.8	-	300.8
Seal Coat Concrete	Cu. Yd.	-	280	280
Protective Coat	Sq. Yd.	1,791	-	1,791
Concrete Superstructure (Approach Slab)	Cu. Yd.	214.0	-	214.0
Furnishing and Erecting Structural Steel	L. Sum	0.25	-	0.25
Stud Shear Connectors	Each	8,307	-	8,307
Reinforcement Bars, Epoxy Coated	Pound	162,750	48,660	211,410
Parapet Railing	Foot	185.0	-	185.0
Furnishing Steel Piles HP 14 x 89	Foot	-	3,012	3,012
Driving Piles	Foot	-	3,012	3,012
Test Pile Steel HP 14 x 89	Each	-	4	4
Pile Shoes	Each	-	52	52
Name Plates	Each	1	-	1
Anchor Bolts, 1"	Each	-	104	104
Granular Backfill for Structures	Cu. Yd.	-	257	257
Geocomposite Wall Drain	Sq. Yd.	-	122	122
Pipe Underdrains for Structures 4"	Foot	-	250	250
Decorative Steel Railing	Foot	185.0	-	185.0
Bar Terminator	Each	418	708	1,126
Bridge Deck Grooving (Longitudinal)	Sq. Yd.	965	-	965
Diamond Grinding (Bridge Section)	Sq. Yd.	1,415	-	1,415

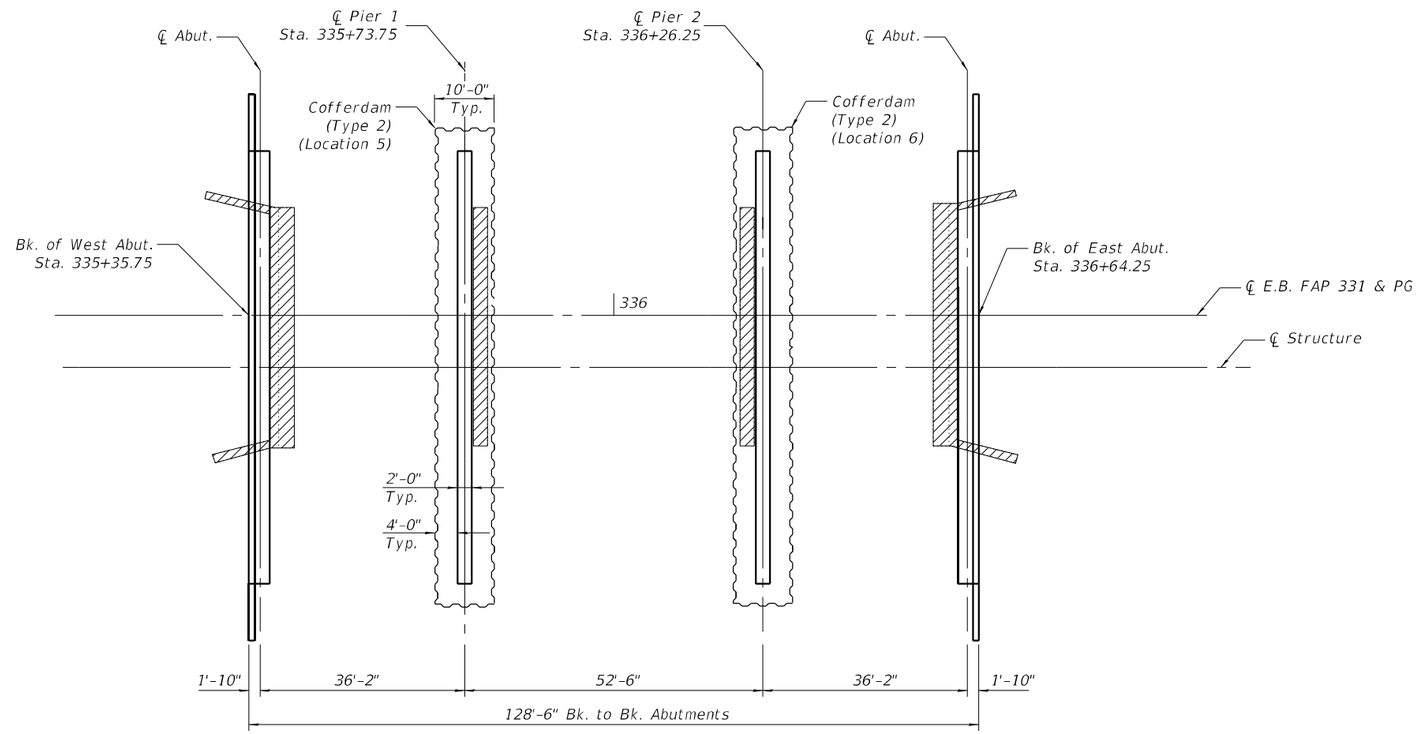

SUBSTRUCTURE LAYOUT

Notes:

Pier and Cofferdam (Type 2) dimensions are typical at all proposed pier locations.

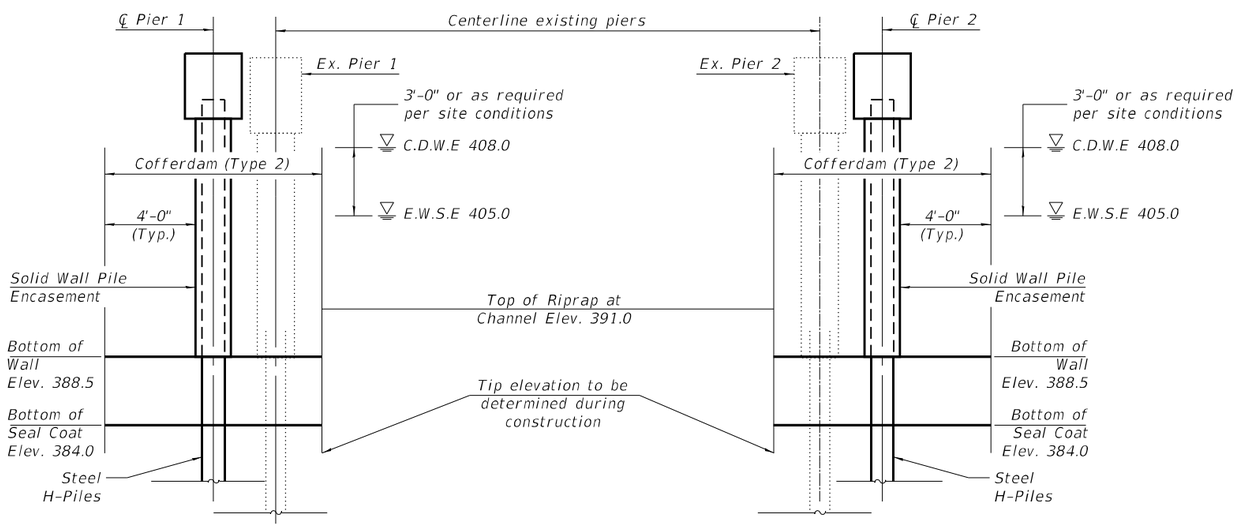

Section thru Pier 1

Section thru Pier 2

COFFERDAM DETAILS

(Horiz. dim. @ Rt. ∠'s)

MODEL: Default
FILE NAME: P:\5XXX\50XX-51XX\5000 - IDOT PTB 200-038 D9 IL 13 Crab Orchard Bridges\24-Structures\CAD-MS\100-0108-78373-003-Substructure Layout.dgn
3/11/2025 6:29:44 AM

CIVIL DESIGN, INC.
WBE / DBE
EFFINGHAM, IL
LICENSE #184.003222

USER NAME =	DESIGNED – JAG	REVISED –	
	CHECKED – JGS	REVISED –	
PLOT SCALE =	DRAWN – JAG	REVISED –	
PLOT DATE =	CHECKED – JGS	REVISED –	

STATE OF ILLINOIS
DEPARTMENT OF TRANSPORTATION

SUBSTRUCTURE LAYOUT
STRUCTURE NO. 100-0108

SHEET 3 OF 30 SHEETS

F.A.P. RTE.	SECTION	COUNTY	TOTAL SHEETS	SHEET NO.
331	(1-4)R-5,RS-2,B-1,B-2,B-3,B-4	WILLIAMSON	519	285
		CONTRACT NO. 78373		
		ILLINOIS FED. AID PROJECT		

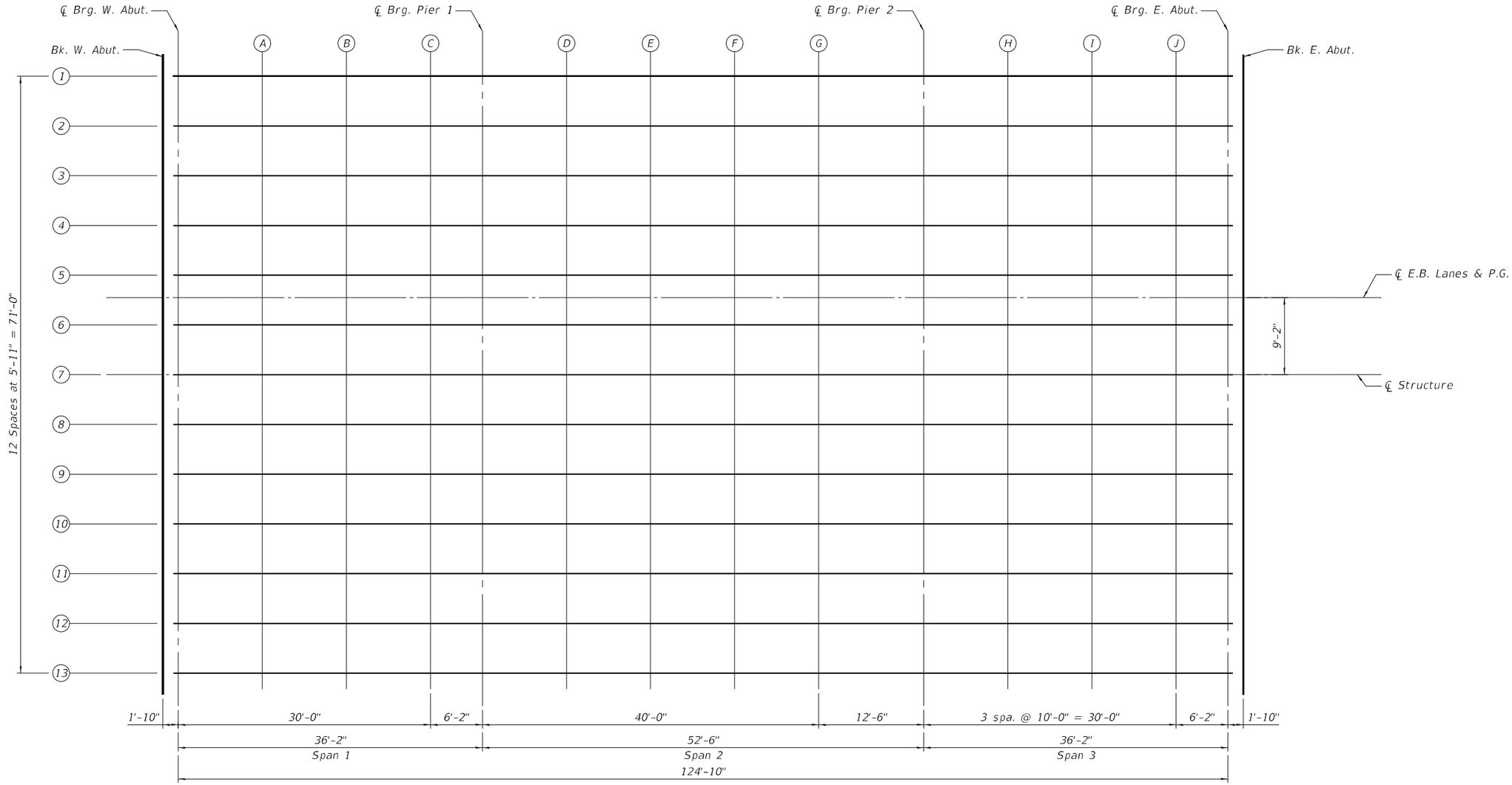

PLAN

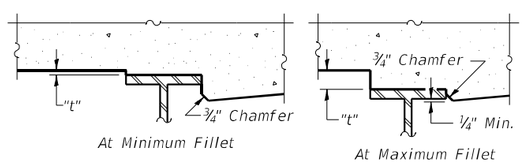

At Minimum Fillet

At Maximum Fillet

To determine "t": After all structural steel has been erected, elevations of the top flanges of the beams shall be taken at intervals shown above. These elevations subtracted from the "Theoretical Grade Elevations Adjusted for Dead Load Deflection and Grinding" shown below, minus the initial slab thickness prior to grinding, equals the fillet heights "t" above top flange of beams.

The slab is to be ground after curing to achieve smoothness, but the slab is not to be ground to elevations below the "Theoretical Grade Elevations" shown above. For grinding the deck, see Special Provisions.

See sheets 5 & 6 of 30 for Top of Slab Elevations.

FILLET HEIGHTS

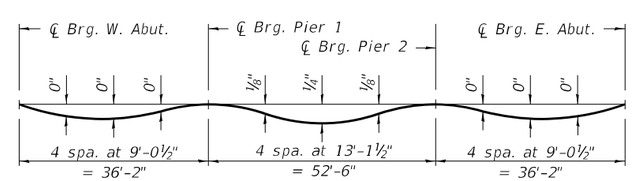

DEAD LOAD DEFLECTION DIAGRAM

(Includes weight of concrete only.)

Note:

The above deflections are not to be used in the field if the engineer is working from the grade elevations adjusted for dead load deflections and grinding as shown above.

See sheets 5 & 6 of 30 for Top of Slab Elevations.

BEAM 1

Location	Station	Offset	Theoretical Grade Elevations	Theoretical Grade Elevations Adjusted For Dead Load Deflection and Grinding
Bk. of W. Abut.	335+35.75	-26.33	414.76	414.78
℄ Brg. W. Abut.	335+37.58	-26.33	414.76	414.78
A	335+47.58	-26.33	414.78	414.80
B	335+57.58	-26.33	414.79	414.81
C	336+67.58	-26.33	414.80	414.82
℄ Brg. Pier 1	335+73.75	-26.33	414.80	414.82
D	335+83.75	-26.33	414.81	414.84
E	335+93.75	-26.33	414.81	414.85
F	336+03.75	-26.33	414.81	414.85
G	336+13.75	-26.33	414.81	414.84
℄ Brg. Pier 2	336+26.25	-26.33	414.81	414.83
H	336+36.25	-26.33	414.80	414.82
I	336+46.25	-26.33	414.79	414.82
J	336+56.25	-26.33	414.78	414.81
℄ Brg. E. Abut.	336+62.42	-26.33	414.78	414.80
Bk. of E. Abut.	336+64.25	-26.33	414.77	414.79

BEAM 2

Location	Station	Offset	Theoretical Grade Elevations	Theoretical Grade Elevations Adjusted For Dead Load Deflection and Grinding
Bk. of W. Abut.	335+35.75	-20.42	414.88	414.90
℄ Brg. W. Abut.	335+37.58	-20.42	414.88	414.90
A	335+47.58	-20.42	414.89	414.92
B	335+57.58	-20.42	414.91	414.93
C	336+67.58	-20.42	414.91	414.94
℄ Brg. Pier 1	335+73.75	-20.42	414.92	414.94
D	335+83.75	-20.42	414.92	414.96
E	335+93.75	-20.42	414.93	414.97
F	336+03.75	-20.42	414.93	414.97
G	336+13.75	-20.42	414.93	414.96
℄ Brg. Pier 2	336+26.25	-20.42	414.92	414.95
H	336+36.25	-20.42	414.92	414.94
I	336+46.25	-20.42	414.91	414.94
J	336+56.25	-20.42	414.90	414.93
℄ Brg. E. Abut.	336+62.42	-20.42	414.89	414.91
Bk. of E. Abut.	336+64.25	-20.42	414.89	414.91

BEAM 3

Location	Station	Offset	Theoretical Grade Elevations	Theoretical Grade Elevations Adjusted For Dead Load Deflection and Grinding
Bk. of W. Abut.	335+35.75	-14.50	415.00	415.02
℄ Brg. W. Abut.	335+37.58	-14.50	415.00	415.02
A	335+47.58	-14.50	415.01	415.04
B	335+57.58	-14.50	415.02	415.05
C	336+67.58	-14.50	415.03	415.05
℄ Brg. Pier 1	335+73.75	-14.50	415.04	415.06
D	335+83.75	-14.50	415.04	415.07
E	335+93.75	-14.50	415.05	415.09
F	336+03.75	-14.50	415.05	415.09
G	336+13.75	-14.50	415.05	415.08
℄ Brg. Pier 2	336+26.25	-14.50	415.04	415.06
H	336+36.25	-14.50	415.04	415.06
I	336+46.25	-14.50	415.03	414.06
J	336+56.25	-14.50	415.02	415.04
℄ Brg. E. Abut.	336+62.42	-14.50	415.01	415.03
Bk. of E. Abut.	336+64.25	-14.50	415.01	415.03

BEAM 4

Location	Station	Offset	Theoretical Grade Elevations	Theoretical Grade Elevations Adjusted For Dead Load Deflection and Grinding
Bk. of W. Abut.	335+35.75	-8.58	415.10	415.12
℄ Brg. W. Abut.	335+37.58	-8.58	415.10	415.12
A	335+47.58	-8.58	415.11	415.14
B	335+57.58	-8.58	415.13	415.15
C	336+67.58	-8.58	415.13	415.16
℄ Brg. Pier 1	335+73.75	-8.58	415.14	415.16
D	335+83.75	-8.58	415.14	415.18
E	335+93.75	-8.58	415.15	415.19
F	336+03.75	-8.58	415.15	415.19
G	336+13.75	-8.58	415.15	415.18
℄ Brg. Pier 2	336+26.25	-8.58	415.14	415.16
H	336+36.25	-8.58	415.14	415.16
I	336+46.25	-8.58	415.13	415.16
J	336+56.25	-8.58	415.12	415.15
℄ Brg. E. Abut.	336+62.42	-8.58	415.11	415.13
Bk. of E. Abut.	336+64.25	-8.58	415.11	415.13

BEAM 5

Location	Station	Offset	Theoretical Grade Elevations	Theoretical Grade Elevations Adjusted For Dead Load Deflection and Grinding
Bk. of W. Abut.	335+35.75	-2.67	415.19	415.21
℄ Brg. W. Abut.	335+37.58	-2.67	415.19	415.21
A	335+47.58	-2.67	415.20	415.23
B	335+57.58	-2.67	415.21	415.24
C	336+67.58	-2.67	415.22	415.24
℄ Brg. Pier 1	335+73.75	-2.67	415.23	415.25
D	335+83.75	-2.67	415.23	415.26
E	335+93.75	-2.67	415.24	415.28
F	336+03.75	-2.67	415.24	415.28
G	336+13.75	-2.67	415.24	415.27
℄ Brg. Pier 2	336+26.25	-2.67	415.23	415.25
H	336+36.25	-2.67	415.23	415.25
I	336+46.25	-2.67	415.22	415.25
J	336+56.25	-2.67	415.21	415.23
℄ Brg. E. Abut.	336+62.42	-2.67	415.20	415.22
Bk. of E. Abut.	336+64.25	-2.67	415.20	415.22

℄ E.B. LANES & P.G.

Location	Station	Offset	Theoretical Grade Elevations	Theoretical Grade Elevations Adjusted For Dead Load Deflection and Grinding
Bk. of W. Abut.	335+35.75	0.00	415.23	415.25
℄ Brg. W. Abut.	335+37.58	0.00	415.23	415.25
A	335+47.58	0.00	415.24	415.27
B	335+57.58	0.00	415.25	415.28
C	336+67.58	0.00	415.26	415.28
℄ Brg. Pier 1	335+73.75	0.00	415.27	415.29
D	335+83.75	0.00	415.27	415.30
E	335+93.75	0.00	415.28	415.32
F	336+03.75	0.00	415.28	415.32
G	336+13.75	0.00	415.28	415.31
℄ Brg. Pier 2	336+26.25	0.00	415.27	415.29
H	336+36.25	0.00	415.27	415.29
I	336+46.25	0.00	415.26	415.29
J	336+56.25	0.00	415.25	415.27
℄ Brg. E. Abut.	336+62.42	0.00	415.24	415.26
Bk. of E. Abut.	336+64.25	0.00	415.24	415.26

BEAM 6

Location	Station	Offset	Theoretical Grade Elevations	Theoretical Grade Elevations Adjusted For Dead Load Deflection and Grinding
Bk. of W. Abut.	335+35.75	3.25	415.18	415.20
℄ Brg. W. Abut.	335+37.58	3.25	415.18	415.20
A	335+47.58	3.25	415.19	415.22
B	335+57.58	3.25	415.21	415.23
C	336+67.58	3.25	415.21	415.24
℄ Brg. Pier 1	335+73.75	3.25	415.22	415.24
D	335+83.75	3.25	415.22	415.26
E	335+93.75	3.25	415.23	415.27
F	336+03.75	3.25	415.23	415.27
G	336+13.75	3.25	415.23	415.26
℄ Brg. Pier 2	336+26.25	3.25	415.22	415.24
H	336+36.25	3.25	415.22	415.24
I	336+46.25	3.25	415.21	415.24
J	336+56.25	3.25	415.20	415.23
℄ Brg. E. Abut.	336+62.42	3.25	415.19	415.21
Bk. of E. Abut.	336+64.25	3.25	415.19	415.21

BEAM 7 & ℄ STRUCTURE

Location	Station	Offset	Theoretical Grade Elevations	Theoretical Grade Elevations Adjusted For Dead Load Deflection and Grinding
Bk. of W. Abut.	335+35.75	9.17	415.09	415.11
℄ Brg. W. Abut.	335+37.58	9.17	415.09	415.11
A	335+47.58	9.17	415.11	415.13
B	335+57.58	9.17	415.12	415.14
C	336+67.58	9.17	415.13	415.15
℄ Brg. Pier 1	335+73.75	9.17	415.13	415.15
D	335+83.75	9.17	415.14	415.17
E	335+93.75	9.17	415.14	415.18
F	336+03.75	9.17	415.14	415.18
G	336+13.75	9.17	415.14	415.17
℄ Brg. Pier 2	336+26.25	9.17	415.14	415.16
H	336+36.25	9.17	415.13	415.15
I	336+46.25	9.17	415.12	415.14
J	336+56.25	9.17	415.11	415.14
℄ Brg. E. Abut.	336+62.42	9.17	415.10	415.13
Bk. of E. Abut.	336+64.25	9.17	415.10	415.12

BEAM 8

Location	Station	Offset	Theoretical Grade Elevations	Theoretical Grade Elevations Adjusted For Dead Load Deflection and Grinding
Bk. of W. Abut.	335+35.75	15.08	414.99	415.01
℄ Brg. W. Abut.	335+37.58	15.08	414.99	415.01
A	335+47.58	15.08	415.00	415.03
B	335+57.58	15.08	415.01	415.04
C	336+67.58	15.08	415.02	415.04
℄ Brg. Pier 1	335+73.75	15.08	415.03	415.05
D	335+83.75	15.08	415.03	415.06
E	335+93.75	15.08	415.03	415.08
F	336+03.75	15.08	415.04	415.08
G	336+13.75	15.08	415.04	415.07
℄ Brg. Pier 2	336+26.25	15.08	415.03	415.05
H	336+36.25	15.08	415.03	415.05
I	336+46.25	15.08	415.02	415.04
J	336+56.25	15.08	415.01	415.03
℄ Brg. E. Abut.	336+62.42	15.08	415.00	415.02
Bk. of E. Abut.	336+64.25	15.08	415.00	415.02

BEAM 9

Location	Station	Offset	Theoretical Grade Elevations	Theoretical Grade Elevations Adjusted For Dead Load Deflection and Grinding
Bk. of W. Abut.	335+35.75	21.00	414.87	414.89
℄ Brg. W. Abut.	335+37.58	21.00	414.87	414.89
A	335+47.58	21.00	414.88	414.91
B	335+57.58	21.00	414.89	414.92
C	336+67.58	21.00	414.90	414.92
℄ Brg. Pier 1	335+73.75	21.00	414.91	414.93
D	335+83.75	21.00	414.91	414.94
E	335+93.75	21.00	414.92	414.96
F	336+03.75	21.00	414.92	414.96
G	336+13.75	21.00	414.92	414.95
℄ Brg. Pier 2	336+26.25	21.00	414.91	414.93
H	336+36.25	21.00	414.91	414.93
I	336+46.25	21.00	414.90	414.93
J	336+56.25	21.00	414.89	414.91
℄ Brg. E. Abut.	336+62.42	21.00	414.88	414.90
Bk. of E. Abut.	336+64.25	21.00	414.88	414.90

BEAM 10

Location	Station	Offset	Theoretical Grade Elevations	Theoretical Grade Elevations Adjusted For Dead Load Deflection and Grinding
Bk. of W. Abut.	335+35.75	26.92	414.75	414.77
℄ Brg. W. Abut.	335+37.58	26.92	414.75	414.77
A	335+47.58	26.92	414.76	414.79
B	335+57.58	26.92	414.78	414.80
C	336+67.58	26.92	414.78	414.81
℄ Brg. Pier 1	335+73.75	26.92	414.79	414.81
D	335+83.75	26.92	414.79	414.83
E	335+93.75	26.92	414.80	414.84
F	336+03.75	26.92	414.80	414.84
G	336+13.75	26.92	414.80	414.83
℄ Brg. Pier 2	336+26.25	26.92	414.79	414.82
H	336+36.25	26.92	414.79	414.81
I	336+46.25	26.92	414.78	414.81
J	336+56.25	26.92	414.77	414.80
℄ Brg. E. Abut.	336+62.42	26.92	414.76	414.78
Bk. of E. Abut.	336+64.25	26.92	414.76	414.78

BEAM 11

Location	Station	Offset	Theoretical Grade Elevations	Theoretical Grade Elevations Adjusted For Dead Load Deflection and Grinding
Bk. of W. Abut.	335+35.75	32.83	414.63	414.65
℄ Brg. W. Abut.	335+37.58	32.83	414.63	414.65
A	335+47.58	32.83	414.65	414.67
B	335+57.58	32.83	414.66	414.68
C	336+67.58	32.83	414.67	414.69
℄ Brg. Pier 1	335+73.75	32.83	414.67	414.69
D	335+83.75	32.83	414.68	414.71
E	335+93.75	32.83	414.68	414.72
F	336+03.75	32.83	414.68	414.72
G	336+13.75	32.83	414.68	414.71
℄ Brg. Pier 2	336+26.25	32.83	414.68	414.70
H	336+36.25	32.83	414.67	414.69
I	336+46.25	32.83	414.66	414.69
J	336+56.25	32.83	414.65	414.68
℄ Brg. E. Abut.	336+62.42	32.83	414.65	414.67
Bk. of E. Abut.	336+64.25	32.83	414.64	414.67

BEAM 12

Location	Station	Offset	Theoretical Grade Elevations	Theoretical Grade Elevations Adjusted For Dead Load Deflection and Grinding
Bk. of W. Abut.	335+35.75	38.75	414.51	414.54
℄ Brg. W. Abut.	335+37.58	38.75	414.51	414.54
A	335+47.58	38.75	414.53	414.55
B	335+57.58	38.75	414.54	414.56
C	336+67.58	38.75	414.55	414.57
℄ Brg. Pier 1	335+73.75	38.75	414.55	414.57
D	335+83.75	38.75	414.56	414.59
E	335+93.75	38.75	414.56	414.60
F	336+03.75	38.75	414.56	414.61
G	336+13.75	38.75	414.56	414.60
℄ Brg. Pier 2	336+26.25	38.75	414.56	414.58
H	336+36.25	38.75	414.55	414.57
I	336+46.25	38.75	414.54	414.57
J	336+56.25	38.75	414.53	414..56
℄ Brg. E. Abut.	336+62.42	38.75	414.53	414.55
Bk. of E. Abut.	336+64.25	38.75	414.53	414.55

BEAM 13

Location	Station	Offset	Theoretical Grade Elevations	Theoretical Grade Elevations Adjusted For Dead Load Deflection and Grinding
Bk. of W. Abut.	335+35.75	44.67	414.39	414.41
℄ Brg. W. Abut.	335+37.58	44.67	414.40	414.42
A	335+47.58	44.67	414.41	414.44
B	335+57.58	44.67	414.42	414.45
C	336+67.58	44.67	414.43	414.45
℄ Brg. Pier 1	335+73.75	44.67	414.43	414.46
D	335+83.75	44.67	414.44	414.47
E	335+93.75	44.67	414.44	414.49
F	336+03.75	44.67	414.44	414.49
G	336+13.75	44.67	414.44	414.48
℄ Brg. Pier 2	336+26.25	44.67	414.44	414.46
H	336+36.25	44.67	414.43	414.46
I	336+46.25	44.67	414.43	414.45
J	336+56.25	44.67	414.42	414.44
℄ Brg. E. Abut.	336+62.42	44.67	414.41	414.43
Bk. of E. Abut.	336+64.25	44.67	414.41	414.43

NORTH EDGE OF SHOULDER

Location	Station	Offset	Theoretical Grade Elevations	Theoretical Grade Elevations Adjusted For Grinding
W. End West Appr. Slab	335+06.75	-27.50	414.69	414.71
A1	335+16.75	-27.50	414.71	414.73
A2	335+26.75	-27.50	414.72	414.74
E. End West Appr. Slab	335+36.75	-27.50	414.74	414.76

NORTH EDGE OF PAVEMENT

Location	Station	Offset	Theoretical Grade Elevations	Theoretical Grade Elevations Adjusted For Grinding
W. End West Appr. Slab	335+06.75	-22.18	414.80	414.82
A1	335+16.75	-21.94	414.82	414.84
A2	335+26.75	-21.70	414.84	414.86
E. End West Appr. Slab	335+36.75	-21.46	414.85	414.87

℄ E.B. LANES & P.G.

Location	Station	Offset	Theoretical Grade Elevations	Theoretical Grade Elevations Adjusted For Grinding
W. End West Appr. Slab	335+06.75	0.00	415.18	415.20
A1	335+16.75	0.00	415.20	415.22
A2	335+26.75	0.00	415.21	415.23
E. End West Appr. Slab	335+36.75	0.00	415.23	415.25

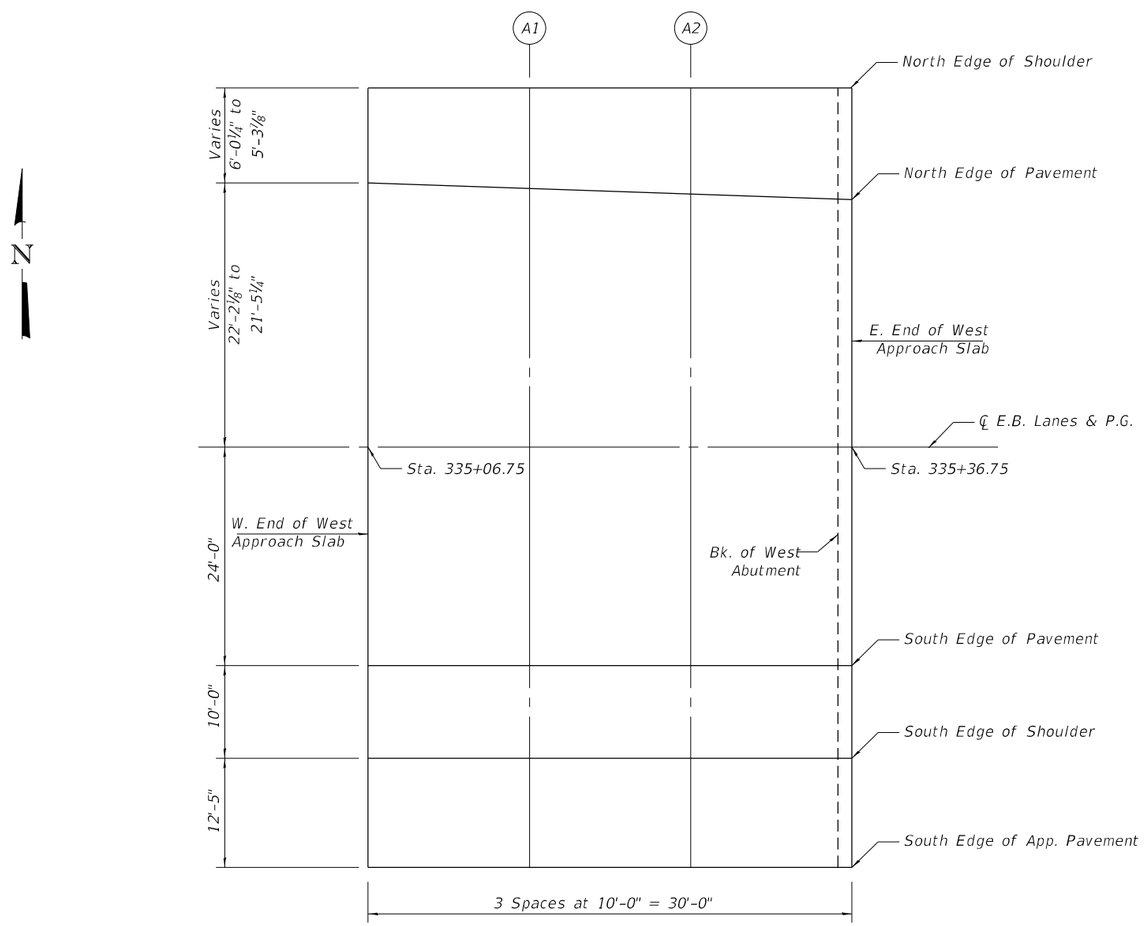

PLAN
(West Approach)

SOUTH EDGE OF PAVEMENT

Location	Station	Offset	Theoretical Grade Elevations	Theoretical Grade Elevations Adjusted For Grinding
W. End West Appr. Slab	335+06.75	24.00	414.76	414.78
A1	335+16.75	24.00	414.78	414.80
A2	335+26.75	24.00	414.79	414.81
E. End West Appr. Slab	335+36.75	24.00	414.81	414.83

SOUTH EDGE OF SHOULDER

Location	Station	Offset	Theoretical Grade Elevations	Theoretical Grade Elevations Adjusted For Grinding
W. End West Appr. Slab	335+06.75	34.00	414.56	414.58
A1	335+16.75	34.00	414.58	414.60
A2	335+26.75	34.00	414.59	414.61
E. End West Appr. Slab	335+36.75	34.00	414.60	414.62

SOUTH EDGE OF APP. PAVEMENT

Location	Station	Offset	Theoretical Grade Elevations	Theoretical Grade Elevations Adjusted For Grinding
W. End West Appr. Slab	335+06.75	46.42	414.31	414.33
A1	335+16.75	46.42	414.33	414.35
A2	335+26.75	46.42	414.34	414.36
E. End West Appr. Slab	335+36.75	46.42	414.36	414.38

E-AS1 2-17-2017

NORTH EDGE OF SHOULDER

Location	Station	Offset	Theoretical Grade Elevations	Theoretical Grade Elevations Adjusted For Grinding
W. End West Appr. Slab	336+63.25	-27.50	414.75	414.77
A3	336+73.25	-27.50	414.74	414.76
A4	336+83.25	-27.50	414.72	414.74
E. End West Appr. Slab	336+93.75	-27.50	414.70	414.72

NORTH EDGE OF PAVEMENT

Location	Station	Offset	Theoretical Grade Elevations	Theoretical Grade Elevations Adjusted For Grinding
W. End West Appr. Slab	336+63.25	-18.43	414.94	414.96
A3	336+73.25	-18.19	414.93	414.95
A4	336+83.25	-17.95	414.91	414.93
E. End West Appr. Slab	336+93.75	-17.71	414.89	414.91

℄ E.B. LANES & P.G.

Location	Station	Offset	Theoretical Grade Elevations	Theoretical Grade Elevations Adjusted For Grinding
W. End West Appr. Slab	336+63.25	0.00	415.24	415.26
A3	336+73.25	0.00	415.23	415.25
A4	336+83.25	0.00	415.21	415.23
E. End West Appr. Slab	336+93.75	0.00	415.19	415.21

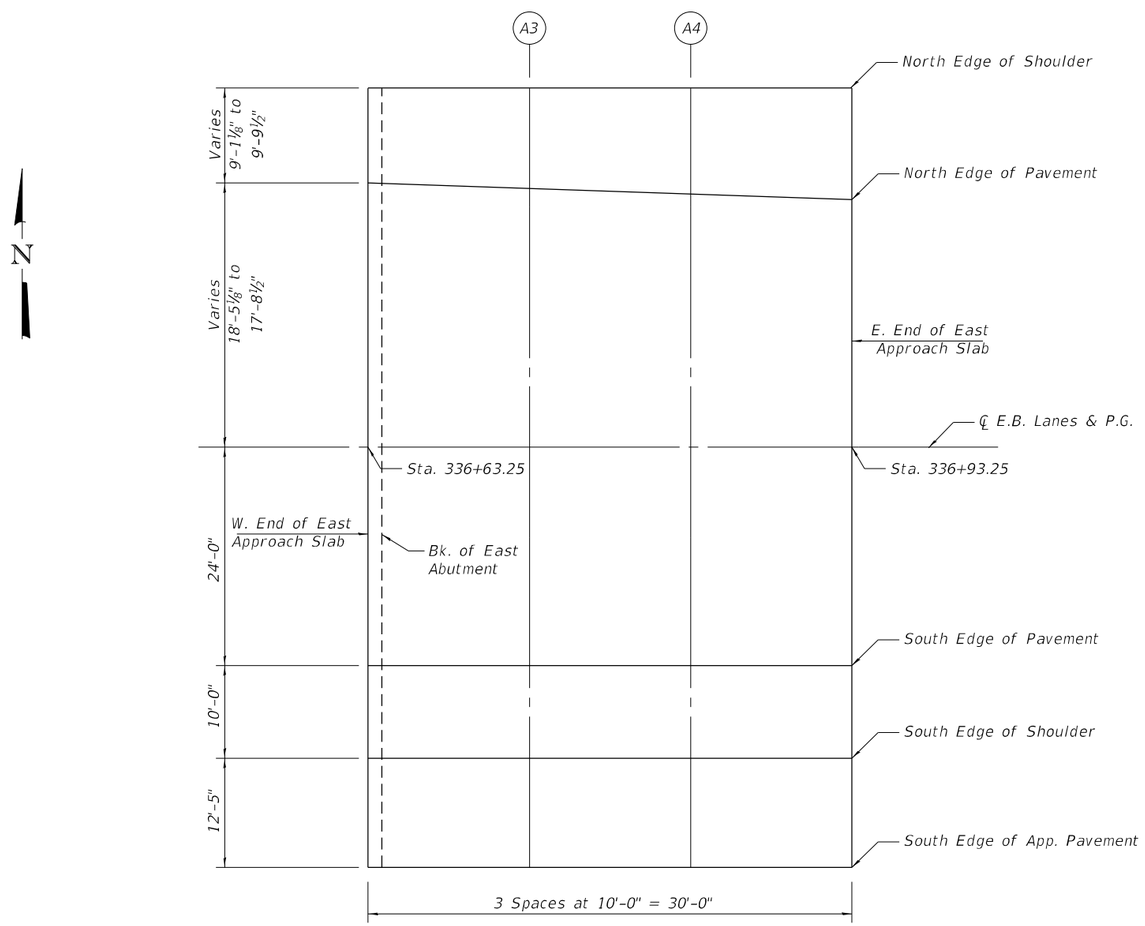

PLAN
(East Approach)

SOUTH EDGE OF PAVEMENT

Location	Station	Offset	Theoretical Grade Elevations	Theoretical Grade Elevations Adjusted For Grinding
W. End West Appr. Slab	336+63.25	24.00	414.82	414.84
A3	336+73.25	24.00	414.81	414.83
A4	336+83.25	24.00	414.79	414.81
E. End West Appr. Slab	336+93.75	24.00	414.77	414.79

SOUTH EDGE OF SHOULDER

Location	Station	Offset	Theoretical Grade Elevations	Theoretical Grade Elevations Adjusted For Grinding
W. End West Appr. Slab	336+63.25	34.00	414.62	414.64
A3	336+73.25	34.00	414.61	414.63
A4	336+83.25	34.00	414.59	414.61
E. End West Appr. Slab	336+93.75	34.00	414.57	414.59

SOUTH EDGE OF APP. PAVEMENT

Location	Station	Offset	Theoretical Grade Elevations	Theoretical Grade Elevations Adjusted For Grinding
W. End West Appr. Slab	336+63.25	46.42	414.37	414.39
A3	336+73.25	46.42	414.36	414.38
A4	336+83.25	46.42	414.34	414.36
E. End West Appr. Slab	336+93.75	46.42	414.33	414.35

E-AS1 2-17-2017

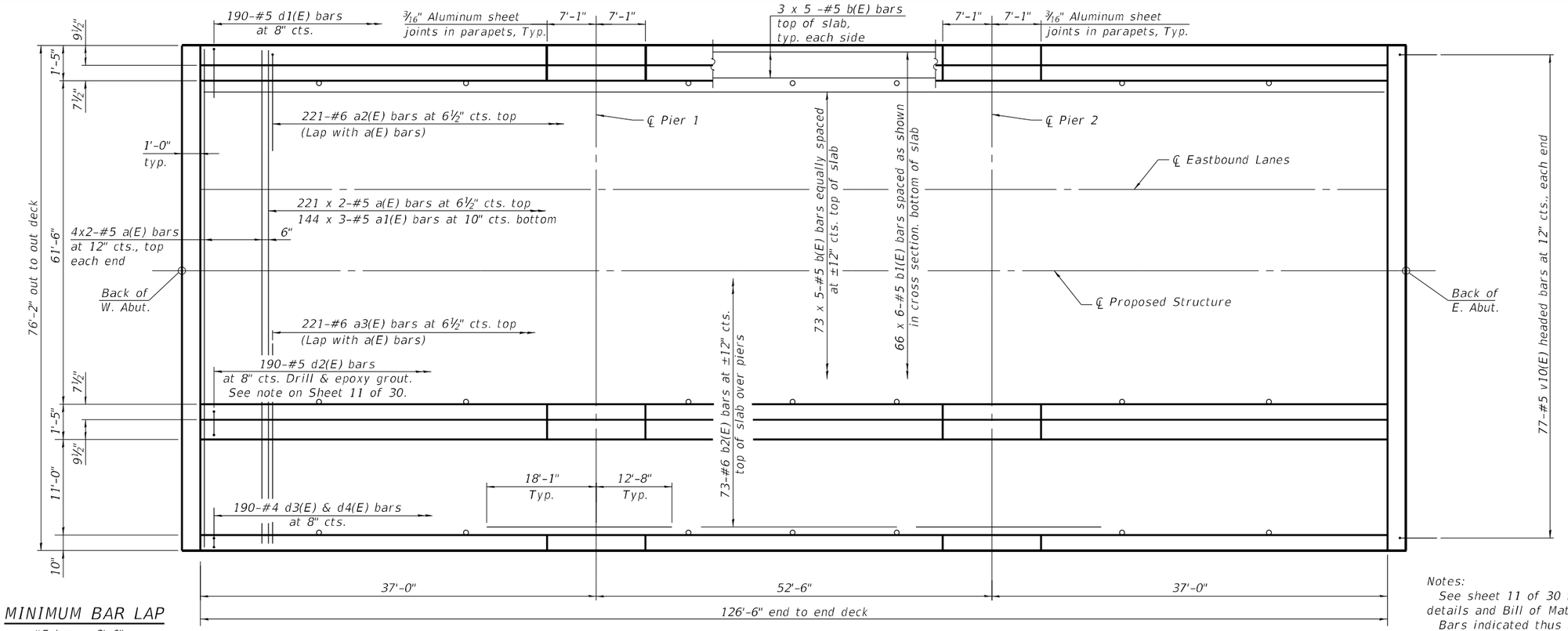

MINIMUM BAR LAP

#5 bar = 3'-6"
#6 bar = 3'-7"

PLAN

Notes:
See sheet 11 of 30 for superstructure details and Bill of Material.
Bars indicated thus 20 x 3-#5 etc. indicates 20 lines of bars with 3 lengths per line.

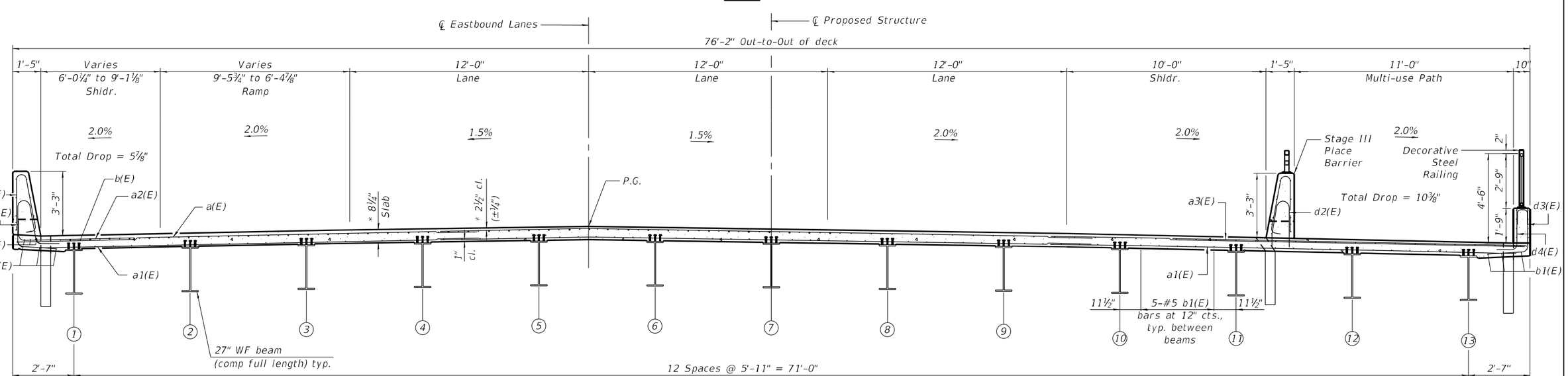

NEAR PIER

CROSS SECTION

(Looking East)
* Prior to grinding

NEAR MIDSPAN

MODEL: Default
FILE NAME: P:\5XXX\50XX-51XX\5000 - IDOT PTB 200-038 D9 IL 13 Crab Orchard Bridges\24-Structures\CAD-MS\100-0108-78373-009-Superstructure Plan.dgn
3/11/2025 6:32:09 AM

CIVIL DESIGN, INC.
WBE / DBE
EFFINGHAM, IL
LICENSE #184.003222

USER NAME =	DESIGNED – JAG	REVISED –	
	CHECKED – JGS	REVISED –	
PLOT SCALE =	DRAWN – JAG	REVISED –	
PLOT DATE =	CHECKED – JGS	REVISED –	

STATE OF ILLINOIS
DEPARTMENT OF TRANSPORTATION

SUPERSTRUCTURE PLAN
STRUCTURE NO. 100-0108

SHEET 9 OF 30 SHEETS

F.A.P. RTE.	SECTION	COUNTY	TOTAL SHEETS	SHEET NO.
331	(1-4)R-5,RS-2,B-1,B-2,B-3,B-4	WILLIAMSON	519	291
		CONTRACT NO. 78373		
		ILLINOIS FED. AID PROJECT		

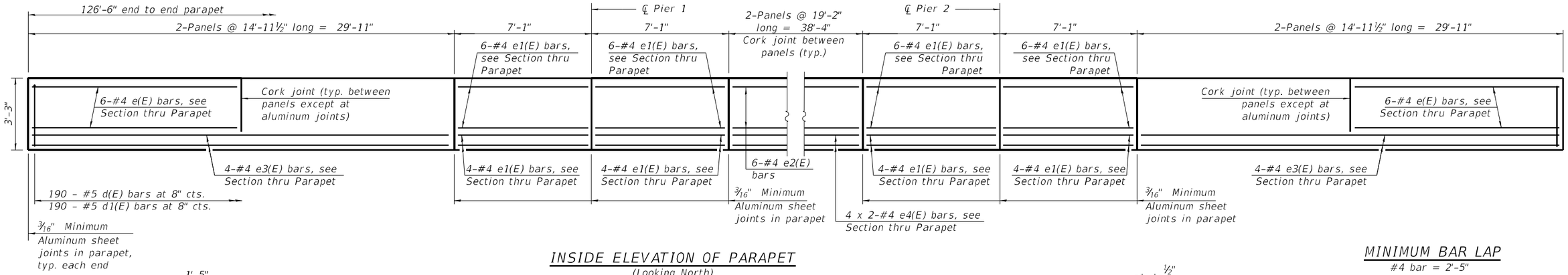

INSIDE ELEVATION OF PARAPET

(Looking North)
(North parapet shown, South parapet mirrored)

MINIMUM BAR LAP

#4 bar = 2'-5"

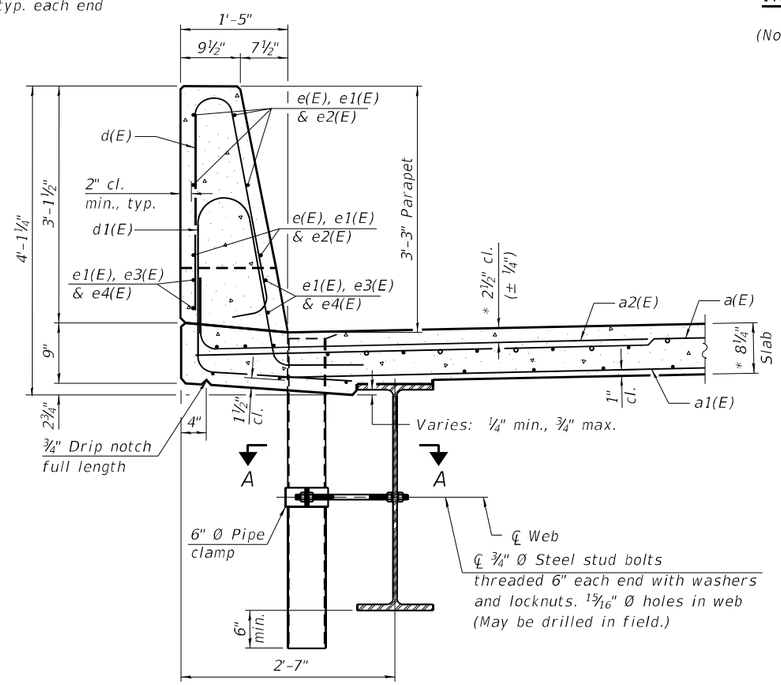

* Prior to grinding

SECTION THRU PARAPET

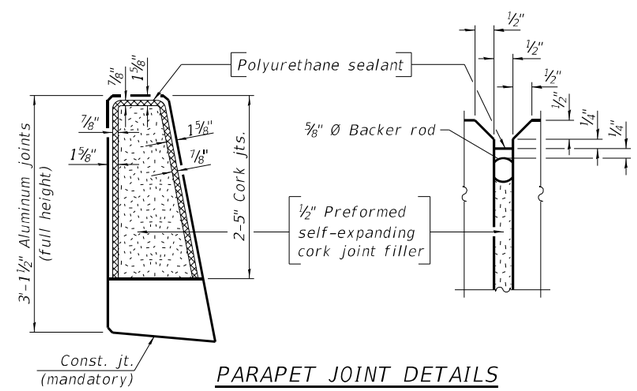

PARAPET JOINT DETAILS

Notes:

Fiberglass pipe shall conform to ASTM D2996, with short-time rupture strength hoop tensile stress of 30,000 p.s.i. minimum.

The exterior surfaces of the floor drains shall be painted according to Article 506 with the finish coat as specified. The exterior surfaces of the drains shall be cleaned according to the Society of Protective Coating's Spec. SSPC-SP1 prior to painting.

The top portion of aluminum floor drains shall be coated with 5 mils of either bitumen paint or epoxy paint to minimize reaction with wet concrete.

The clamping device shall be galvanized according to AASHTO M 232. Cost of clamping device included with Floor Drains.

The 3/16" Min. aluminum sheet shall be ASTM B 209 alloy 3003-H14 and coated with 5 mils of either bitumen paint or epoxy paint to minimize reaction with wet concrete. Cost included with Concrete Superstructure.

The polyurethane sealant shall be according to Article 1050.04 of the Std. Spec. and the color shall be gray.

Bar terminators paid for separately. See Total Bill of Material.

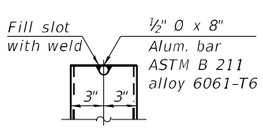

ALUMINUM TUBE

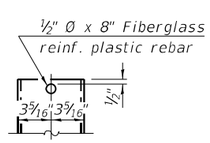

FIBERGLASS PIPE

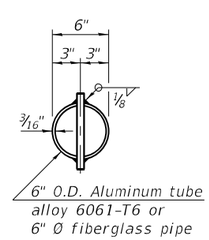

TOP PLAN

(Showing aluminum tube)

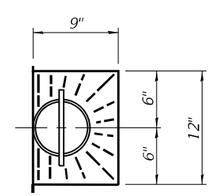

TOP PLAN

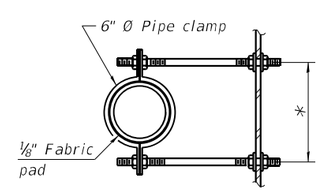

SECTION A-A

*Dimension as required by pipe clamp

SDI-SB-2 10-27-2023

MODEL: Default
FILE NAME: P:\5XXX\50XX-51XX\5000 - IDOT PTB 200-038 D9 IL 13 Crab Orchard Bridges\24-Structures\CAD-MS\100-0108-78373-010-Superstructure Details 1.dgn
3/11/2025 6:32:35 AM

CIVIL DESIGN, INC. WBE / DBE
EFFINGHAM, IL
LICENSE #184.003222

USER NAME =	DESIGNED - JAG	REVISED -	
	CHECKED - JGS	REVISED -	
PLOT SCALE =	DRAWN - JAG	REVISED -	
PLOT DATE =	CHECKED - JGS	REVISED -	

STATE OF ILLINOIS
DEPARTMENT OF TRANSPORTATION

SUPERSTRUCTURE DETAILS 1
STRUCTURE NO. 100-0108

SHEET 10 OF 30 SHEETS

F.A.P. RTE.	SECTION	COUNTY	TOTAL SHEETS	SHEET NO.
331	(1-4)R-5,RS-2,B-1,B-2,B-3,B-4	WILLIAMSON	519	292
		CONTRACT NO. 78373		
		ILLINOIS	FED. AID PROJECT	

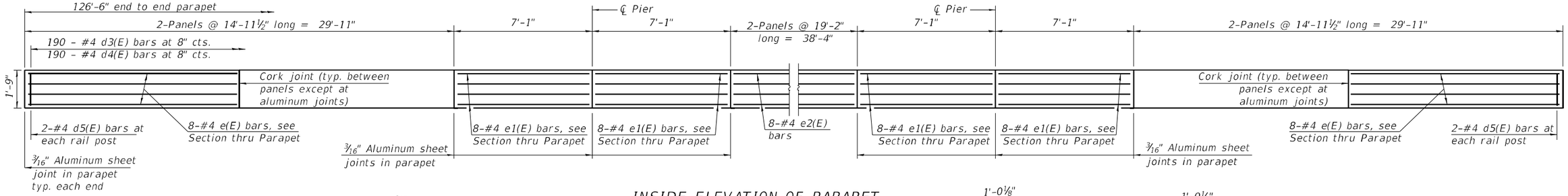

INSIDE ELEVATION OF PARAPET

(Looking South)

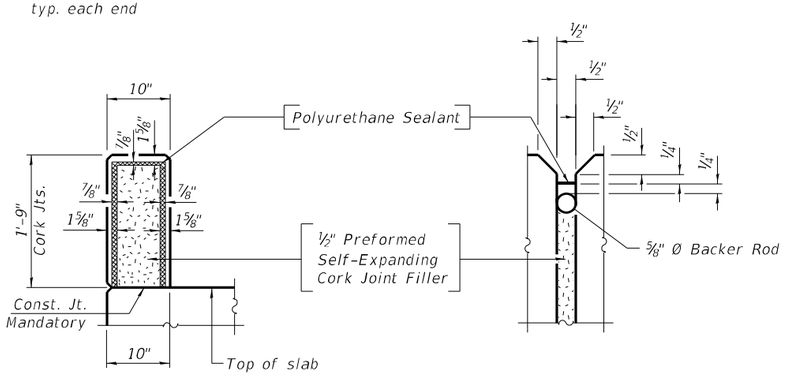

PARAPET JOINT DETAILS

Notes:
The Polyurethane Sealant shall be according to Article 1050.04 of the Std. Spec. and the color shall be gray.

MINIMUM BAR LAP

#4 bar = 2'-5"

** Drill and set #5 d2(E) bar according to Article 509.06 of the Standard Specifications. Drilled holes shall be roughened or scored per manufacturer's recommendations. Maximum depth of hole shall not exceed 6". Contractor shall take all necessary precautions to prevent drilled hole interference with deck reinforcement bars. Locate longitudinal bars to miss drilled locations. Locate drilled holes to miss transverse bars in deck. Transverse bars shall be set to miss the pipe drains.

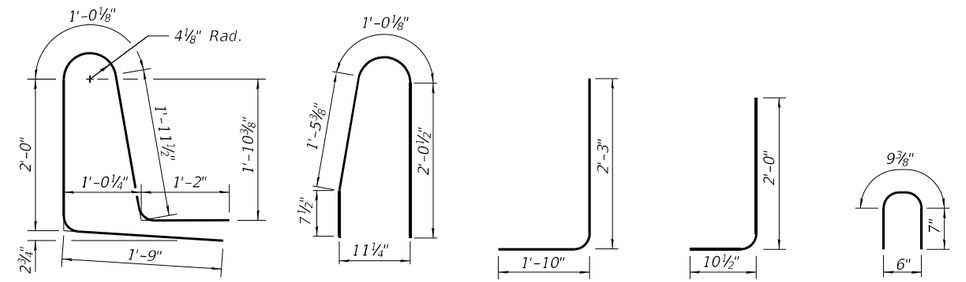

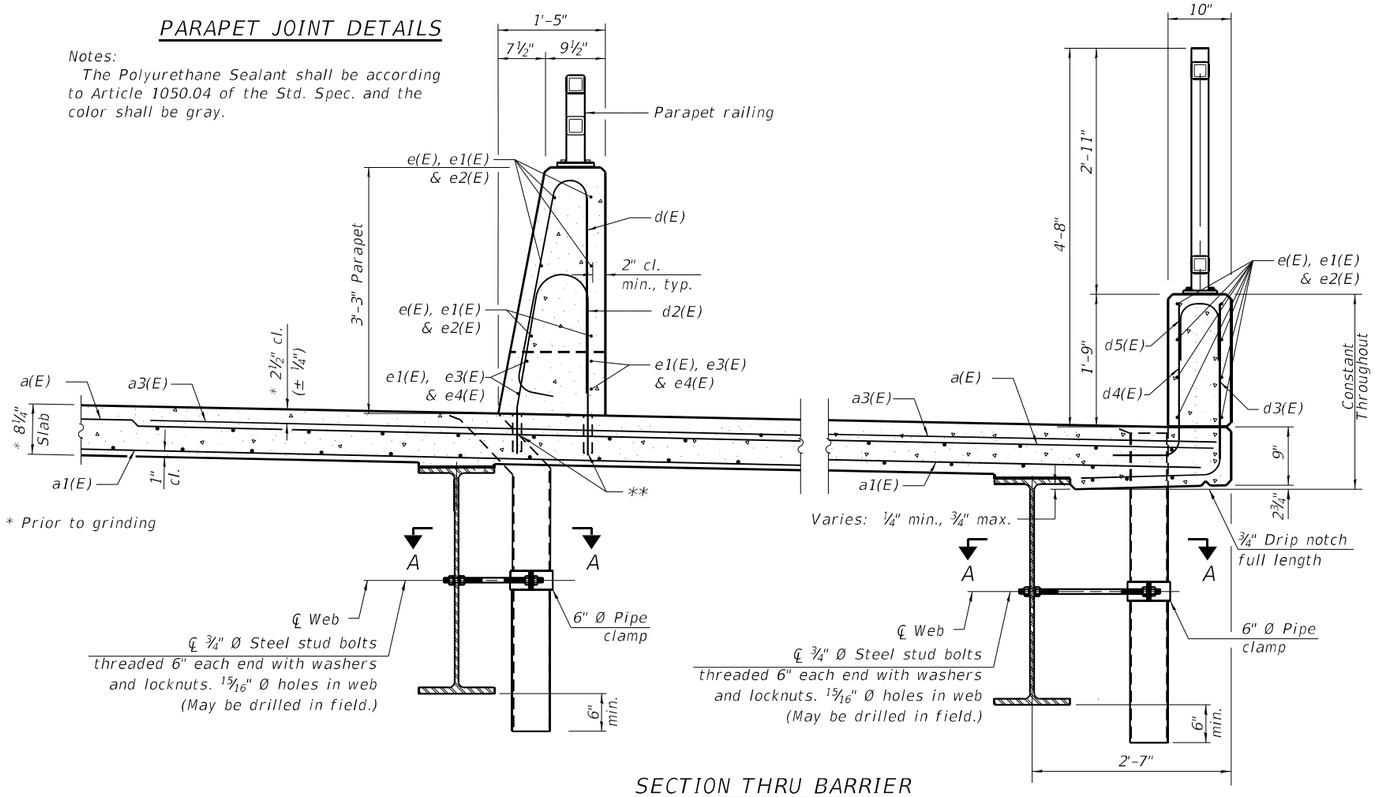

SECTION THRU BARRIER

(See sheet 10 of 30 for Section A-A)

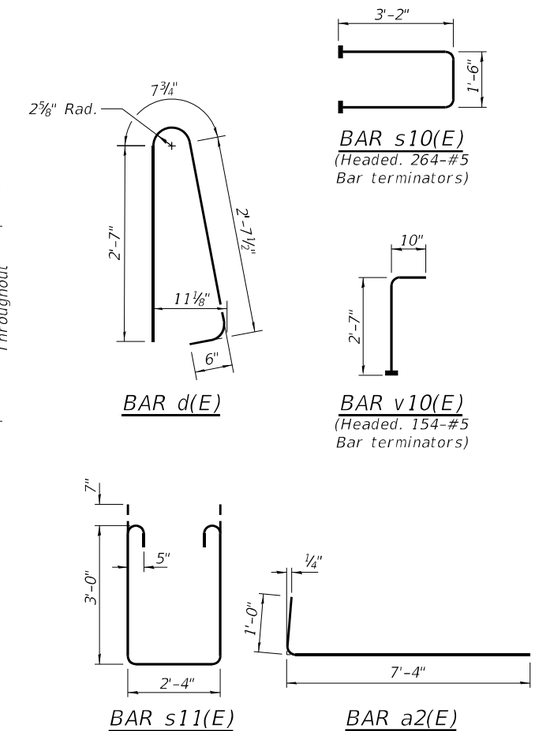

SUPERSTRUCTURE BILL OF MATERIAL

Bar	No.	Size	Length	Shape
a(E)	458	#5	39'-8"	
a1(E)	432	#5	27'-9"	
a2(E)	221	#6	8'-4"	
a3(E)	221	#6	20'-2"	
b(E)	395	#5	28'-10"	
b1(E)	396	#5	24'-0"	
b2(E)	128	#6	30'-9"	
d(E)	380	#5	6'-5"	
d1(E)	190	#5	7'-11"	
d2(E)	190	#5	5'-6"	
d3(E)	190	#4	4'-7"	
d4(E)	190	#4	2'-11"	
d5(E)	88	#4	2'-0"	
e(E)	80	#4	13'-8"	
e1(E)	112	#4	6'-9"	
e2(E)	40	#4	18'-10"	
e3(E)	16	#4	29'-7"	
e4(E)	16	#4	22'-0"	
m10(E)	18	#6	29'-0"	
m11(E)	72	#6	5'-6"	
m12(E)	12	#6	2'-3"	
s10(E)	132	#5	7'-10"	
s11(E)	132	#5	9'-6"	
v10(E)	154	#5	3'-5"	
Concrete Superstructure			Cu. Yd.	285.8
Reinforcement Bars, Epoxy Coated			Pounds	81,540

MODEL: Default
FILE NAME: P:\5XXX50XX-51XX\5000 - IDOT PTB 200-038 D9 IL 13 Crab Orchard Bridges\24-Structures\CAD-MS\100-0108-78373-011-Superstructure Details 2.dgn
3/11/2025 6:33:02 AM

CDI — CIVIL DESIGN, INC. WBE / DBE — EFFINGHAM, IL — LICENSE #184.003222

USER NAME =	DESIGNED - JAG	REVISED -	
	CHECKED - JGS	REVISED -	
PLOT SCALE =	DRAWN - JAG	REVISED -	
PLOT DATE =	CHECKED - JGS	REVISED -	

STATE OF ILLINOIS
DEPARTMENT OF TRANSPORTATION

SUPERSTRUCTURE DETAILS 2
STRUCTURE NO. 100-0108

SHEET 11 OF 30 SHEETS

F.A.P. RTE.	SECTION	COUNTY	TOTAL SHEETS	SHEET NO.
331	(1-4)R-5,RS-2,B-1,B-2,B-3,B-4	WILLIAMSON	519	293

CONTRACT NO. 78373

ILLINOIS FED. AID PROJECT

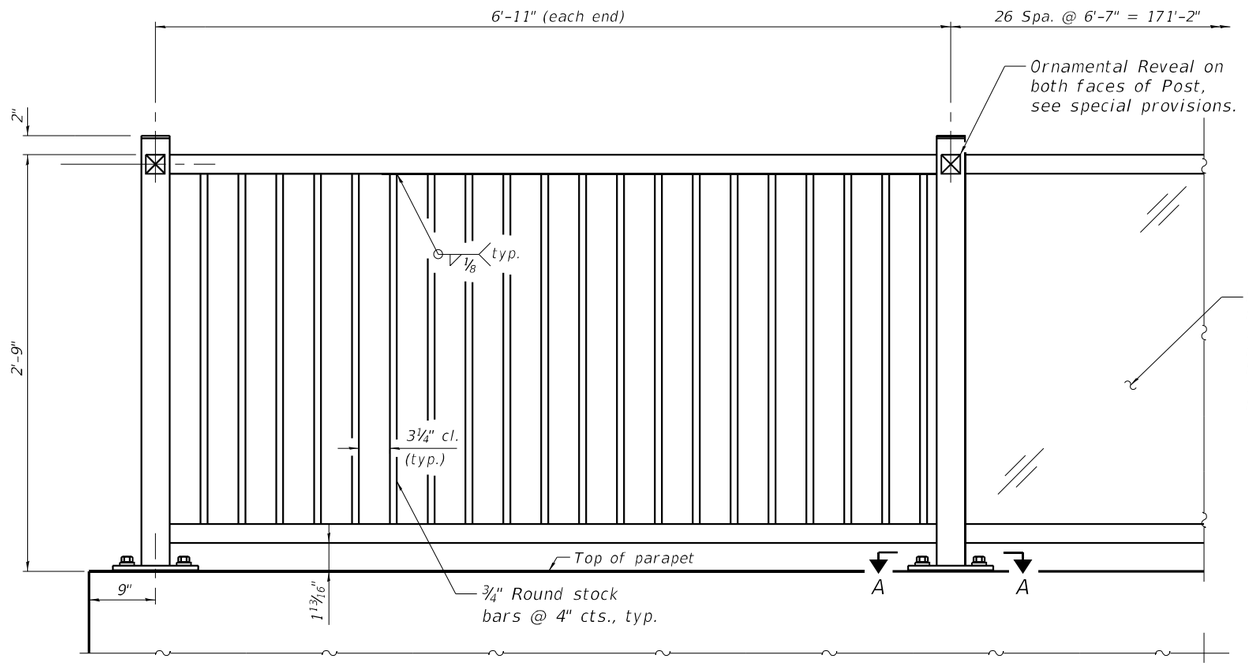

DECORATIVE STEEL RAILING ELEVATION

(Inside face)

Aesthetic details to be coordinated with the District

Decorative Panels to be provided and installed in railing spans 2, 5, 8, 11, 14, 17, 20, 23 and 26, for a total of nine panels. Panels 2, 11, & 20 - "Fish", Panels 5, 14, & 23 - "Ducks", Panels 8, 17, & 26 - "Bigfoot". See Special Provisions for Decorative Steel Railing.

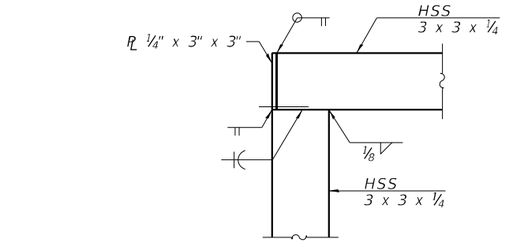

DETAIL A

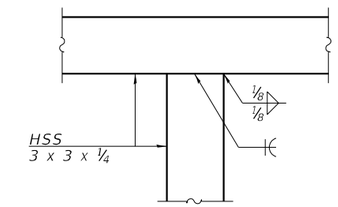

DETAIL B

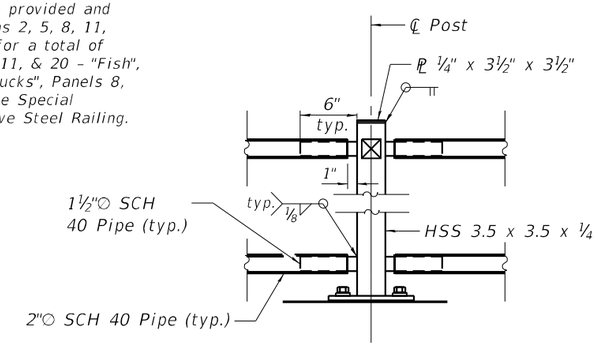

DECORATIVE STEEL RAILING POST

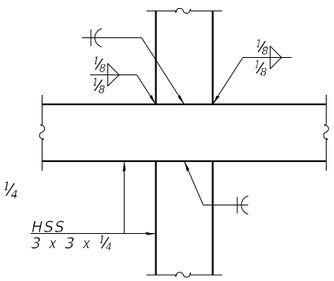

DETAIL C

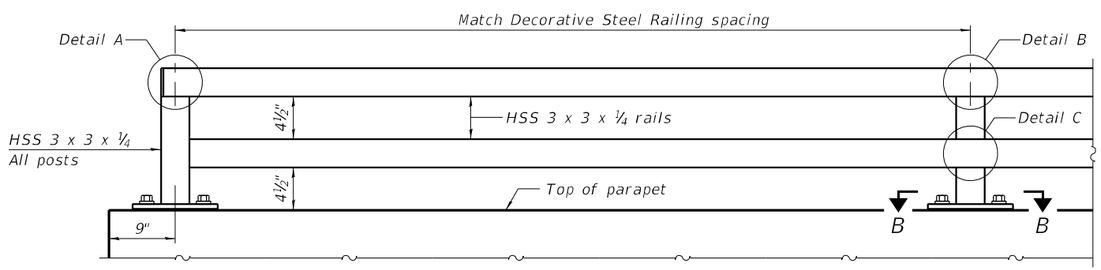

ELEVATION OF SOUTH PARAPET RAILING

(Inside face)

Notes:
All post, railing, splices, anchor devices and bent plates shall be painted black.

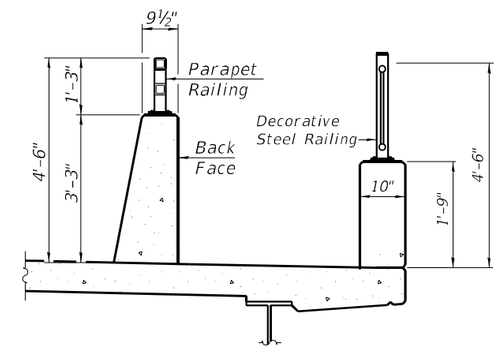

SECTION THRU DECK

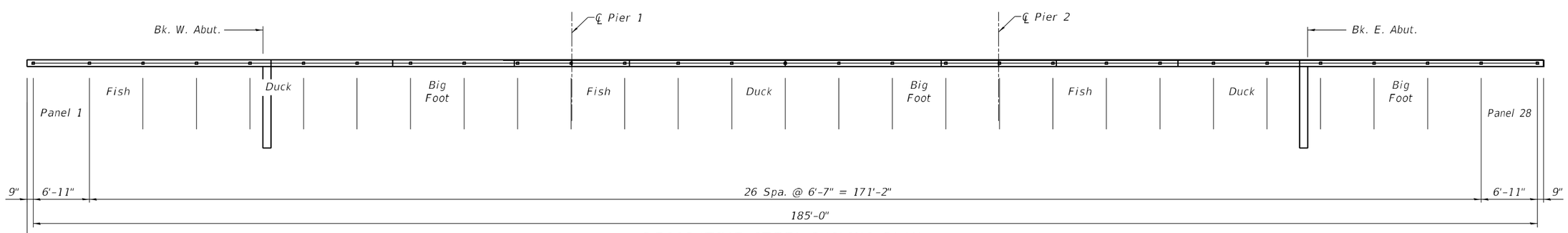

DECORATIVE STEEL RAILING PLAN

MODEL: Default
FILE NAME: P:\5XXX\50XX-51XX\5000 - IDOT PTB 200-038 D9 IL 13 Crab Orchard Bridges\24-Structures\CAD-MS\100-0108-78373-012-Superstructure Details 3.dgn
3/11/2025 6:33:27 AM

CIVIL DESIGN, INC.
WBE / DBE
EFFINGHAM, IL
LICENSE #184.003222

USER NAME =	DESIGNED – JAG	REVISED –	
	CHECKED – JGS	REVISED –	
PLOT SCALE =	DRAWN – JAG	REVISED –	
PLOT DATE =	CHECKED – JGS	REVISED –	

STATE OF ILLINOIS
DEPARTMENT OF TRANSPORTATION

SUPERSTRUCTURE DETAILS 3
STRUCTURE NO. 100-0108

SHEET 12 OF 30 SHEETS

F.A.P. RTE.	SECTION	COUNTY	TOTAL SHEETS	SHEET NO.
331	(1-4)R-5,RS-2,B-1,B-2,B-3,B-4	WILLIAMSON	519	294
		CONTRACT NO. 78373		
	ILLINOIS	FED. AID PROJECT		

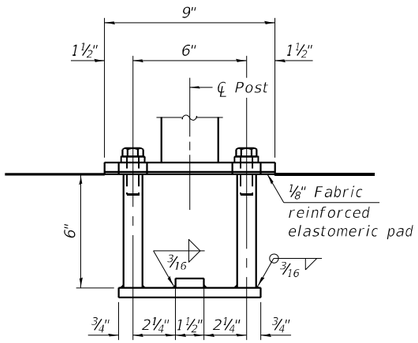

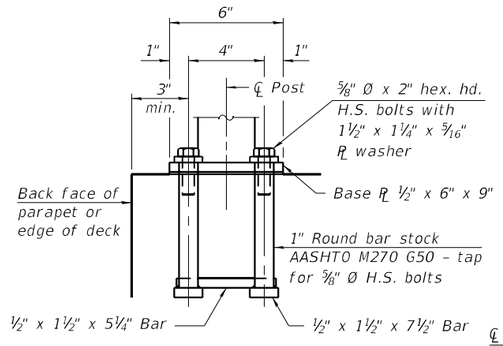

ANCHORAGE ASSEMBLY

In lieu of the cast-in-place anchor device shown, the Contractor has the option of drilling and setting ⅝"Ø fully threaded anchor rods with the same plate washers as specified above and heavy hex lock nuts according to Article 509.06 of the Standard Specifications. Embedment shall be according to the manufacturer's specifications.

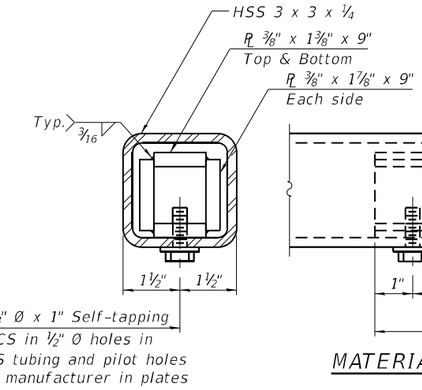

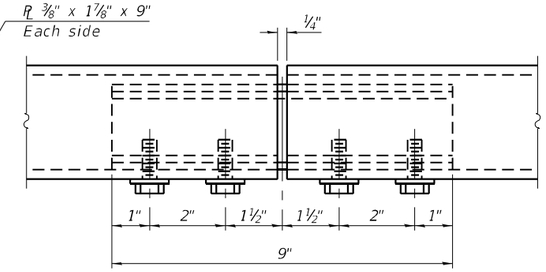

MATERIAL SPLICE

Notes:

Place reinforcement bars to miss anchor rod locations.

CVN testing is not required for the HSS tubing used in the Bicycle Railing.

All HSS tubing used for the Parapet Railing shall be CVN tested according to Article 1006.34(b) of the Standard Specifications.

All HSS tubing used for the Parapet Railing shall be ASTM A500 grade C.

All base plates used for the Parapet Railing shall be AASHTO M270 grade 50.

All heavy hex nuts shall be according to ASTM A 563 grade DH.

All fully threaded anchor rods shall be ASTM F1554 grade 105.

The post base plate shall be fastened to the curb snug tight and given an additional ⅛" turn.

Rail splice inserts may be built out of bent plates of the same thicknesses and outside geometry limits as the 4 plate rail splice inserts shown.

When the contract specifies a galvanized railing, all steel rail elements shall be galvanized according to Article 509.05 of the Standard Specifications. When the contract specifies a painted railing, all posts, rail, splices, anchor devices and plates of the railing shall be painted according to the paint system for railings as specified in the General Notes.

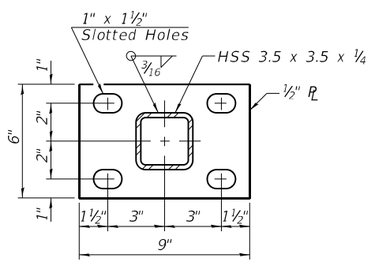

SECTION A-A

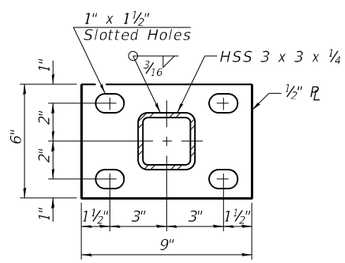

SECTION B-B

BILL OF MATERIAL

Item	Unit	Quantity
Decorative Steel Railing	Foot	185.0
Parapet Railing	Foot	185.0

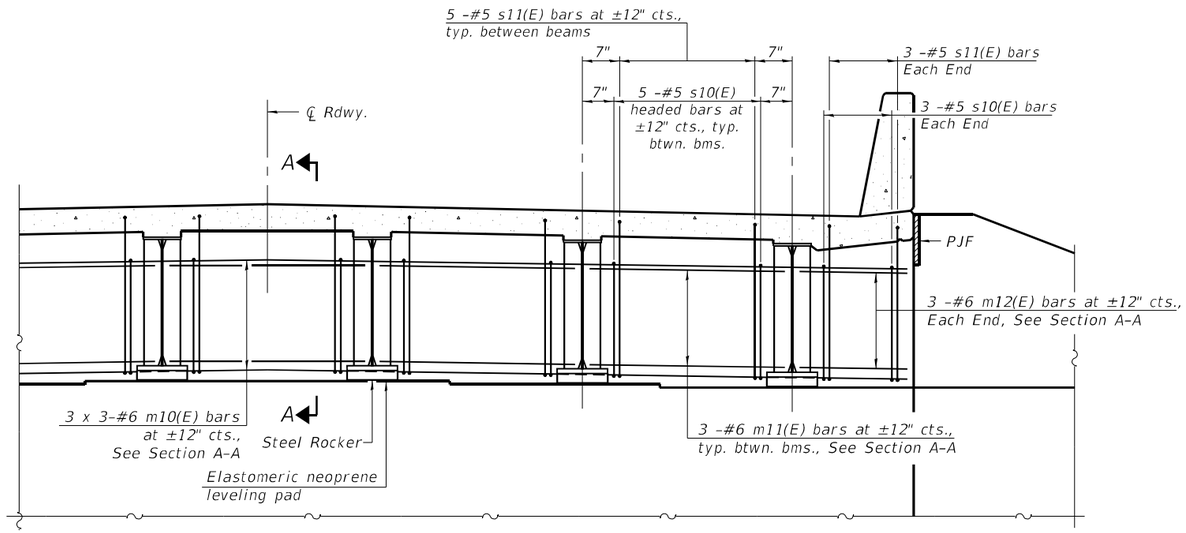

DIAPHRAGM AT ABUTMENT

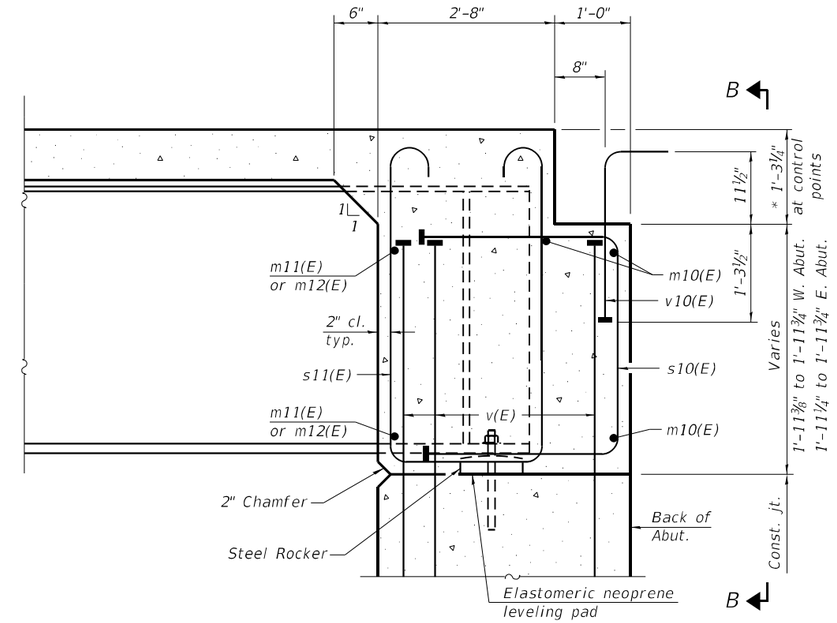

SECTION A-A

* Prior to grinding

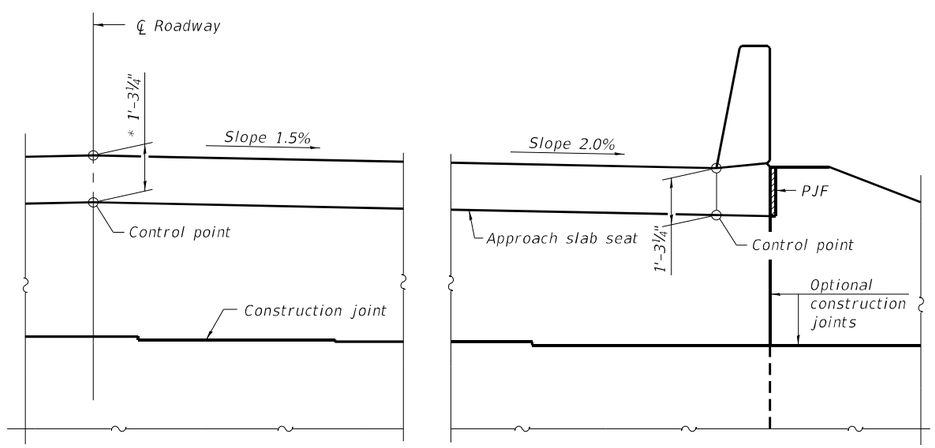

VIEW B-B

* Prior to grinding

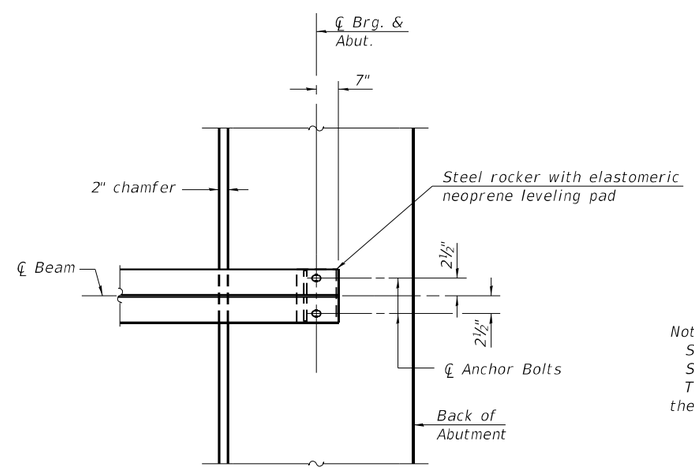

PLAN AT ABUTMENT

(Showing bottom flange of beam)

Notes:

See sheet 11 of 30 for superstructure details and Bill of Material.

See sheet 15 of 30 for PJF details.

The approach slab seat shall have a constant slope determined from the control points shown.

DIA-SB-0 2-1-2023

MODEL: Default
FILE NAME: P:\5XX\50XX-51XX\5000 - IDOT PTB 200-038 D9 IL 13 Crab Orchard Bridges\24-Structures\CAD-MS\100-0108-78373-014-Diaphragm Details.dgn

CDI — CIVIL DESIGN, INC. WBE / DBE — EFFINGHAM, IL — LICENSE #184.003222

USER NAME =	DESIGNED – JAG	REVISED –
	CHECKED – JGS	REVISED –
PLOT SCALE =	DRAWN – JAG	REVISED –
PLOT DATE =	CHECKED – JGS	REVISED –

STATE OF ILLINOIS
DEPARTMENT OF TRANSPORTATION

DIAPHRAGM DETAILS
STRUCTURE NO. 100-0108

SHEET 14 OF 30 SHEETS

F.A.P. RTE.	SECTION	COUNTY	TOTAL SHEETS	SHEET NO.
331	(1-4)R-5,RS-2,B-1,B-2,B-3,B-4	WILLIAMSON	519	296

CONTRACT NO. 78373

ILLINOIS FED. AID PROJECT

3/11/2025 6:34:18 AM

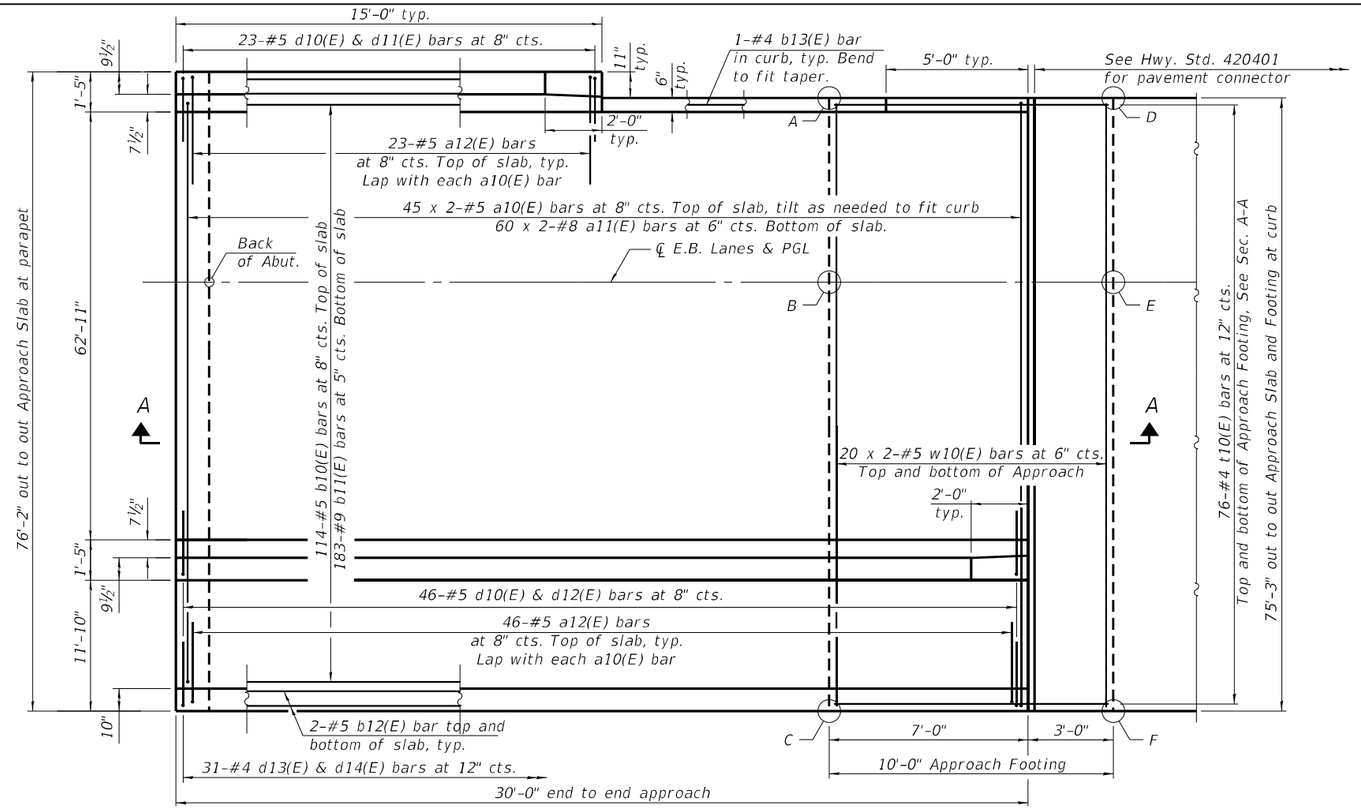

PLAN

(East approach slab shown; West approach slab similar by 180° rotation)

TOP AND BOTTOM ELEVATIONS FOR APPROACH FOOTING

East Approach			West Approach		
Point/ Location	Top	Bottom	Point/ Location	Top	Bottom
A - NW	413.47	412.64	A - NW	413.48	412.65
B - WCL	413.96	413.12	B - WCL	413.97	413.14
C - SW	413.09	412.26	C - SW	413.10	412.27
D - NE	413.45	412.62	D - NE	413.49	412.66
E - ECL	413.94	413.11	E - ECL	413.98	413.15
F - SE	413.07	412.24	F - SE	413.11	412.28

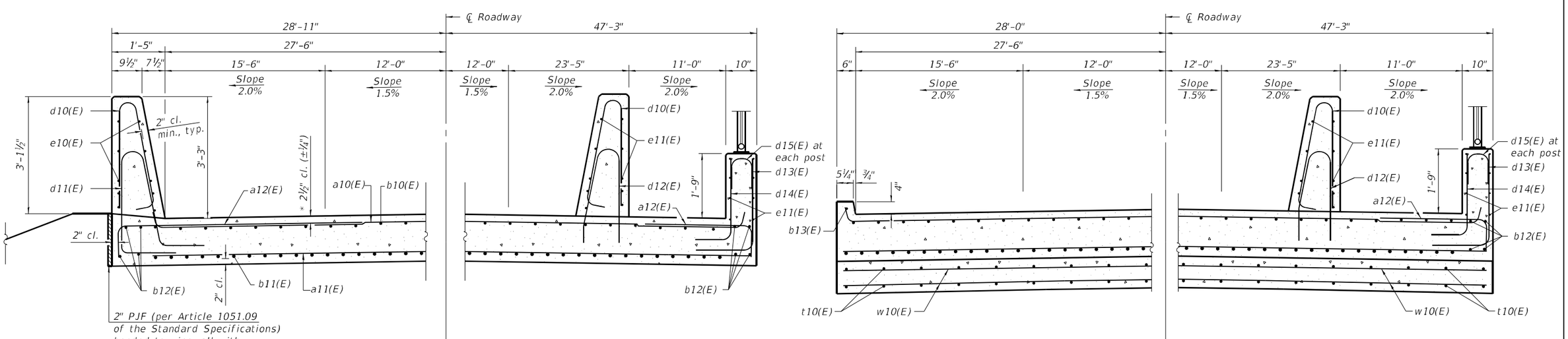

NEAR ABUTMENT

* Prior to grinding

CROSS SECTION

(Looking East)

AT APPROACH FOOTING

(Sheet 1 of 2)

CDI — CIVIL DESIGN, INC. WBE / DBE — EFFINGHAM, IL LICENSE #184.003222	USER NAME =	DESIGNED – JAG	REVISED –
		CHECKED – JGS	REVISED –
	PLOT SCALE =	DRAWN – JAG	REVISED –
	PLOT DATE =	CHECKED – JGS	REVISED –

STATE OF ILLINOIS
DEPARTMENT OF TRANSPORTATION

BRIDGE APPROACH SLAB DETAILS
STRUCTURE NO. 100-0108

SHEET 15 OF 30 SHEETS

F.A.P. RTE.	SECTION	COUNTY	TOTAL SHEETS	SHEET NO.
331	(1-4)R-5,RS-2,B-1,B-2,B-3,B-4	WILLIAMSON	519	297
		CONTRACT NO. 78373		
		ILLINOIS FED. AID PROJECT		

MODEL: Default
FILE NAME: P:\5XXX\50XX-51XX\5000 - IDOT PTB 200-038 D9 IL 13 Crab Orchard Bridges\24-Structures\CAD-MS\100-0108-78373-015-BridgeApproachSlab1.dgn
3/11/2025 6:34:38 AM

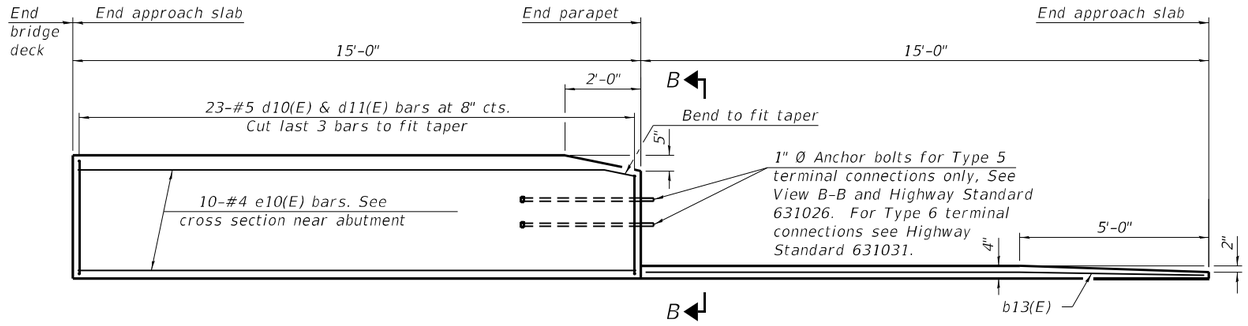

INSIDE ELEVATION OF PARAPET AND CURB

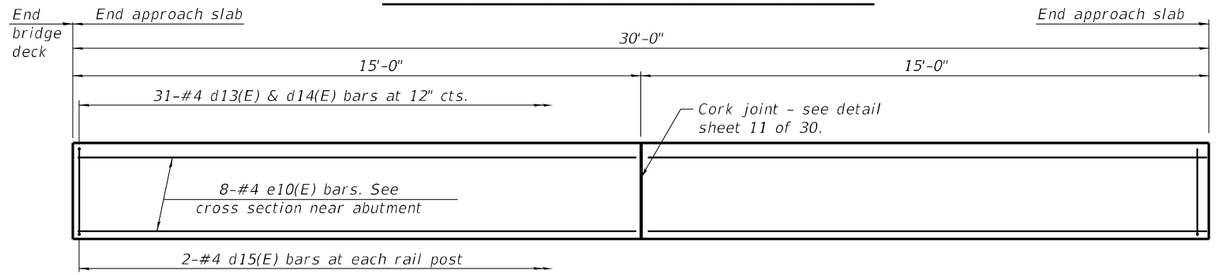

INSIDE ELEVATION OF SOUTH PARAPET

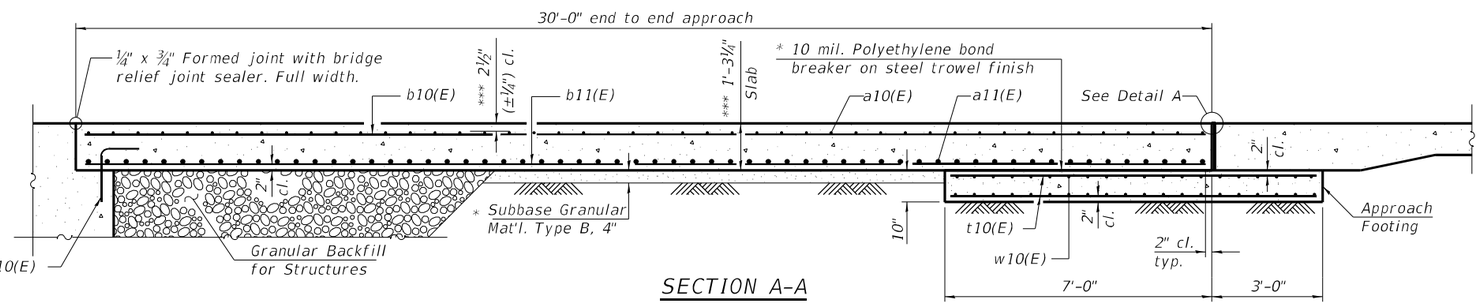

SECTION A-A

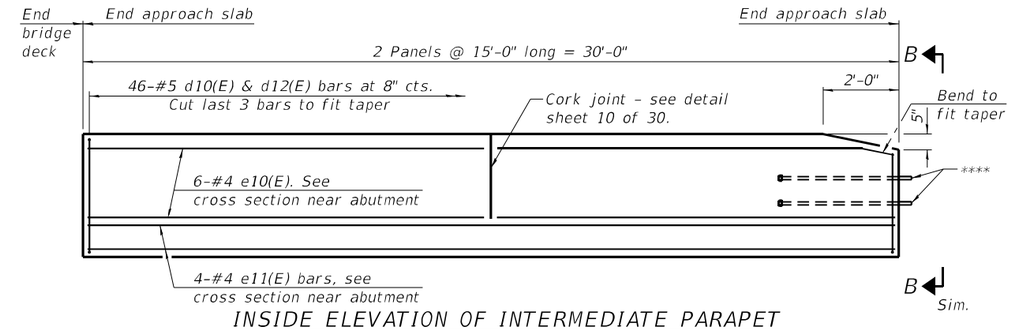

INSIDE ELEVATION OF INTERMEDIATE PARAPET

**** 1" Ø Anchor bolts for Type 5 terminal connections only, See View B-B and Highway Standard 631026. For Type 6 terminal connections see Highway Standard 631031.

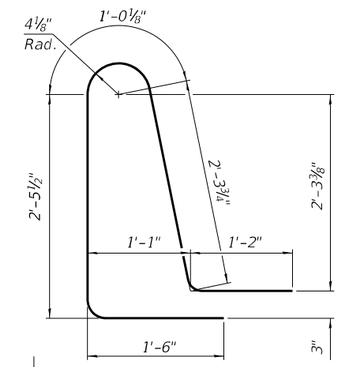

BAR d11(E)

Notes:

Parapet and barrier concrete shall be paid for as Concrete Superstructure.

Approach slab shall be paid for as Concrete Superstructure (Approach Slab).

Approach footing concrete shall be paid for as Concrete Structures.

The approach footing maximum applied service bearing pressure (Qmax) = 2.0 ksf.

Cost of excavation for approach footing included with Concrete Structures.

For Granular Backfill for Structures and drainage treatment details, see sheet 2 of 30.

TWO APPROACHES BILL OF MATERIAL

Bar	No.	Size	Length	Shape
a10(E)	180	#5	39'-8"	
a11(E)	240	#8	39'-8"	
a12(E)	138	#5	7'-4"	
b10(E)	228	#5	29'-8"	
b11(E)	366	#9	29'-8"	
b12(E)	16	#5	14'-8"	
b13(E)	2	#4	14'-8"	
d10(E)	138	#5	6'-5"	
d11(E)	46	#5	8'-6"	
d12(E)	92	#5	5'-2"	
d13(E)	62	#4	4'-1"	
d14(E)	62	#4	2'-11"	
d15(E)	20	#4	2'-0"	
e10(E)	76	#4	14'-8"	
e11(E)	8	#4	29'-8"	
t10(E)	304	#4	9'-8"	
w10(E)	160	#5	39'-9"	
Concrete Superstructure			Cu. Yd.	15.0
Concrete Superstructure (Approach Slab)			Cu. Yd.	214.0
Concrete Structures			Cu. Yd.	46.4
Reinforcement Bars, Epoxy Coated			Pound	89,810

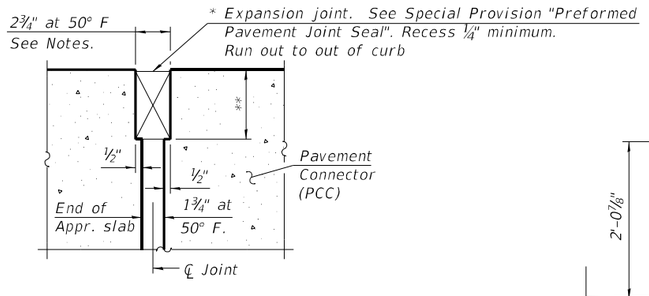

DETAIL A

* Cost included with Concrete Superstructure (Approach Slab).

** Per manufacturer recommendations

*** Prior to grinding

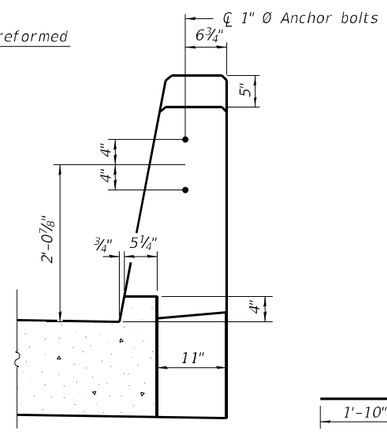

VIEW B-B

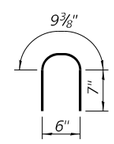

BAR d15(E)

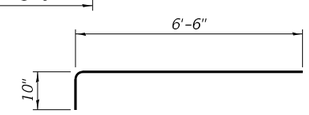

BAR a12(E)

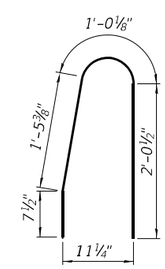

BAR d12(E)

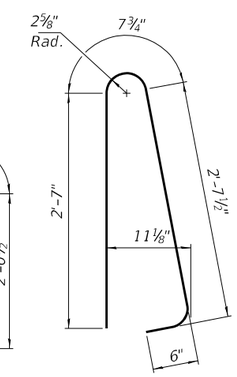

BAR d10(E)

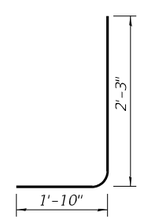

BAR d13(E)

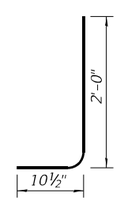

BAR d14(E)

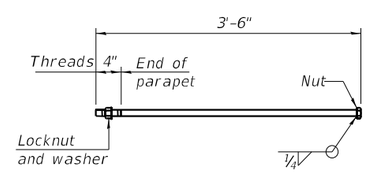

*1" Ø ANCHOR BOLT

(Anchor bolt assemblies shall be galvanized according to Article 1006.09 of the Standard Specifications)

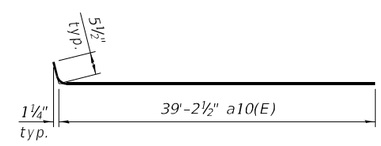

BAR a10(E)

(Sheet 2 of 2)

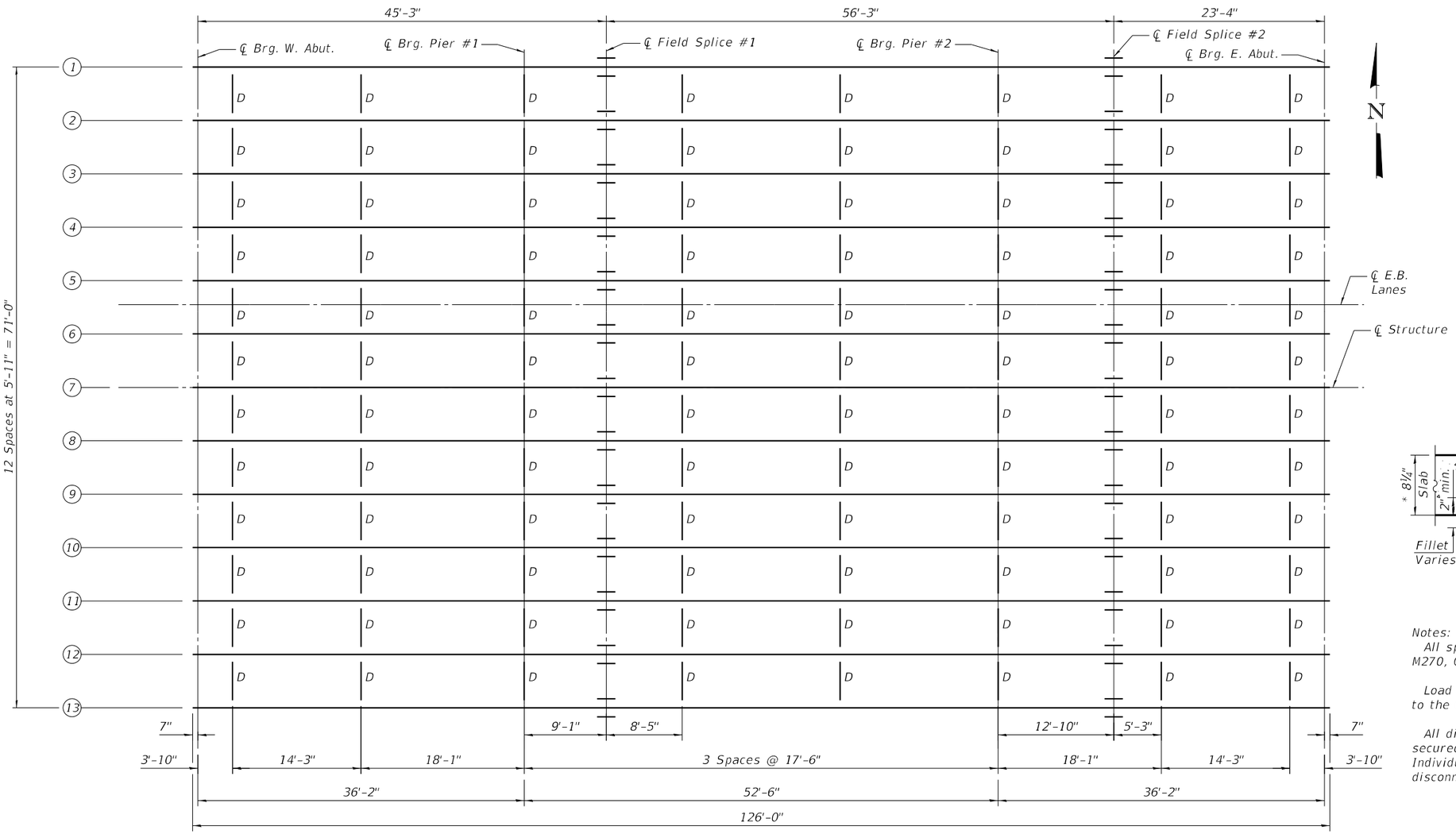

FRAMING PLAN

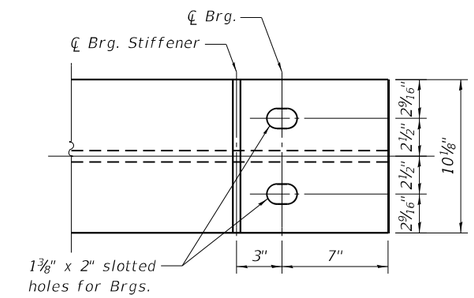

END OF BEAM DETAIL

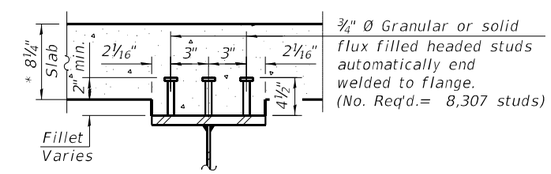

SECTION A-A

*Prior to grinding

Notes:

All splice plates and bearing stiffeners shall be ASTM M270, Grade 50.

Load carrying components designated "CVN" shall conform to the Charpy-V-Notch Impact Energy Requirement, Zone 2.

All diaphragms shall be installed as steel is erected and secured with erection pins and bolts except as otherwise noted. Individual diaphragms at supports may be temporarily disconnected to install bearing anchor rods.

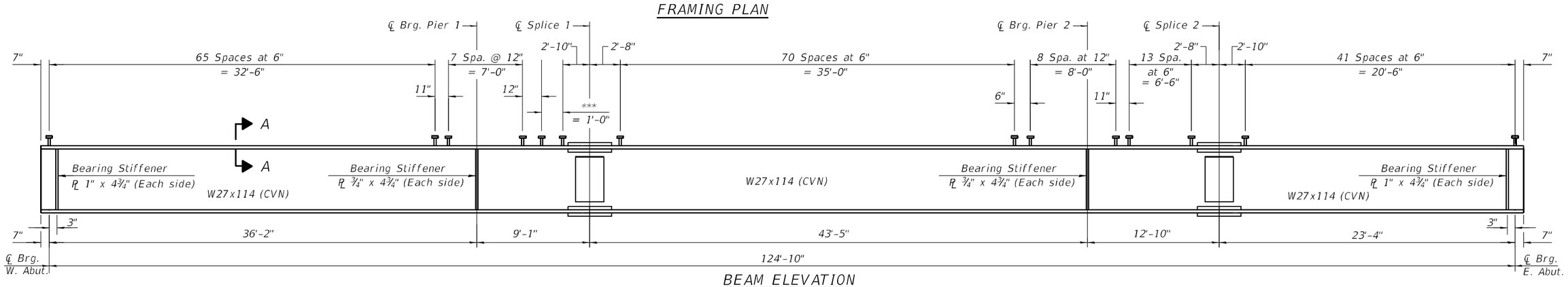

BEAM ELEVATION

*** 2 Spaces @ 6"

MODEL: Default
FILE NAME: P:\5XXX\50XX-51XX\5000 - IDOT PTB 200-038 D9 IL 13 Crab Orchard Bridges\24-Structures\CAD-MS\100-0108-78373-017-Structural Steel.dgn
3/11/2025 6:35:16 AM

CIVIL DESIGN, INC.
WBE / DBE
EFFINGHAM, IL
LICENSE #184.003222

USER NAME =	DESIGNED – JAG	REVISED –	
	CHECKED – JGS	REVISED –	
PLOT SCALE =	DRAWN – JAG	REVISED –	
PLOT DATE =	CHECKED – JGS	REVISED –	

STATE OF ILLINOIS
DEPARTMENT OF TRANSPORTATION

STRUCTURAL STEEL
STRUCTURE NO. 100-0108

SHEET 17 OF 30 SHEETS

F.A.P. RTE.	SECTION	COUNTY	TOTAL SHEETS	SHEET NO.
331	(1-4)R-5,RS-2,B-1,B-2,B-3,B-4	WILLIAMSON	519	299
		CONTRACT NO. 78373		
		ILLINOIS FED. AID PROJECT		

TOP OF WEB ELEVATIONS (FOR FABRICATION ONLY)

Location / Beam	Girder 1	Girder 2	Girder 3	Girder 4	Girder 5	Girder 6	Girder 7	Girder 8	Girder 9	Girder 10	Girder 11	Girder 12	Girder 13
℄ Brg. W. Abut.	414.01	414.12	414.24	414.33	414.42	414.41	414.32	414.22	414.10	413.99	413.87	413.74	413.63
℄ Brg. Pier 1	414.05	414.16	414.27	414.37	414.46	414.45	414.36	414.26	414.14	414.02	413.91	413.78	413.66
℄ Splice #1	414.05	414.16	414.27	414.37	414.46	414.45	414.36	414.26	414.14	414.02	413.91	413.78	413.66
℄ Brg. Pier 2	414.06	414.16	414.28	414.38	414.46	414.45	414.36	414.26	414.15	414.03	413.91	413.79	413.67
℄ Splice #2	414.04	414.15	414.27	414.37	414.45	414.44	414.35	414.25	414.13	414.02	413.90	413.78	413.66
℄ Brg. E. Abut.	414.02	414.13	414.25	414.35	414.43	414.42	414.33	414.23	414.11	414.00	413.88	413.76	413.64

Notes:
Alternate channels of equal depth and larger weight are permitted to facilitate material acquisition. Alternate channels, if utilized, shall be provided at no additional cost to the Department.

Two hardened washers required for each set of oversized holes.

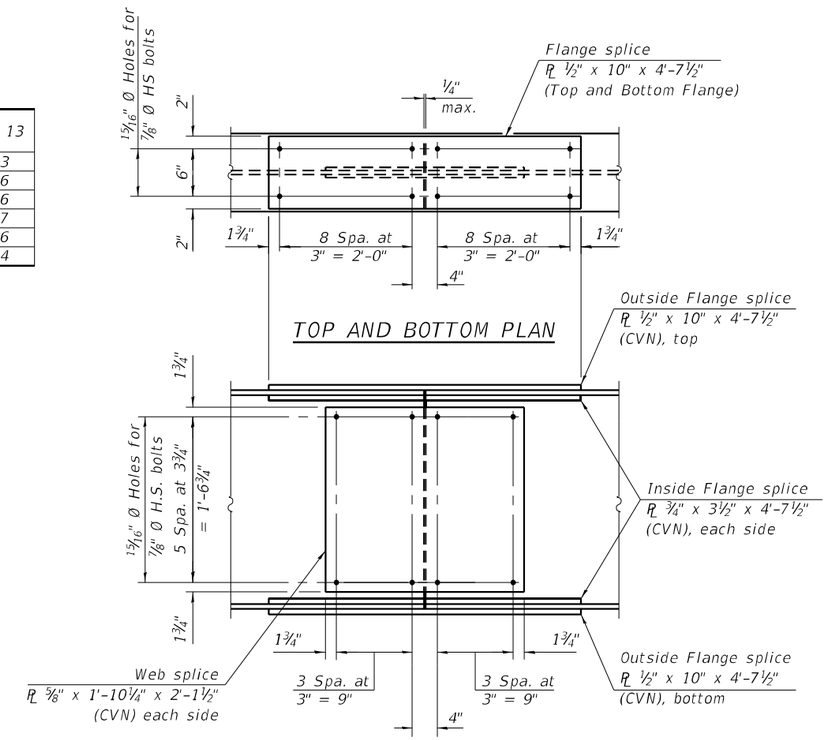

ELEVATION

SPLICE DETAIL
(26 Required)

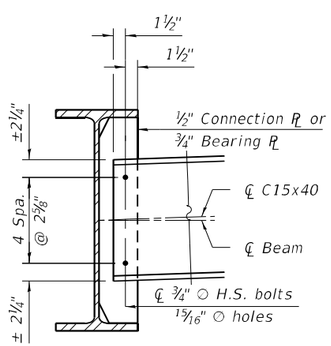

DIAPHRAGM D
(96 Required)

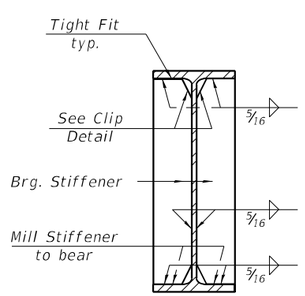

BEARING STIFFENER DETAIL

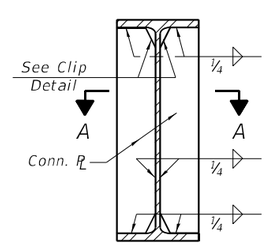

CONNECTION PLATE DETAIL

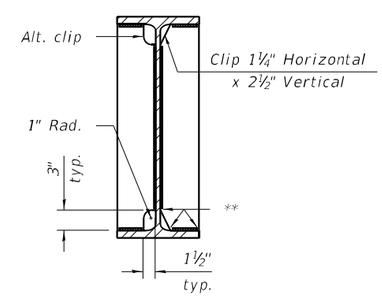

WELD LIMITS AND CLIP DETAILS

** Stop welds 1/4" (±1/8") from edges as shown. Typical.

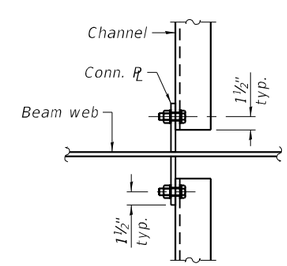

SECTION A-A

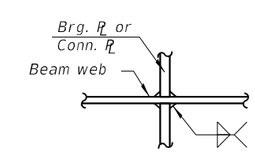

WEB WELD DETAIL