04-25-2025 LETTING ITEM 111

F.A.I. RTE.	SECTION	COUNTY	TOTAL SHEETS	SHEET NO.
70	(12-53B-1)BR-1	CLARK	93	1
	ILLINOIS	CONTRACT NO. 74A01		

STATE OF ILLINOIS
DEPARTMENT OF TRANSPORTATION

PROPOSED HIGHWAY PLANS

F.A.I. ROUTE 70
SECTION (12–53B–1)BR–1
PROJECT NHPP–M0S5(918)
SN 012–0006 & SN 012–0007
BRIDGE RECONSTRUCTION
CLARK COUNTY

C–97–086–20

D-97-076-20

LOCATION OF SECTION INDICATED THUS: –

****SEE SHEET NO. 2 FOR INDEX OF SHEETS****

TRAFFIC DATA

FAI–70 – WEST BOUND (SN 012–0006)

ADT:	13,800	(2021)	SU & MU = 52.2%	ACTUAL
	14,200	(2025)	SU & MU = 49.5%	CONSTRUCTION YEAR
	18,300	(2045)	SU & MU = 48.4%	DESIGN YEAR (20 YEAR)

FAI–70 – EAST BOUND (SN 012–0007)

ADT:	14,200	(2021)	SU & MU = 52.8%	ACTUAL
	14,400	(2025)	SU & MU = 49.5%	CONSTRUCTION YEAR
	18,400	(2045)	SU & MU = 48.7%	DESIGN YEAR (20 YEAR)

STATION EQUATION
222+17.74 BK
222+18.09 AH

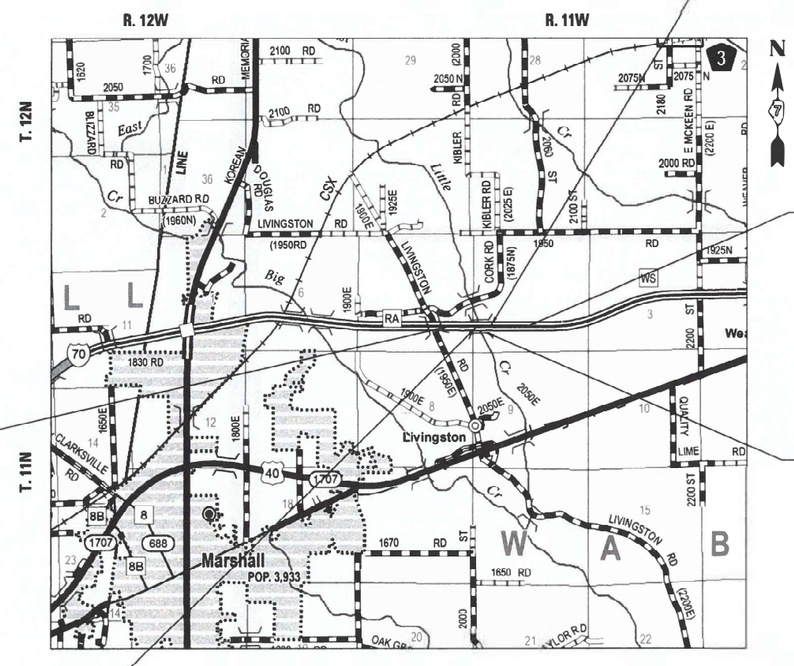

END PROJECT
STA 230+45.18
LAT 39.42170°
LONG -87.64072

BEGIN PROJECT
STA 199+95.00
LAT 39.42179°
LONG -87.65155°

SN 012-0006 &
SN 012-0007

STATION EQUATION
209+05.75 BK
209+05.58 AH

GROSS LENGTH = 3045 FT. = 0.577 MILES
NET LENGTH = 2662 FT. = 0.504 MILES

100′ 200′ 300′ — 1″ = 100′
0 10′ 20′ 30′ — 1″ = 10′
0 50′ 100′ — 1″ = 50′
0 50′ 100′ — 1″ = 40′
0 50′ 100′ — 1″ = 30′
0 50′ 100′ — 1″ = 20′

FULL SIZE PLANS HAVE BEEN PREPARED USING STANDARD ENGINEERING SCALES. REDUCED SIZED PLANS WILL NOT CONFORM TO STANDARD SCALES. IN MAKING MEASUREMENTS ON REDUCED PLANS, THE ABOVE SCALES MAY BE USED.

J.U.L.I.E.
JOINT UTILITY LOCATION INFORMATION FOR EXCAVATORS
1–800–892–0123
OR 811

PROJECT ENGINEER BRIAN LEWIS
PROJECT MANAGER

CONTRACT NO. 74A01

BRADLEY G. HUMMERT 50918 REGISTERED PROFESSIONAL ENGINEER OF ILLINOIS

Bradley G. Hummert 1/27/25
BRADLEY G. HUMMERT, P.E., S.E.
ILLINOIS REGISTERED ENGINEER NO. 062–050918
REGISTRATION EXPIRES NOV. 30, 2025

HMG ENGINEERS
IL PROF DESIGN FIRM NO. 184.000899

STATE OF ILLINOIS
DEPARTMENT OF TRANSPORTATION

SUBMITTED January 30 20 25
Lora Rensing
REGIONAL ENGINEER

March 21 20 25
ENGINEER OF DESIGN AND ENVIRONMENT

March 21 20 25
DIRECTOR OF HIGHWAYS PROJECT IMPLEMENTATION

PRINTED BY THE AUTHORITY OF THE STATE OF ILLINOIS

REV - MS

INDEX OF SHEETS

HIGHWAY STANDARDS

000001-08	STANDARD SYMBOLS, ABBREVIATIONS AND PATTERNS
001001-02	AREAS OF REINFORCEMENT BARS
001006	DECIMAL OF AN INCH AND OF A FOOT
280001-07	TEMPORARY EROSION CONTROL SYSTEMS
420001-10	PAVEMENT JOINTS
420401-13	PAVEMENT CONNECTOR)PCC) FOR BRIDGE APPROACH SLAB
421001-03	BAR REINFORCEMENT FOR CRC PAVEMENT
483001-06	PCC SHOULDER
515001-04	NAME PLATES FOR BRIDGES
542011-02	CONCRETE END SECTIONS FOR ELLIPTICAL PIPE CULVERTS 15"-72" DIA
602301-04	INLET TYPE A
602411-09	PRECAST MANHOLE TYPE A 7' DIAMETER
604001-05	FRAME AND LIDS TYPE 1
604036-03	GRATE TYPE 8
631031-18	TRAFFIC BARRIER TERMINAL TYPE 6
642001-03	SHOULDER RUMBLE STRIPS 16"
701400-12	APPROACH TO LANE CLOSURE FREEWAY EXPRESSWAY
701401-13	LANE CLOSURE FREEWAY EXPRESSWAY
701402-12	LANE CLOSURE FREEWAY EXPRESSWAY WITH BARRIER
701406-13	LANE CLOSURE FREEWAY EXPRESSWAY DAY OPERATIONS ONLY
701416-11	LANE CLOSURE FREEWAY EXPRESSWAY WITH CROSSOVER AND BARRIER
701428-01	TRAFFIC CONTROL SETUP REMOVAL FREEWAY EXPRESSWAY
701901-10	TRAFFIC CONTROL DEVICES
704001-08	TEMPORARY CONCRETE BARRIER
780001-05	TYPICAL PAVEMENT MARKINGS
781001-04	TYPICAL APPLICATIONS RAISED REFLECTIVE PAVEMENT MARKERS
782006-01	GUARDRAIL AND BARRIER WALL REFLECTOR MOUNTING DETAILS
701101-05	OFF-ROAD OPERATIONS, MULTILANE, 15' TO 24" FROM PAVEMENT EDGE
701106-02	OFF-ROAD OPERATIONS, MULTILANE, MORE THAN 15' AWAY

COMMITMENTS

NO COMMITMENTS

GENERAL NOTES

1. UTILITIES KNOWN TO HAVE FACILITIES WITHIN THE PROJECT AREA:

2. THE RESIDENT ENGINEER SHALL VERIFY THE EXISTENCE OF HIGHWAY LIGHTING AND/OR INTELLIGENT TRANSPORTATION SYSTEMS (I.T.S.) UTILITIES WITHIN THE PROJECT LIMITS. IF HIGHWAY LIGHTING AND/OR I.T.S. EXISTS WITHIN THE PROJECT LIMITS, AND IF THESE ITEMS REQUIRE LOCATING, THE CONTRACTOR SHALL BE DIRECTED TO DO SO ACCORDING TO SECTION 803 OF THE STANDARD SPECIFICATIONS. THIS WORK SHALL BE PAID FOR ACCORDING TO ARTICLE 109.04 OF THE STANDARD SPECIFICATIONS.

3. TWO (2) CHANGEABLE MESSAGE SIGNS WILL BE REQUIRED FOR THIS PROJECT. THEY SHALL BE PLACED TWO (2) WEEKS PRIOR TO EACH STAGE AND FOR THE DURATION OF STAGE 1, STAGE 2 AND STAGE 3. THE CHANGEABLE MESSAGE SIGNS SHALL BE PLACED AT EACH END OF THE PROJECT ON I-70 AT THE DIRECTION OF THE ENGINEER.

4. THE CONTRACTOR SHALL PROVIDE POSITIVE AND ADEQUATE DRAINAGE AT ALL LOCATIONS AT ALL TIMES. THIS MAY INCLUDE, BUT IS NOT LIMITED TO, REPLACEMENT OR RECONSTRUCTION OF EXISTING DRAINAGE STRUCTURES THAT HAVE BEEN DAMAGED OR REMOVED, REGRADING, PLUGGING ABANDONED PIPES, OR OTHER ACTIVITIES REQUIRED BY THE ENGINEER.

5. ALL ELEVATIONS REFER TO THE NAVD 88 DATUM.

6. ONLY SHORT TERM PAVEMENT MARKING REMOVAL FROM THE FINAL SURFACE SHALL BE PAID FOR AS "SHORT TERM PAVEMENT MARKING REMOVAL."

9. FACTORS FOR ESTIMATING PLAN QUANTITIES ARE AS FOLLOWS AND SHALL NOT BE USED FOR THE BASIS OF FINAL QUANTITIES:

AGGREGATE (SURFACE, BASE, & BACKFILL)	2.05 TON/CU YD
RIP RAP	1.5 TON/CU YD
SEEDING, CLASS 2A	200 LB/ACRE
TEMPORARY EROSION CONTROL SEEDING	100 LB/ACRE
NITROGEN FERTILIZER NUTRIENT	90 LB/ACRE
PHOSPHORUS FERTILIZER NUTRIENT	90 LB/ACRE
POTASSIUM FERTILIZER NUTRIENT	90 LB/ACRE
MULCH	2 TON/ACRE

10. ALL REMOVED GUARDRAIL COMPONENTS ARE THE PROPERTY OF THE CONTRACTOR AND THE SALVAGE VALUE OF SAID COMPONENTS SHALL BE REFLECTED IN THE CONTRACTOR'S BID.

11. SAW CUTTING ON ALL EDGES FOR REMOVAL ITEMS SHALL BE INCLUDED IN THE COST OF THE REMOVAL ITEM AS INDICATED AND IN ACCORDANCE WITH SECTION 440 OF THE STANDARD SPECIFICAITONS.

12. PERMANENT SURVEY MARKERS, TYPE 1 SHALL BE CAST IN ONE WING WALL OF EACH STRUCTURE FOR A TOTAL OF TWO (2) NEW MARKERS. THE ENGINEER SHALL SPECIFY TO THE CONTRACTOR WHICH WINGWALLS THE MARKERS SHALL BE PLACED. THIS WORK WILL BE PAID FOR AT THE CONTRACT BID PRICE FOR PERMANENT SURVEY MARKERS, TYPE 1.

13. EXCAVATION AND REMOVAL OF THE INSIDE AGGREGATE WEDGE SHOULDERS REQUIRED FOR THE CONSTRUCTION OF THE MEDIAN CROSSOVERS IS INCLUDED IN THE QUANTITY CALCULATED FOR EARTH EXCAVATION.

REV - MS

CODE NO.	ITEM	UNIT	TOTAL QUANTITY (90% FED 10% STATE)	CONSTRUCTION CODE: CLARK COUNTY ROADWAY 0004 RURAL	CLARK COUNTY BRIDGE 0013 SN 012-0006	CLARK COUNTY BRIDGE 0013 SN 012-0007
20200100	EARTH EXCAVATION	CU YD	980	980		
20300100	CHANNEL EXCAVATION	CU YD	565		329	236
25000210	SEEDING, CLASS 2A	ACRE	0.5	0.5		
25000400	NITROGEN FERTILIZER NUTRIENT	POUND	31	31		
25000500	PHOSPHORUS FERTILIZER NUTRIENT	POUND	31	31		
25000600	POTASSIUM FERTILIZER NUTRIENT	POUND	31	31		
25000700	AGRICULTURAL GROUND LIMESTONE	TON	1	1		
25100115	MULCH, METHOD 2	ACRE	0.5	0.5		
28000305	TEMPORARY DITCH CHECKS	FOOT	32	32		
28000500	INLET AND PIPE PROTECTION	EACH	5	5		
28100105	STONE RIPRAP, CLASS A3	SQ YD	74		37	37
28100109	STONE RIPRAP, CLASS A5	SQ YD	2055		1026	1029
28100111	STONE RIPRAP, CLASS A6	SQ YD	2680		1570	1110
28200200	FILTER FABRIC	SQ YD	4735		2596	2139

CODE NO.	ITEM	UNIT	TOTAL QUANTITY (90% FED 10% STATE)	CONSTRUCTION CODE: CLARK COUNTY ROADWAY 0004 RURAL	CLARK COUNTY BRIDGE 0013 SN 012-0006	CLARK COUNTY BRIDGE 0013 SN 012-0007
35101500	AGGREGATE BASE COURSE, TYPE B	CU YD	4731	4731		
42000060	WELDED WIRE REINFORCEMENT	SQ YD	221	221		
42000080	PAVEMENT CONNECTOR (PCC) FOR BRIDGE APPROACH SLAB	SQ YD	374	374		
42000560	PORTLAND CEMENT CONCRETE PAVEMENT 13"	SQ YD	3622	3622		
44000100	PAVEMENT REMOVAL	SQ YD	374	374		
50101700	REMOVAL OF EXISTING SUPERSTRUCTURES NO. 1	EACH	1		1	
50101800	REMOVAL OF EXISTING SUPERSTRUCTURES NO. 2	EACH	1			1
50102400	CONCRETE REMOVAL	CU YD	16.3		8	8.3
50104650	SLOPE WALL REMOVAL	SQ YD	2161		1148	1013
50200100	STRUCTURE EXCAVATION	CU YD	540		268	272
50300225	CONCRETE STRUCTURES	CU YD	68.9		34.3	34.6
50300255	CONCRETE SUPERSTRUCTURE	CU YD	826.8		413.3	413.5
50300300	PROTECTIVE COAT	SQ YD	3126		1563	1563
50301350	CONCRETE SUPERSTRUCTURE (APPROACH SLAB)	CU YD	235.4		117.7	117.7

CODE NO.	ITEM	UNIT	TOTAL QUANTITY (90% FED 10% STATE)	CONSTRUCTION CODE: CLARK COUNTY ROADWAY 0004 RURAL	CLARK COUNTY BRIDGE 0013 SN 012-0006	CLARK COUNTY BRIDGE 0013 SN 012-0007
50500105	FURNISHING AND ERECTING STRUCTURAL STEEL	L SUM	1		0.5	0.5
50500505	STUD SHEAR CONNECTORS	EACH	13752		6876	6876
50800205	REINFORCEMENT BARS, EPOXY COATED	POUND	288620		144290	144330
51500100	NAME PLATES	EACH	2		1	1
52100010	ELASTOMERIC BEARING ASSEMBLY, TYPE I	EACH	36		18	18
52100510	ANCHOR BOLTS, 3/4"	EACH	72		36	36
52100530	ANCHOR BOLTS, 1 1/4"	EACH	48		24	24
542A5479	PIPE CULVERTS, CLASS A, TYPE 1 EQUIVALENT ROUND-SIZE 24"	FOOT	1470	1470		
54214509	PRECAST REINFORCED CONCRETE FLARED END SECTIONS, EQUIVALENT ROUND-SIZE 24"	EACH	4	4		
550A0070	STORM SEWERS, CLASS A, TYPE 1 15"	FOOT	56	56		
58600101	GRANULAR BACKFILL FOR STRUCTURES	CU YD	550		270	280
59100100	GEOCOMPOSITE WALL DRAIN	SQ YD	252		125	127
60146304	PIPE UNDERDRAINS FOR STRUCTURES 4"	FOOT	340		170	170
60224445	MANHOLES, TYPE A, 7'-DIAMETER, TYPE 1 FRAME, OPEN LID	EACH	2	2		

	CODE NO.	ITEM	UNIT	TOTAL QUANTITY (90% FED 10% STATE)	CONSTRUCTION CODE: CLARK COUNTY ROADWAY 0004 RURAL	CLARK COUNTY BRIDGE 0013 SN 012-0006	CLARK COUNTY BRIDGE 0013 SN 012-0007
	60236200	INLETS, TYPE A, TYPE 8 GRATE	EACH	4	4		
*	63000001	STEEL PLATE BEAM GUARDRAIL, TYPE A, 6 FOOT POSTS	FOOT	500	500		
*	63100085	TRAFFIC BARRIER TERMINAL, TYPE 6	EACH	8	2	4	2
*	63100167	TRAFFIC BARRIER TERMINAL, TYPE 1 (SPECIAL) TANGENT	EACH	2	2		
	63200310	GUARDRAIL REMOVAL	FOOT	150		75	75
	63800920	MODULAR GLARE SCREEN SYSTEM, TEMPORARY	FOOT	3525	3525		
	64200116	SHOULDER RUMBLE STRIPS, 16 INCH	FOOT	6971	6971		
	66700205	PERMANENT SURVEY MARKERS, TYPE I	EACH	2	2		
	67000400	ENGINEER'S FIELD OFFICE, TYPE A	CAL MO	30	6	12	12
	67100100	MOBILIZATION	L SUM	1	1		
	70100207	TRAFFIC CONTROL AND PROTECTION, STANDARD 701402	EACH	1	1		
	70100410	TRAFFIC CONTROL AND PROTECTION, STANDARD 701416	EACH	1	1		
	70100700	TRAFFIC CONTROL AND PROTECTION, STANDARD 701406	L SUM	1	1		
	70100800	TRAFFIC CONTROL AND PROTECTION, STANDARD 701401	L SUM	1	1		

* SPECIALTY ITEM

CODE NO.	ITEM	UNIT	TOTAL QUANTITY (90% FED 10% STATE)	CONSTRUCTION CODE: CLARK COUNTY ROADWAY 0004 RURAL	CLARK COUNTY BRIDGE 0013 SN 012-0006	CLARK COUNTY BRIDGE 0013 SN 012-0007
70103815	TRAFFIC CONTROL SURVEILLANCE	CAL DA	900	900		
70107025	CHANGEABLE MESSAGE SIGN	CAL DA	474	474		
70300100	SHORT TERM PAVEMENT MARKING	FOOT	13915	13915		
70300150	SHORT TERM PAVEMENT MARKING REMOVAL	SQ FT	6957	6957		
70300241	TEMPORARY PAVEMENT MARKING - LINE 6"- PAINT	FOOT	26910	26910		
70400100	TEMPORARY CONCRETE BARRIER	FOOT	3525	3525		
70400125	PINNING TEMPORARY CONCRETE BARRIER	EACH	1668	1668		
* 78004630	PREFORMED PLASTIC PAVEMENT MARKING, TYPE D - STANDARD - LINE 6"	FOOT	12368	12368		
* 78004645	PREFORMED PLASTIC PAVEMENT MARKING, TYPE D - STANDARD - LINE 9"	FOOT	1546	1546		
* 78011035	GROOVING FOR RECESSED PAVEMENT MARKING 7"	FOOT	12368	12368		
* 78011050	GROOVING FOR RECESSED PAVEMENT MARKING 10"	FOOT	1546	1546		
78300200	RAISED REFLECTIVE PAVEMENT MARKER REMOVAL	EACH	138	138		
78300202	PAVEMENT MARKING REMOVAL - WATER BLASTING	SQ FT	20412	20412		
X5030250	BRIDGE DECK GROOVING (LONGITUDINAL)	SQ YD	1570		785	785

* SPECIALTY ITEM

REV - MS

CODE NO.	ITEM	UNIT	TOTAL QUANTITY (90% FED 10% STATE)	CONSTRUCTION CODE: CLARK COUNTY ROADWAY 0004 RURAL	CLARK COUNTY BRIDGE 0013 SN 012-0006	CLARK COUNTY BRIDGE 0013 SN 012-0007
X5080530	BAR TERMINATOR	EACH	572		286	286
X6420002	FILLING EXISTING RUMBLE STRIP	FOOT	6300	6300		
Z0004552	APPROACH SLAB REMOVAL	SQ YD	555	555		
X7200203	DETOUR SIGNING	L SUM	1		0.5	0.5
Ø Z0076600	TRAINEES	HOUR	1000	1000		
X5230176	DRAINAGE SCUPPERS, DS-12	EACH	12		6	6
Ø Z0076604	TRAINEES TRAINING PROGRAM GRADUATE	HOUR	1000	1000		
Z0029090	DIAMOND GRINDING (BRIDGE SECTION)	SQ YD	2680		1340	1340

Ø 0042

REV - MS

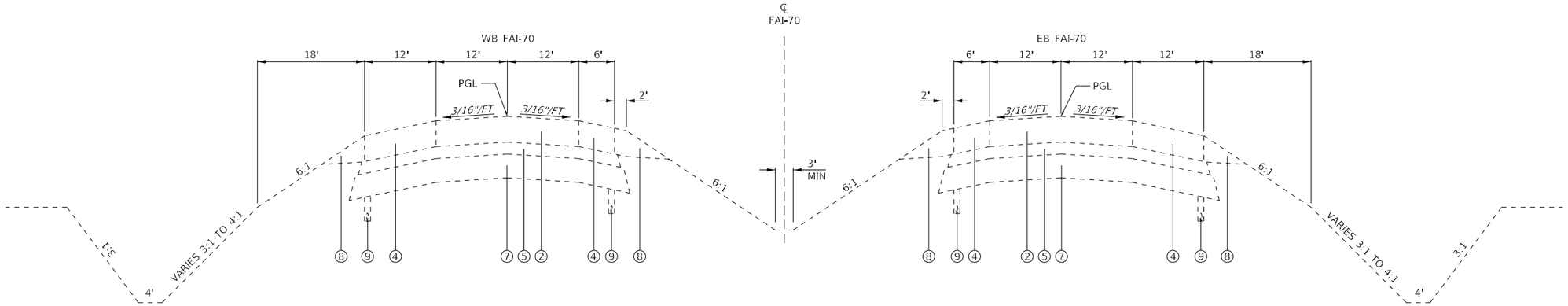

FAI–70 EXISTING TYPICAL SECTION

STA 196+00 - STA 214+12 LT
STA 196+00 - STA 214+37 RT
STA 217+07 - STA 218+61 LT
STA 217+33 - STA 218+87 RT

EXISTING LEGEND

1. CRC PCC PAVEMENT, 12"
2. CRC PCC PAVEMENT, 13"
3. PCC SHOULDERS, 12"
4. PCC SHOULDERS, 13"
5. HOT-MIX ASPHALT BINDER COURSE, 6"
6. HOT-MIX ASPHALT BASE COURSE, 8"
7. AGGREGATE SUBBASE, 12"
8. AGGREGATE SHOULDERS
9. PIPE UNDERDRAINS, 4"
10. HMA SHOULDER
11. BIT-AGG MIXTURE SUB-BASE
12. CRC PAVEMENT
13. HMA PAVEMENT

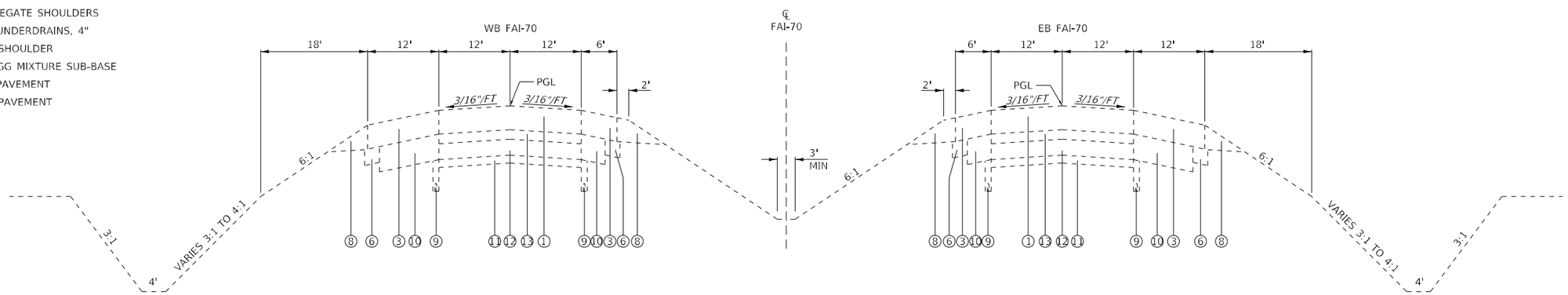

FAI–70 EXISTING TYPICAL SECTION

STA 218+61 - STA 246+12 LT
STA 218+87 - STA 246+12 RT

NOTE:
PAVEMENT STRUCTURES WERE DERIVED FROM CONTRACT 70044 PLANS.

MODEL: Default
FILE NAME: \\HMG\Jobs\8370_IDOT_I-70 over E Little Creek\8370_000_I-70 over E Little Creek Ph 1&2-HMG\CAD Sheets\0774A01-sh-Typical.dgn

HMG ENGINEERS IL PROF DESIGN FIRM 184.000899	USER NAME = tkruep	DESIGNED - M. O'BRIEN	REVISED -	STATE OF ILLINOIS DEPARTMENT OF TRANSPORTATION	EXISTING TYPICAL SECTIONS FAI–70	F.A.I. RTE.	SECTION	COUNTY	TOTAL SHEETS / SHEET NO.
		DRAWN - M. O'BRIEN	REVISED -			70	(12-53B-1)BR-1	CLARK	93 / 9
	PLOT SCALE = 100.0000 ' / in.	CHECKED -	REVISED -					CONTRACT NO. 74A01	
	PLOT DATE = 1/27/2025	DATE -	REVISED -		SCALE: N.T.S. / SHEET 1 OF 3 SHEETS / STA. / TO STA.		ILLINOIS	FED. AID PROJECT	

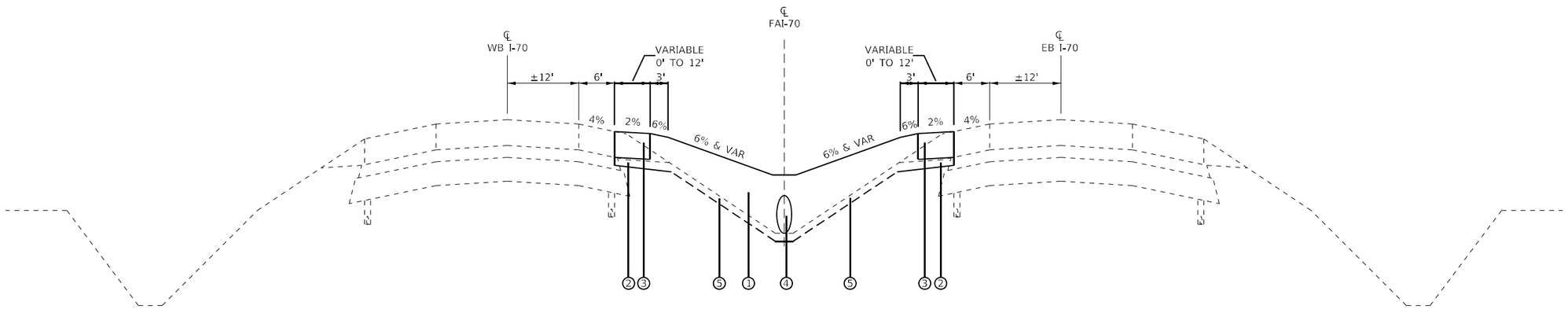

FAI–70 PROPOSED TYPICAL SECTION

STA 201+98.48 TO STA 204+4.68
STA 207+25.36 TO STA 209+41.34
STA 220+98.32 TO STA 223+14.86
STA 226+25.44 TO STA 228+41.69

PROPOSED LEGEND

1. AGGREGATE BASE COURSE, TYPE B
2. AGGREGATE BASE COURSE, TYPE B (4" MIN)
3. PORTLAND CEMENT CONCRETE PAVEMENT, 13"
4. PIPE CULVERT, CLASS A, TYPE 1 EQUIVALENT ROUND-SIZE 24"
5. EARTH EXCAVATION (TOPSOIL STRIPPING)

MODEL: Default
FILE NAME: \\HMG\Jobs\8370_IDOT7_I-70 over E Little Creek\8370_000_I-70 over E Little Creek PH 1&2-HMG\CAD Sheets\S77A01-sht-Typical.dgn

HMG ENGINEERS IL PROF DESIGN FIRM 184.000899	USER NAME = tkruep	DESIGNED - M. O'BRIEN	REVISED -	STATE OF ILLINOIS DEPARTMENT OF TRANSPORTATION	PROPOSED TYPICAL SECTIONS FAI–70	F.A.I. RTE.	SECTION	COUNTY	TOTAL SHEETS / SHEET NO.
		DRAWN - M. O'BRIEN	REVISED -			70	(12-53B-1)BR-1	CLARK	93 / 10
	PLOT SCALE = 100.0000 ' / in.	CHECKED -	REVISED -					CONTRACT NO. 74A01	
	PLOT DATE = 1/27/2025	DATE -	REVISED -		SCALE: N.T.S. / SHEET 2 OF 3 SHEETS / STA. TO STA.		ILLINOIS	FED. AID PROJECT	

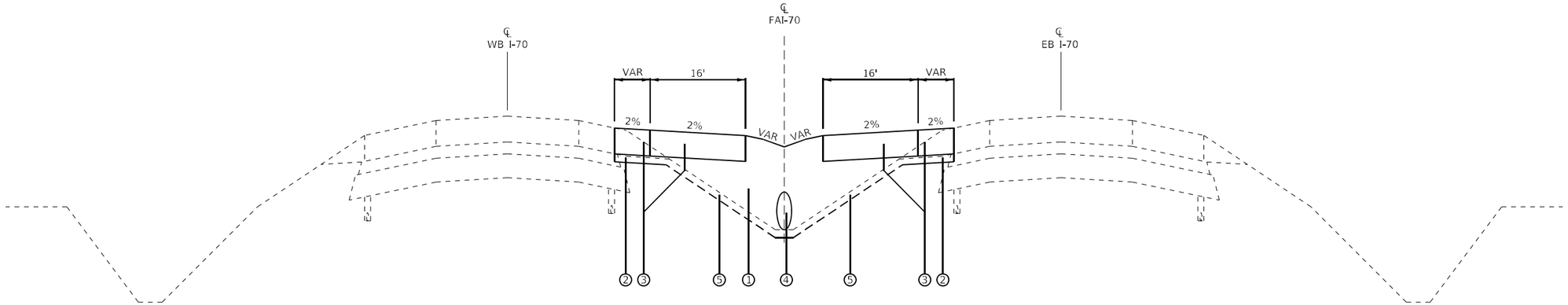

FAI–70 PROPOSED TYPICAL SECTION

STA 204+14.68 TO STA 205+00.00
STA 206+40.00 TO STA 207+25.36
STA 223+14.86 TO STA 224+00.18
STA 225+40.18 TO STA 226+25.54

PROPOSED LEGEND

1. AGGREGATE BASE COURSE, TYPE B
2. AGGREGATE BASE COURSE, TYPE B (4" MIN)
3. PORTLAND CEMENT CONCRETE PAVEMENT, 13"
4. PIPE CULVERT, CLASS A, TYPE 1 EQUIVALENT ROUND-SIZE 24"
5. EARTH EXCAVATION (TOPSOIL STRIPPING)

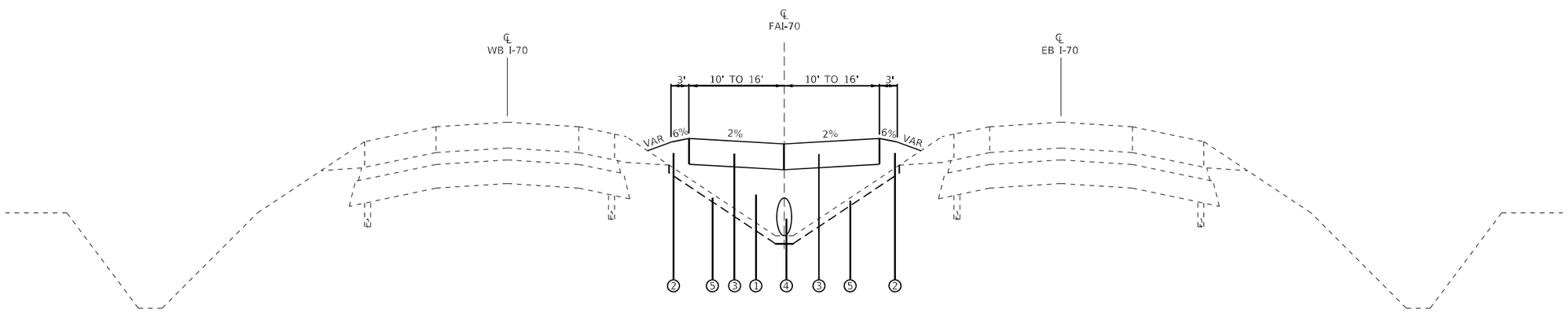

FAI–70 PROPOSED TYPICAL SECTION

STA 205+00.00 TO STA 206+40.00
STA 224+00.18 TO STA 225+40.18

MODEL: Default
FILE NAME: \\HMG\data\8370_IDOT_I-70 over E Little Creek\8370_000_I-70 over E Little Creek PH 1&2-HMG\CAD_Sheets\0774A01-sht-Typical.dgn

HMG ENGINEERS IL PROF DESIGN FIRM 184.000899	USER NAME = tkruep	DESIGNED - M. O'BRIEN	REVISED -	STATE OF ILLINOIS DEPARTMENT OF TRANSPORTATION	PROPOSED TYPICAL SECTIONS FAI–70
		DRAWN - M. O'BRIEN	REVISED -		
	PLOT SCALE = 100.0000 ' / in.	CHECKED -	REVISED -		
	PLOT DATE = 1/27/2025	DATE -	REVISED -		SCALE: N.T.S. SHEET 3 OF 3 SHEETS STA. TO STA.

F.A.I. RTE.	SECTION	COUNTY	TOTAL SHEETS	SHEET NO.
70	(12-53B-1)BR-1	CLARK	93	11
		CONTRACT NO. 74A01		
	ILLINOIS	FED. AID PROJECT		

CROSSOVER SCHEDULE

	EARTH EXCAVATION	AGGREGATE BASE COURSE, TYPE B	PORTLAND CEMENT CONCRETE PAVEMENT 13"	PROTECTIVE COAT	PIPE CULVERTS, CLASS A, TYPE 1 EQUIV RS 24"	PRECAST REINFORCED CONCRETE FLARED ENDSECTIONS, EQ RS 24"	STORM SEWERS, CLASS A, TYPE 1 15"	MANHOLES, TYPE A, 7' DIA, TYPE 1 FRAME, OPEN LID	INLETS, TYPE A, TYPE 8 GRATE
	CU YD	CU YD	SQ YD	SQ YD	FOOT	EACH	FOOT	EACH	EACH
I-70									
STAGE 1 - WEST CROSSOVER									
STA 199+95.00 TO STA 211+44.83						1.0			
STA 201+81.67									
STA 202+00.00 TO STA 205+67.50					367.5				
STA 201+98.48 TO STA 209+41.34	538.8	2,280.7	1,817.1	1,817.1					
STA 205+70.00							28.0	1.0	2.0
STA 205+73.84 TO STA 209+41.34					367.5				
STA 209+23.01						1.0			
STAGE 1 - EAST CROSSOVER									
STA 209+41.34 TO STA 230+45.18									
STA 220+81.67						1.0			
STA 220+98.32 TO STA 228+41.69	539.2	2,343.8	1,804.5	1,804.5					
STA 221+00.00 TO STA 224+67.50					367.5				
STA 224+70.18							28.0	1.0	2.0
STA 224+72.50 TO STA 228+40.00					367.5				
STA 228+21.67						1.0			
STAGE 2 - I-70 EAST BOUND									
STA 214+17.59 TO STA 214+37.60		26.4							
STA 217+31.89 TO STA 217+52.92		26.4							
STAGE 3 - I-70 WEST BOUND									
STA 213+91.32 TO STA 214+12.35		26.4							
STA 217+06.17 TO STA 217+26.66		26.5							
SUB-TOTAL	1,078.0	4,730.2	3,621.6	3,621.6	1,470.0	4.0	56.0	2.0	4.0
TOTALS	1,080	4,731	3,622	3,622	1,470	4	56	2	4

NOTES:

MODEL: Default
FILE NAME: \\HMG\Jobs\8370 IDOT7 I-70 over E Little Creek\8370 000 I-70 over E Little Creek PH 1&2-HMG\CAD Sheets\D774A01-sht-schedules.dgn

HMG
ENGINEERS
IL PROF DESIGN FIRM 184.000899

USER NAME = tkruep	DESIGNED - M. O'BRIEN	REVISED -	
	DRAWN - M. O'BRIEN	REVISED -	
PLOT SCALE = 100.0000 ' / in.	CHECKED -	REVISED -	
PLOT DATE = 1/27/2025	DATE -	REVISED -	

STATE OF ILLINOIS
DEPARTMENT OF TRANSPORTATION

SCHEDULE OF QUANTITIES

SCALE: N.T.S. | SHEET 1 OF 5 SHEETS | STA. TO STA.

F.A.I. RTE.	SECTION	COUNTY	TOTAL SHEETS	SHEET NO.
70	(12-53B-1)BR-1	CLARK	93	12

CONTRACT NO. 74A01

ILLINOIS | FED. AID PROJECT

ROADWAY PAVEMENT SCHEDULE

	AGGREGATE BASE COURSE, TYPE B	WELDED WIRE REINFORCEMENT	PAVEMENT REMOVAL	APPROACH SLAB REMOVAL	PAVEMENT CONNECTOR (PCC) FOR BRIDGE APPROACH SLAB	SHOULDER RUMBLE STRIPS, 16 INCH	TRAFFIC BARRIER TERMINAL, TYPE 6	GUARDRAIL REMOVAL
	CU YD	SQ YD	SQ YD	SQ YD	SQ YD	FOOT	EACH	FOOT
I-70								
STAGE 2								
STA 214+17.59 TO STA 214+37.60	26.4	53.4	93.4		93.4		2	75.0
STA 214+32.40 TO STA 214+74.22				142.0				
STA 216+97.50 TO STA 217+39.00				139.1				
STA 217+31.89 TO STA 217+52.92	26.4	56.1	93.3		93.3			
STAGE 3								
STA 199+00 TO STA 230+50 (INSIDE)						6,300.0		
STA 213+91.30 TO STA 217+26.70 (OUTSIDE)						335.3		
STA 213+91.32 TO STA 214+12.35	26.4	56.1	93.4		93.4		2	75.0
STA 214+06.00 TO STA 214+47.00				137.2				
STA 214+17.60 TO STA 217+52.90 (OUTSIDE)						335.3		
STA 216+71.00 TO STA 217+12.00				136.1				
STA 217+06.17 TO STA 217+26.66	26.5	54.6	93.6		93.6		2	
SUB-TOTAL	105.7	220.2	373.7	554.4	373.7	6,970.6	6.0	150.0
TOTALS	106	221	374	555	374	6,971	6	150

NOTES:

STEEL PLATE BEAM GUARDRAIL SCHEDULE

LOCATION	OFFSET	STEEL PLATE BEAM GUARDRAIL, TYPE A, 6 FOOT POSTS	TRAFFIC BARRIER TERMINAL, TYPE 6	TRAFFIC BARRIER TERMINAL, TYPE 1 (SPECIAL) TANGENT
		FOOT	EACH	EACH
STAGE 2				
STA 210+97 TO STA 213+47	LT INSIDE	250	1	1
STAGE 3				
STA 216+97 TO STA 219+47	RT INSIDE	250	1	1
COLOR SUB-TOTALS		500	2	2
TOTALS		500	2	2

NOTES:

MODEL: Default
FILE NAME: \\HMGJobs\8370_IDOT7 I-70 over E Little Creek\8370 000 I-70 over E Little Creek PH 1&2-HMG\CAD Sheets\D774A01-sht-schedules.dgn

HMG ENGINEERS
IL PROF DESIGN FIRM 184.000899

USER NAME = tkruep	DESIGNED - M. O'BRIEN	REVISED -
	DRAWN - M. O'BRIEN	REVISED -
PLOT SCALE = 100.0000 ' / in.	CHECKED -	REVISED -
PLOT DATE = 1/27/2025	DATE -	REVISED -

STATE OF ILLINOIS
DEPARTMENT OF TRANSPORTATION

SCHEDULE OF QUANTITIES

SCALE: N.T.S. | SHEET 2 OF 5 SHEETS | STA. TO STA.

F.A.I. RTE.	SECTION	COUNTY	TOTAL SHEETS	SHEET NO.
70	(12-53B-1)BR-1	CLARK	93	13
		CONTRACT NO. 74A01		
	ILLINOIS	FED. AID PROJECT		

TEMPORARY TRAFFIC CONTROL SCHEDULE OF QUANTITIES

LOCATION	SHORT TERM PAVEMENT MARKING			SHORT TERM PAVEMENT MARKING REMOVAL	TEMPORARY PAVEMENT MARKING - LINE 6" - PAINT			PAVEMENT MARKING REMOVAL - WATER BLASTING	TEMPORARY CONCRETE BARRIER	PINNING TEMPORARY CONCRETE BARRIER	MODULAR GLARE SCREEN SYSTEM, TEMPORARY	FILLING RUMBLE STRIP
	SOLID YELLOW	36'-4' SKIP DASH WHITE	SOLID WHITE		SOLID YELLOW	30'-10' SKIP DASH WHITE	SOLID WHITE					
	FOOT			SQ FT	FOOT			SQ FT	FOOT	EACH	FOOT	FOOT
FAI-70												
STA 199+00 TO STA 230+41								3,533.6				3150
STA 198+98 TO STA 230+41								3,423.4				3150
STAGE 1												
FAI-70												
EAST BOUND												
STA 196+80 TO STA 234+20					3,740.0	830.0	4,580.0	4,575.0				
WEST BOUND												
STA 196+80 TO STA 234+20					3,740.0	830.0	4,580.0	4,575.0				
STAGE 2												
FAI-70												
EAST BOUND												
STA 189+07 TO STA 230+48							4,166.1	2,083.1				
STA 199+07 TO STA 230+48					3,166.1			1,583.0				
WEST BOUND												
STA 203+77 TO STA 229+07							2,529.9	1,265.0				
STA 203+77 TO STA 239+07					3,530.0			1,765.0				
STA 206+59 TO STA 223+76									1,725	816	1,725	
STAGE 3												
FAI-70												
EAST BOUND												
STA 190+69 TO STA 228+39					3,769.8			1,884.9				
STA 199+00 TO STA 230+41	3,141.0	785.3	3,141.0	3,533.6								
STA 202+69 TO STA 228+39							2,629.9	1,315.0				
STA 206+73 TO STA 224+62									1,800	852	1,800	
WEST BOUND												
STA 199+98 TO STA 230+41	3,043.0	760.8	3,043.0	3,423.4								
STA 200+08 TO STA 230+51					3,050.3			1,525.2				
STA 200+08 TO STA 240+49							4,066.0	2,033.0				
COLOR SUB-TOTALS	6,184.0	1,546.1	6,184.0	6,957.0	20,996	1,660.0	22,552	29,561.2	3,525.0	1,668	3,525.0	6,300.0
TOTALS	13,915			6,957	45,209			29,562	3,525.0	1,668	3,525	6300

NOTES:

SHORT TERM PAVEMENT MARKINGS ARE ESTIMATED TO BE USED 1 TIME ON THE MAINLINE.

TEMPORARY PAVEMENT MARKINGS ARE ESTIMATED TO BE USED ONLY ONCE ON THE FINAL SURFACE.

MODEL: Default
FILE NAME: \\HMGJobs\8370 IDOT\ 170 over : Little Creek\8370 000 I-70 over E Little Creek PH 1&2-HMG\CAD Sheets\0774A01-sht-schedules.dgn

HMG
ENGINEERS
IL PROF DESIGN FIRM 184.000899

USER NAME = tkruep	DESIGNED - M. O'BRIEN	REVISED -
	DRAWN - M. O'BRIEN	REVISED -
PLOT SCALE = 100.0000 ' / in.	CHECKED -	REVISED -
PLOT DATE = 1/27/2025	DATE -	REVISED -

STATE OF ILLINOIS
DEPARTMENT OF TRANSPORTATION

SCHEDULE OF QUANTITIES

SCALE: N.T.S. | SHEET 3 OF 5 SHEETS | STA. TO STA.

F.A.I. RTE.	SECTION	COUNTY	TOTAL SHEETS	SHEET NO.
70	(12-53B-1)BR-1	CLARK	93	14
		CONTRACT NO. 74A01		
	ILLINOIS	FED. AID PROJECT		

EROSION CONTROL & SEEDING SCHEDULE

	CHANNEL EXCAVATION	SEEDING, CLASS 2A	NITROGEN FERTILIZER NUTRIENT	PHOSPHORUS FERTILIZER NUTRIENT	POTASSIUM FERTILIZER NUTRIENT	AGRI-CULTURAL GROUND LIMESTONE	MULCH, METHOD 2	TEMPORARY DITCH CHECKS	INLET AND PIPE PROTECTION
	CU YD	ACRE	POUND	POUND	POUND	TON	ACRE	FOOT	EACH
STAGE 1									
FAI-70 - WEST CROSS OVER									
STA 201+00.00 TO STA 201+94.00		0.11	9.7	9.7	9.7	0.2	0.11	16.0	
STA 201+94.00 CL									1
STA 209+47.34 TO STA 210+00.00		0.06	5.4	5.4	5.4	0.1	0.06		
STA 210+21.45 CL									1
STA 213+98.00 CL									1
FAI-70 - EAST CROSS OVER									
STA 218+25.58 CL									1
STA 220+00.00 TO STA 220+94.00		0.11	9.8	9.8	9.8	0.2	0.11	16.0	
STA 228+46.00 TO STA 229+00.00		0.06	5.5	5.5	5.5	0.1	0.06		
STA 228+46.00 CL									1
STAGE 2									
SN 012-0007	236.0								
STAGE 3									
SN 012-0006	329.00								
SUB-TOTAL	565.0	0.34	30.4	30.4	30.4	0.7	0.3	32.0	
TOTALS	565	0.50	31	31	31	1	0.50	32	5

NOTES:

CHANNEL EXCAVATION IS THE RESULT OF PLACEMENT OF RIPRAP SLOPE PROTECTION SHOWN ON BRIDGE PLANS AT DEPTHS AS SPECIFIED IN SECTION 281 OF THE STANDARD SPECIFICATIONS.

PAVEMENT MARKING SCHEDULE OF QUANTITIES

LOCATION	PREFORMED PLASTIC PAVEMENT MARKING, TYPE D - STANDARD - LINE 6"		PREFORMED PLASTIC PAVEMENT MARKING, TY D - STANDARD LINE 9 INCH	RAISED REFLECTIVE PAVEMENT MARKER REMOVAL	GROOVING FOR RECESSED PAVEMENT MARKING 7"	GROOVING FOR RECESSED PAVEMENT MARKING 10"
	SOLID YELLOW	SOLID WHITE	40'-10' SKIP DASH WHITE			
	FOOT		FOOT	EACH	FOOT	FOOT
I-70 EASTBOUND						
STA 199+00 TO STA 230+41	3,141.0	3,141.0	785.3	70	6,282.0	785.3
I-70 WESTBOUND						
STA 199+98 TO STA 230+41	3,043.0	3,043.0	760.8	68	6,086.0	760.8
COLOR SUB-TOTALS	6,184.0	6,184.0	1,546	138	12,368	1,546
TOTALS	12,368		1,546	138	12,368	1,546

NOTES:

RAISED REFLECTIVE PAVEMENT MARKER REMOVAL WAS ESTIMATED USING ALL PROPOSED QUANTITY FOR CRYSTAL AND HALF OF THE AMBER.

10' SKIP DASH SHALL CONSIST OF PREFORMED PLASTIC PAVEMENT MARKING, AND TYPE D -STANDARD LINE 9" OF A 6" LINE WITH BLACK 1-1/2" CONTRASTING CONTRASTING BORDERS.

BENCHMARKS

BENCHMARK	ELEVATION	STATION	OFFSET	DESCRIPTION
BM 512	582.210	242+65	86.5' LT	CHISELED SQUARE ON E. SIDE OF BOX CUVLERT WITH GRATE
BM 701	543.994	216+90	68.2' LT	BRASS DISC ON THE NE WINGWALL OF SN 012-0006; STAMPED ELEV IS 544.01
BM 702	546.039	214+81	68.2' RT	BRASS DISC ON THE SW WINGWALL OF SN 012-0007; STAMPED ELEV IS 546.05
BM 703	555.800	207+00	97.3' LT	CUT SQUARE ON SOUTH FOUNDATION OF REST AREA SIGN, SOUTH SIDE
BM 704	580.060	194+25	67.4' LT	CUT SQUARE ON TOP CENTER OF CRASH WALL OF WB I-70 NORTH SIDE OF OH STRUCT #45, APPROX 6.1' OFF E END

ELEVATIONS BASED ON NAVD88

Beginning chain I70 description
Feature: Geom_Ex_Centerline
==========

Point I701 N 1,004,025.315 E 1,173,908.900 Sta 170+33.37

Course from I701 to STAEQU1 S 89° 55' 42" E Dist 3,872.380

Equation: Sta 209+05.75 (BK) = Sta 209+05.58 (AH)
End Region 1

Begin Region 2

Point STAEQU1 N 1,004,020.468 E 1,177,781.277 Sta 209+05.58

Course from STAEQU1 to STAEQU2 S 89° 55' 42" E Dist 1,312.160

Equation: Sta 222+17.74 (BK) = Sta 222+18.09 (AH)
End Region 2

Begin Region 3

Point STAEQU2 N 1,004,018.825 E 1,179,093.436 Sta 222+18.09

Course from STAEQU2 to I702 S 89° 55' 42" E Dist 2,582.093

Point I702 N 1,004,015.593 E 1,181,675.527 Sta 248+00.18

==========
Ending chain I70 description

MODEL: Default
FILE NAME: \\HMG\Jobs\8370_IDOT_I-70 over E Little Creek\8370_000_I-70 over E Little Creek Pkl 1&2-HMG\CAD Sheets\0774A01-sh-ATB.dgn

HMG ENGINEERS IL PROF DESIGN FIRM 184.000899	USER NAME = tkruep	DESIGNED -	REVISED -	STATE OF ILLINOIS DEPARTMENT OF TRANSPORTATION
		DRAWN -	REVISED -	
	PLOT SCALE = 100.0000 ' / in.	CHECKED -	REVISED -	
	PLOT DATE = 1/27/2025	DATE -	REVISED -	

ALIGNMENTS, TIES, & BENCHMARKS

SCALE: SHEET 1 OF 4 SHEETS STA. TO STA.

F.A.I. RTE.	SECTION	COUNTY	TOTAL SHEETS	SHEET NO.
70	(12-53B-1)BR-1	CLARK	93	17
		CONTRACT NO. 74A01		
		ILLINOIS	FED. AID PROJECT	

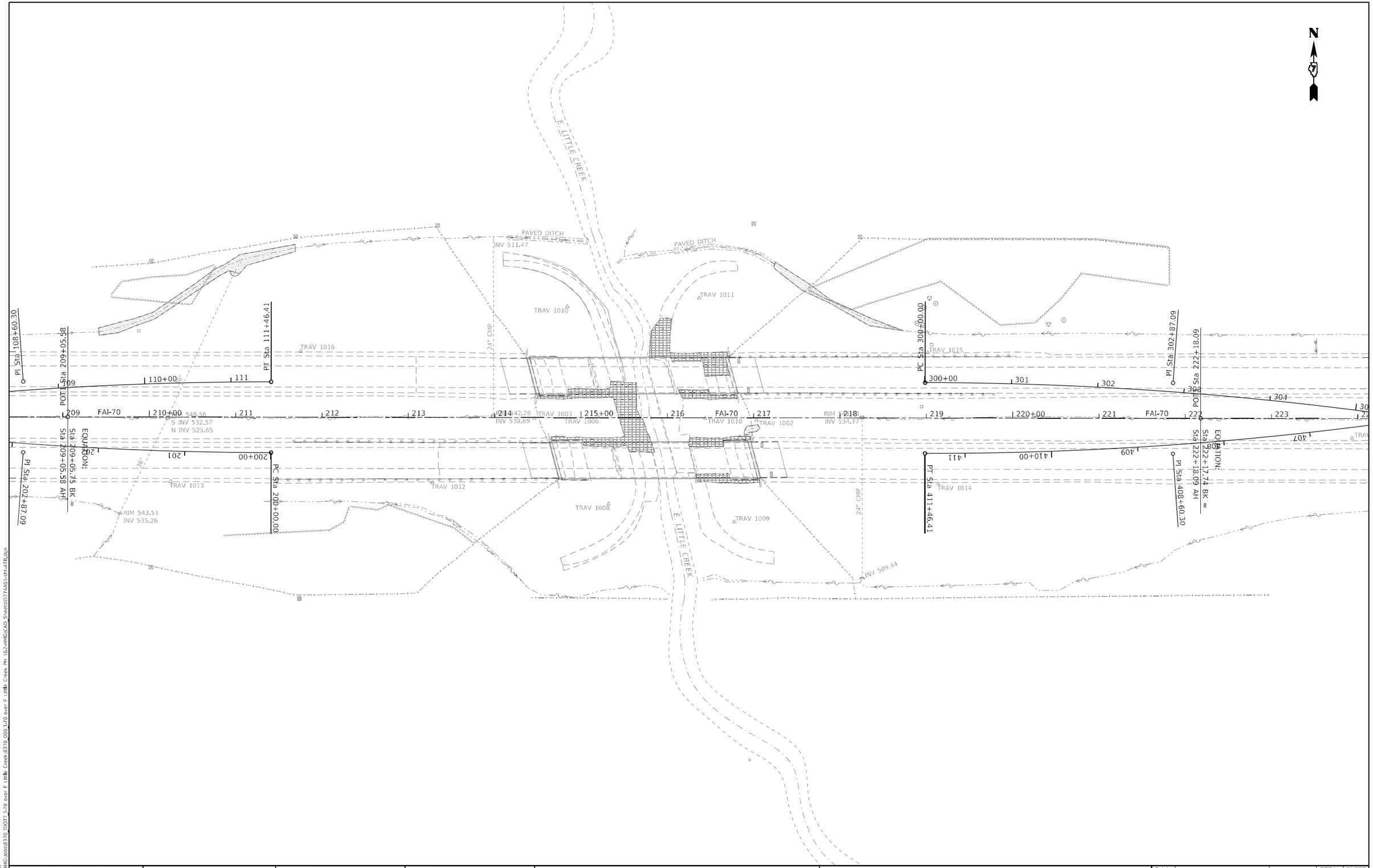

MODEL: Default
FILE NAME: \\HMG\Jobs\8370_IDOT7 I-70 over E Little Creek\8370-000 I-70 over E Little Creek Ph I 162-HMG\CAD Sheets\0774A01-sht-ATB.dgn

HMG ENGINEERS IL PROF DESIGN FIRM 184.000899	USER NAME = tkruep	DESIGNED -	REVISED -	**STATE OF ILLINOIS DEPARTMENT OF TRANSPORTATION**	**ALIGNMENTS, TIES, & BENCHMARKS**
		DRAWN -	REVISED -		
	PLOT SCALE = 100.0000 ' / in.	CHECKED -	REVISED -		
	PLOT DATE = 1/27/2025	DATE -	REVISED -		SCALE: SHEET 2 OF 4 SHEETS STA. TO STA.

F.A.I. RTE.	SECTION	COUNTY	TOTAL SHEETS	SHEET NO.
70	(12-53B-1)BR-1	CLARK	93	18
		CONTRACT NO. 74A01		
		ILLINOIS	FED. AID PROJECT	

Beginning chain WESTXOVER WB description
==========

Curve Data

Curve WESTXOVER WB1
P.I. Station 202+87.09 N 1,003,979.532 E 1,177,729.626
Delta = 8° 12' 38" (RT)
Degree = 1° 25' 57"
Tangent = 287.093
Length = 573.203
Radius = 4,000.000
External = 10.290
Long Chord = 572.713
Mid. Ord. = 10.263
P.C. Station 200+00.00 N 1,003,979.173 E 1,178,016.719
P.T. Station 205+73.20 N 1,004,020.888 E 1,177,445.527
C.C. N 1,007,979.170 E 1,178,021.726
Back = N 89° 55' 42" W
Ahead = N 81° 43' 04" W
Chord Bear = N 85° 49' 23" W

Curve Data

Curve WESTXOVER WB2
P.I. Station 208+60.30 N 1,004,062.244 E 1,177,161.428
Delta = 8° 12' 38" (LT)
Degree = 1° 25' 57"
Tangent = 287.093
Length = 573.203
Radius = 4,000.000
External = 10.290
Long Chord = 572.713
Mid. Ord. = 10.263
P.C. Station 205+73.20 N 1,004,020.888 E 1,177,445.527
P.T. Station 211+46.41 N 1,004,062.603 E 1,176,874.336
C.C. N 1,000,062.606 E 1,176,869.329
Back = N 81° 43' 04" W
Ahead = N 89° 55' 42" W
Chord Bear = N 85° 49' 23" W

==========
Ending chain WESTXOVER WB description

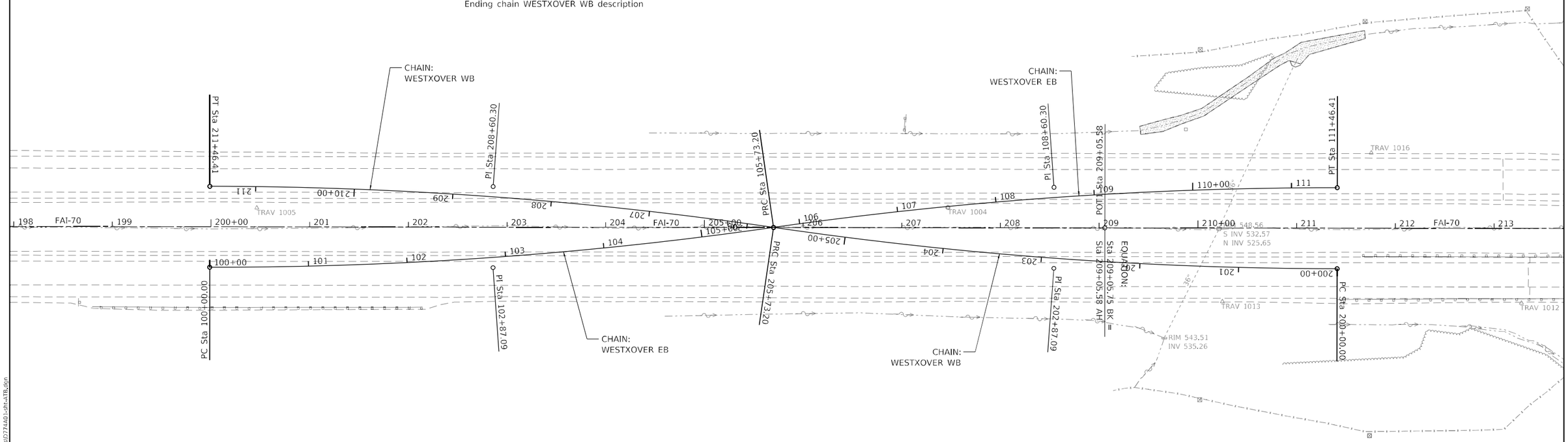

Beginning chain WESTXOVER EB description
==========

Curve Data

Curve WESTXOVER EB1
P.I. Station 102+87.09 N 1,003,980.244 E 1,177,161.326
Delta = 8° 12' 38" (LT)
Degree = 1° 25' 57"
Tangent = 287.093
Length = 573.203
Radius = 4,000.000
External = 10.290
Long Chord = 572.713
Mid. Ord. = 10.263
P.C. Station 100+00.00 N 1,003,980.603 E 1,176,874.233
P.T. Station 105+73.20 N 1,004,020.888 E 1,177,445.527
C.C. N 1,007,980.600 E 1,176,879.240
Back = S 89° 55' 42" E
Ahead = N 81° 51' 40" E
Chord Bear = N 85° 57' 59" E

Curve Data

Curve WESTXOVER EB2
P.I. Station 108+60.30 N 1,004,061.532 E 1,177,729.729
Delta = 8° 12' 38" (RT)
Degree = 1° 25' 57"
Tangent = 287.093
Length = 573.203
Radius = 4,000.000
External = 10.290
Long Chord = 572.713
Mid. Ord. = 10.263
P.C. Station 105+73.20 N 1,004,020.888 E 1,177,445.527
P.T. Station 111+46.41 N 1,004,061.173 E 1,178,016.821
C.C. N 1,000,061.176 E 1,178,011.814
Back = N 81° 51' 40" E
Ahead = S 89° 55' 42" E
Chord Bear = N 85° 57' 59" E

==========
Ending chain WESTXOVER EB description

MODEL: Default
FILE NAME: \\HMG\Jobs\6370 IDOT? I-70 over E Little Creek\8370-000 I-70 over E Little Creek PH 1 62-HMG\CAD_Sheets\D774A01-sht-ATR.dgn

HMG ENGINEERS IL PROF DESIGN FIRM 184.000899	USER NAME = tkruep	DESIGNED -	REVISED -	STATE OF ILLINOIS DEPARTMENT OF TRANSPORTATION	ALIGNMENTS, TIES, & BENCHMARKS	F.A.I. RTE.	SECTION	COUNTY	TOTAL SHEETS	SHEET NO.
		DRAWN -	REVISED -			70	(12-53B-1)BR-1	CLARK	93	19
	PLOT SCALE = 100.0000 ' / in.	CHECKED -	REVISED -					CONTRACT NO. 74A01		
	PLOT DATE = 1/27/2025	DATE -	REVISED -		SCALE: SHEET 3 OF 4 SHEETS STA. TO STA.		ILLINOIS	FED. AID PROJECT		

Beginning chain EASTXOVER WB description

==========

Curve Data

Curve EASTXOVER WB1

P.I. Station	402+87.09 N	1,004,059.154 E	1,179,629.727
Delta =	8° 12' 38" (LT)		
Degree =	1° 25' 57"		
Tangent =	287.093		
Length =	573.203		
Radius =	4,000.000		
External =	10.290		
Long Chord =	572.713		
Mid. Ord. =	10.263		
P.C. Station	400+00.00 N	1,004,058.795 E	1,179,916.820
P.T. Station	405+73.20 N	1,004,018.510 E	1,179,345.526
C.C.	N	1,000,058.798 E	1,179,911.813

Back = N 89° 55' 42" W

Ahead = S 81° 51' 40" W

Chord Bear = S 85° 57' 59" W

Curve Data

Curve EASTXOVER WB2

P.I. Station	408+60.30 N	1,003,977.865 E	1,179,061.324
Delta =	8° 12' 38" (RT)		
Degree =	1° 25' 57"		
Tangent =	287.093		
Length =	573.203		
Radius =	4,000.000		
External =	10.290		
Long Chord =	572.713		
Mid. Ord. =	10.263		
P.C. Station	405+73.20 N	1,004,018.510 E	1,179,345.526
P.T. Station	411+46.41 N	1,003,978.225 E	1,178,774.231
C.C.	N	1,007,978.222 E	1,178,779.239

Back = S 81° 51' 40" W

Ahead = N 89° 55' 42" W

Chord Bear = S 85° 57' 59" W

==========

Ending chain EASTXOVER WB description

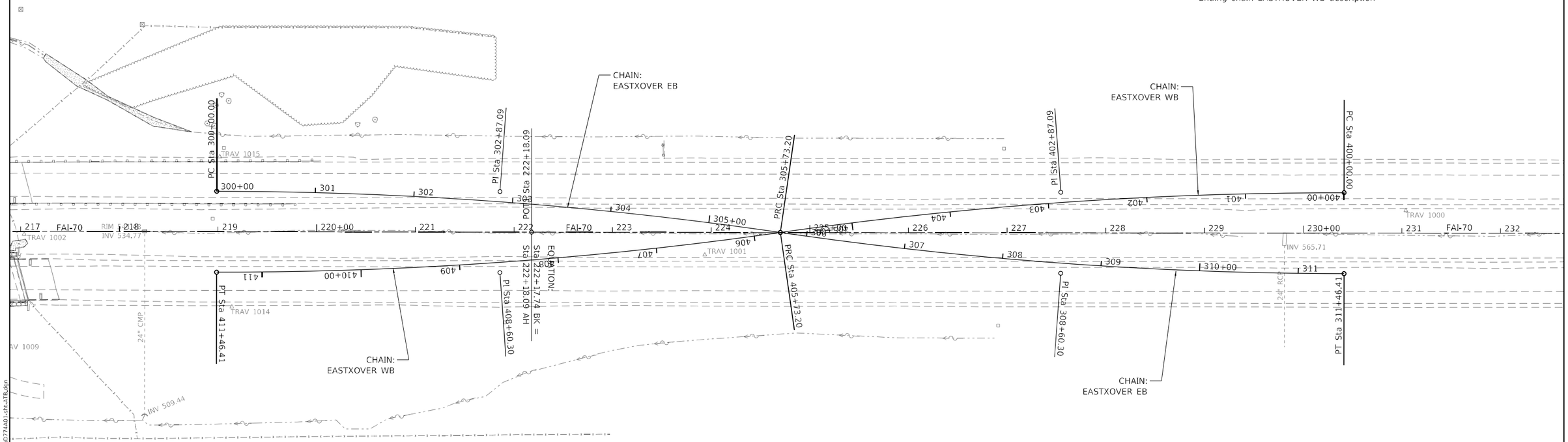

Beginning chain EASTXOVER EB description

==========

Curve Data

Curve EASTXOVER EB1

P.I. Station	302+87.09 N	1,004,059.865 E	1,179,061.427
Delta =	8° 12' 38" (RT)		
Degree =	1° 25' 57"		
Tangent =	287.093		
Length =	573.203		
Radius =	4,000.000		
External =	10.290		
Long Chord =	572.713		
Mid. Ord. =	10.263		
P.C. Station	300+00.00 N	1,004,060.225 E	1,178,774.334
P.T. Station	305+73.20 N	1,004,018.510 E	1,179,345.526
C.C.	N	1,000,060.228 E	1,178,769.327

Back = S 89° 55' 42" E

Ahead = S 81° 43' 04" E

Chord Bear = S 85° 49' 23" E

Curve Data

Curve EASTXOVER EB2

P.I. Station	308+60.30 N	1,003,977.154 E	1,179,629.625
Delta =	8° 12' 38" (LT)		
Degree =	1° 25' 57"		
Tangent =	287.093		
Length =	573.203		
Radius =	4,000.000		
External =	10.290		
Long Chord =	572.713		
Mid. Ord. =	10.263		
P.C. Station	305+73.20 N	1,004,018.510 E	1,179,345.526
P.T. Station	311+46.41 N	1,003,976.795 E	1,179,916.717
C.C.	N	1,007,976.791 E	1,179,921.724

Back = S 81° 43' 04" E

Ahead = S 89° 55' 42" E

Chord Bear = S 85° 49' 23" E

==========

Ending chain EASTXOVER EB description

MODEL: Default

FILE NAME: \\HMG\Jobs\8370 IDOT I-70 over E Little Creek\8370 000 I-70 over E Little Creek PH 1&2-HMG\CAD Sheets\0774A01-Ith-ATB.dgn

HMG ENGINEERS IL PROF DESIGN FIRM 184.000899	USER NAME = tkruep	DESIGNED -	REVISED -
		DRAWN -	REVISED -
	PLOT SCALE = 100.0000 ' / in.	CHECKED -	REVISED -
	PLOT DATE = 1/27/2025	DATE -	REVISED -

STATE OF ILLINOIS
DEPARTMENT OF TRANSPORTATION

ALIGNMENTS, TIES, & BENCHMARKS

SCALE: | SHEET 4 OF 4 SHEETS | STA. | TO STA.

F.A.I. RTE.	SECTION	COUNTY	TOTAL SHEETS	SHEET NO.
70	(12-53B-1)BR-1	CLARK	93	20

CONTRACT NO. 74A01

ILLINOIS | FED. AID PROJECT

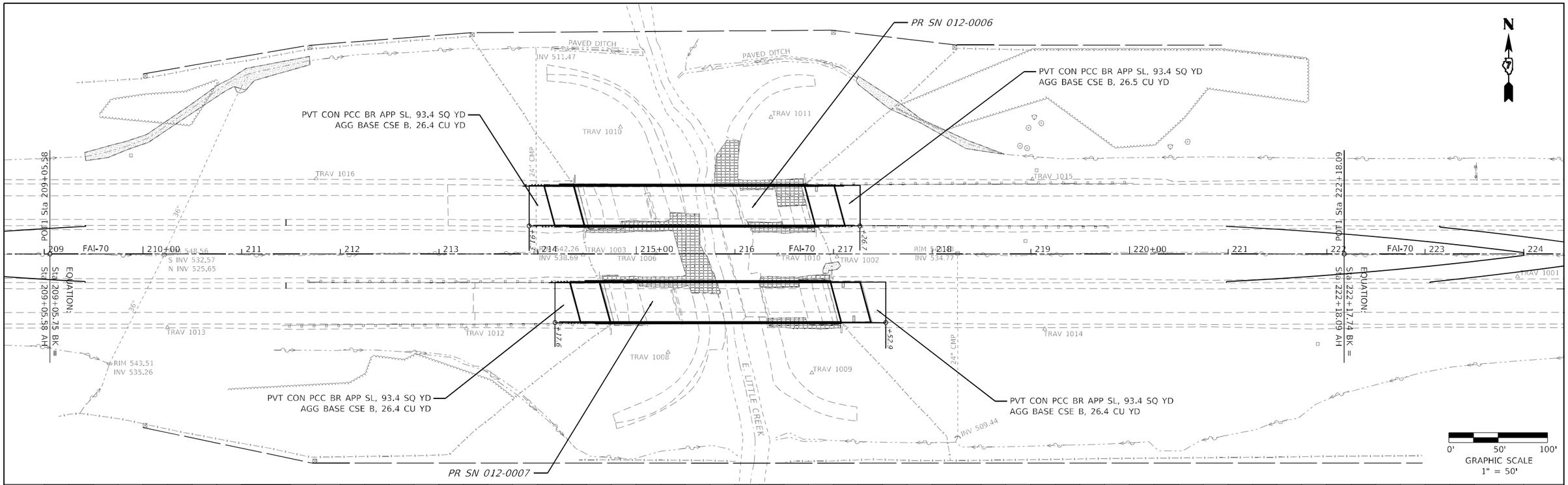

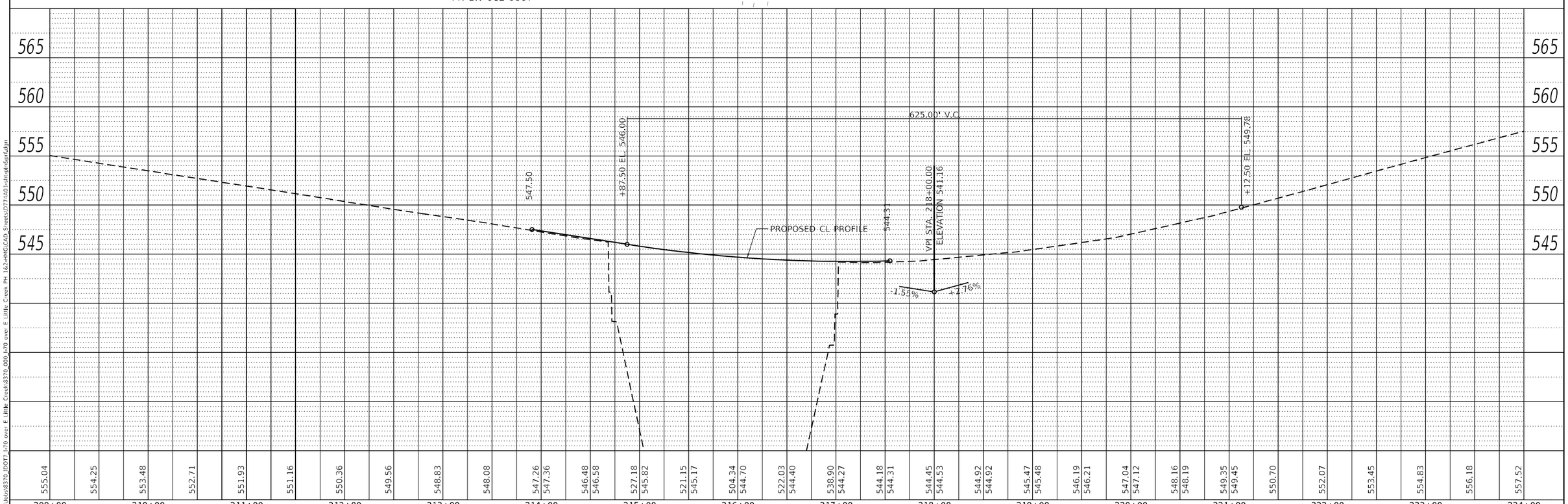

PLAN
SURVEYED
PLOTTED
ALIGNMENT CHECKED
R/W CHECKED
CADD FILE NAME
NOTE BOOK NO.
BY
DATE

PROFILE
SURVEYED
PLOTTED
GRADES CHECKED
B.M. NOTED
STRUCTURE NOTATIONS CHKD
NOTE BOOK NO.
BY
DATE

MODEL: Default
FILE NAME: \\HMG\Jobs\8370_IDOT7_I-70 over E Little Creek\8370_000_I-70 over E Little Creek PH 1&2-HMG\CAD_Sheets\D774A01-sht-pln&prf.dgn

HMG
ENGINEERS
IL PROF DESIGN FIRM 184.000899

USER NAME = tkruep	DESIGNED -	REVISED -
	DRAWN -	REVISED -
PLOT SCALE = 100.0000 ' / in.	CHECKED -	REVISED -
PLOT DATE = 1/27/2025	DATE -	REVISED -

STATE OF ILLINOIS
DEPARTMENT OF TRANSPORTATION

PLAN & PROFILE
I-70

SCALE: 1" = 50' | SHEET 1 OF 1 SHEETS | STA. 209+00.00 TO STA. 224+00.00

F.A.I. RTE.	SECTION	COUNTY	TOTAL SHEETS	SHEET NO.
70	(12-53B-1)BR-1	CLARK	93	21
		CONTRACT NO. 74A01		
		ILLINOIS	FED. AID PROJECT	

CLOSE CROSSOVER WHEN NOT IN USE WITH DRUMS
LOCATED ON 10' CENTERS AT ℄ OF I-70.
COST TO BE INCLUDED IN TRAFFIC CONTROLS ITEMS.

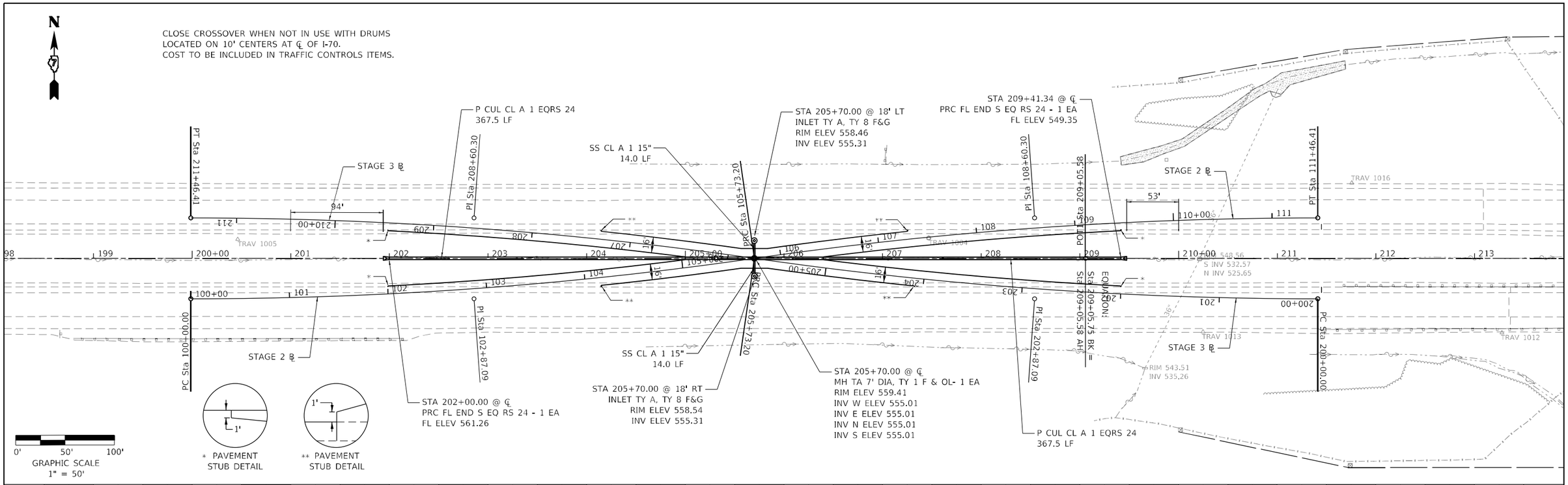

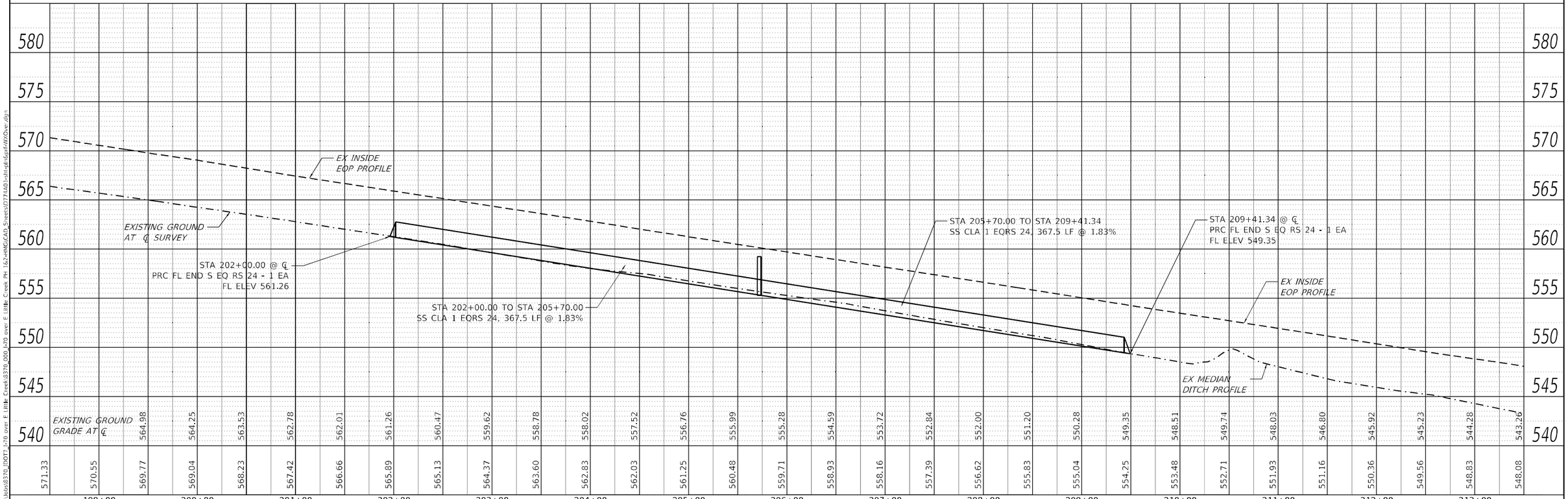

HMG ENGINEERS IL PROF DESIGN FIRM 184.000899	USER NAME = tkruep	DESIGNED -	REVISED -
		DRAWN -	REVISED -
	PLOT SCALE = 100.0000 ' / in.	CHECKED -	REVISED -
	PLOT DATE = 1/27/2025	DATE -	REVISED -

STATE OF ILLINOIS
DEPARTMENT OF TRANSPORTATION

PLAN AND PROFILE
WEST CROSSOVER

SCALE: 1" = 50' | SHEET 1 OF 2 SHEETS | STA. TO STA.

F.A.I. RTE.	SECTION	COUNTY	TOTAL SHEETS	SHEET NO.
70	(12-53B-1)BR-1	CLARK	93	22
		CONTRACT NO. 74A01		
		ILLINOIS FED. AID PROJECT		

PLAN
SURVEYED
PLOTTED
ALIGNMENT CHECKED
RT. OF WAY CHECKED
CADD FILE NAME
NOTE BOOK NO.
BY
DATE

PROFILE
SURVEYED
PLOTTED
GRADES CHECKED
B.M. NOTED
STRUCTURE NOTATIONS CHKD
NOTE BOOK NO.
BY
DATE

MODEL: Default
FILE NAME: \\HMG\Jobs\8370_IDOT7_I-70 over E Little Creek\8370_000_I-70 over E Little Creek PH 1&2-HMG\CAD_Sheets\D774A01-sht-pln&prf-MXOver.dgn

WEST CROSS OVER ELEVATION AND OFFSET DATA

C.L. STATION	STAGE 2 CENTERLINE	STAGE 3 CENTERLINE	E.O.P. LEFT OF C.L.		E.O.P. LEFT OF C.L.		BREAK POINT		E.O.P. RIGHT OF C.L.		E.O.P. RIGHT OF C.L.	
I-70	OFFSET (FT)	OFFSET (FT)	OFFSET (FT)	ELEV.	OFFSET (FT)	ELEV.	OFFSET (FT)	ELEV.	OFFSET (FT)	ELEV.	OFFSET (FT)	ELEV.
201+98.49	36.00	-36.00			-28.00	565.61			28.00	565.5		
202+00.00	35.93	-35.93			-27.92	565.59			27.92	565.47		
202+25.00	34.60	-34.60			-26.58	565.17			26.58	565.05		
202+50.00	33.10	-33.10			-25.09	564.74			25.09	564.63		
202+75.00	31.69	-31.69			-23.43	564.31			23.43	564.21		
203+00.00	29.64	-29.64			-21.62	563.88			21.62	563.78		
203+25.00	27.67	-27.67			-19.65	563.45			19.65	563.37		
203+50.00	25.55	-25.55			-17.52	563.02			17.52	562.95		
203+75.00	23.27	-23.27			-15.23	562.59			15.23	562.54		
204+00.00	20.82	-20.82			-12.78	562.16			12.78	562.11		
204+25.00	18.22	-18.22	-26.27	562.03	-10.18	561.71			10.18	561.66	26.27	561.98
204+50.00	15.47	-15.47	-23.52	561.58	-7.41	561.26			7.41	561.19	23.52	561.51
204+75.00	12.55	-12.55	-20.61	561.13	-4.49	560.81			4.49	560.73	20.61	561.05
205+00.00	9.47	-9.47	-17.53	560.69	-1.40	560.37	0.00	560.34	1.40	560.26	17.53	560.63
205+25.00	6.23	-6.23	-14.30	560.24			0.00	559.96			14.30	560.18
205+50.00	2.83	-2.83	-10.91	559.79			0.00	559.57			10.91	559.74
205+75.00	-0.72	0.72	-10.00	559.38			0.00	559.18			10.00	559.34
206+00.00	-4.21	4.21	-12.29	559.04			0.00	558.79			12.29	558.99
206+25.00	-7.55	7.55	-15.61	558.71			0.00	558.40			15.61	558.66
206+50.00	-10.72	10.72	-18.78	558.38	-2.67	558.06			2.67	557.98	18.78	558.33
206+75.00	-13.73	13.73	-21.79	558.06	-5.68	557.74			5.68	557.66	21.79	558.01
207+00.00	-16.59	16.59	-24.64	557.74	-8.54	557.42			8.54	557.34	24.64	557.69
207+25.00	-19.28	19.28	-27.33	557.42	-11.24	557.10			11.24	557.01	27.33	557.37
207+50.00	-21.82	21.82			-13.78	556.77			13.78	556.68		
207+75.00	-24.20	24.20			-16.16	556.43			16.16	556.34		
208+00.00	-26.42	26.42			-18.39	556.07			18.39	555.99		
208+25.00	-28.48	28.48			-20.45	555.71			20.45	555.64		
208+50.00	-32.13	32.13			-22.36	555.34			22.36	555.28		
208+75.00	-31.69	31.69			-24.11	554.99			24.11	554.93		
209+00.00	-33.72	33.72			-25.70	554.63			25.70	554.57		
209+25.00	-35.16	35.16			-27.15	554.28			27.15	554.21		
209+41.34	-36.00	36.00			-28.00	554.04			28.00	553.97		

CLOSE CROSSOVER WHEN NOT IN USE WITH DRUMS
LOCATED ON 10' CENTERS AT ℄ OF I-70.
COST TO BE INCLUDED IN TRAFFIC CONTROLS ITEMS.

N

STA 224+70.18 @ 18' LT
INLET TY A, TY 8 F&G
RIM ELEV 557.80
INV ELEV 554.61

SS CLA 1 15",
14.0 LF

P CUL CL A 1 EQRS 24,
367.5 LF

STA 228+40.00 @ ℄
PRC FL END S EQ RS 24 - 1 EA
FL ELEV 563.40

STAGE 2 ₽

STAGE 3 ₽

94'

54'

PC Sta 300+00.00

PI Sta 302+87.09

PC Sta 222+18.09

PC Sta 305+73.20

PI Sta 402+87.09

PC Sta 400+00.00

300+00 301 302 304 305+00 219 220+00 221 223 224 226 227 228 229 230+00 231 232 400+00 401 402 403 404 406 407 308 309 310+00 311

TRAV 1015

TRAV 1002

RIM 1218
INV 534.77

TRAV 1001

TRAV 1000

INV 565.71

24" RC

EQUATION:
Sta 222+17.74 BK =
Sta 222+18.09 AH

PT Sta 411+46.41

PI Sta 408+60.30

PRC Sta 405+73.20

PI Sta 308+60.30

PT Sta 311+46.41

TRAV 1014

24" CMP

INV 509.44

STAGE 3 ₽

SS CLA 1 15",
16.0 LF

STAGE 2 ₽

STA 221+00.00 @ ℄
PRC FL END S EQ RS 24 - 1 EA
FL ELEV 545.29

P CUL CL A 1 EQRS 24,
367.5 LF

STA 224+70.18 @ 20' RT
INLET TY A, TY 8 F&G
RIM ELEV 557.52
INV ELEV 554.61

STA 224+70.18 @ ℄
MH TA 7' DIA, TY 1 F & OL- 1 EA
RIM ELEV 557.80
INV W ELEV 554.32
INV E ELEV 554.32
INV N ELEV 554.32
INV S ELEV 554.32

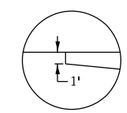

* PAVEMENT
STUB DETAIL

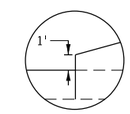

** PAVEMENT
STUB DETAIL

0' 50' 100'
GRAPHIC SCALE
1" = 50'

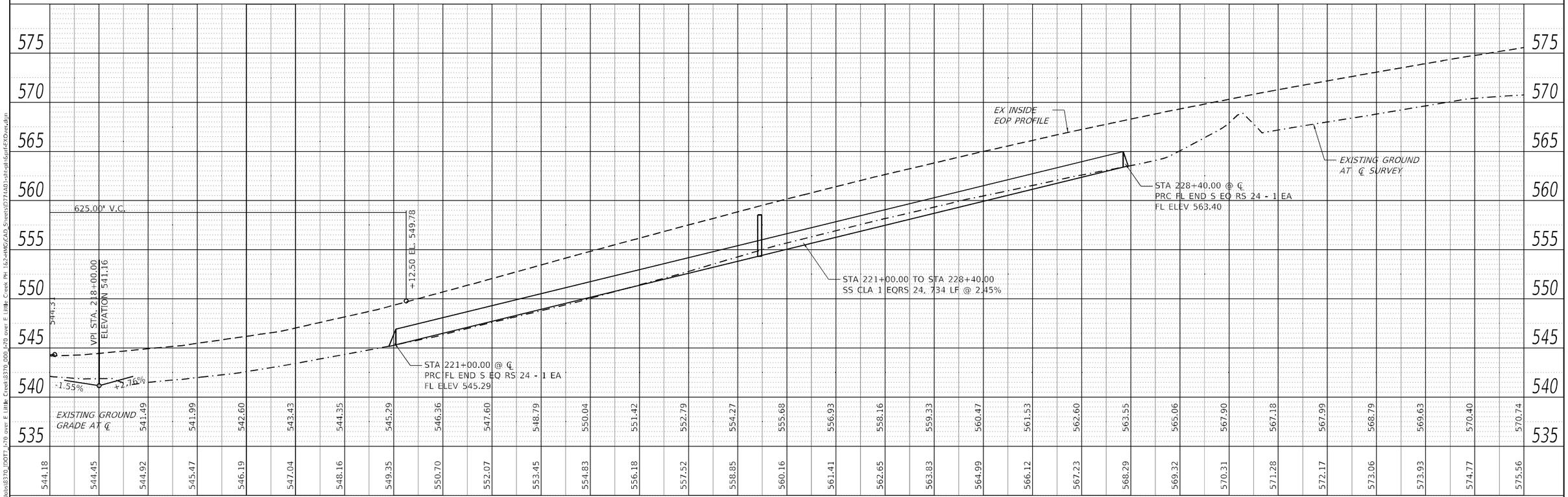

PLAN			BY	DATE
NOTE BOOK NO.	SURVEYED			
	PLOTTED			
	ALIGNMENT CHECKED			
	R/W CHECKED			
	CADD FILE NAME			

PROFILE			BY	DATE
NOTE BOOK NO.	SURVEYED			
	PLOTTED			
	ALIGNMENT CHECKED			
	R/W CHECKED			
	BR. NOTED			
	STRUCTURE NOTATIONS CHKD			

MODEL: Default
FILE NAME: \\HMG\Jobs\8370_IDOT7_I-70 over E Little Creek\8370_000_I-70 over E Little Creek PH 1&2-HMG\CAD_Sheets\D774A01-sht-pln&prf-EXOver.dgn

HMG
ENGINEERS
IL PROF DESIGN FIRM 184.000899

USER NAME = tkruep	DESIGNED - M.OBRIEN	REVISED -
	DRAWN - M.OBRIEN	REVISED -
PLOT SCALE = 100.0000 ' / in.	CHECKED -	REVISED -
PLOT DATE = 1/27/2025	DATE -	REVISED -

STATE OF ILLINOIS
DEPARTMENT OF TRANSPORTATION

PLAN AND PROFILE
EAST CROSSOVER

SCALE: 1" = 50' | SHEET 1 OF 2 SHEETS | STA. TO STA.

F.A.I. RTE.	SECTION	COUNTY	TOTAL SHEETS	SHEET NO.
70	(12-53B-1)BR-1	CLARK	93	24
		CONTRACT NO. 74A01		
		ILLINOIS	FED. AID PROJECT	

EAST CROSS OVER ELEVATION AND OFFSET DATA

C.L. STATION	STAGE 2 CENTERLINE	STAGE 3 CENTERLINE	E.O.P. LEFT OF C.L.		E.O.P. LEFT OF C.L.		BREAK POINT		E.O.P. RIGHT OF C.L.		E.O.P. RIGHT OF C.L.	
I-70	OFFSET (FT)	OFFSET (FT)	OFFSET (FT)	ELEV.	OFFSET (FT)	ELEV.	OFFSET (FT)	ELEV.	OFFSET (FT)	ELEV.	OFFSET (FT)	ELEV.
220+98.32	-36.00	36.00			-28.00	548.94			28.00	548.94		
221+00.00	-35.93	35.93			-27.92	548.98			27.92	548.98		
221+25.00	-34.59	34.59			-26.57	549.64			26.57	549.64		
221+50.00	-33.04	33.04			-25.08	550.29			25.08	550.29		
221+75.00	-31.44	31.44			-23.42	550.94			23.42	550.94		
222+00.00	-29.63	29.63			-21.60	551.58			21.60	551.58		
222+25.00	-27.69	27.69			-19.66	552.20			19.66	552.20		
222+50.00	25.56	25.56			17.53	552.83			17.53	552.83		
222+75.00	-23.28	23.28			-15.25	553.45			15.25	553.45		
223+00.00	-20.84	20.84			-12.80	554.08			12.80	554.08		
223+25.00	-18.24	18.24	-26.29	555.05	-10.20	554.72			10.20	554.72	26.29	555.05
223+50.00	-15.49	15.49	-23.54	555.68	-7.43	555.36			7.43	555.36	23.54	555.68
223+75.00	-12.57	12.57	-20.63	556.31	-4.51	555.99			4.51	555.99	20.63	556.31
224+00.00	-9.49	9.49	-17.56	556.93	-1.43	556.61	0.00	556.58	1.43	556.61	17.56	556.93
224+25.00	-6.26	6.26	-14.33	557.53			0.00	557.24			14.33	557.53
224+50.00	-2.86	2.86	-10.94	558.12			0.00	557.90			10.94	558.12
224+75.00	0.69	-0.69	-10.00	558.77			0.00	558.57			10.00	558.77
225+00.00	4.19	-4.19	-12.28	559.45			0.00	559.20			12.28	559.45
225+25.00	7.53	-7.53	-15.59	560.13			0.00	559.82			15.59	560.13
225+50.00	10.70	-10.70	-18.76	560.81	-2.64	560.49			2.64	560.49	18.76	560.81
225+75.00	13.71	-13.71	-21.77	561.49	-5.66	561.17			5.66	561.17	21.77	561.49
226+00.00	16.57	-16.57	-24.62	562.17	-8.56	561.84			8.56	561.84	24.62	562.17
226+25.00	19.26	-19.26	-27.31	562.84	-11.22	562.52			11.22	562.52	27.31	562.84
226+50.00	21.80	-21.80			-13.76	563.19			13.76	563.19		
226+75.00	24.18	-24.18			-16.15	563.85			16.15	563.85		
227+00.00	26.40	-26.40			-18.37	564.47			18.37	564.47		
227+25.00	28.46	-28.46			-20.44	565.07			20.44	565.07		
227+50.00	32.11	-32.11			-22.35	565.66			21.94	565.66		
227+75.00	31.67	-31.67			-24.10	566.24			24.10	566.24		
228+00.00	33.70	-33.70			-25.69	566.82			25.03	566.82		
228+25.00	35.14	-35.14			-27.13	567.38			27.13	567.38		
228+41.51	36.00	-36.00			-28.00	567.75			28.00	567.75		

MODEL: Default
FILE NAME: \\HMG\Jobs\8370_IDOT_I-70 over E Little Creek\8370_000_I-70 over E Little Creek Ph I&2-HMG\CAD Sheets\0774A01-sht-plnSurf-EXOver.dgn

HMG
ENGINEERS
IL PROF DESIGN FIRM 184.000899

USER NAME = tkruep	DESIGNED -	REVISED -
	DRAWN -	REVISED -
PLOT SCALE = 100.0000 ' / in.	CHECKED -	REVISED -
PLOT DATE = 1/27/2025	DATE -	REVISED -

STATE OF ILLINOIS
DEPARTMENT OF TRANSPORTATION

EAST CROSSOVER
OFFSET & ELEVATION DATA

SCALE: | SHEET 2 OF 2 SHEETS | STA. | TO STA.

F.A.I. RTE.	SECTION	COUNTY	TOTAL SHEETS	SHEET NO.
70	(12-53B-1)BR-1	CLARK	93	25
		CONTRACT NO. 74A01		
	ILLINOIS	FED. AID PROJECT		

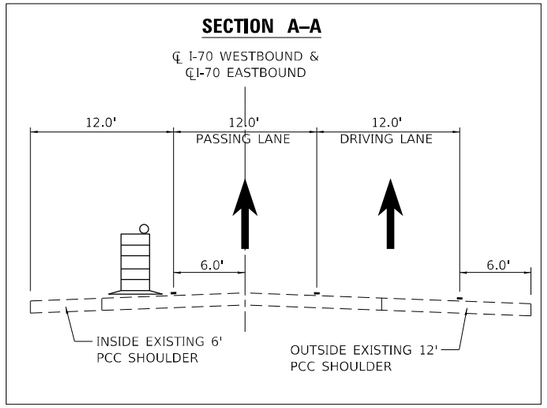

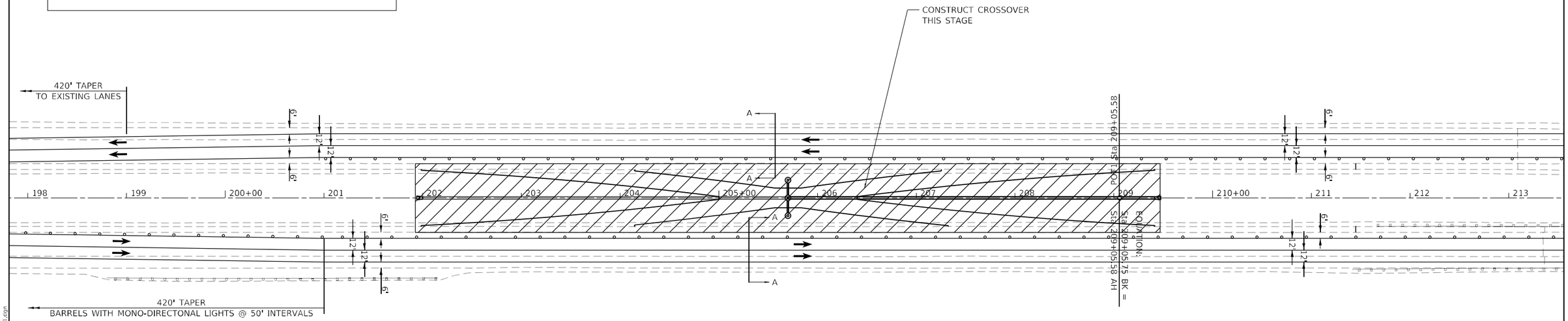

STAGE 1 SUGGESTED SEQUENCE OF OPERATIONS

1. CONSTRUCT EAST AND WEST CROSSOVERS UTILIZING HIGHWAY STANDARD 701400 & 701401 AND A 6 FOOT LANE SHIFT TO THE OUTSIDE SHOULDER.

2. FILL EXISTING INSIDE & OUTSIDE SHOULDER RUMBLE STRIPS USING LANE CLOSURES.

3. BEGIN CHANNEL EXCAVATION, SLOPE WORK AND ANY OTHER WORK UNDER STRUCTURES NOT REQUIRING LANE REDUCTIONS.

STAGE 1 WORK AREA

0' 50' 100'
GRAPHIC SCALE
1" = 50'

MODEL: Default
FILE NAME: \\HMG\Jobs\8370 IDOT I-70 over E Little Creek\8370_000 I-70 over E Little Creek PH 1 62-HMG\CAD_Sheets\0774A01-sht-plh-MOTStage1.dgn

HMG ENGINEERS IL PROF DESIGN FIRM 184.000899	USER NAME = tkruep	DESIGNED -	REVISED -	STATE OF ILLINOIS DEPARTMENT OF TRANSPORTATION	STAGE 1 MAINTENANCE OF TRAFFIC	F.A.I. RTE.	SECTION	COUNTY	TOTAL SHEETS	SHEET NO.
		DRAWN -	REVISED -			70	(12-53B-1)BR-1	CLARK	93	26
	PLOT SCALE = 100.0000 ' / in.	CHECKED -	REVISED -					CONTRACT NO. 74A01		
	PLOT DATE = 1/27/2025	DATE -	REVISED -		SCALE: 1" = 50' SHEET 1 OF 2 SHEETS STA. TO STA.		ILLINOIS	FED. AID PROJECT		

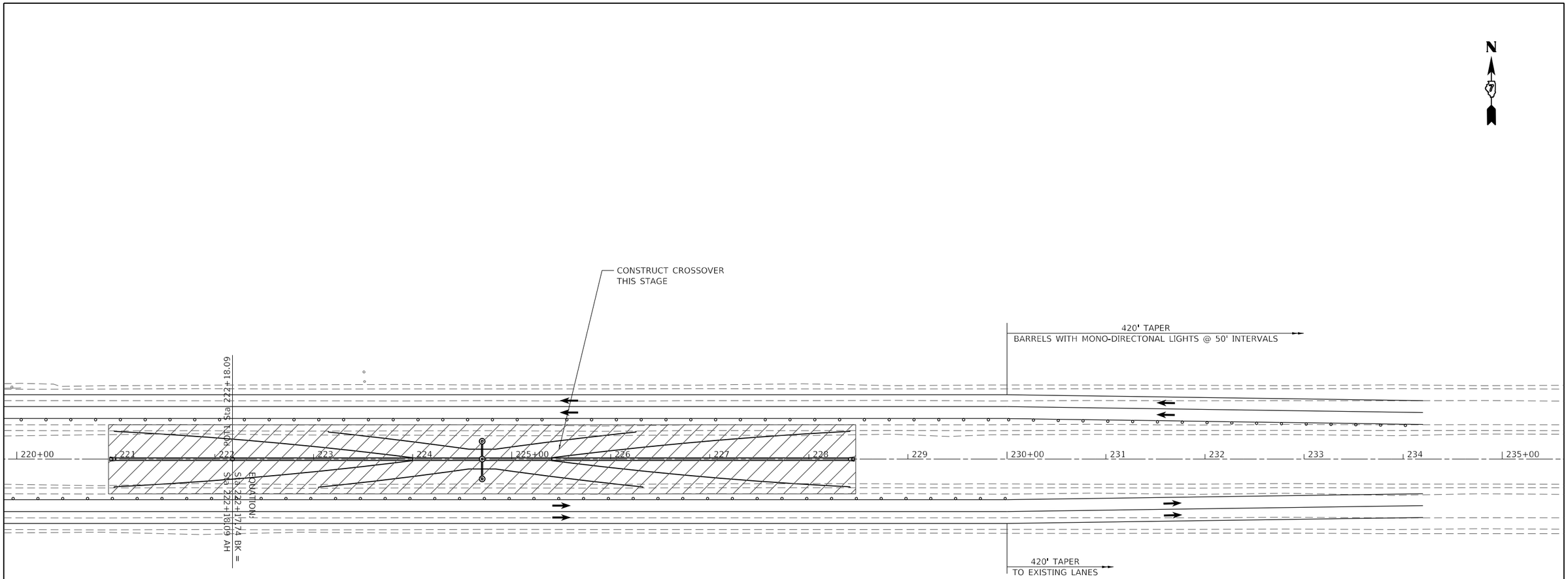

STAGE 1 WORK AREA

0' 50' 100'
GRAPHIC SCALE
1" = 50'

MODEL: Default
FILE NAME: H:\8370 IDOT I-70 over E Little Creek\8370 000 I-70 over E Little Creek PH 1&2-HMG\CAD Sheets\0774A01-sht-sh-MOTStage1.dgn

HMG ENGINEERS IL PROF DESIGN FIRM 184.000899	USER NAME = tkruep	DESIGNED -	REVISED -	STATE OF ILLINOIS DEPARTMENT OF TRANSPORTATION	STAGE 1 MAINTENANCE OF TRAFFIC	F.A.I. RTE.	SECTION	COUNTY	TOTAL SHEETS	SHEET NO.
		DRAWN -	REVISED -			70	(12-53B-1)BR-1	CLARK	93	27
	PLOT SCALE = 100.0000 ' / in.	CHECKED -	REVISED -					CONTRACT NO. 74A01		
	PLOT DATE = 1/27/2025	DATE -	REVISED -		SCALE: 1" = 50' SHEET 2 OF 2 SHEETS STA. TO STA.		ILLINOIS	FED. AID PROJECT		

SECTION B–B

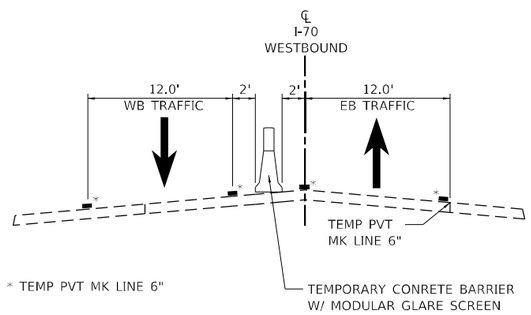

STAGE 2 SUGGESTED SEQUENCE OF OPERATIONS

1. MOVE EB TRAFFIC TO WB PASSING LANE FAI-70 AFTER PLACING TEMPORARY CONCRETE BARRIER, PLACING STEEL PLATE BEAM GUARDRAIL ON INSIDE DEPARTURE PARAPET WALL OF EXISTING SN 012-0006 AND STRIPING FOR STAGE 2.
2. CONSTRUCT PR SN 012-0007.
3. COMPLETE STRIPING FOR STAGE 3 ON PORTIONS OF EB I-70 WHICH ARE CLOSED.

N

STA 211+41 TO STA 218+98
ALL TRAFFIC ON WEST BOUND LANES

TEMP PVT MK L 6 PNT
YELLOW

330'
(6' LANE TAPER)

END TEMP CONC BARRIER
STA 224+50

STAGE 2 TEMPORARY
CONCRETE BARRIER W/
MODULAR GLARE SCREEN

TEMP PVT MK L 6 PNT
WHITE

12'

12'

POT1 Sta 209+05.58

B

B

196 197 198 199 200+00 201 202 203 204 205+00 206 207 208 209 210+00 211

12'

EQUATION:
Sta 209+05.75 BK =
Sta 209+05.58 AH

TEMP PVT MK L 6 PNT
YELLOW

TEMP PVT MK L 6 PNT
WHITE

STA 199+00

STEEL PLATE BEAM GUARDRAIL TYPE A, 6 FOOT POSTS, 250 L.F.
TRAFFIC BARRIER TERMINAL, TY 1 (SPL) TANGENT, 1 EA
TRAFFIC BARRIER TERMINAL, TY 6, 1 EACH

DIRECTION INDICATOR BARRICADES W/STEADY
BURN MONODIRECTIONAL LIGHT @ 50' CTRS
HIGHWAY STANDARDS 701400 & 701401

0' 50' 100'
GRAPHIC SCALE
1" = 50'

MODEL: Default
FILE NAME: \\HMG\Jobs\8370 IDOT I-70 over E Little Creek\8370_000 I-70 over E Little Creek PH 1&2-HMG\CAD Sheets\0774A01-sht-all-MOTStage2.dgn

HMG ENGINEERS IL PROF DESIGN FIRM 184.000899	USER NAME = tkruep	DESIGNED -	REVISED -	STATE OF ILLINOIS DEPARTMENT OF TRANSPORTATION	STAGE 2 MAINTENANCE OF TRAFFIC	F.A.I. RTE.	SECTION	COUNTY	TOTAL SHEETS / SHEET NO.
		DRAWN -	REVISED -			70	(12-53B-1)BR-1	CLARK	93 / 28
	PLOT SCALE = 100.0000 ' / in.	CHECKED -	REVISED -					CONTRACT NO. 74A01	
	PLOT DATE = 1/27/2025	DATE -	REVISED -		SCALE: 1" = 50' SHEET 1 OF 2 SHEETS STA. TO STA.		ILLINOIS	FED. AID PROJECT	

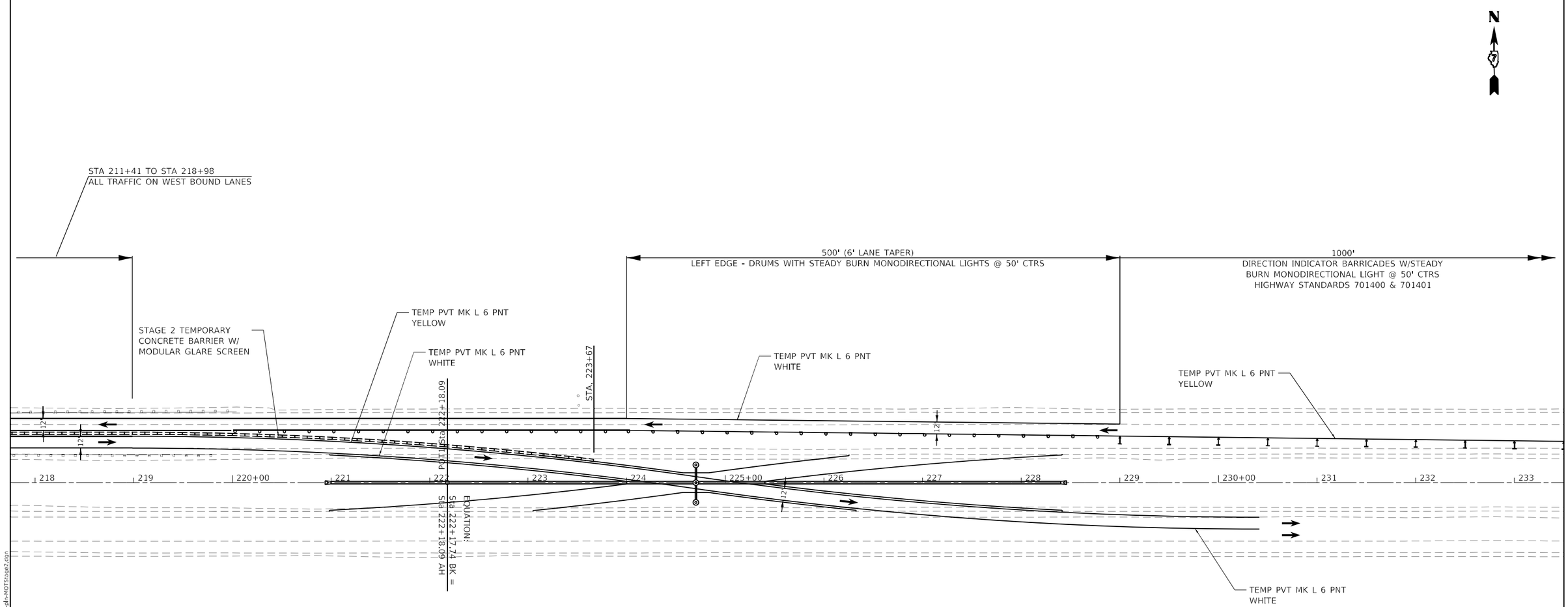

0' 50' 100'
GRAPHIC SCALE
1" = 50'

MODEL: Default
FILE NAME: \\HMG\data\8370_IDOT_I-70 over E Little Creek\8370_000_I-70 over E Little Creek PH 162-HMG\CAD_Sheets\0774A01-sht-sft-MOTStage2.dgn

HMG ENGINEERS IL PROF DESIGN FIRM 184.000899	USER NAME = tkruep	DESIGNED -	REVISED -	STATE OF ILLINOIS DEPARTMENT OF TRANSPORTATION	STAGE 2 MAINTENANCE OF TRAFFIC	F.A.I. RTE.	SECTION	COUNTY	TOTAL SHEETS	SHEET NO.
		DRAWN -	REVISED -			70	(12-53B-1)BR-1	CLARK	93	29
	PLOT SCALE = 100.0000 ' / in.	CHECKED -	REVISED -					CONTRACT NO. 74A01		
	PLOT DATE = 1/27/2025	DATE -	REVISED -		SCALE: 1" = 50' SHEET 2 OF 2 SHEETS STA. TO STA.		ILLINOIS	FED. AID PROJECT		

STAGE 3 SUGGESTED SEQUENCE OF OPERATIONS

1. MOVE WB TRAFFIC TO EB PASSING LANE OF FAI-70 AFTER PLACING TEMPORARY CONCRETE BARRIER, PLACING STEEL PLATE BEAM GUARDRAIL ON INSIDE DEPARTURE PARPET WALL OF NEW SN 012-0007 AND STRIPING FOR STAGE 3.
2. CONSTRUCT PROPOSED SN 012-0006.
3. REMOVE ALL TEMPORARY CONCRETE BARRIER AND IMPACT ATTENUATORS.
4. PLACE FINAL PAVEMENT MARKINGS AND REFLECTORS AND GRIND RUMBLE STRIPS.

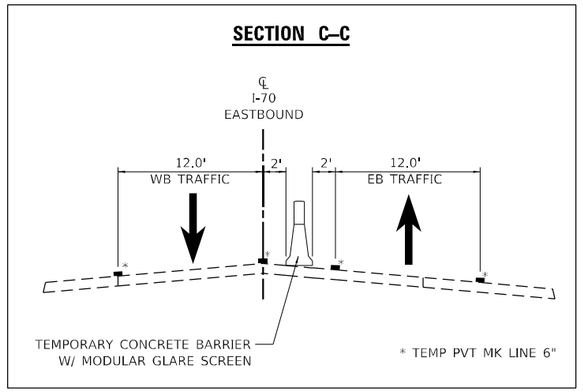

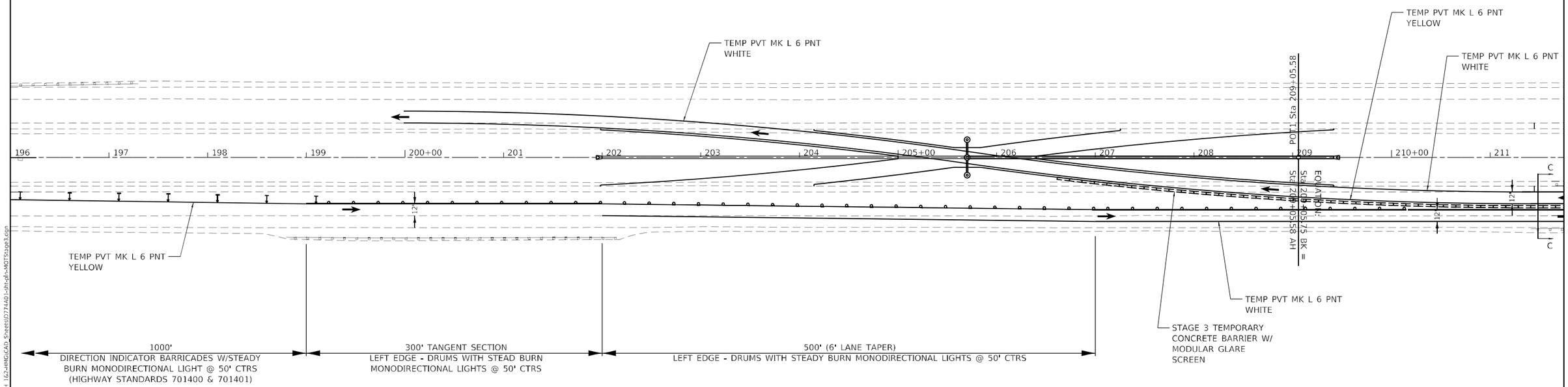

SEE HIGHWAY STANDARD 701400 &
701416 FOR DETAILS NOT SHOWN

MODEL: Default
FILE NAME: \\HMG\Jobs\8370 IDOT? I-70 over E Little Creek\8370_000 I-70 over E Little Creek PH 1 62-HMG\CAD_Sheets\0774A01-sht-plh-MOTStage3.dgn

HMG ENGINEERS IL PROF DESIGN FIRM 184.000899	USER NAME = tkruep	DESIGNED -	REVISED -	STATE OF ILLINOIS DEPARTMENT OF TRANSPORTATION	STAGE 3 MAINTENANCE OF TRAFFIC	F.A.I. RTE.	SECTION	COUNTY	TOTAL SHEETS / SHEET NO.
		DRAWN -	REVISED -			70	(12-53B-1)BR-1	CLARK	93 / 30
	PLOT SCALE = 100.0000 ' / in.	CHECKED -	REVISED -					CONTRACT NO. 74A01	
	PLOT DATE = 1/27/2025	DATE -	REVISED -		SCALE: 1" = 50' SHEET 1 OF 2 SHEETS STA. TO STA.		ILLINOIS	FED. AID PROJECT	

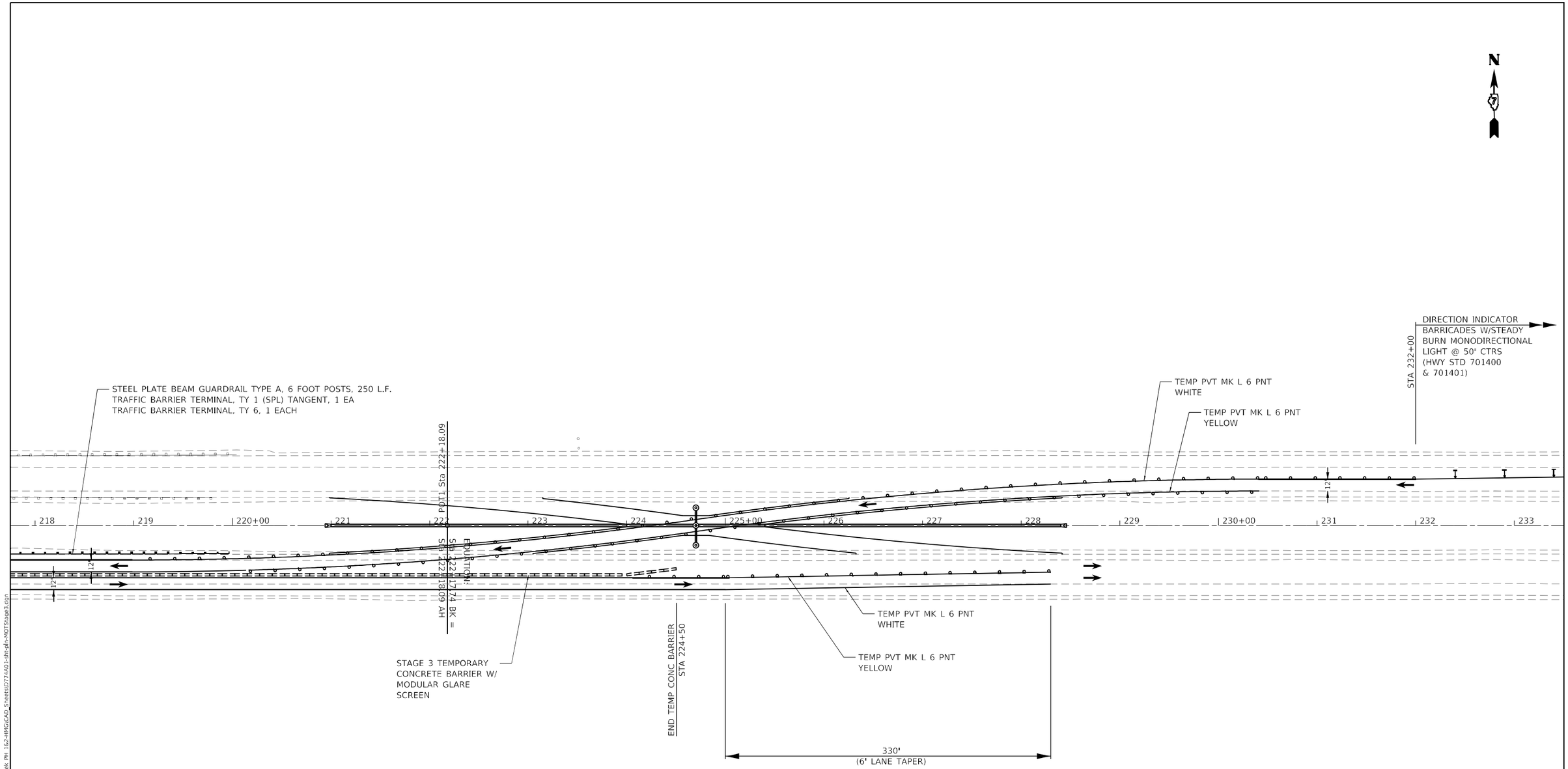

SEE HIGHWAY STANDARD 701400 & 701416 FOR DETAILS NOT SHOWN

MODEL: Default
FILE NAME: \\HMG\Jobs\8370 IDOT I-70 over E Little Creek\8370_000 I-70 over E Little Creek PH 1&2-HMG\CAD Sheets\0774A01-sht-all-MOTStage3.dgn

HMG ENGINEERS IL PROF DESIGN FIRM 184.000899	USER NAME = tkruep	DESIGNED -	REVISED -	**STATE OF ILLINOIS DEPARTMENT OF TRANSPORTATION**	**STAGE 3 MAINTENANCE OF TRAFFIC**	F.A.I. RTE.	SECTION	COUNTY	TOTAL SHEETS	SHEET NO.
		DRAWN -	REVISED -			70	(12-53B-1)BR-1	CLARK	93	31
	PLOT SCALE = 100.0000 ' / in.	CHECKED -	REVISED -		SCALE: 1" = 50' SHEET 2 OF 2 SHEETS STA. TO STA.			CONTRACT NO. 74A01		
	PLOT DATE = 1/27/2025	DATE -	REVISED -				ILLINOIS	FED. AID PROJECT		

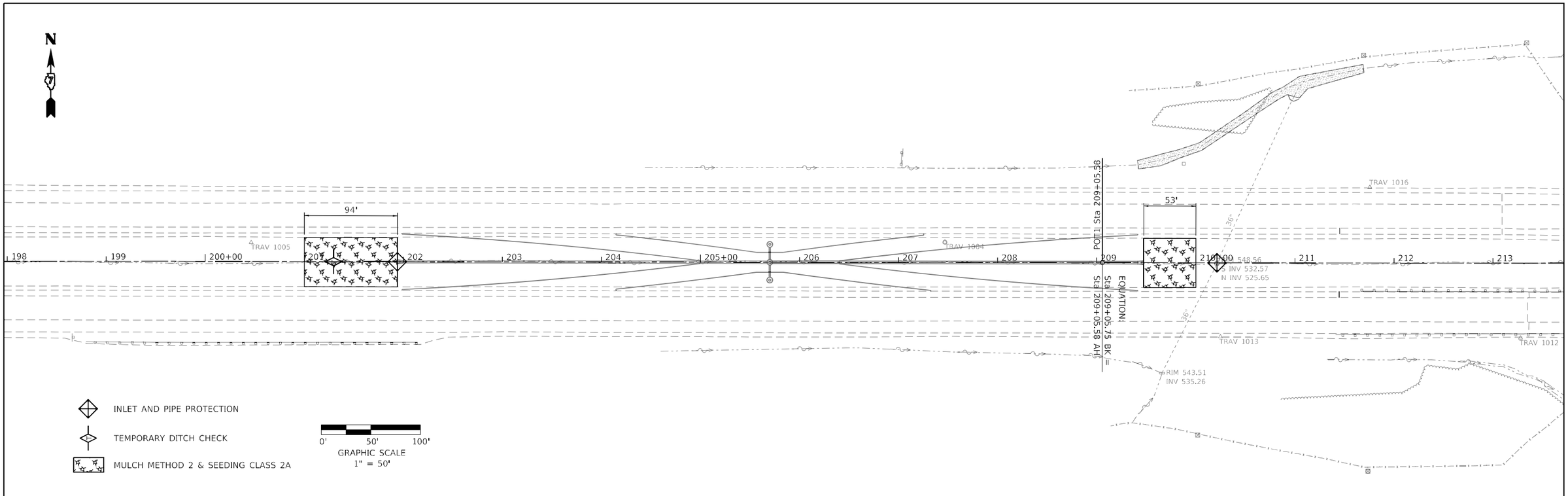

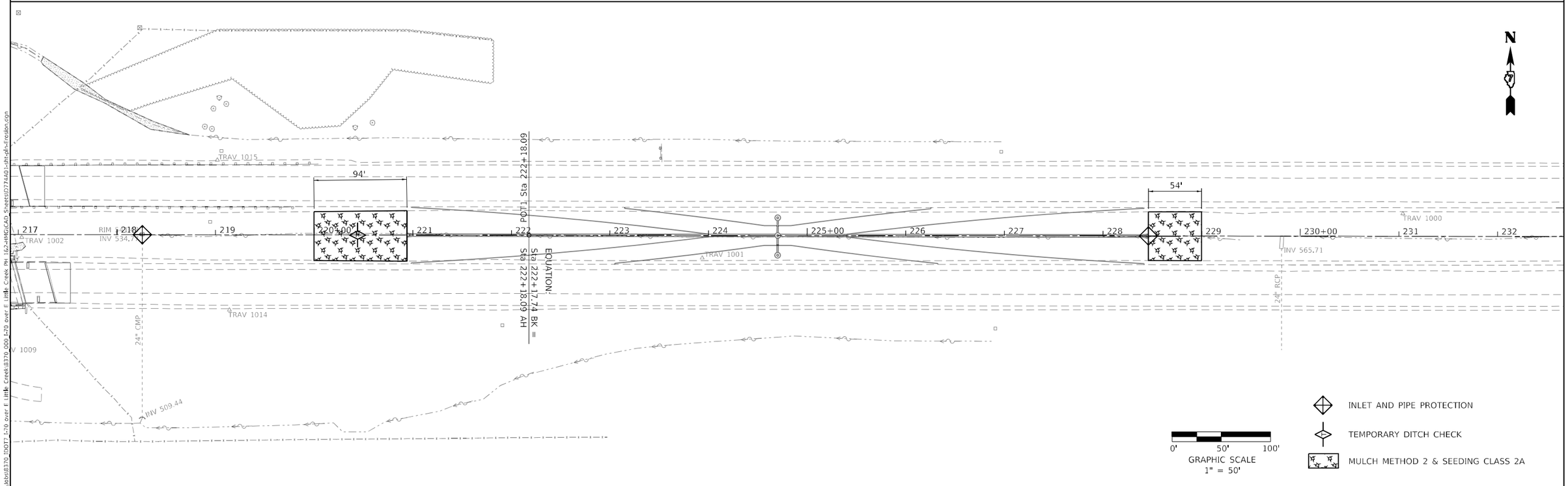

MODEL: Default
FILE NAME: \\HMG\Jobs\8370 IDOT I-70 over E Little Creek\8370_000 I-70 over E Little Creek PH 1&2-HMG\CAD Sheets\0774A01-sht-ero-Erosion.dgn

HMG
ENGINEERS
IL PROF DESIGN FIRM 184.000899

USER NAME = tkruep	DESIGNED -	REVISED -	
	DRAWN -	REVISED -	
PLOT SCALE = 100.0000 ' / in.	CHECKED -	REVISED -	
PLOT DATE = 1/27/2025	DATE -	REVISED -	

STATE OF ILLINOIS
DEPARTMENT OF TRANSPORTATION

EROSION CONTROL & SEEDING PLAN

SCALE: 1" = 50' | SHEET 1 OF 1 SHEETS | STA. TO STA.

F.A.I. RTE.	SECTION	COUNTY	TOTAL SHEETS	SHEET NO.
70	(12-538-1)BR-1	CLARK	93	32
		CONTRACT NO. 74A01		
	ILLINOIS	FED. AID PROJECT		

www.invarion.com

74A01

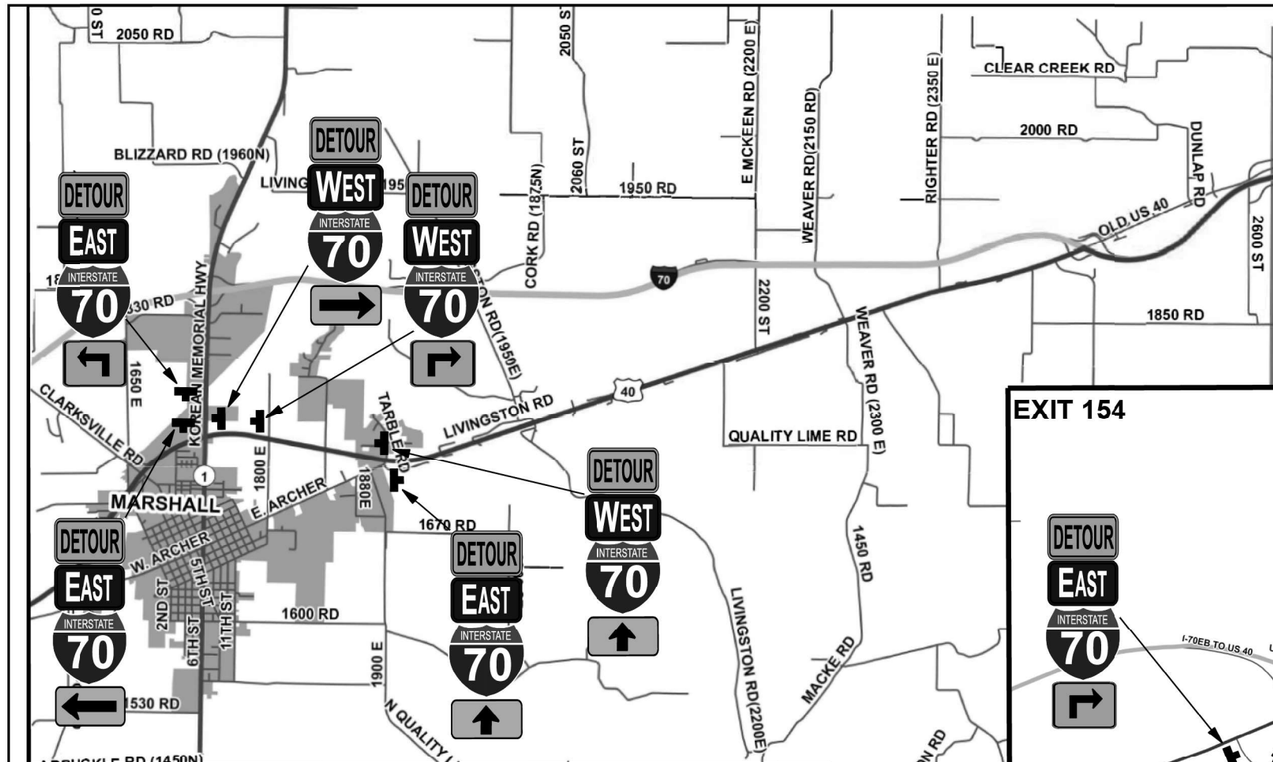

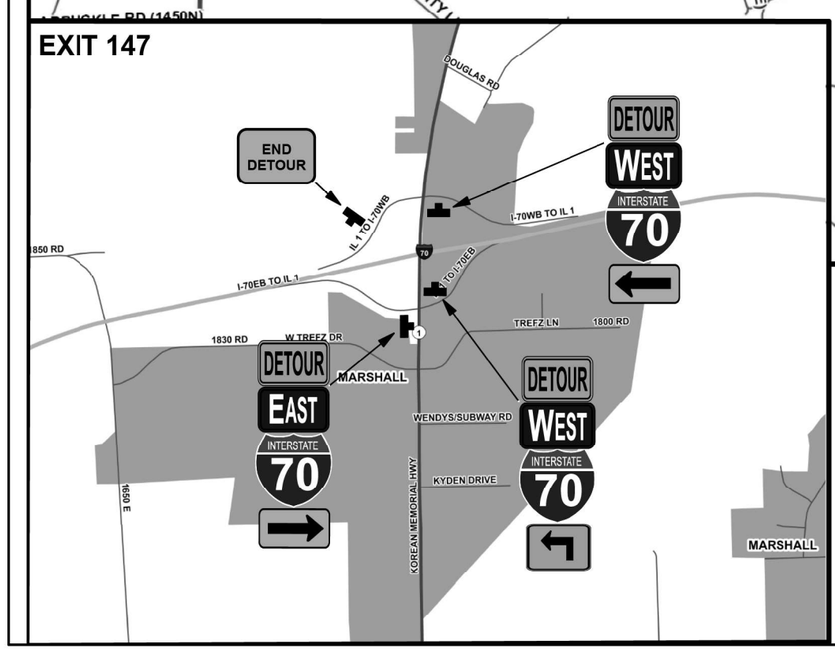

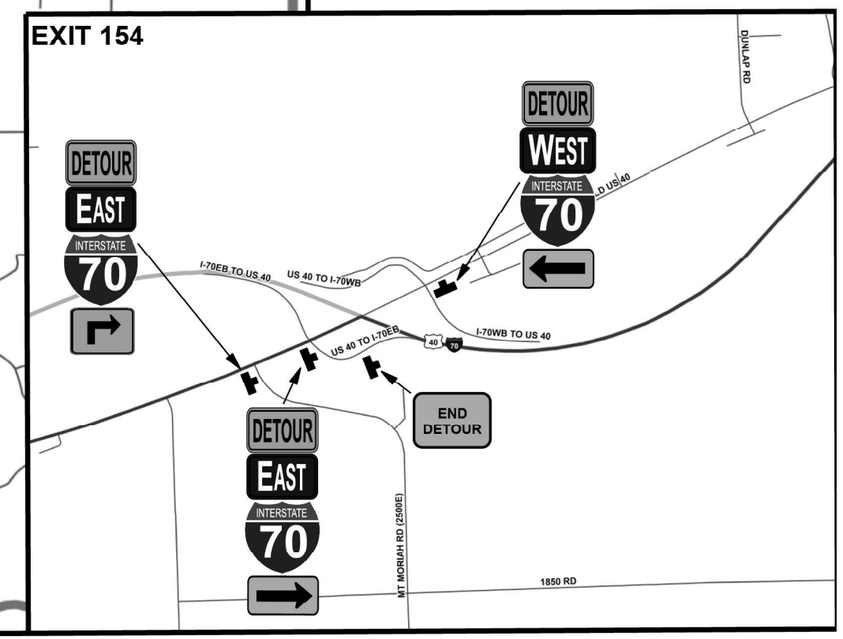

LEGEND

DETOUR	M4-8(O)-3015		M6-1L(O)-3018
END DETOUR	M4-8a(O)-3024		M6-1R(O)-3018
INTERSTATE 70	M1-1-36		M6-3(O)-3018
EAST	M3-2(BL)-3015		M5-1R(O)-3018
WEST	M3-4(BL)-3015		M5-1L(O)-3018

MODEL: Default
FILE NAME: \\HMGJobs\8370 IDOT? I-70 over - Little Creek\8370 000 I-70 over E Little Creek PH 1&2-HMG\CAD Sheets\D774A01-sht-detourplan.dgn

HMG
ENGINEERS
IL PROF DESIGN FIRM 184.000899

USER NAME = tkruep	DESIGNED - M. O'BRIEN	REVISED -
	DRAWN - M. O'BRIEN	REVISED -
PLOT SCALE = 100.0000 ' / in.	CHECKED -	REVISED -
PLOT DATE = 1/27/2025	DATE -	REVISED -

STATE OF ILLINOIS
DEPARTMENT OF TRANSPORTATION

DETOUR SIGNING PLAN

SCALE: N.T.S. | SHEET 1 OF 1 SHEETS | STA. TO STA.

F.A.I. RTE.	SECTION	COUNTY	TOTAL SHEETS	SHEET NO.
70	(12-53B-1)BR-1	CLARK	93	33

CONTRACT NO. 74A01

ILLINOIS | FED. AID PROJECT

Benchmark: BM 701; Brass Disc on NE Wingwall on SN 012-0006 (Stamped Elev. 544.01), Station 216+90, 68.2' Left; Elev. 543.994.

Existing Structure: SN 012-0006 and SN 012-0007 were originally constructed in 1968 as Section 12-53B-1 to carry I-70 over East Little Creek. Each superstructure consists of a 7¾" reinforced concrete deck supported on three continuous spans of 44" web plate girder. Substructure elements consist of concrete stub abutments and hammerhead piers. In 2002, the deck was replaced and the abutments were converted to semi-integral abutments. The structures are 236'-3" bk.-to-bk. of abutments and 43'-2" out-to-out of deck. The original skew is 15° right-forward. The existing superstructure will be removed and replaced. Traffic will be maintained utilizing cross-overs. SN 012-0006 will be replaced first due to its poor deck condition.

No Salvage.

SCOPE OF WORK

1. Remove and replace existing superstructure and construct new approach slabs.
2. Rebuild semi-intregal abutments and portions of the existing wingwalls.
3. Place semi-integral drain detail behind abutments.
4. Remove and replace existing concrete slopewall and revetment mat with stone riprap.

APPROVED
For Structural Adequacy Only
Engineer of Bridges & Structures

KEITH W. BENTING
STATE OF ILLINOIS
4777
DECATUR, ILLINOIS
LICENSED STRUCTURAL ENGINEER

Keith W. Benting 1/22/2025
Keith W. Benting, Illinois S.E. 081-004777 Date
Expires 11/30/2024

LOADING HL-93

Allow 50#/sq. ft. for future wearing surface.

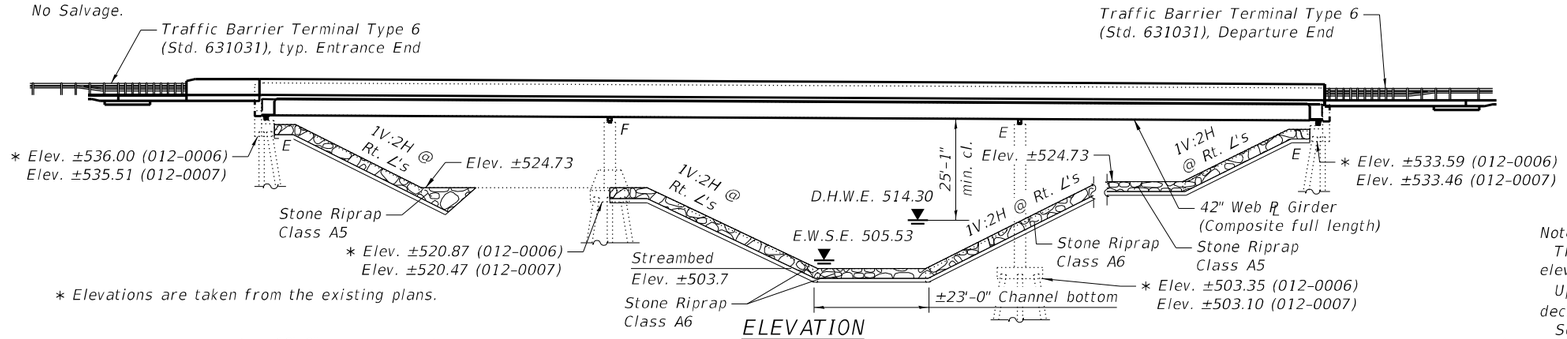

ELEVATION

Notes:
The elevations shown in the plan represent elevations after grinding.
Up to ¼" may be ground off the bridge deck and the bridge approach slabs.
See sheet 2 of 45 for sections A-A and B-B.

DESIGN SPECIFICATIONS

2020 AASHTO LRFD Bridge Design Specification, 9th Edition

2006 Seismic Retrofitting Manual For Highway Structures: Part 1 - Bridges (FHWA-HRT-06-032)

DESIGN STRESSES

NEW CONSTRUCTION

f'c = 3,500 psi
f'c = 4,000 psi (Superstructure)
fy = 60,000 psi (Reinforcement)
fy = 50,000 psi (Structural Steel, M270 Grade 50)

All structural steel shall be metalized.

EXISTING CONSTRUCTION

fc = 1,400 psi (Substructure Concrete)
fs = 20,000 psi (Substructure Reinforcement)

SEISMIC DATA

Seismic Retrofit Category (SRC) = B
Design Spectral Acceleration at 1.0 sec (SD1) = 0.170g
Design Spectral Acceleration at 0.2 sec (SDS) = 0.349g
Soil Site Class = D
Performance Level = Life Safety

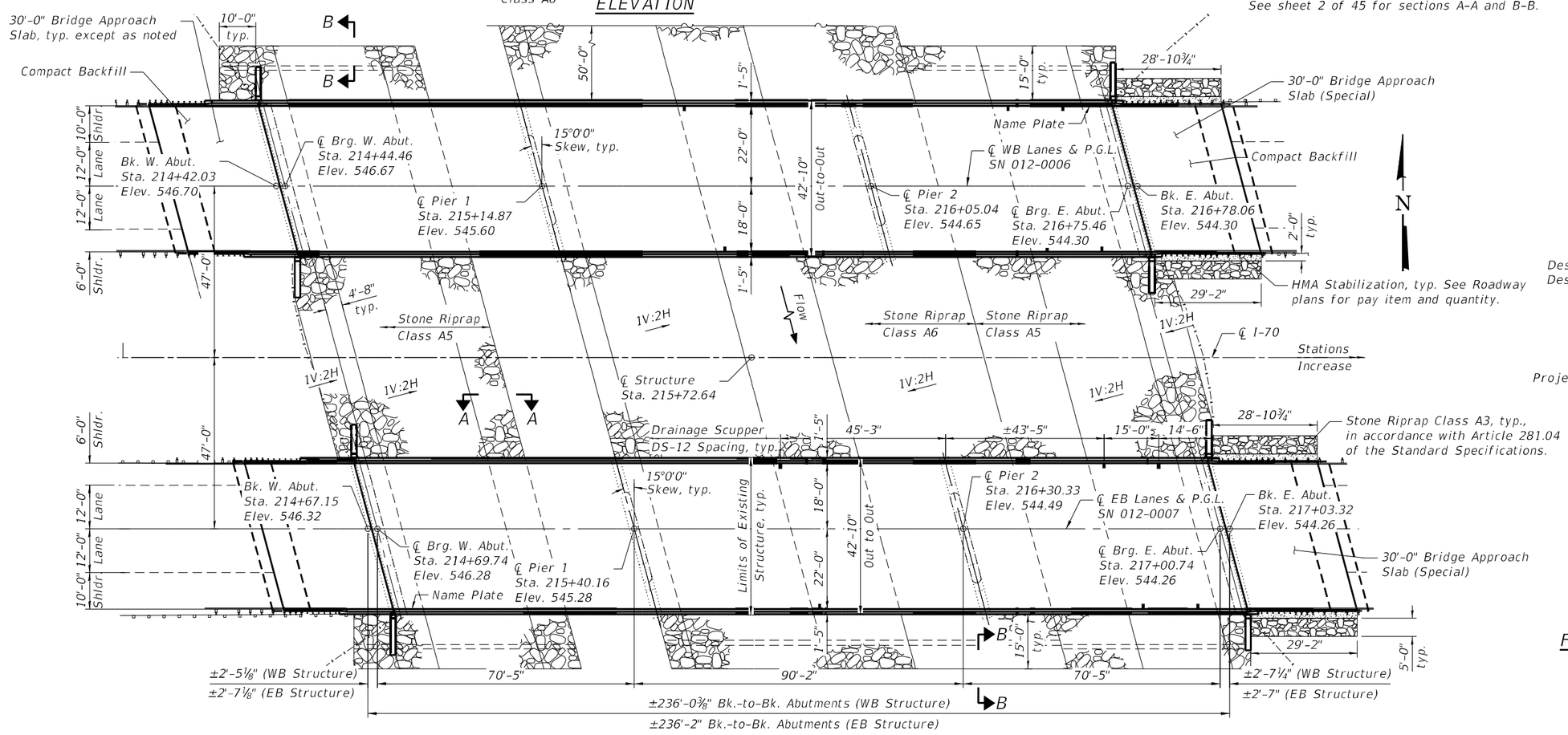

PLAN

Range 11W, 2nd P.M.

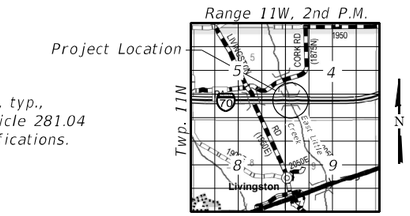

LOCATION SKETCH

GENERAL PLAN AND ELEVATION
I-70 OVER EAST LITTLE CREEK
F.A.I. 70 - SECTION (12-53B-1)BR-1
CLARK COUNTY
STA. 215+72.64
STRUCTURE NO. 012-0006 (WB) & 012-0007 (EB)

QUIGG ENGINEERING INC

USER NAME = JCray	DESIGNED - KFO	REVISED -	
0120006_0120007-74A01-001-GPE.dgn	CHECKED - KWB	REVISED -	
PLOT SCALE =	DRAWN - JDC	REVISED -	
PLOT DATE =	CHECKED - RPW	REVISED -	

STATE OF ILLINOIS
DEPARTMENT OF TRANSPORTATION

GENERAL PLAN AND ELEVATION
STRUCTURE NO. 012-0006 (WB) & 012-0007 (EB)
SHEET 1 OF 45 SHEETS

F.A.I. RTE.	SECTION	COUNTY	TOTAL SHEETS	SHEET NO.
70	(12-53B-1)BR-1	CLARK	93	34
		CONTRACT NO. 74A01		
		ILLINOIS	FED. AID PROJECT	

MODEL: Default
FILE NAME: S:\2022\2212IL010 - PTB 202-35 - D7 - HMG - I-70 Ph II\CADD\CADD Sheets\0120006_0120007-74A01-001-GPE.dgn
1/22/2025 10:46:56 AM

GENERAL NOTES

Fasteners shall be ASTM F 3125 Grade A325 Type 1. hot dip galvanized bolts in metallized areas. Bolts 7/8 in. diameter, holes 15/16 in. diameter, unless otherwise noted. See special provision for "Metalizing of Structural Steel".

Calculated Weight of Structural Steel = 43,620 lbs (M270 Grade 36)
= 459,330 lbs (M270 Grade 50)

All structural steel shall be metallized. See Special Provision for "Metallizing of Structural Steel."

No field welding is permitted except as specified in the contract documents.

Reinforcement bars designated (E) shall be epoxy coated.

If the Contractor elects to use cantilever forming brackets on the exterior beams or girders, the brackets shall be placed at the same locations as required for hardwood blocks in Article 503.06(b) of the Standard Specifications. If additional cantilever forming brackets are required, hardwood blocking shall be wedged between the exterior and first interior beam at each of these additional bracket locations.

Bearing seat surfaces shall be constructed or adjusted to the designated elevations within a tolerance of 1/8 in. (0.01 ft.). Adjustment shall be made either by grinding the surface or by shimming the bearings.

Layout of the slope protection system may be varied to suit ground conditions in the field as directed by the Engineer.

Plan dimensions and details relative to the existing structure have been taken from existing plans are subject to normal construction variations. The Contractor shall field verify existing dimensions and details affecting new construction and make necessary approved adjustments prior to construction or ordering of materials. Such variation shall not be cause for additional compensation for a change in scope of work, however, the Contractor will be paid for the quantity actually furnished at the unit price bid for the work.

The existing structural steel coating contains lead. The Contractor shall take appropriate precautions to address the presence of lead on this project.

See Top of Slab Elevations Tabels for exact Stations and Offsets of ℄ Bearing of each girder at each substructure unit.

WATERWAY INFORMATION

Existing Overtopping Elev.= 544.17 at Sta. 216+77
Drainage Area = 5.6 sq. mi. Proposed Overtopping Elev.= 544.17 at Sta. 216+77

Flood	Freq. Yr.	Discharge (cfs)	Opening Ft²		Nat. H.W.E.	Head - Ft.		Headwater El.	
			Exist.	Prop.		Exist.	Prop.	Exist.	Prop.
Ten-Year	10	1,640	311	311	512.7	0	0	512.7	512.7
Design	50	2,720	407	407	514.3	0.3	0.3	514.6	514.6
Base	100	3,210	435	435	514.9	0.5	0.5	515.4	515.4
Scour Check	200	3,520	458	458	515.2	0.7	0.7	515.9	515.9
Max. Calc.	500	4,440	527	527	516.3	1.1	1.1	517.4	517.4

10-Year Velocity through Existing Structure = 5.3 fps
10-Year Velocity through Proposed Structure = 5.3 fps

DESIGN SCOUR ELEVATION TABLE

Event / Limit State	Design Scour Elevations (ft.)				Item 113
	W. Abut.	Pier 1	Pier 2	E. Abut.	
Q100	535.5	520.4	507.3	533.5	8
Design	535.5	520.4	503.1	533.5	

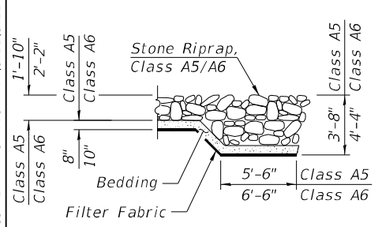

SECTION B-B

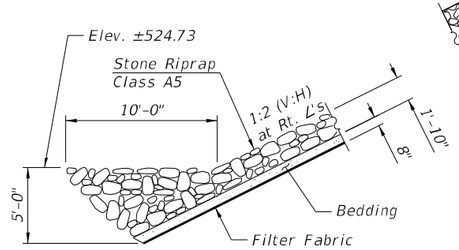

SECTION A-A

INDEX OF SHEETS

TOTAL BILL OF MATERIAL

ITEM	UNIT	SN 012-0006 (WB)		SN 012-0007 (EB)		TOTAL
		SUPER	SUB	SUPER	SUB	
Stone Riprap, Class A3	Sq. Yd.		37		37	74
Stone Riprap, Class A5	Sq. Yd.		1,026		1,029	2,055
Stone Riprap, Class A6	Sq. Yd.		1,570		1,110	2,680
Filter Fabric	Sq. Yd.		2,596		2,139	4,735
Removal of Existing Superstructures No. 1	Each	1				1
Removal of Existing Superstructures No. 2	Each			1		1
Concrete Removal	Cu. Yd.		8.0		8.3	16.3
Slope Wall Removal	Sq. Yd.		1,148		1,013	2,161
Structure Excavation	Cu. Yd.		268		272	540
Concrete Structures	Cu. Yd.		34.3		34.6	68.9
Concrete Superstructure	Cu. Yd.	413.3		413.5		826.8
Protective Coat	Sq. Yd.	1,563		1,563		3,126
Concrete Superstructure (Approach Slab)	Cu. Yd.	117.7		117.7		235.4
Furnishing & Erecting Structural Steel	L Sum	0.5		0.5		1.0
Stud Shear Connectors	Each	6,876		6,876		13,752
Reinforcement Bars, Epoxy Coated	Pound	138,890	5,400	138,910	5,420	288,620
Name Plates	Each	1		1		2
Elastomeric Bearing Assembly, Type I	Each		18		18	36
Anchor Bolts, 1"	Each		36		36	72
Anchor Bolts, 1¼"	Each		24		24	48
Granular Backfill for Structures	Cu. Yd.		270		280	550
Geocomposite Wall Drain	Sq. Yd.		125		127	252
Pipe Underdrains for Structures, 4"	Foot		170		170	340
Drainage Scuppers, DS-12	Each	6		6		12
Diamond Grinding (Bridge Section)	Sq. Yd.	1,340		1,340		2,680
Bar Terminator	Each	286		286		572
Bridge Deck Grooving (Longitudinal)	Sq. Yd.	785		785		1,570

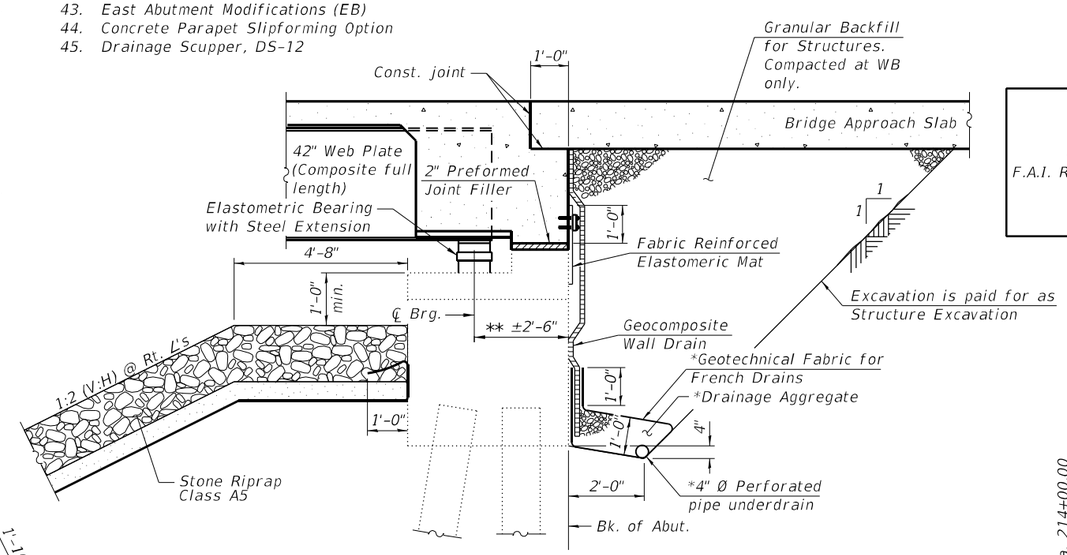

SECTION THRU SEMI-INTEGRAL ABUTMENT

(Horiz. dim. at Rt. L's)

∗ Included in the cost of Pipe Underdrains for Structures.
** See Top of Slab Elevations Tables for exact Stations and Offsets of ℄ Bearing of each girder.

Note:
All drainage system components shall extend to 2'-0" from the end of each wingwall except an outlet pipe shall extend until intersecting with the side or front slopes. The pipes shall drain into concrete headwalls. (See Article 601.05 of the Standard Specifications and Highway Standard 601101).

STA. 215+72.64
RE-BUILT BY
STATE OF ILLINOIS
F.A.I. RT. 70 Sec. (12-53B-1)BR-1
LOADING HL-93
STR. NO. 012-0006

STA. 215+72.64
RE-BUILT BY
STATE OF ILLINOIS
F.A.I. RT. 70 Sec. (12-53B-1)BR-1
LOADING HL-93
STR. NO. 012-0007

NAME PLATES

See Std. 515001

Note:
Existing Name Plate shall be cleaned and relocated next to new Name Plate. Cost included with Name Plates.

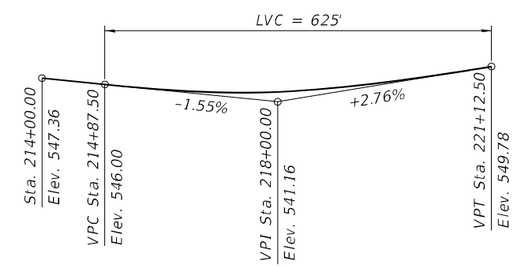

PROFILE GRADE - I-70

(Along ℄ WB & EB Lanes)

Note:
The profile grade shows the final elevations after grinding.

MODEL: Default
FILE NAME: S:\2022\22IL010 - PTB 202-35 - D7 - HMG - I-70 Ph II\CADD\CADD Sheets\0120006_0120007-74A01-002-General Details.dgn
1/22/2025 10:47:08 AM

QUIGG ENGINEERING INC

USER NAME = JCray	DESIGNED - KFO	REVISED -	
0120006_0120007-74A01-002-General Details.dgn	CHECKED - KWB	REVISED -	
PLOT SCALE =	DRAWN - JDC	REVISED -	
PLOT DATE =	CHECKED - RPW	REVISED -	

STATE OF ILLINOIS
DEPARTMENT OF TRANSPORTATION

GENERAL DATA
STRUCTURE NO. 012-0006 (WB) & 012-0007 (EB)

SHEET 2 OF 45 SHEETS

F.A.I. RTE.	SECTION	COUNTY	TOTAL SHEETS	SHEET NO.
70	(12-53B-1)BR-1	CLARK	93	35

CONTRACT NO. 74A01

ILLINOIS | FED. AID PROJECT

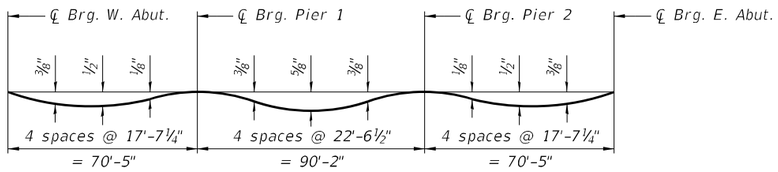

DEAD LOAD DEFLECTION DIAGRAM

(Includes weight of concrete only.)

Note:
The above deflections are not to be used in the field if the engineer is working from the grade elevations adjusted for dead load deflections and grinding as shown on sheets 4 through 6 of 45.

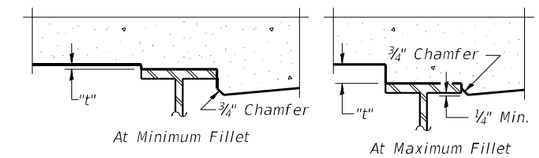

To determine "t": After all structural steel has been erected, elevations of the top flanges of the beams shall be taken at intervals shown below. These elevations subtracted from the "Theoretical Grade Elevations Adjusted for Dead Load Deflection and Grinding" shown on sheets 4 through 6 of 45, minus the initial slab thickness prior to grinding, equals the fillet heights "t" above top flange of beams.
The slab is to be ground after curing to achieve smoothness, but the slab is not to be ground to elevations below the "Theoretical Grade Elevations" shown on sheets 4 through 6 of 45. For grinding the deck, see Special Provisions.

FILLET HEIGHTS

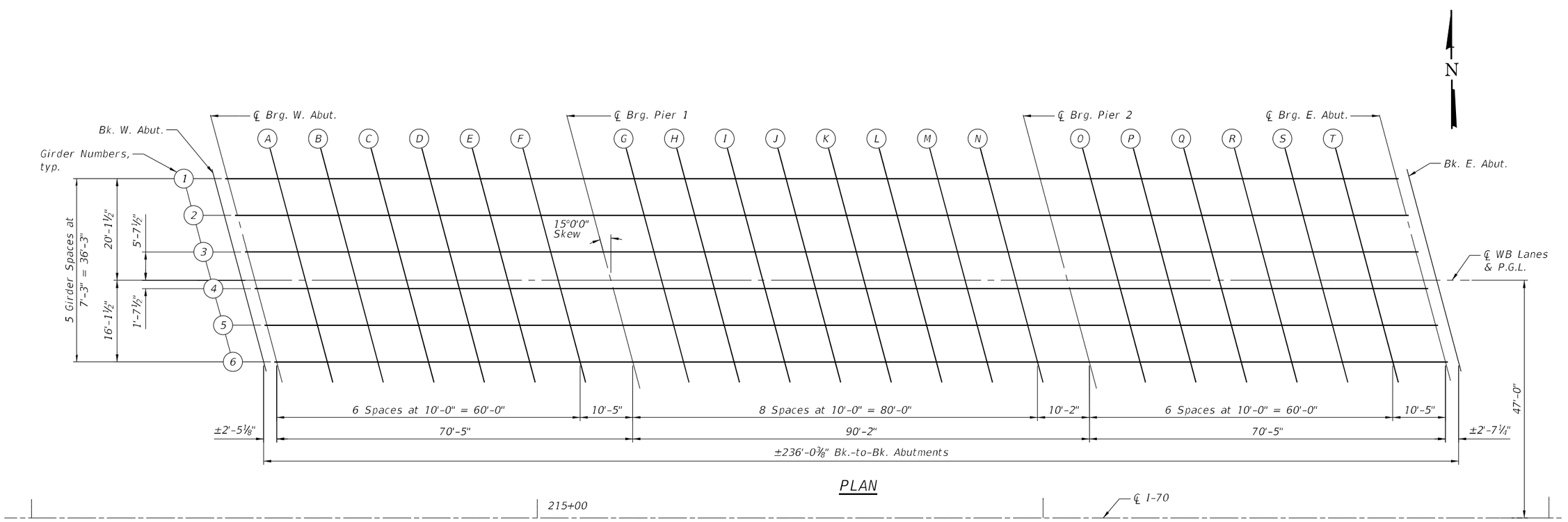

PLAN

QUIGG ENGINEERING INC	USER NAME = JCray	DESIGNED - KFO	REVISED -	STATE OF ILLINOIS DEPARTMENT OF TRANSPORTATION	TOP OF SLAB ELEVATIONS (1 OF 4) (WB) STRUCTURE NO. 012-0006 (WB)
	0120006_0120007-74A01-003-TOS Elev WB.dgn	CHECKED - KWB	REVISED -		
	PLOT SCALE =	DRAWN - JDC	REVISED -		
	PLOT DATE =	CHECKED - RPW	REVISED -		SHEET 3 OF 45 SHEETS

F.A.I. RTE.	SECTION	COUNTY	TOTAL SHEETS	SHEET NO.
70	(12-53B-1)BR-1	CLARK	93	36
		CONTRACT NO. 74A01		
	ILLINOIS	FED. AID PROJECT		

MODEL: Default
FILE NAME: S:\2022\22IL010 - PTB 202-35 - D7 - HMG - I-70 PH I-HI\CADD\CADD Sheets\0120006_0120007-74A01-003-TOS Elev WB.dgn
1/22/2025 10:47:17 AM

GIRDER 1

Location	Station	Offset	Theoretical Grade Elevations	Theoretical Grade Elevations Adjusted for Dead Load Deflections and Grinding
Bk. W. Abut.	214+36.64	-20.13	546.45	546.47
℄ Brg W. Abut.	214+39.07	-20.13	546.41	546.43
A	214+49.07	-20.13	546.25	546.29
B	214+59.07	-20.13	546.10	546.15
C	214+69.07	-20.13	545.94	546.00
D	214+79.07	-20.13	545.79	545.84
E	214+89.07	-20.13	545.63	545.67
F	214+99.07	-20.13	545.48	545.51
℄ Brg. Pier 1	215+09.48	-20.13	545.33	545.35
G	215+19.48	-20.13	545.20	545.23
H	215+29.48	-20.13	545.07	545.11
I	215+39.48	-20.13	544.95	545.01
J	215+49.48	-20.13	544.83	544.90
K	215+59.48	-20.13	544.72	544.79
L	215+69.48	-20.13	544.62	544.68
M	215+79.48	-20.13	544.52	544.57
N	215+89.48	-20.13	544.44	544.47
℄ Brg. Pier 2	215+99.65	-20.13	544.35	544.37
O	216+09.65	-20.13	544.28	544.30
P	216+19.65	-20.13	544.21	544.25
Q	216+29.65	-20.13	544.15	544.20
R	216+39.65	-20.13	544.10	544.16
S	216+49.65	-20.13	544.05	544.11
T	216+59.65	-20.13	544.01	544.05
℄ Brg. E. Abut.	216+70.07	-20.13	543.98	544.00
Bk. E. Abut.	216+72.67	-20.13	543.97	543.99

GIRDER 2

Location	Station	Offset	Theoretical Grade Elevations	Theoretical Grade Elevations Adjusted for Dead Load Deflections and Grinding
Bk. W. Abut.	214+38.58	-12.88	546.56	546.58
℄ Brg W. Abut.	214+41.01	-12.88	546.52	546.54
A	214+51.01	-12.88	546.37	546.41
B	214+61.01	-12.88	546.21	546.27
C	214+71.01	-12.88	546.06	546.12
D	214+81.01	-12.88	545.90	545.96
E	214+91.01	-12.88	545.75	545.79
F	215+01.01	-12.88	545.60	545.63
℄ Brg. Pier 1	215+11.42	-12.88	545.45	545.47
G	215+21.42	-12.88	545.32	545.35
H	215+31.42	-12.88	545.19	545.24
I	215+41.42	-12.88	545.07	545.13
J	215+51.42	-12.88	544.95	545.03
K	215+61.42	-12.88	544.85	544.92
L	215+71.42	-12.88	544.74	544.81
M	215+81.42	-12.88	544.65	544.70
N	215+91.42	-12.88	544.56	544.59
℄ Brg. Pier 2	216+01.59	-12.88	544.48	544.50
O	216+11.59	-12.88	544.41	544.44
P	216+21.59	-12.88	544.34	544.38
Q	216+31.59	-12.88	544.28	544.34
R	216+41.59	-12.88	544.23	544.29
S	216+51.59	-12.88	544.19	544.24
T	216+61.59	-12.88	544.15	544.19
℄ Brg. E. Abut.	216+72.01	-12.88	544.12	544.14
Bk. E. Abut.	216+74.61	-12.88	544.11	544.13

GIRDER 3

Location	Station	Offset	Theoretical Grade Elevations	Theoretical Grade Elevations Adjusted for Dead Load Deflections and Grinding
Bk. W. Abut.	214+40.52	-5.63	546.64	546.66
℄ Brg W. Abut.	214+42.95	-5.63	546.61	546.63
A	214+52.95	-5.63	546.45	546.49
B	214+62.95	-5.63	546.30	546.35
C	214+72.95	-5.63	546.14	546.20
D	214+82.95	-5.63	545.99	546.04
E	214+92.95	-5.63	545.83	545.87
F	215+02.95	-5.63	545.68	545.71
℄ Brg. Pier 1	215+13.36	-5.63	545.54	545.56
G	215+23.36	-5.63	545.40	545.43
H	215+33.36	-5.63	545.28	545.32
I	215+43.36	-5.63	545.16	545.22
J	215+53.36	-5.63	545.04	545.12
K	215+63.36	-5.63	544.94	545.01
L	215+73.36	-5.63	544.84	544.90
M	215+83.36	-5.63	544.75	544.79
N	215+93.36	-5.63	544.66	544.69
℄ Brg. Pier 2	216+03.53	-5.63	544.58	544.60
O	216+13.53	-5.63	544.51	544.54
P	216+23.53	-5.63	544.45	544.48
Q	216+33.53	-5.63	544.39	544.44
R	216+43.53	-5.63	544.34	544.40
S	216+53.53	-5.63	544.29	544.35
T	216+63.53	-5.63	544.26	544.30
℄ Brg. E. Abut.	216+73.95	-5.63	544.22	544.25
Bk. E. Abut.	216+76.55	-5.63	544.22	544.24

Notes:
Stations are measured along ℄ I-70.
Offsets are measured from WB P.G.L.

℄ WB LANES & P.G.L.

Location	Station	Offset	Theoretical Grade Elevations	Theoretical Grade Elevations Adjusted for Dead Load Deflections and Grinding
Bk. W. Abut.	214+42.03	0.00	546.70	546.73
℄ Brg W. Abut.	214+44.46	0.00	546.67	546.69
A	214+54.46	0.00	546.51	546.55
B	214+64.46	0.00	546.36	546.41
C	214+74.46	0.00	546.20	546.26
D	214+84.46	0.00	546.05	546.10
E	214+94.46	0.00	545.89	545.93
F	215+04.46	0.00	545.75	545.77
℄ Brg. Pier 1	215+14.87	0.00	545.60	545.62
G	215+24.87	0.00	545.47	545.50
H	215+34.87	0.00	545.34	545.39
I	215+44.87	0.00	545.22	545.29
J	215+54.87	0.00	545.11	545.19
K	215+64.87	0.00	545.01	545.08
L	215+74.87	0.00	544.91	544.97
M	215+84.87	0.00	544.82	544.87
N	215+94.87	0.00	544.73	544.76
℄ Brg. Pier 2	216+05.04	0.00	544.65	544.68
O	216+15.04	0.00	544.58	544.61
P	216+25.04	0.00	544.52	544.56
Q	216+35.04	0.00	544.46	544.52
R	216+45.04	0.00	544.41	544.47
S	216+55.04	0.00	544.37	544.43
T	216+65.04	0.00	544.33	544.38
℄ Brg. E. Abut.	216+75.46	0.00	544.30	544.33
Bk. E. Abut.	216+78.06	0.00	544.30	544.32

GIRDER 4

Location	Station	Offset	Theoretical Grade Elevations	Theoretical Grade Elevations Adjusted for Dead Load Deflections and Grinding
Bk. W. Abut.	214+42.47	1.63	546.67	546.69
℄ Brg W. Abut.	214+44.90	1.63	546.64	546.66
A	214+54.90	1.63	546.48	546.52
B	214+64.90	1.63	546.33	546.38
C	214+74.90	1.63	546.17	546.23
D	214+84.90	1.63	546.02	546.07
E	214+94.90	1.63	545.86	545.90
F	215+04.90	1.63	545.72	545.74
℄ Brg. Pier 1	215+15.31	1.63	545.57	545.59
G	215+25.31	1.63	545.44	545.47
H	215+35.31	1.63	545.31	545.36
I	215+45.31	1.63	545.19	545.26
J	215+55.31	1.63	545.08	545.16
K	215+65.31	1.63	544.98	545.05
L	215+75.31	1.63	544.88	544.95
M	215+85.31	1.63	544.79	544.84
N	215+95.31	1.63	544.71	544.74
℄ Brg. Pier 2	216+05.48	1.63	544.63	544.65
O	216+15.48	1.63	544.56	544.58
P	216+25.48	1.63	544.49	544.53
Q	216+35.48	1.63	544.44	544.49
R	216+45.48	1.63	544.39	544.45
S	216+55.48	1.63	544.34	544.40
T	216+65.48	1.63	544.31	544.35
℄ Brg. E. Abut.	216+75.90	1.63	544.28	544.30
Bk. E. Abut.	216+78.50	1.63	544.27	544.29

GIRDER 5

Location	Station	Offset	Theoretical Grade Elevations	Theoretical Grade Elevations Adjusted for Dead Load Deflections and Grinding
Bk. W. Abut.	214+44.41	8.88	546.53	546.56
℄ Brg W. Abut.	214+46.84	8.88	546.50	546.52
A	214+56.84	8.88	546.34	546.38
B	214+66.84	8.88	546.19	546.24
C	214+76.84	8.88	546.03	546.09
D	214+86.84	8.88	545.88	545.93
E	214+96.84	8.88	545.73	545.77
F	215+06.84	8.88	545.58	545.61
℄ Brg. Pier 1	215+17.25	8.88	545.44	545.46
G	215+27.25	8.88	545.31	545.34
H	215+37.25	8.88	545.18	545.23
I	215+47.25	8.88	545.06	545.13
J	215+57.25	8.88	544.95	545.03
K	215+67.25	8.88	544.85	544.92
L	215+77.25	8.88	544.75	544.82
M	215+87.25	8.88	544.66	544.71
N	215+97.25	8.88	544.58	544.61
℄ Brg. Pier 2	216+07.42	8.88	544.50	544.52
O	216+17.42	8.88	544.44	544.46
P	216+27.42	8.88	544.37	544.41
Q	216+37.42	8.88	544.32	544.37
R	216+47.42	8.88	544.27	544.33
S	216+57.42	8.88	544.23	544.28
T	216+67.42	8.88	544.19	544.24
℄ Brg. E. Abut.	216+77.84	8.88	544.17	544.19
Bk. E. Abut.	216+80.44	8.88	544.16	544.18

Notes:
Stations are measured along ℄ I-70.
Offsets are measured from WB P.G.L.

GIRDER 6

Location	Station	Offset	Theoretical Grade Elevations	Theoretical Grade Elevations Adjusted for Dead Load Deflections and Grinding
Bk. W. Abut.	214+46.35	16.13	546.38	546.40
℄ Brg W. Abut.	214+48.78	16.13	546.34	546.36
A	214+58.78	16.13	546.18	546.22
B	214+68.78	16.13	546.03	546.08
C	214+78.78	16.13	545.87	545.93
D	214+88.78	16.13	545.72	545.77
E	214+98.78	16.13	545.57	545.61
F	215+08.78	16.13	545.42	545.45
℄ Brg. Pier 1	215+19.19	16.13	545.28	545.30
G	215+29.19	16.13	545.15	545.18
H	215+39.19	16.13	545.03	545.07
I	215+49.19	16.13	544.91	544.98
J	215+59.19	16.13	544.80	544.88
K	215+69.19	16.13	544.70	544.77
L	215+79.19	16.13	544.61	544.67
M	215+89.19	16.13	544.52	544.56
N	215+99.19	16.13	544.44	544.47
℄ Brg. Pier 2	216+09.36	16.13	544.36	544.38
O	216+19.36	16.13	544.29	544.32
P	216+29.36	16.13	544.23	544.27
Q	216+39.36	16.13	544.18	544.23
R	216+49.36	16.13	544.13	544.19
S	216+59.36	16.13	544.09	544.15
T	216+69.36	16.13	544.06	544.10
℄ Brg. E. Abut.	216+79.78	16.13	544.03	544.05
Bk. E. Abut.	216+82.38	16.13	544.03	544.05

Notes:
Stations are measured along ℄ I-70.
Offsets are measured from WB P.G.L.

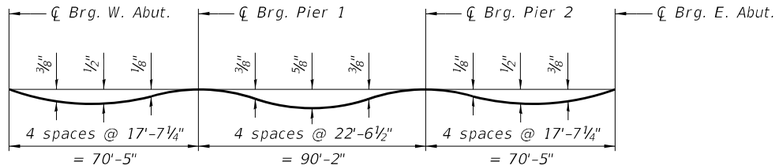

DEAD LOAD DEFLECTION DIAGRAM

(Includes weight of concrete only.)

Note:
The above deflections are not to be used in the field if the engineer is working from the grade elevations adjusted for dead load deflections and grinding as shown on sheets 8 through 10 of 45.

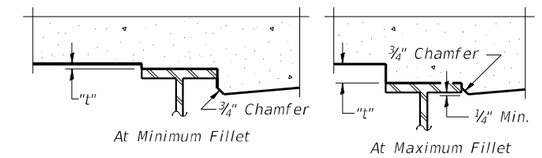

To determine "t": After all structural steel has been erected, elevations of the top flanges of the beams shall be taken at intervals shown below. These elevations subtracted from the "Theoretical Grade Elevations Adjusted for Dead Load Deflection and Grinding" shown on sheets 8 through 10 of 45, minus the initial slab thickness prior to grinding, equals the fillet heights "t" above top flange of beams.

The slab is to be ground after curing to achive smoothness, but the slab is not to be ground to elevations below the "Theoretical Grade Elevations" shown on sheets 8 through 10 of 45. For grinding the deck, see Special Provisions.

FILLET HEIGHTS

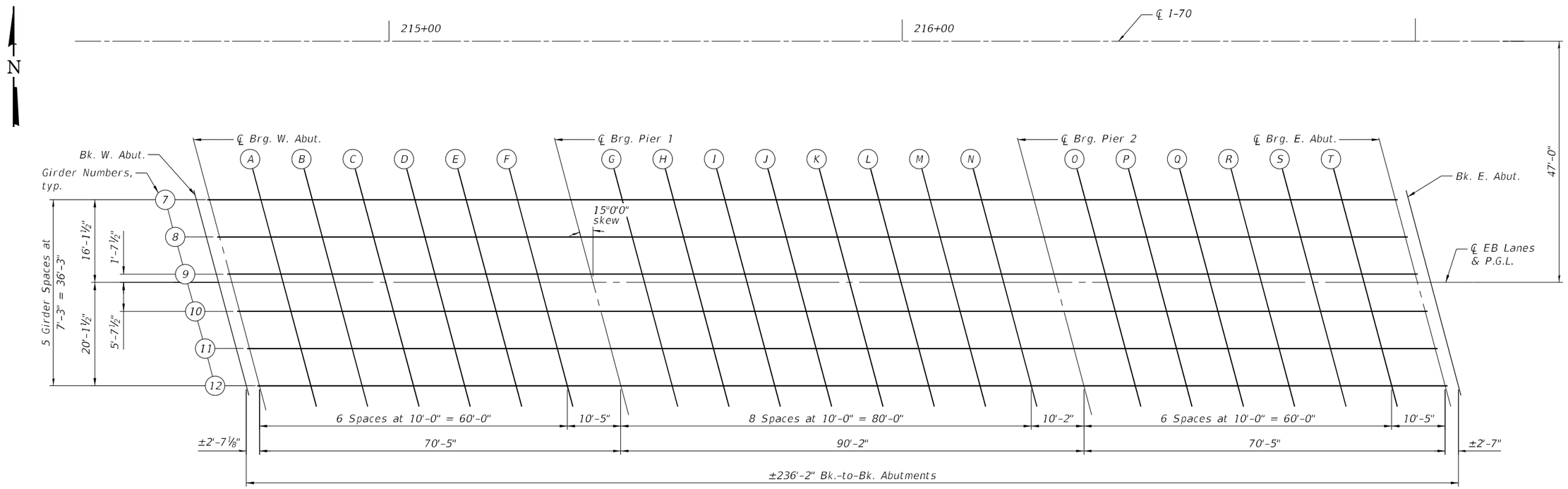

PLAN

MODEL: Default
FILE NAME: S:\2022\22IL010 - PTB 202-35 - D7 - HMG - I-70 Ph. I-H\CADD\CADD Sheets\0120006_0120007-74A01-007-TOS Elev EB.dgn
1/22/2025 10:47:52 AM

QUIGG ENGINEERING INC

USER NAME = JCray	DESIGNED - KFO	REVISED -	
0120006_0120007-74A01-007-TOS Elev EB.dgn	CHECKED - KWB	REVISED -	
PLOT SCALE =	DRAWN - JDC	REVISED -	
PLOT DATE =	CHECKED - RPW	REVISED -	

STATE OF ILLINOIS
DEPARTMENT OF TRANSPORTATION

TOP OF SLAB ELEVATIONS (1 OF 4) (EB)
STRUCTURE NO. 012-0007 (EB)

SHEET 7 OF 45 SHEETS

F.A.I. RTE.	SECTION	COUNTY	TOTAL SHEETS	SHEET NO.
70	(12-53B-1)BR-1	CLARK	93	40
		CONTRACT NO. 74A01		
	ILLINOIS	FED. AID PROJECT		

GIRDER 7

Location	Station	Offset	Theoretical Grade Elevations	Theoretical Grade Elevations Adjusted for Dead Load Deflections and Grinding
Bk. W. Abut.	214+62.83	-16.13	546.12	546.14
℄ Brg W. Abut.	214+65.42	-16.13	546.08	546.10
A	214+75.42	-16.13	545.92	545.97
B	214+85.42	-16.13	545.77	545.82
C	214+95.42	-16.13	545.62	545.67
D	215+05.42	-16.13	545.47	545.52
E	215+15.42	-16.13	545.33	545.37
F	215+25.42	-16.13	545.20	545.23
℄ Brg. Pier 1	215+35.84	-16.13	545.07	545.09
G	215+45.84	-16.13	544.95	544.98
H	215+55.84	-16.13	544.84	544.89
I	215+65.84	-16.13	544.73	544.80
J	215+75.84	-16.13	544.64	544.71
K	215+85.84	-16.13	544.55	544.62
L	215+95.84	-16.13	544.46	544.53
M	216+05.84	-16.13	544.39	544.43
N	216+15.84	-16.13	544.32	544.35
℄ Brg. Pier 2	216+26.01	-16.13	544.25	544.27
O	216+36.01	-16.13	544.20	544.22
P	216+46.01	-16.13	544.15	544.19
Q	216+56.01	-16.13	544.10	544.16
R	216+66.01	-16.13	544.07	544.13
S	216+76.01	-16.13	544.04	544.10
T	216+86.01	-16.13	544.02	544.06
℄ Brg. E. Abut.	216+96.42	-16.13	544.00	544.03
Bk. E. Abut.	216+99.00	-16.13	544.00	544.02

GIRDER 8

Location	Station	Offset	Theoretical Grade Elevations	Theoretical Grade Elevations Adjusted for Dead Load Deflections and Grinding
Bk. W. Abut.	214+64.77	-8.88	546.22	546.24
℄ Brg W. Abut.	214+67.36	-8.88	546.18	546.20
A	214+77.36	-8.88	546.02	546.07
B	214+87.36	-8.88	545.87	545.92
C	214+97.36	-8.88	545.72	545.78
D	215+07.36	-8.88	545.57	545.63
E	215+17.36	-8.88	545.43	545.48
F	215+27.36	-8.88	545.30	545.33
℄ Brg. Pier 1	215+37.78	-8.88	545.17	545.20
G	215+47.78	-8.88	545.06	545.09
H	215+57.78	-8.88	544.95	545.00
I	215+67.78	-8.88	544.84	544.91
J	215+77.78	-8.88	544.75	544.82
K	215+87.78	-8.88	544.66	544.73
L	215+97.78	-8.88	544.58	544.64
M	216+07.78	-8.88	544.50	544.55
N	216+17.78	-8.88	544.43	544.46
℄ Brg. Pier 2	216+27.95	-8.88	544.37	544.39
O	216+37.95	-8.88	544.32	544.34
P	216+47.95	-8.88	544.27	544.31
Q	216+57.95	-8.88	544.23	544.28
R	216+67.95	-8.88	544.19	544.25
S	216+77.95	-8.88	544.17	544.22
T	216+87.95	-8.88	544.15	544.19
℄ Brg. E. Abut.	216+98.37	-8.88	544.13	544.15
Bk. E. Abut.	217+00.94	-8.88	544.13	544.15

GIRDER 9

Location	Station	Offset	Theoretical Grade Elevations	Theoretical Grade Elevations Adjusted for Dead Load Deflections and Grinding
Bk. W. Abut.	214+66.71	-1.63	546.30	546.32
℄ Brg W. Abut.	214+69.30	-1.63	546.26	546.28
A	214+79.30	-1.63	546.10	546.14
B	214+89.30	-1.63	545.95	546.00
C	214+99.30	-1.63	545.80	545.86
D	215+09.30	-1.63	545.65	545.71
E	215+19.30	-1.63	545.52	545.56
F	215+29.30	-1.63	545.39	545.41
℄ Brg. Pier 1	215+39.72	-1.63	545.26	545.28
G	215+49.72	-1.63	545.14	545.17
H	215+59.72	-1.63	545.04	545.08
I	215+69.72	-1.63	544.93	545.00
J	215+79.72	-1.63	544.84	544.91
K	215+89.72	-1.63	544.75	544.83
L	215+99.72	-1.63	544.67	544.73
M	216+09.72	-1.63	544.60	544.64
N	216+19.72	-1.63	544.53	544.56
℄ Brg. Pier 2	216+29.89	-1.63	544.47	544.49
O	216+39.89	-1.63	544.41	544.44
P	216+49.89	-1.63	544.37	544.41
Q	216+59.89	-1.63	544.33	544.38
R	216+69.89	-1.63	544.30	544.36
S	216+79.89	-1.63	544.27	544.33
T	216+89.89	-1.63	544.25	544.29
℄ Brg. E. Abut.	217+00.31	-1.63	544.24	544.26
Bk. E. Abut.	217+02.88	-1.63	544.24	544.26

Notes:
Stations are measured along ℄ I-70.
Offsets are measured from EB P.G.L.

℄ EB LANES & P.G.L.

Location	Station	Offset	Theoretical Grade Elevations	Theoretical Grade Elevations Adjusted for Dead Load Deflections and Grinding
Bk. W. Abut.	214+67.15	0.00	546.32	546.34
℄ Brg W. Abut.	214+69.74	0.00	546.28	546.30
A	214+79.74	0.00	546.12	546.16
B	214+89.74	0.00	545.97	546.02
C	214+99.74	0.00	545.82	545.87
D	215+09.74	0.00	545.67	545.73
E	215+19.74	0.00	545.54	545.58
F	215+29.74	0.00	545.41	545.43
℄ Brg. Pier 1	215+40.16	0.00	545.28	545.30
G	215+50.16	0.00	545.16	545.19
H	215+60.16	0.00	545.06	545.10
I	215+70.16	0.00	544.95	545.02
J	215+80.16	0.00	544.86	544.93
K	215+90.16	0.00	544.77	544.85
L	216+00.16	0.00	544.69	544.76
M	216+10.16	0.00	544.62	544.67
N	216+20.16	0.00	544.55	544.58
℄ Brg. Pier 2	216+30.33	0.00	544.49	544.51
O	216+40.33	0.00	544.44	544.46
P	216+50.33	0.00	544.39	544.43
Q	216+60.33	0.00	544.35	544.40
R	216+70.33	0.00	544.32	544.38
S	216+80.33	0.00	544.29	544.35
T	216+90.33	0.00	544.27	544.32
℄ Brg. E. Abut.	217+00.74	0.00	544.26	544.28
Bk. E. Abut.	217+03.32	0.00	544.26	544.28

GIRDER 10

Location	Station	Offset	Theoretical Grade Elevations	Theoretical Grade Elevations Adjusted for Dead Load Deflections and Grinding
Bk. W. Abut.	214+68.66	5.63	546.21	546.23
℄ Brg W. Abut.	214+71.25	5.63	546.17	546.19
A	214+81.25	5.63	546.01	546.05
B	214+91.25	5.63	545.86	545.91
C	215+01.25	5.63	545.71	545.77
D	215+11.25	5.63	545.57	545.62
E	215+21.25	5.63	545.43	545.47
F	215+31.25	5.63	545.30	545.33
℄ Brg. Pier 1	215+41.67	5.63	545.18	545.20
G	215+51.67	5.63	545.06	545.09
H	215+61.67	5.63	544.96	545.00
I	215+71.67	5.63	544.86	544.92
J	215+81.67	5.63	544.76	544.84
K	215+91.67	5.63	544.68	544.75
L	216+01.67	5.63	544.60	544.66
M	216+11.67	5.63	544.52	544.57
N	216+21.67	5.63	544.46	544.49
℄ Brg. Pier 2	216+31.83	5.63	544.40	544.42
O	216+41.83	5.63	544.34	544.37
P	216+51.83	5.63	544.30	544.34
Q	216+61.83	5.63	544.26	544.31
R	216+71.83	5.63	544.23	544.29
S	216+81.83	5.63	544.21	544.26
T	216+91.83	5.63	544.19	544.23
℄ Brg. E. Abut.	217+02.25	5.63	544.18	544.20
Bk. E. Abut.	217+04.83	5.63	544.18	544.20

GIRDER 11

Location	Station	Offset	Theoretical Grade Elevations	Theoretical Grade Elevations Adjusted for Dead Load Deflections and Grinding
Bk. W. Abut.	214+70.60	12.88	546.06	546.09
℄ Brg W. Abut.	214+73.19	12.88	546.02	546.05
A	214+83.19	12.88	545.87	545.91
B	214+93.19	12.88	545.72	545.77
C	215+03.19	12.88	545.57	545.63
D	215+13.19	12.88	545.43	545.48
E	215+23.19	12.88	545.29	545.33
F	215+33.19	12.88	545.17	545.19
℄ Brg. Pier 1	215+43.61	12.88	545.04	545.06
G	215+53.61	12.88	544.93	544.96
H	215+63.61	12.88	544.82	544.87
I	215+73.61	12.88	544.72	544.79
J	215+83.61	12.88	544.63	544.71
K	215+93.61	12.88	544.55	544.62
L	216+03.61	12.88	544.47	544.53
M	216+13.61	12.88	544.40	544.44
N	216+23.61	12.88	544.33	544.36
℄ Brg. Pier 2	216+33.78	12.88	544.27	544.29
O	216+43.78	12.88	544.22	544.25
P	216+53.78	12.88	544.18	544.22
Q	216+63.78	12.88	544.14	544.19
R	216+73.78	12.88	544.11	544.17
S	216+83.78	12.88	544.09	544.14
T	216+93.78	12.88	544.07	544.11
℄ Brg. E. Abut.	217+04.19	12.88	544.06	544.08
Bk. E. Abut.	217+06.77	12.88	544.06	544.08

Notes:
Stations are measured along ℄ I-70.
Offsets are measured from EB P.G.L.

GIRDER 12

Location	Station	Offset	Theoretical Grade Elevations	Theoretical Grade Elevations Adjusted for Dead Load Deflections and Grinding
Bk. W. Abut.	214+72.54	20.13	545.89	545.91
℄ Brg W. Abut.	214+75.13	20.13	545.85	545.87
A	214+85.13	20.13	545.69	545.73
B	214+95.13	20.13	545.54	545.60
C	215+05.13	20.13	545.39	545.45
D	215+15.13	20.13	545.26	545.31
E	215+25.13	20.13	545.12	545.16
F	215+35.13	20.13	545.00	545.02
℄ Brg. Pier 1	215+45.55	20.13	544.87	544.89
G	215+55.55	20.13	544.76	544.79
H	215+65.55	20.13	544.66	544.70
I	215+75.55	20.13	544.56	544.62
J	215+85.55	20.13	544.47	544.54
K	215+95.55	20.13	544.39	544.46
L	216+05.55	20.13	544.31	544.37
M	216+15.55	20.13	544.24	544.28
N	216+25.55	20.13	544.17	544.20
℄ Brg. Pier 2	216+35.72	20.13	544.12	544.14
O	216+45.72	20.13	544.07	544.09
P	216+55.72	20.13	544.03	544.06
Q	216+65.72	20.13	543.99	544.04
R	216+75.72	20.13	543.96	544.02
S	216+85.72	20.13	543.94	543.99
T	216+95.72	20.13	543.92	543.97
℄ Brg. E. Abut.	217+06.14	20.13	543.92	543.94
Bk. E. Abut.	217+08.71	20.13	543.92	543.94

Notes:
Stations are measured along ℄ I-70.
Offsets are measured from EB P.G.L.

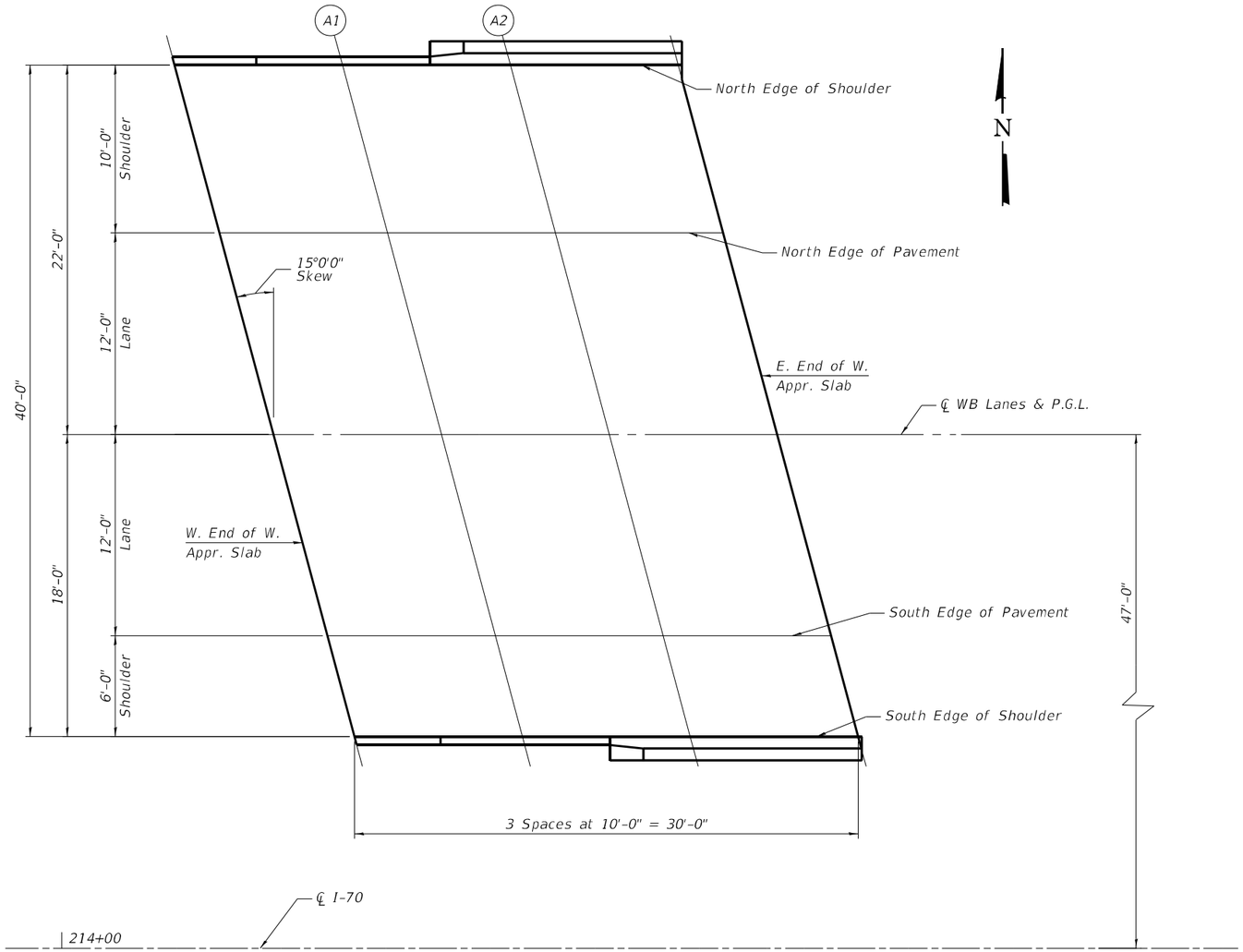

PLAN - WESTBOUND WEST APPROACH SLAB

NORTH EDGE OF SHOULDER

Location	Station	Offset	Theoretical Grade Elevations	Theoretical Grade Elevations Adjusted For Grinding
W. End of W. Appr. Slab	214+07.17	-22.00	546.87	546.89
A1	214+17.17	-22.00	546.71	546.73
A2	214+27.17	-22.00	546.56	546.58
E. End of W. Appr. Slab	214+37.17	-22.00	546.40	546.42

NORTH EDGE OF PAVEMENT

Location	Station	Offset	Theoretical Grade Elevations	Theoretical Grade Elevations Adjusted For Grinding
W. End of W. Appr. Slab	214+09.85	-12.00	547.02	547.04
A1	214+19.85	-12.00	546.87	546.89
A2	214+29.85	-12.00	546.71	546.73
E. End of W. Appr. Slab	214+39.85	-12.00	546.56	546.58

℄ WB LANES & P.G.L.

Location	Station	Offset	Theoretical Grade Elevations	Theoretical Grade Elevations Adjusted For Grinding
W. End of W. Appr. Slab	214+13.07	0.00	547.15	547.17
A1	214+23.07	0.00	547.00	547.02
A2	214+33.07	0.00	546.84	546.86
E. End of W. Appr. Slab	214+43.07	0.00	546.69	546.71

SOUTH EDGE OF PAVEMENT

Location	Station	Offset	Theoretical Grade Elevations	Theoretical Grade Elevations Adjusted For Grinding
W. End of W. Appr. Slab	214+16.28	12.00	546.92	546.94
A1	214+26.28	12.00	546.77	546.79
A2	214+36.28	12.00	546.61	546.63
E. End of W. Appr. Slab	214+46.28	12.00	546.46	546.48

SOUTH EDGE OF SHOULDER

Location	Station	Offset	Theoretical Grade Elevations	Theoretical Grade Elevations Adjusted For Grinding
W. End of W. Appr. Slab	214+17.89	18.00	546.78	546.80
A1	214+27.89	18.00	546.62	546.64
A2	214+37.89	18.00	546.47	546.49
E. End of W. Appr. Slab	214+47.89	18.00	546.31	546.33

Notes:
Stations are measured along ℄ I-70.
Offsets are measured from WB P.G.L.

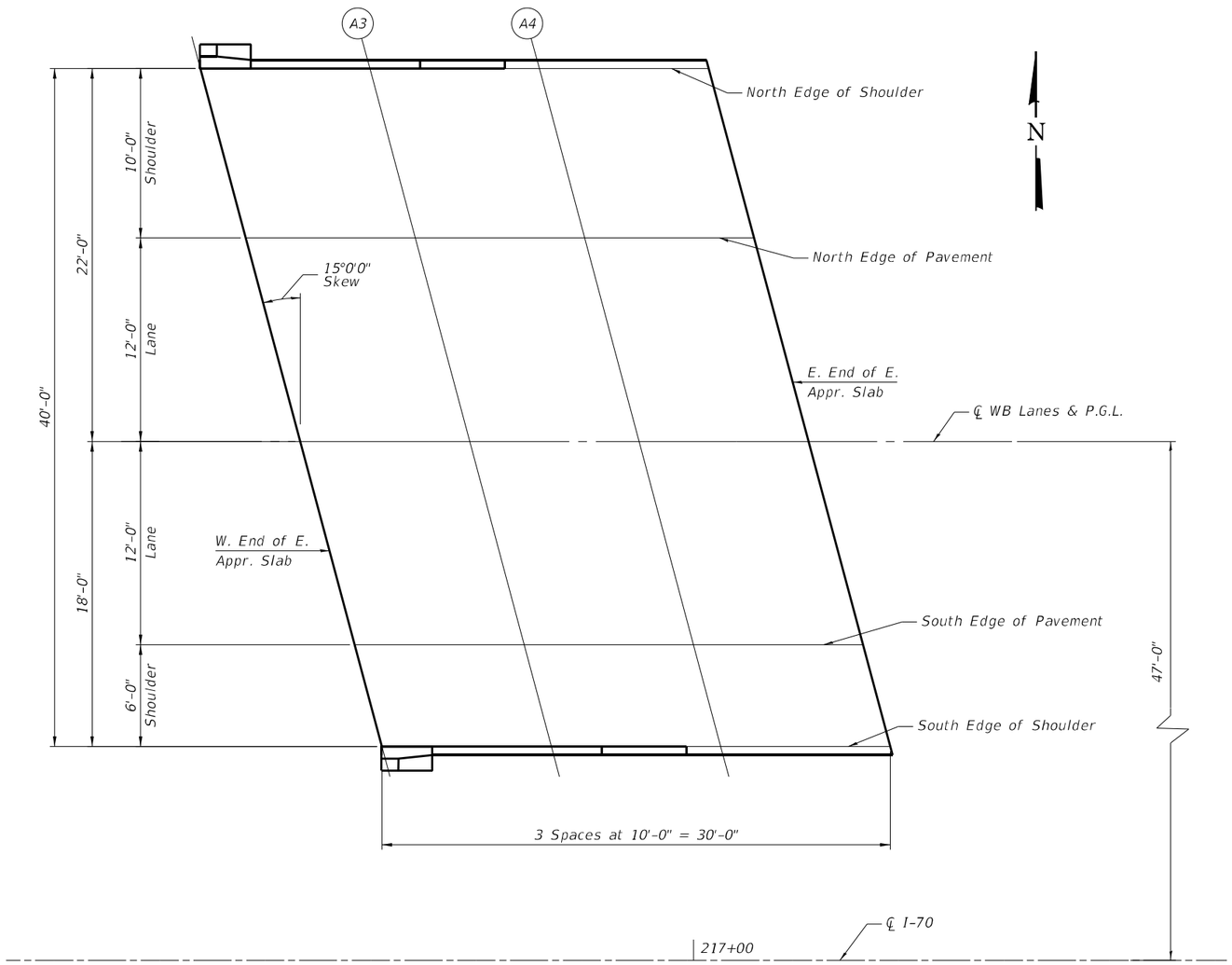

PLAN - WESTBOUND EAST APPROACH SLAB

Notes:
Stations are measured along ℄ I-70.
Offsets are measured from WB P.G.L.

NORTH EDGE OF SHOULDER

Location	Station	Offset	Theoretical Grade Elevations	Theoretical Grade Elevations Adjusted For Grinding
W. End of E. Appr. Slab	216+71.13	-22.00	543.94	543.96
A3	216+81.13	-22.00	543.91	543.93
A4	216+91.13	-22.00	543.89	543.91
E. End of E. Appr. Slab	217+01.13	-22.00	543.88	543.90

NORTH EDGE OF PAVEMENT

Location	Station	Offset	Theoretical Grade Elevations	Theoretical Grade Elevations Adjusted For Grinding
W. End of E. Appr. Slab	216+73.81	-12.00	544.13	544.15
A3	216+83.81	-12.00	544.11	544.13
A4	216+93.81	-12.00	544.09	544.11
E. End of E. Appr. Slab	217+03.81	-12.00	544.08	544.10

℄ WB LANES & P.G.L.

Location	Station	Offset	Theoretical Grade Elevations	Theoretical Grade Elevations Adjusted For Grinding
W. End of E. Appr. Slab	216+77.02	0.00	544.30	544.32
A3	216+87.02	0.00	544.28	544.30
A4	216+97.02	0.00	544.27	544.29
E. End of E. Appr. Slab	217+07.02	0.00	544.26	544.28

SOUTH EDGE OF PAVEMENT

Location	Station	Offset	Theoretical Grade Elevations	Theoretical Grade Elevations Adjusted For Grinding
W. End of E. Appr. Slab	216+80.24	12.00	544.11	544.13
A3	216+90.24	12.00	544.09	544.11
A4	217+00.24	12.00	544.08	544.10
E. End of E. Appr. Slab	217+10.24	12.00	544.08	544.10

SOUTH EDGE OF SHOULDER

Location	Station	Offset	Theoretical Grade Elevations	Theoretical Grade Elevations Adjusted For Grinding
W. End of E. Appr. Slab	216+81.85	18.00	543.99	544.01
A3	216+91.85	18.00	543.97	543.99
A4	217+01.85	18.00	543.96	543.98
E. End of E. Appr. Slab	217+11.85	18.00	543.96	543.98

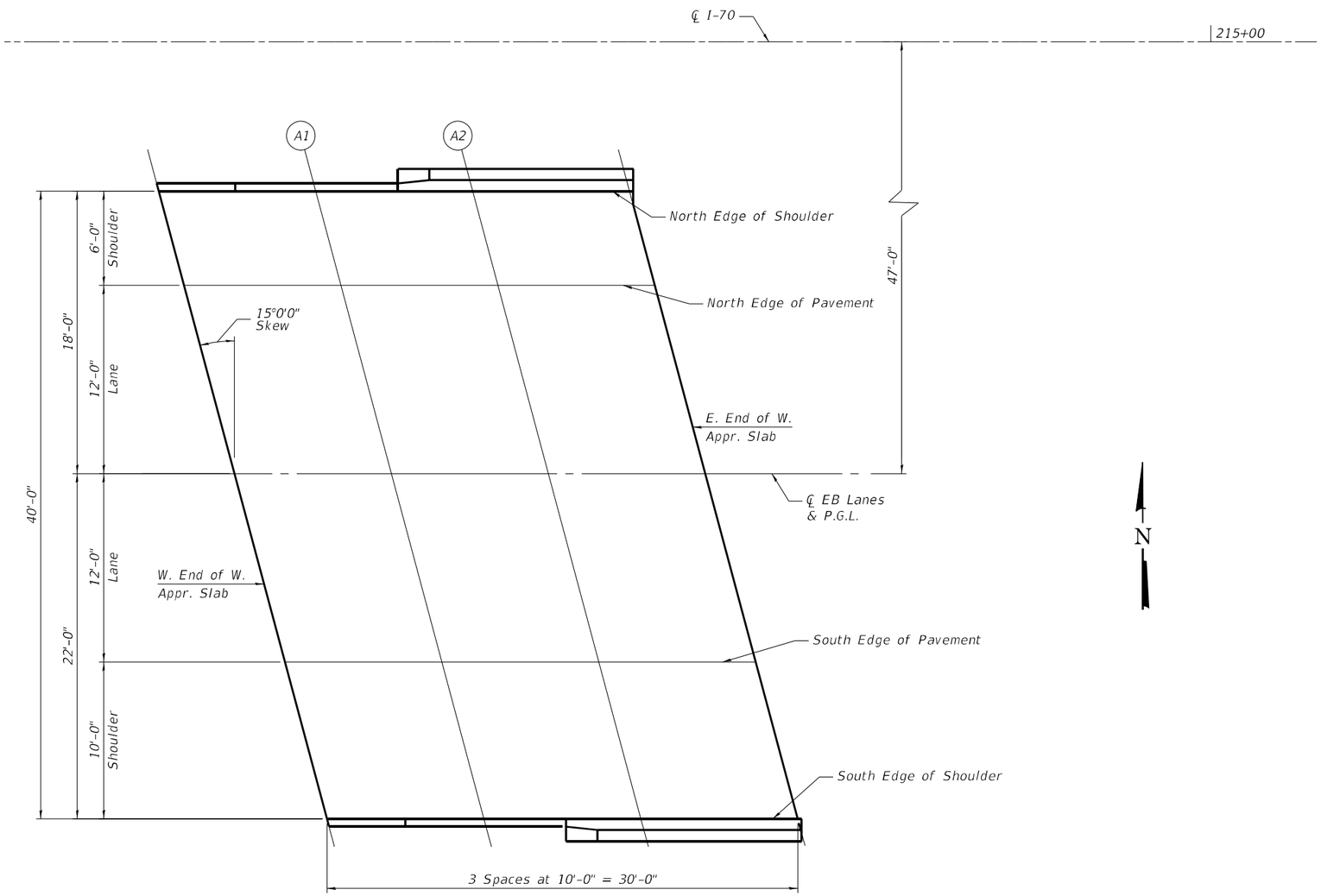

PLAN - EASTBOUND WEST APPROACH SLAB

Notes:
Stations are measured along ℄ I-70.
Offsets are measured from EB P.G.L.

NORTH EDGE OF SHOULDER

Location	Station	Offset	Theoretical Grade Elevations	Theoretical Grade Elevations Adjusted For Grinding
W. End of W. Appr. Slab	214+33.36	-18.00	546.54	546.56
A1	214+43.36	-18.00	546.38	546.40
A2	214+53.36	-18.00	546.23	546.25
E. End of W. Appr. Slab	214+63.36	-18.00	546.07	546.09

NORTH EDGE OF PAVEMENT

Location	Station	Offset	Theoretical Grade Elevations	Theoretical Grade Elevations Adjusted For Grinding
W. End of W. Appr. Slab	214+34.97	-12.00	546.63	546.65
A1	214+44.97	-12.00	546.48	546.50
A2	214+54.97	-12.00	546.32	546.34
E. End of W. Appr. Slab	214+64.97	-12.00	546.17	546.19

℄ EB LANES & P.G.L.

Location	Station	Offset	Theoretical Grade Elevations	Theoretical Grade Elevations Adjusted For Grinding
W. End of W. Appr. Slab	214+38.19	0.00	546.76	546.78
A1	214+48.19	0.00	546.61	546.63
A2	214+58.19	0.00	546.45	546.47
E. End of W. Appr. Slab	214+68.19	0.00	546.30	546.32

SOUTH EDGE OF PAVEMENT

Location	Station	Offset	Theoretical Grade Elevations	Theoretical Grade Elevations Adjusted For Grinding
W. End of W. Appr. Slab	214+41.40	12.00	546.53	546.55
A1	214+51.40	12.00	546.38	546.40
A2	214+61.40	12.00	546.22	546.24
E. End of W. Appr. Slab	214+71.40	12.00	546.07	546.09

SOUTH EDGE OF SHOULDER

Location	Station	Offset	Theoretical Grade Elevations	Theoretical Grade Elevations Adjusted For Grinding
W. End of W. Appr. Slab	214+44.08	22.00	546.29	546.31
A1	214+54.08	22.00	546.14	546.16
A2	214+64.08	22.00	545.98	546.00
E. End of W. Appr. Slab	214+74.08	22.00	545.83	545.85

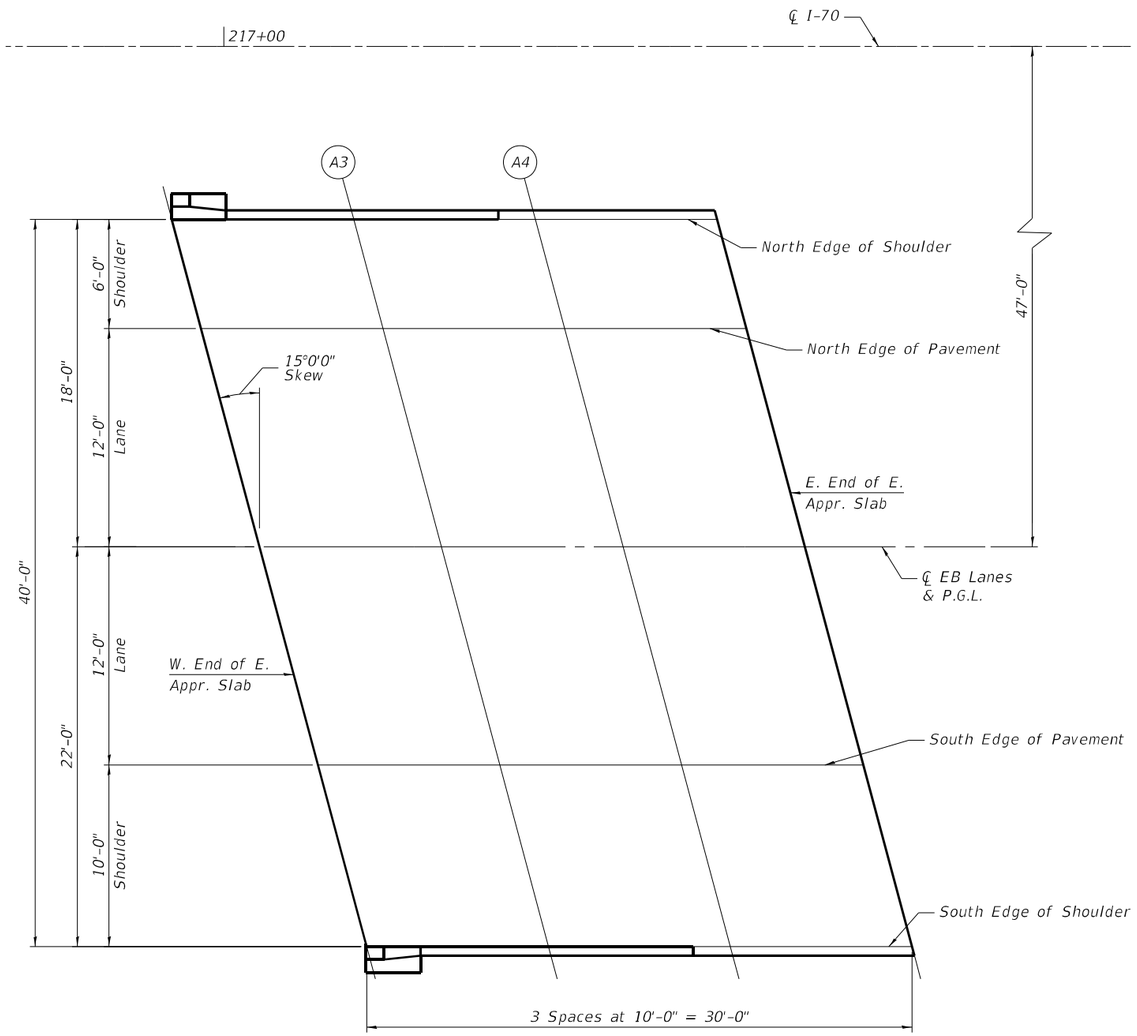

PLAN - EASTBOUND EAST APPROACH SLAB

N

Notes:
Stations are measured along ℄ I-70.
Offsets are measured from EB P.G.L.

NORTH EDGE OF SHOULDER

Location	Station	Offset	Theoretical Grade Elevations	Theoretical Grade Elevations Adjusted For Grinding
W. End of E. Appr. Slab	216+97.46	-18.00	543.97	543.99
A3	217+07.46	-18.00	543.96	543.98
A4	217+17.46	-18.00	543.96	543.98
E. End of E. Appr. Slab	217+27.46	-18.00	543.97	543.99

NORTH EDGE OF PAVEMENT

Location	Station	Offset	Theoretical Grade Elevations	Theoretical Grade Elevations Adjusted For Grinding
W. End of E. Appr. Slab	216+99.07	-12.00	544.08	544.10
A3	217+09.07	-12.00	544.08	544.10
A4	217+19.07	-12.00	544.08	544.10
E. End of E. Appr. Slab	217+29.07	-12.00	544.09	544.11

℄ EB LANES & P.G.L.

Location	Station	Offset	Theoretical Grade Elevations	Theoretical Grade Elevations Adjusted For Grinding
W. End of E. Appr. Slab	217+02.28	0.00	544.26	544.28
A3	217+12.28	0.00	544.26	544.28
A4	217+22.28	0.00	544.26	544.28
E. End of E. Appr. Slab	217+32.28	0.00	544.27	544.29

SOUTH EDGE OF PAVEMENT

Location	Station	Offset	Theoretical Grade Elevations	Theoretical Grade Elevations Adjusted For Grinding
W. End of E. Appr. Slab	217+05.50	12.00	544.08	544.10
A3	217+15.50	12.00	544.08	544.10
A4	217+25.50	12.00	544.08	544.10
E. End of E. Appr. Slab	217+35.50	12.00	544.10	544.12

SOUTH EDGE OF SHOULDER

Location	Station	Offset	Theoretical Grade Elevations	Theoretical Grade Elevations Adjusted For Grinding
W. End of E. Appr. Slab	217+08.18	22.00	543.88	543.90
A3	217+18.18	22.00	543.88	543.90
A4	217+28.18	22.00	543.89	543.91
E. End of E. Appr. Slab	217+38.18	22.00	543.90	543.92

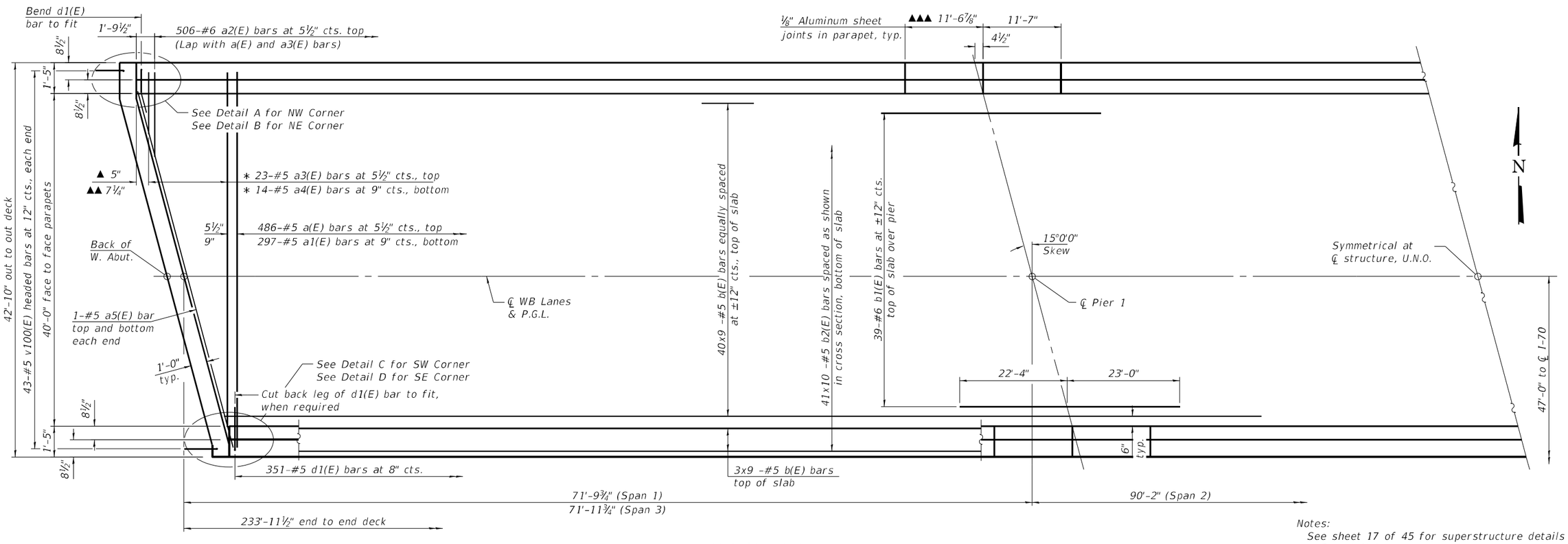

PARTIAL PLAN

▲ 7½" at Southeast corner.
▲▲ 9¾" at Southeast corner.
▲▲▲ 11'-7¼" at Parapets in Span 3.

∗ See Field Cutting Diagram on sheet 17 of 45.
∗∗ Prior to grinding.

Notes:
See sheet 17 of 45 for superstructure details and Bill of Material.
Bars indicated thus 20 x 3-#5 etc. indicates 20 lines of bars with 3 lengths per line.
See sheet 16 of 45 for parapet reinforcement.
For scupper locations see sheet 1 of 45.
For Details A, B, C, and D see sheet 16 of 45.

MINIMUM BAR LAP

#5 bar = 3'-6"

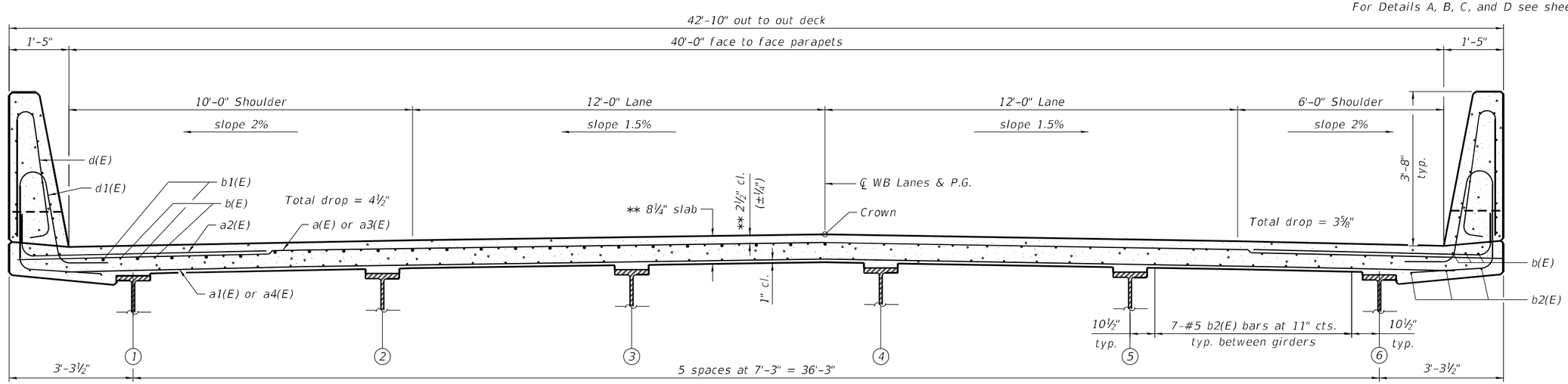

CROSS SECTION

(Looking East)

QUIGG ENGINEERING INC	USER NAME = JCray	DESIGNED - KFO	REVISED -
	0120006_0120007-74A01-015-Super. (WB).dgn	CHECKED - KWB	REVISED -
	PLOT SCALE =	DRAWN - JDC	REVISED -
	PLOT DATE =	CHECKED - RPW	REVISED -

STATE OF ILLINOIS
DEPARTMENT OF TRANSPORTATION

SUPERSTRUCTURE (WB)
STRUCTURE NO. 012-0006 (WB)

SHEET 15 OF 45 SHEETS

F.A.I. RTE.	SECTION	COUNTY	TOTAL SHEETS	SHEET NO.
70	(12-53B-1)BR-1	CLARK	93	48
		CONTRACT NO. 74A01		
		ILLINOIS	FED. AID PROJECT	

MODEL: Default
FILE NAME: S:\2022\22IL010 - PTB 202-35 - D7 - HMG - I-70 Ph I-H\CADD\CADD Sheets\0120006_0120007-74A01-015-Super. (WB).dgn
1/22/2025 10:49:00 AM

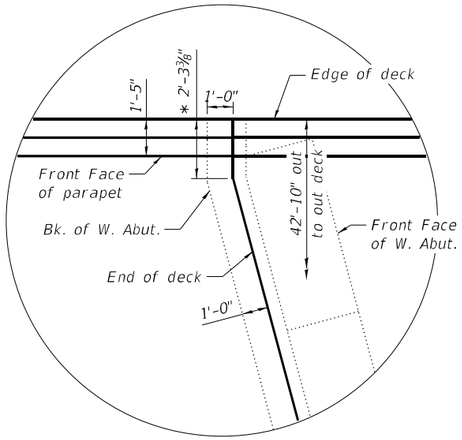

DETAIL A

(Reinforcement not shown for clarity)

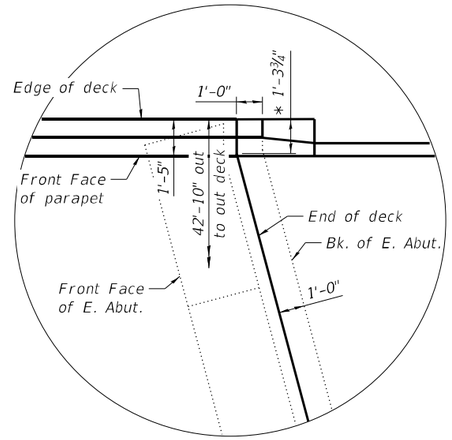

DETAIL B

(Reinforcement not shown for clarity)

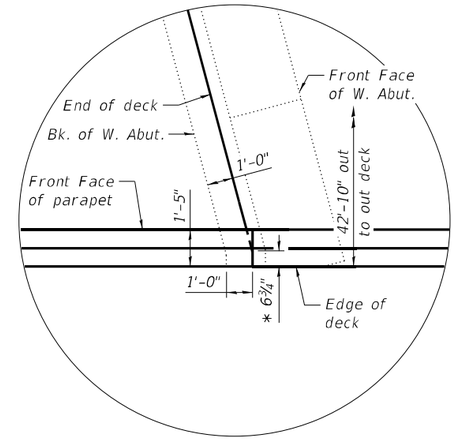

DETAIL C

(Reinforcement not shown for clarity)

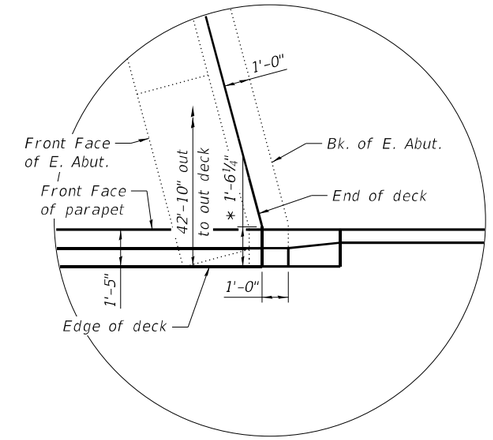

DETAIL D

(Reinforcement not shown for clarity)

* Distance to the bend in the deck.

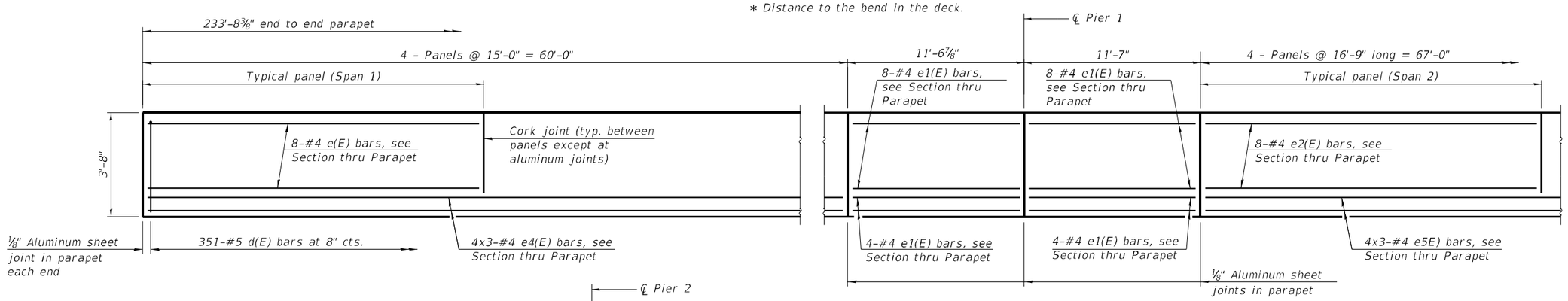

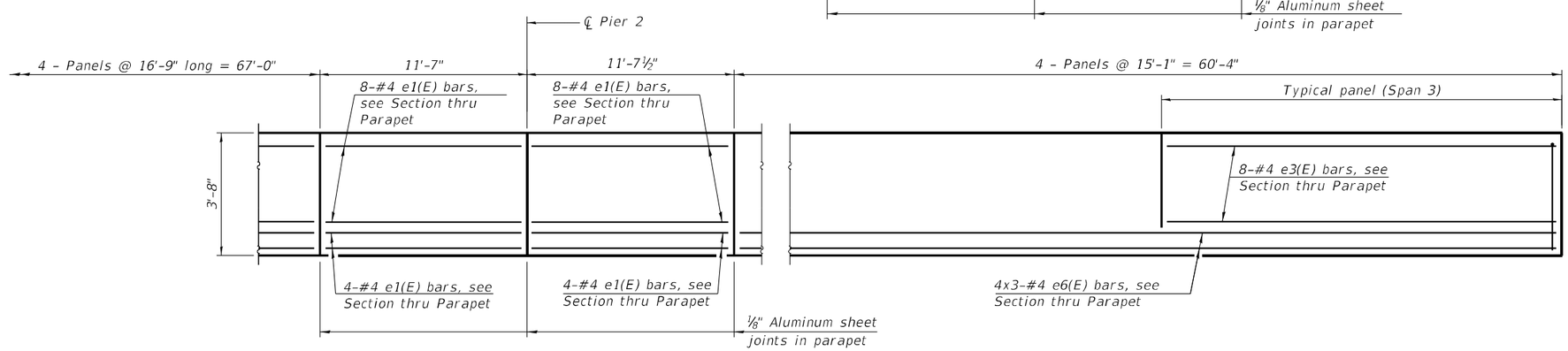

INSIDE ELEVATION PARAPET

MINIMUM BAR LAP

#4 bar = 2'-5"

Note:
See sheet 17 of 45 for additional superstructure details and Bill of Material.
Bars indicated thus 4x3-#4 etc. indicates 4 line of bars with 3 lengths per line.

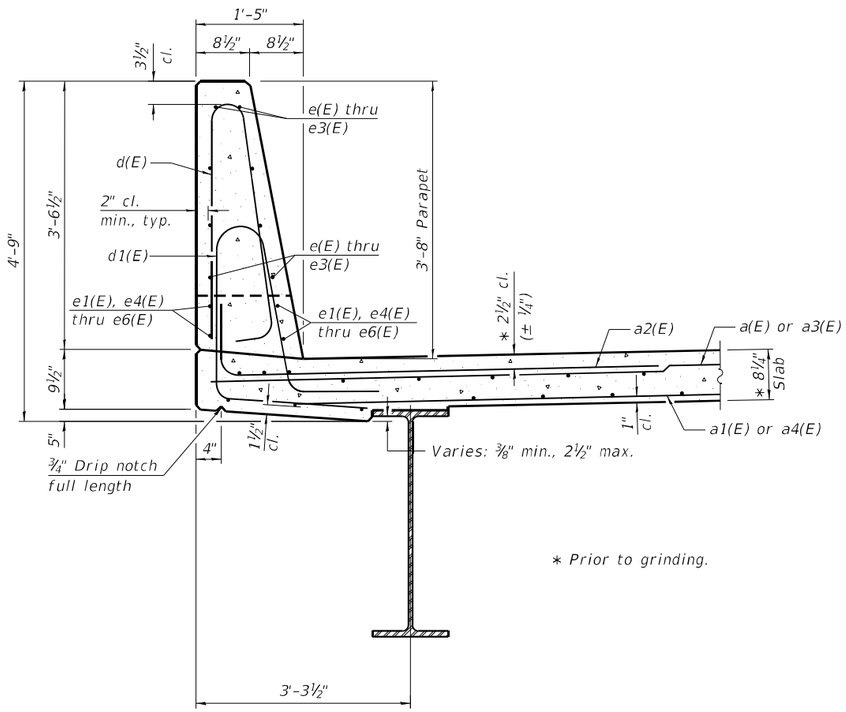

* Prior to grinding.

SECTION THRU PARAPET

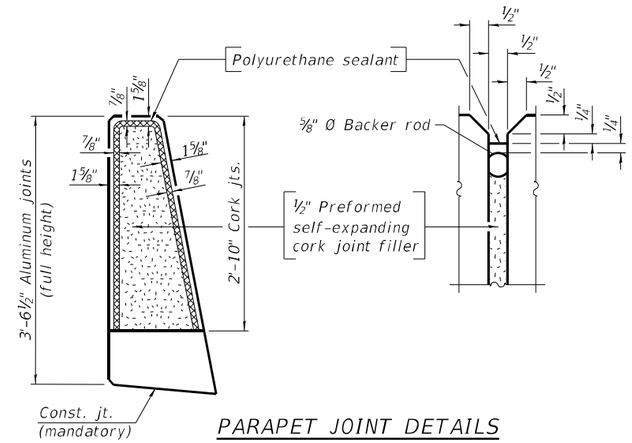

PARAPET JOINT DETAILS

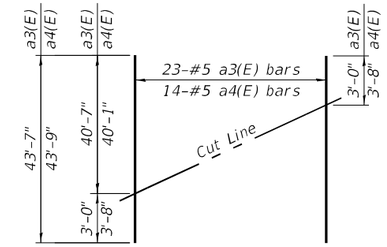

FIELD CUTTING DIAGRAM

Order a3(E) and a4(E) bars full length. Cut as shown and use remainder of bars in opposite end of deck.

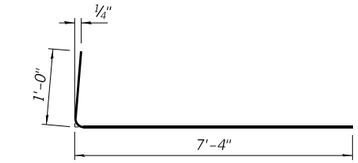

BAR a2(E)

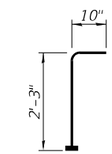

BAR v100(E)
(Headed)
(86-#5 Bar Terminators)

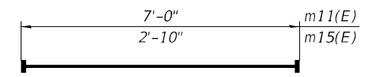

BAR m11(E) & m15(E)
(Headed)
(m11(E) - 40-#6 Bar Terminators)
(m15(E) - 16-#6 Bar Terminators)

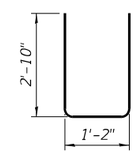

BAR u10(E)

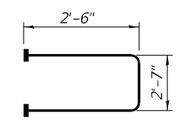

BAR s10(E)
(Headed)
(144-#5 Bar Terminators)

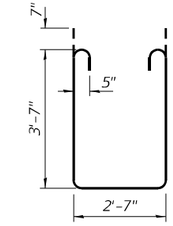

BAR s11(E)

WB SUPERSTRUCTURE BILL OF MATERIAL

Bar	No.	Size	Length	Shape
a(E)	486	#5	42'-6"	
a1(E)	297	#5	40'-6"	
a2(E)	1,012	#6	8'-4"	
a3(E)	23	#5	43'-7"	
a4(E)	14	#5	43'-9"	
a5(E)	4	#5	41'-10"	
a6(E)	48	#5	2'-0"	
b(E)	414	#5	29'-2"	
b1(E)	78	#6	45'-4"	
b2(E)	410	#5	26'-7"	
d(E)	702	#5	7'-0"	
d1(E)	702	#5	8'-5"	
e(E)	64	#4	14'-8"	
e1(E)	96	#4	11'-3"	
e2(E)	64	#4	16'-5"	
e3(E)	64	#4	14'-9"	
e4(E)	24	#4	21'-6"	
e5(E)	24	#4	23'-10"	
e6(E)	24	#4	21'-8"	
m10(E)	10	#6	44'-0"	
m11(E)	20	#6	7'-0"	
m12(E)	20	#6	7'-0"	
m13(E)	4	#4	44'-0"	
m14(E)	8	#6	2'-10"	
m15(E)	8	#6	2'-10"	
s10(E)	72	#5	7'-7"	
s11(E)	72	#5	10'-11"	
u10(E)	86	#5	6'-10"	
v100(E)	86	#5	3'-1"	
Reinforcement Bars, Epoxy Coated			Pound	96,580
Concrete Superstructure			Cu. Yds.	408.2

Bars indicated thus 1 x 2-#4 etc. indicates 1 line of bars with 2 lengths per line.

Notes:

The ⅛" Aluminum sheet shall be ASTM B 209 alloy 3003-H14 and coated to minimize reaction with wet concrete. Cost included with Concrete Superstructure.

The Polyurethane Sealant shall be according to Article 1050.04 of the Std. Spec. and the color shall be gray.

Bar terminators paid for separately. See Total Bill of Material.

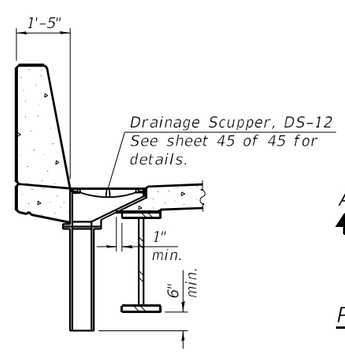

SECTION A-A

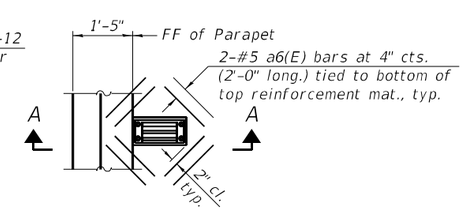

PLAN AT DS-12 SCUPPER

Note:

Cut longitudinal reinforcement to clear drainage scuppers.

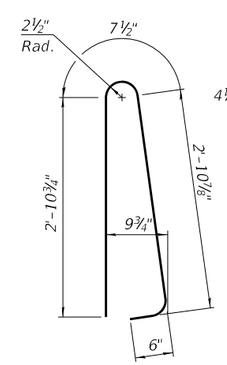

BAR d(E)

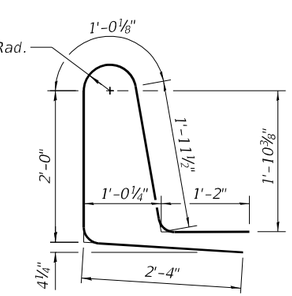

BAR d1(E)

MODEL: Default
FILE NAME: S:\2022\22IL010 - PTB 202-35 - D7 - HMG - I-70 Ph. I-H\CADD\CADD Sheets\0120006_0120007-74A01-017-S_Details (WB).dgn
1/22/2025 10:49:18 AM

QUIGG ENGINEERING INC

USER NAME = JCray	DESIGNED - KFO	REVISED -	
0120006_0120007-74A01-017-S_Details (WB).dgn	CHECKED - KWB	REVISED -	
PLOT SCALE =	DRAWN - JDC	REVISED -	
PLOT DATE =	CHECKED - RPW	REVISED -	

STATE OF ILLINOIS
DEPARTMENT OF TRANSPORTATION

SUPERSTRUCTURE DETAILS (2 OF 2) (WB)
STRUCTURE NO. 012-0006 (WB)

SHEET 17 OF 45 SHEETS

F.A.I. RTE.	SECTION	COUNTY	TOTAL SHEETS	SHEET NO.
70	(12-53B-1)BR-1	CLARK	93	50
		CONTRACT NO. 74A01		
		ILLINOIS	FED. AID PROJECT	

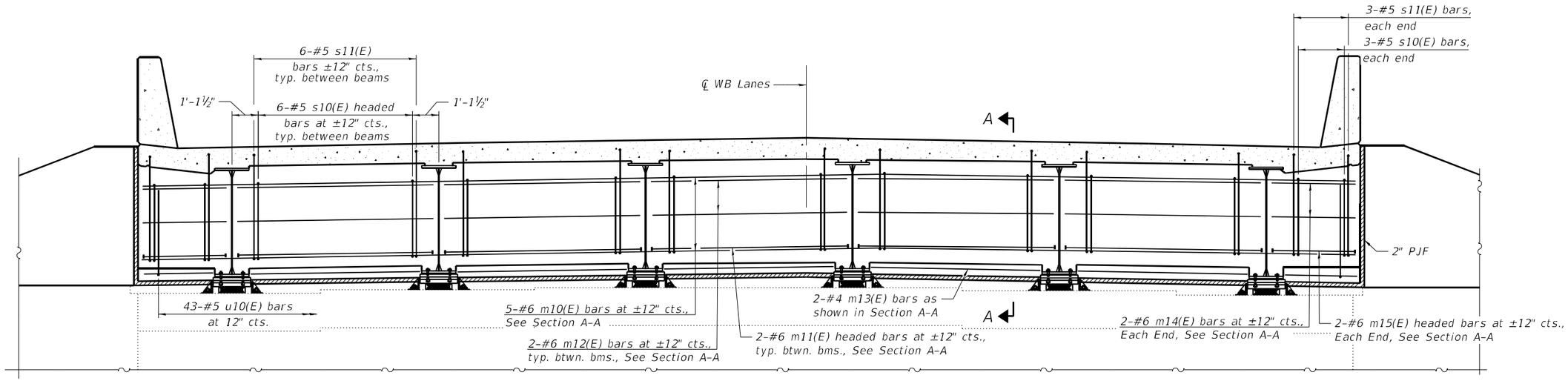

DIAPHRAGM AT ABUTMENT

Looking East (East Abutment Shown, West Abutment Similar)

* Prior to grinding.
** Remove and replace existing PJF.
*** See Top of Slab Elevations Tables for exact Stations and Offsets of ℄ Bearing of each girder. The surveyed distance from the back of the abutment to the proposed centerline of bearing varies due to the adjustment of the alignment to be parallel to the interstate.

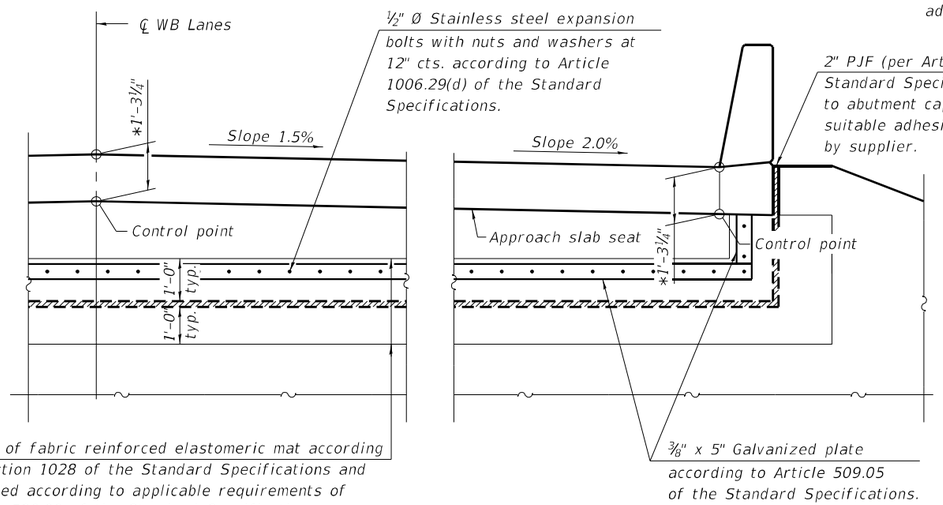

VIEW B-B

(Showing 2" PJF and limits of Fabric Reinforced Elastomeric Mat.
See Section Thru Semi-Integral Abutment on Sheet 2 of 45).

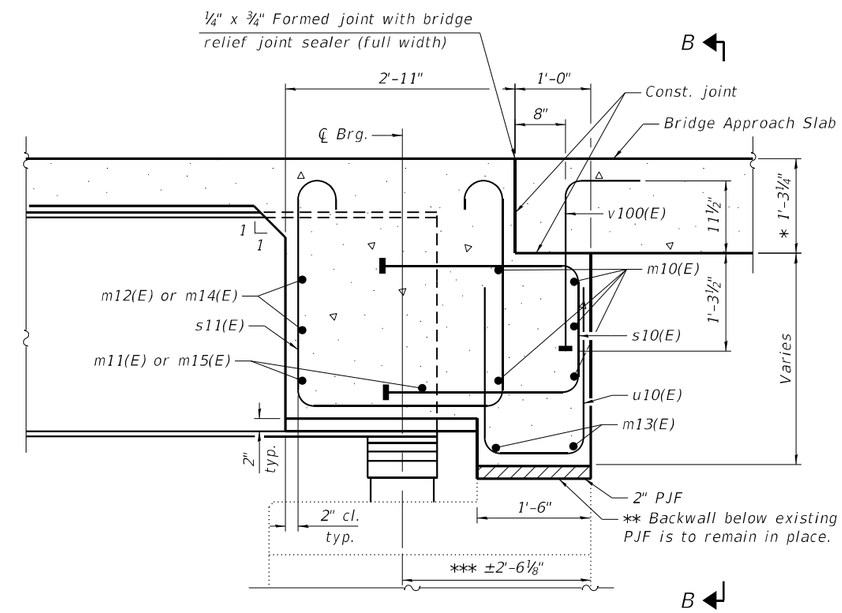

SECTION A-A

(at Rt. ∠'s)

Notes:

See sheets 16 and 17 of 45 for superstructure details and Bill of Material.

The s10(E), s11(E), and u10(E) bars shall be placed parallel to the beams. Spacing for these bars shall be at right angles to the beams.

The approach slab seat shall have a constant slope determined from the control points shown.

Cost of fabric reinforced elastomeric mat, galvanized plate, stainless steel expansion bolts with nuts and washers and installation are included in the cost of Concrete Superstructure.

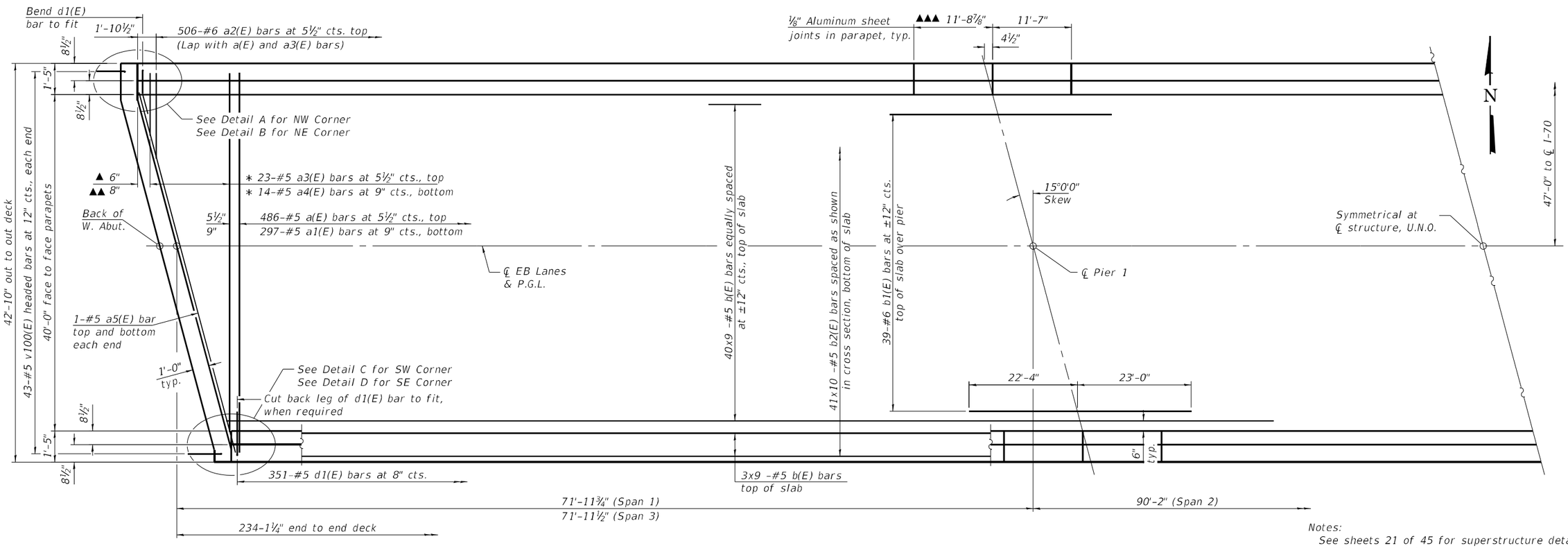

PARTIAL PLAN

▲ 8¼" at Southeast corner.
▲▲ 10½" at Southeast corner.
▲▲▲ 11'-7⅛" at Parapets in Span 3.

∗ See Field Cutting Diagram on sheet 20 of 45.
∗∗ Prior to grinding.

Notes:
See sheets 21 of 45 for superstructure details and Bill of Material.
Bars indicated thus 20 x 3-#5 etc. indicates 20 lines of bars with 3 lengths per line.
See sheet 20 of 45 for parapet reinforcement.
For scupper locations see sheet 1 of 45.
For Details A, B, C, and D see sheet 19 of 45.

MINIMUM BAR LAP

#5 bar = 3'-6"

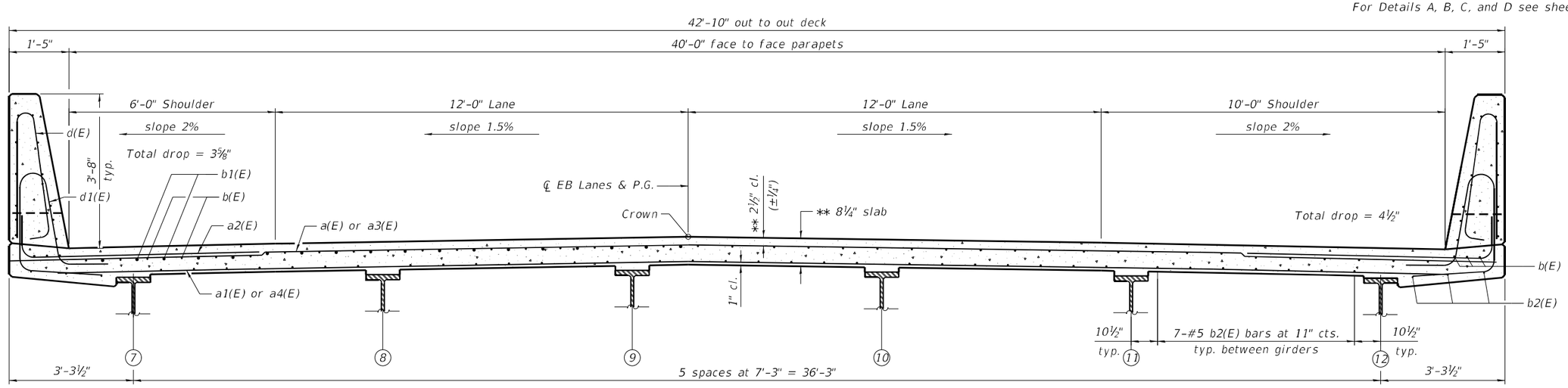

CROSS SECTION

(Looking East)

QUIGG ENGINEERING INC	USER NAME = JCray	DESIGNED - KFO	REVISED -	STATE OF ILLINOIS DEPARTMENT OF TRANSPORTATION	SUPERSTRUCTURE (EB) STRUCTURE NO. 012-0007 (EB)	F.A.I. RTE. 70	SECTION (12-53B-1)BR-1	COUNTY CLARK
	0120006_0120007-74A01-019-Super. (EB).dgn	CHECKED - KWB	REVISED -			TOTAL SHEETS 93	SHEET NO. 52	
	PLOT SCALE =	DRAWN - JDC	REVISED -			CONTRACT NO. 74A01		
	PLOT DATE =	CHECKED - RPW	REVISED -		SHEET 19 OF 45 SHEETS	ILLINOIS	FED. AID PROJECT	

MODEL: Default
FILE NAME: S:\2022\2211L010 - PTB 202-35 - D7 - HMG - I-70 Ph I-Ill\CADD\CADD Sheets\0120006_0120007-74A01-019-Super. (EB).dgn
1/22/2025 10:49:36 AM

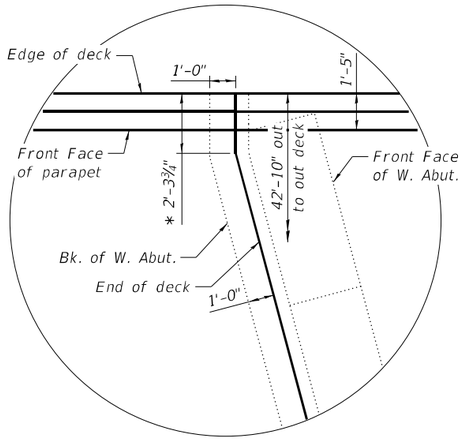

DETAIL A

(Reinforcement not shown for clarity)

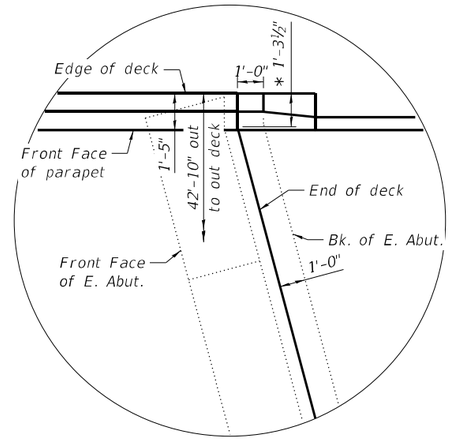

DETAIL B

(Reinforcement not shown for clarity)

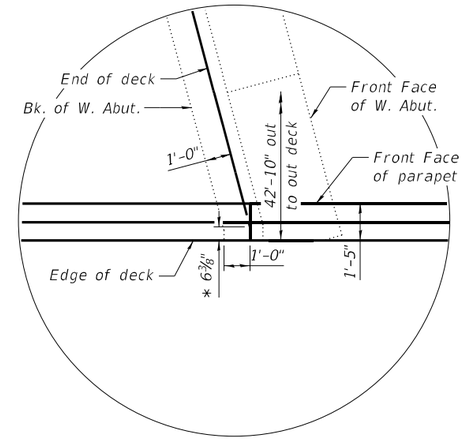

DETAIL C

(Reinforcement not shown for clarity)

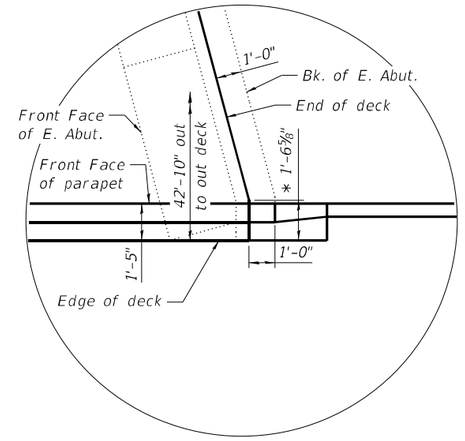

DETAIL D

(Reinforcement not shown for clarity)

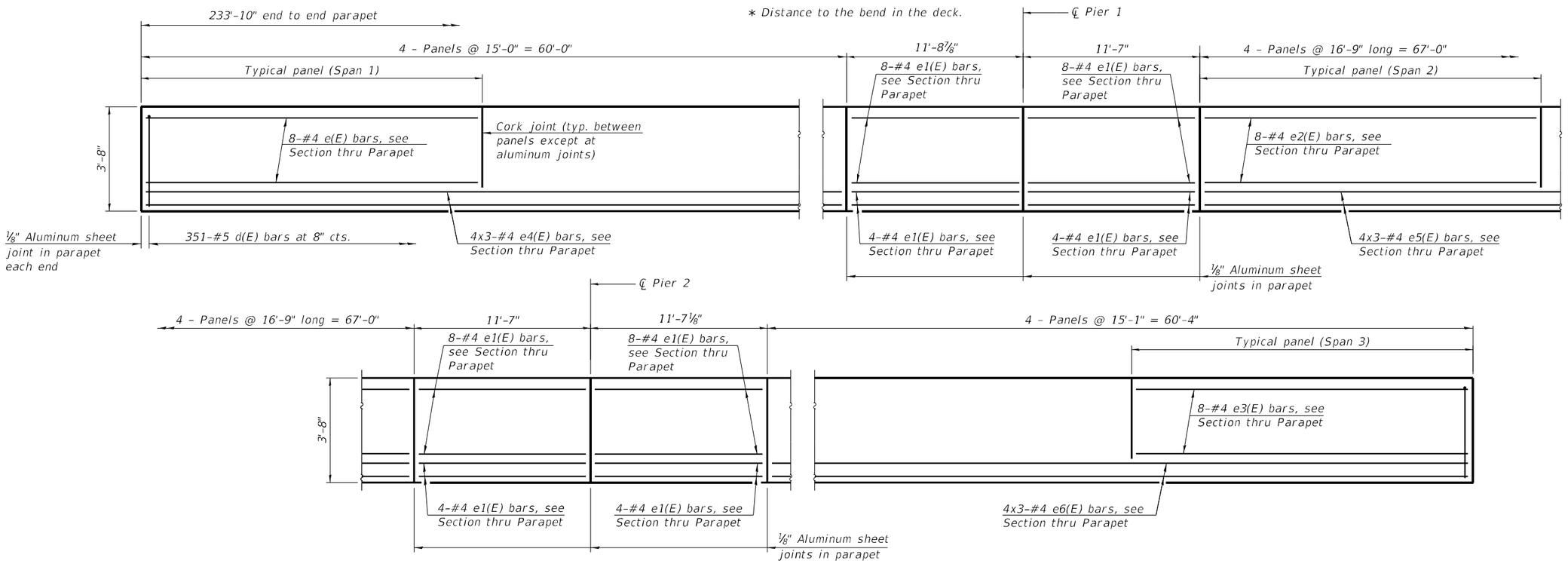

INSIDE ELEVATION PARAPET

MINIMUM BAR LAP

#4 bar = 2'-5"

Note:
See sheet 21 of 45 for additional superstructure details and Bill of Material.
Bars indicated thus 4x3-#4 etc. indicates 4 line of bars with 3 lengths per line.

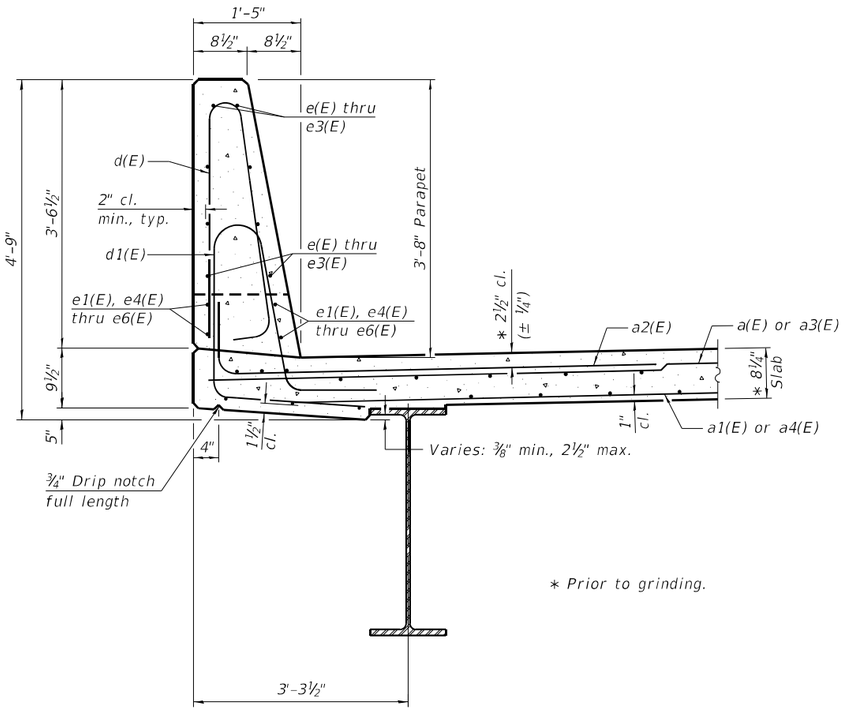

* Prior to grinding.

SECTION THRU PARAPET

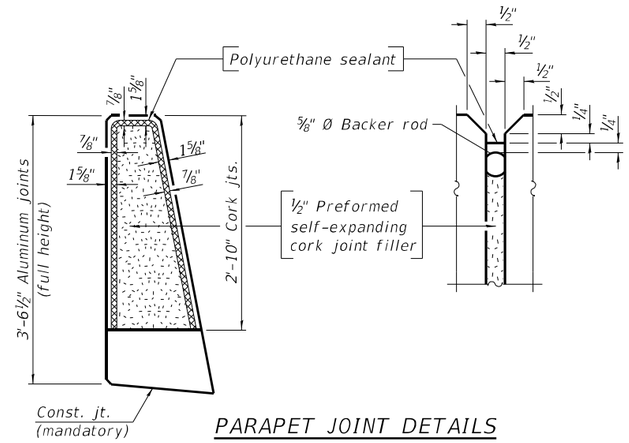

PARAPET JOINT DETAILS

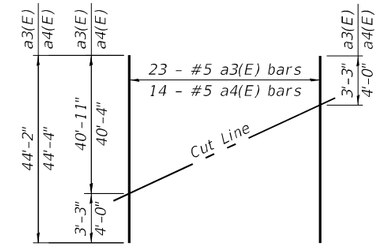

FIELD CUTTING DIAGRAM

Order a3(E) and a4(E) bars full length. Cut as shown and use remainder of bars in opposite end of deck.

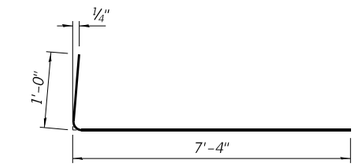

BAR a2(E)

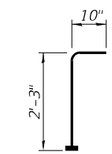

BAR v100(E)

(Headed)
(86-#5 Bar Terminator)

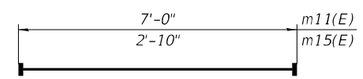

BAR m11(E) & m15(E)

(Headed)
(m11(E) - 40-#6 Bar Terminators)
(m15(E) - 16-#6 Bar Terminators)

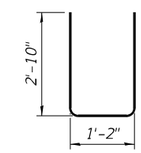

BAR u10(E)

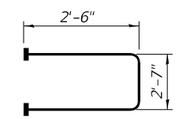

BAR s10(E)

(Headed)
(144-#5 Bar Terminator)

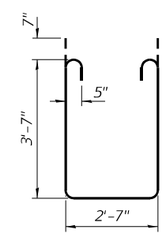

BAR s11(E)

EB SUPERSTRUCTURE BILL OF MATERIAL

Bar	No.	Size	Length	Shape
a(E)	486	#5	42'-6"	
a1(E)	297	#5	40'-6"	
a2(E)	1,012	#6	8'-4"	
a3(E)	23	#5	44'-2"	
a4(E)	14	#5	44'-4"	
a5(E)	4	#5	41'-10"	
a6(E)	48	#5	2'-0"	
b(E)	414	#5	29'-2"	
b1(E)	78	#6	45'-4"	
b2(E)	410	#5	26'-7"	
d(E)	702	#5	7'-0"	
d1(E)	702	#5	8'-5"	
e(E)	64	#4	14'-8"	
e1(E)	96	#4	11'-3"	
e2(E)	64	#4	16'-5"	
e3(E)	64	#4	14'-9"	
e4(E)	24	#4	21'-6"	
e5(E)	24	#4	23'-10"	
e6(E)	24	#4	21'-8"	
m10(E)	10	#6	44'-0"	
m11(E)	20	#6	7'-0"	
m12(E)	20	#6	7'-0"	
m13(E)	4	#4	44'-0"	
m14(E)	8	#6	2'-10"	
m15(E)	8	#6	2'-10"	
s10(E)	72	#5	7'-7"	
s11(E)	72	#5	10'-11"	
u10(E)	86	#5	6'-10"	
v100(E)	86	#5	3'-1"	
Reinforcement Bars, Epoxy Coated			Pound	96,600
Concrete Superstructure			Cu. Yds.	408.5

Bars indicated thus 1 x 2-#4 etc. indicates 1 line of bars with 2 lengths per line.

Notes:

The ⅛" Aluminum sheet shall be ASTM B 209 alloy 3003-H14 and coated to minimize reaction with wet concrete. Cost included with Concrete Superstructure.

The Polyurethane Sealant shall be according to Article 1050.04 of the Std. Spec. and the color shall be gray.

Bar terminators paid for separately. See Total Bill of Material.

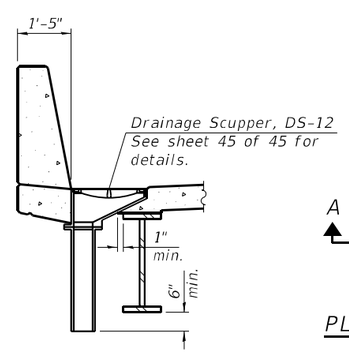

SECTION A-A

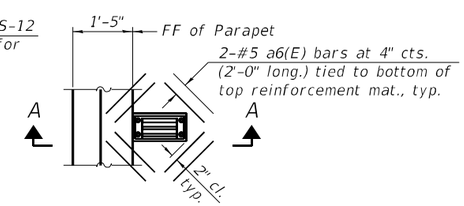

PLAN AT DS-12 SCUPPER

Note:

Cut longitudinal reinforcement to clear drainage scuppers.

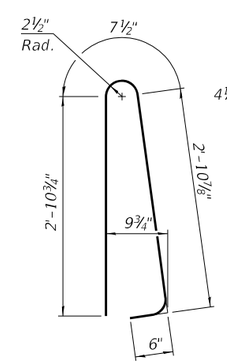

BAR d(E)

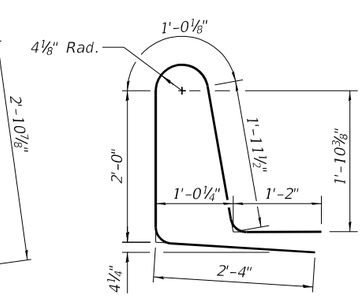

BAR d1(E)

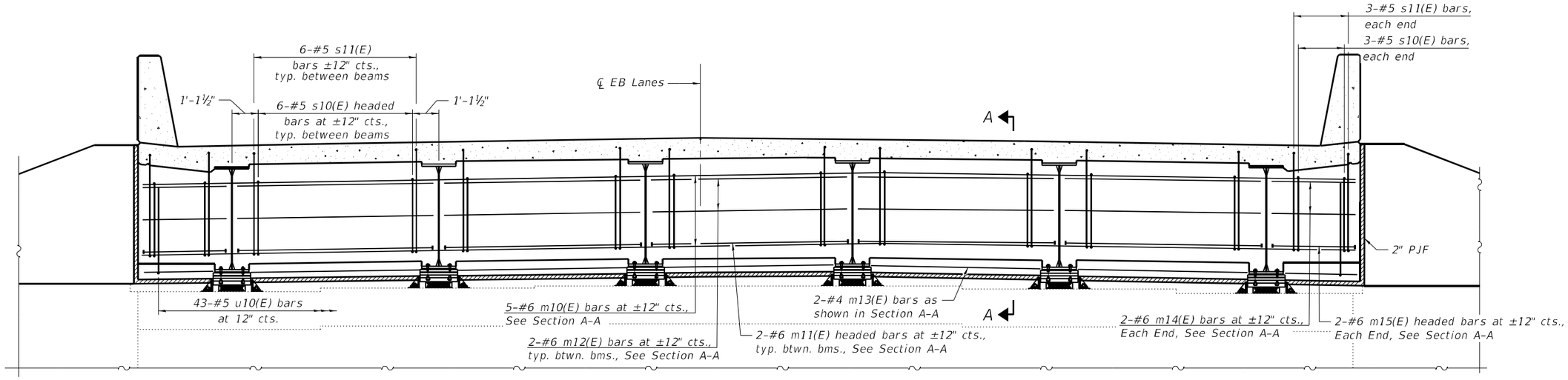

DIAPHRAGM AT ABUTMENT

Looking East (East Abutment Shown, West Abutment Similar)

* Prior to grinding.
** Remove and replace existing PJF.
*** See Top of Slab Elevations Tables for exact Stations and Offsets of ℄ Bearing of each girder. The surveyed distance from the back of the abutment to the proposed centerline of bearing varies due to the adjustment of the alignment to be parallel to the interstate.

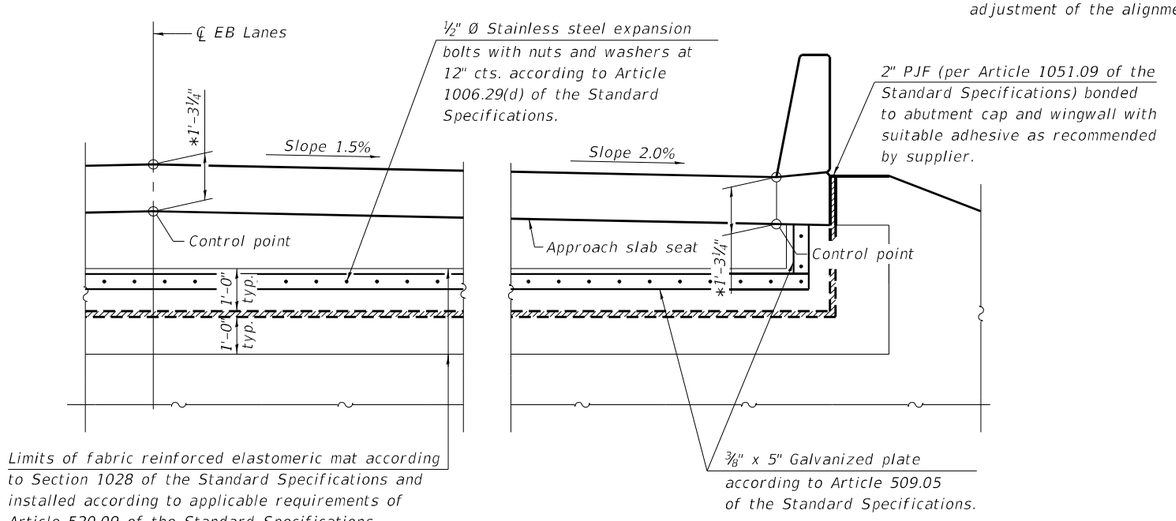

VIEW B-B

(Showing 2" PJF and limits of Fabric Reinforced Elastomeric Mat. See Section Thru Semi-Integral Abutment on Sheet 2 of 45).

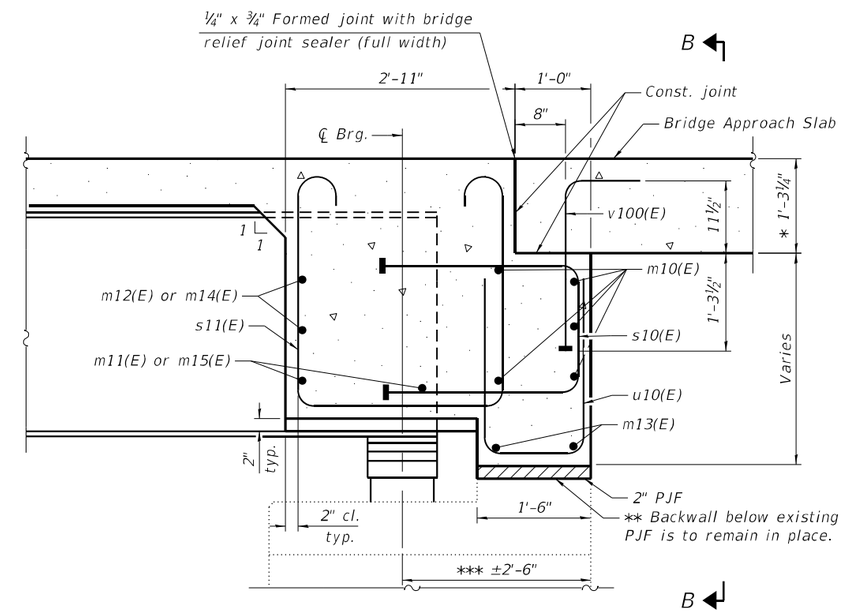

SECTION A-A

(at Rt. ∠'s)

Notes:

See sheets 20 and 21 of 45 for superstructure details and Bill of Material.

The s10(E), s11(E), and u10(E) bars shall be placed parallel to the beams. Spacing for these bars shall be at right angles to the beams.

The approach slab seat shall have a constant slope determined from the control points shown.

Cost of fabric reinforced elastomeric mat, galvanized plate, stainless steel expansion bolts with nuts and washers and installation are included in the cost of Concrete Superstructure.

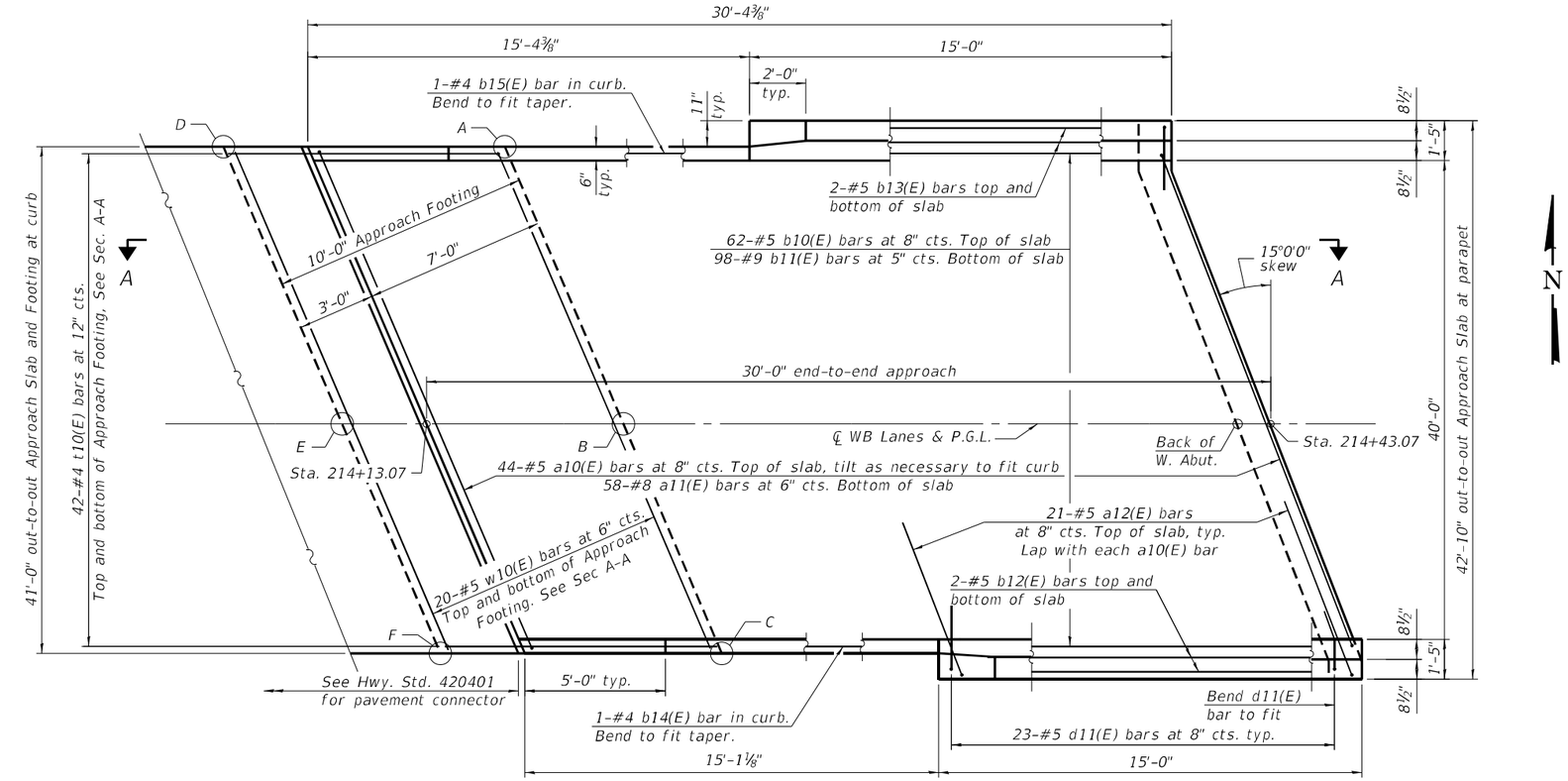

PLAN

TOP AND BOTTOM ELEVATIONS FOR APPROACH FOOTING

Point/ Location	Approach Top	Approach Bottom
A	545.49	544.66
B	545.79	544.96
C	545.40	544.57
D	545.65	544.82
E	545.95	545.12
F	545.56	544.73

* Prior to Grinding

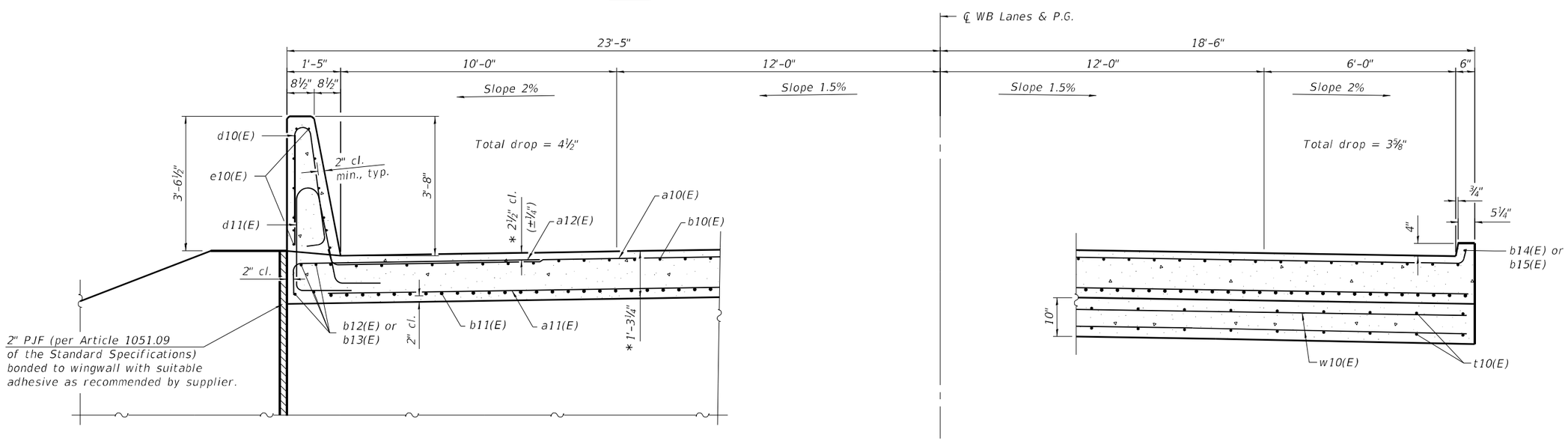

NEAR ABUTMENT

CROSS SECTION
(Looking East)

AT APPROACH FOOTING

MODEL: Default
FILE NAME: S:\2022\22IL010 - PTB 202-35 - D7 - HMG - I-70 Ph I-H\CADD\CADD Sheets\0120006_0120007-74A01-023-W. Appr. S. (WB).dgn
1/22/2025 10:50:12 AM

QUIGG ENGINEERING INC

USER NAME = JCray	DESIGNED - KFO	REVISED -	
0120006_0120007-74A01-023-W. Appr. S. (WB).dgn	CHECKED - KWB	REVISED -	
PLOT SCALE =	DRAWN - JDC	REVISED -	
PLOT DATE =	CHECKED - RPW	REVISED -	

STATE OF ILLINOIS
DEPARTMENT OF TRANSPORTATION

WEST BRIDGE APPROACH SLAB (WB)
STRUCTURE NO. 012-0006 (WB)

SHEET 23 OF 45 SHEETS

F.A.I. RTE.	SECTION	COUNTY	TOTAL SHEETS	SHEET NO.
70	(12-53B-1)BR-1	CLARK	93	56
		CONTRACT NO. 74A01		
		ILLINOIS	FED. AID PROJECT	

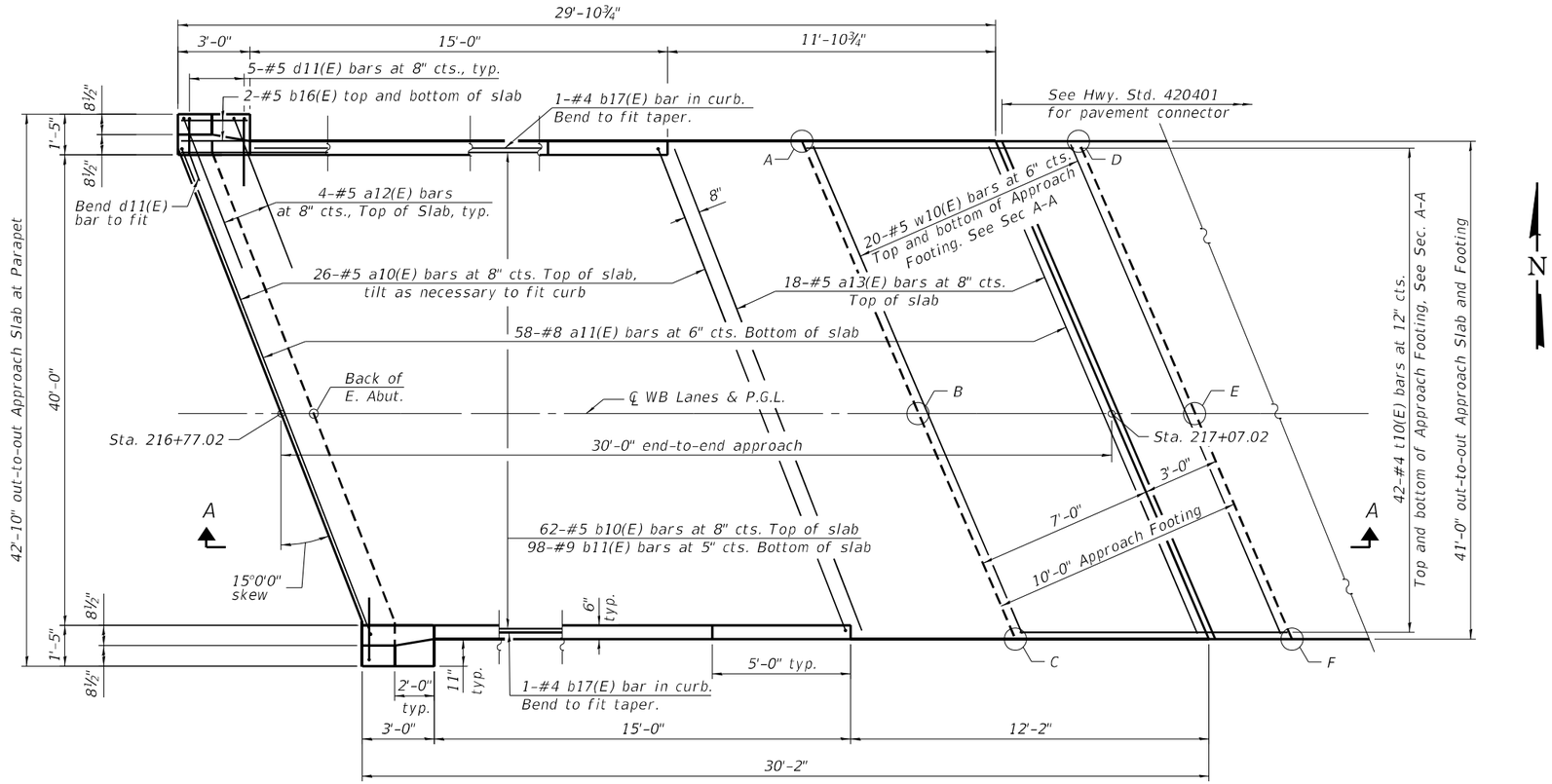

PLAN

TOP AND BOTTOM ELEVATIONS FOR APPROACH FOOTING

Approach		
Point/ Location	Top	Bottom
A	542.63	541.80
B	543.01	542.18
C	542.70	541.87
D	542.62	541.79
E	543.01	542.17
F	542.70	541.86

* Prior to Grinding

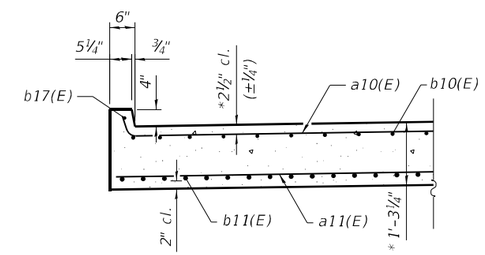

SECTION AT CURB

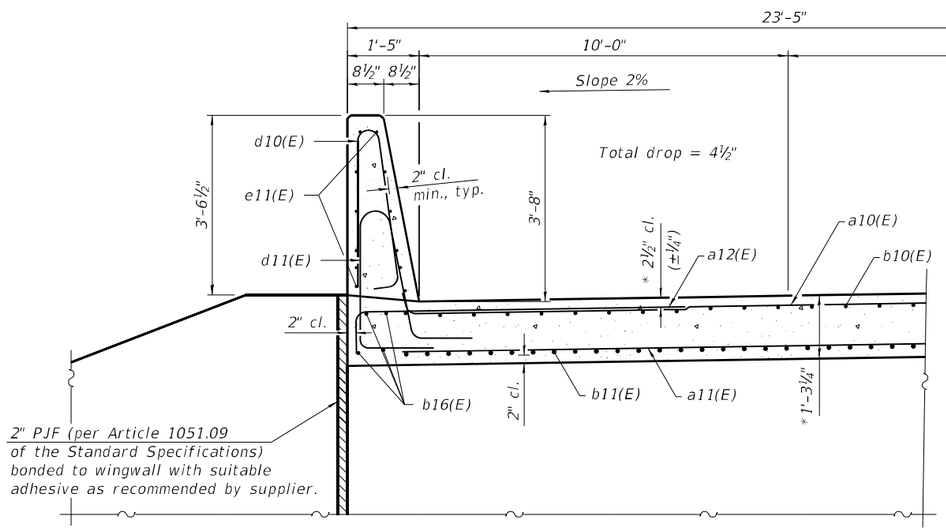

NEAR ABUTMENT

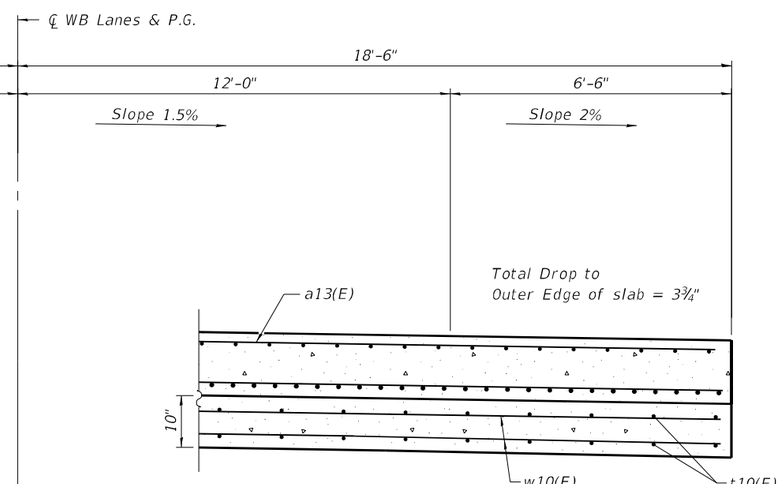

AT APPROACH FOOTING

CROSS SECTION
(Looking East)

QUIGG ENGINEERING INC

USER NAME = JCray	DESIGNED - KFO	REVISED -	
0120006_0120007-74A01-024-E. Appr. S. (WB).dgn	CHECKED - KWB	REVISED -	
PLOT SCALE =	DRAWN - JDC	REVISED -	
PLOT DATE =	CHECKED - RPW	REVISED -	

STATE OF ILLINOIS
DEPARTMENT OF TRANSPORTATION

EAST BRIDGE APPROACH SLAB (WB)
STRUCTURE NO. 012-0006 (WB)

SHEET 24 OF 45 SHEETS

F.A.I. RTE.	SECTION	COUNTY	TOTAL SHEETS	SHEET NO.
70	(12-53B-1)BR-1	CLARK	93	57

CONTRACT NO. 74A01

ILLINOIS FED. AID PROJECT

MODEL: Default
FILE NAME: S:\2022\2211L010 - PTB 202-35 - D7 - HMG - I-70 Ph II\CADD\CADD Sheets\0120006_0120007-74A01-024-E. Appr. S. (WB).dgn
1/22/2025 10:50:21 AM

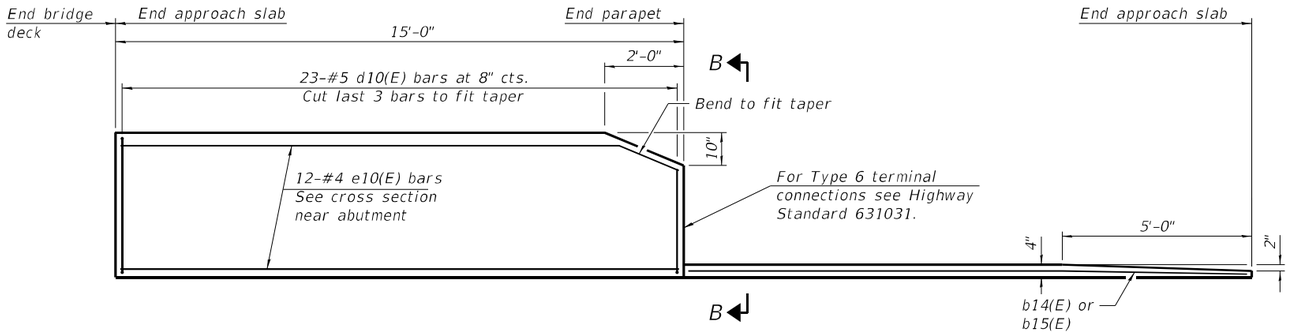

INSIDE ELEVATION OF PARAPET AND CURB AT WEST APPROACH SLAB

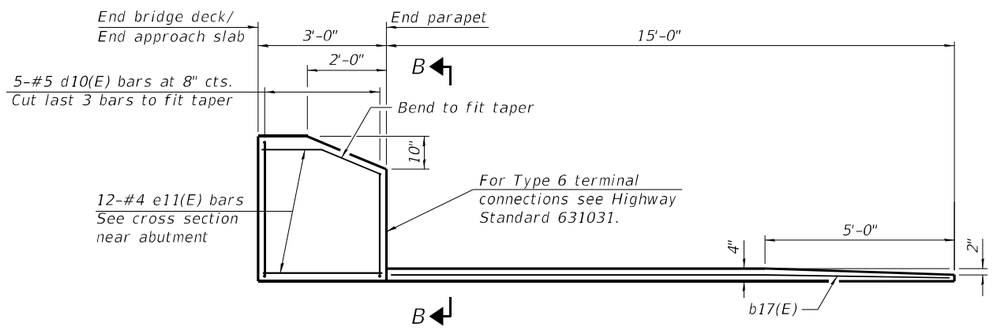

INSIDE ELEVATION OF PARAPET AND CURB AT EAST APPROACH SLAB

Notes:

The joint opening shall be adjusted for temperature per Article 520.04 of the Standard Specifications. However, since this detail is for jointless structures, the length of bridge used to calculate the adjustment shall be equal to half the total bridge length plus the length of the bridge approach slab.

Parapet concrete shall be paid for as Concrete Superstructure.

Approach slab shall be paid for as Concrete Superstructure (Approach Slab).

Approach footing concrete shall be paid for as Concrete Structures.

The approach footing maximum applied service bearing pressure (Qmax) = 2.0 ksf.

Cost of excavation for approach footing included with Concrete Structures.

For Granular Backfill for Structures and drainage treatment details, see sheet 2 of 45.

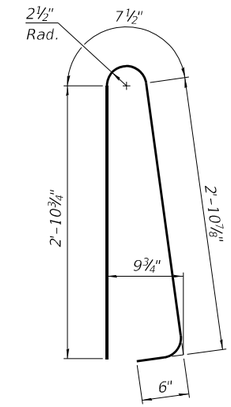

BAR d10(E)

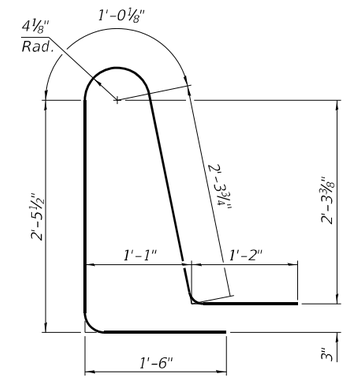

BAR d11(E)

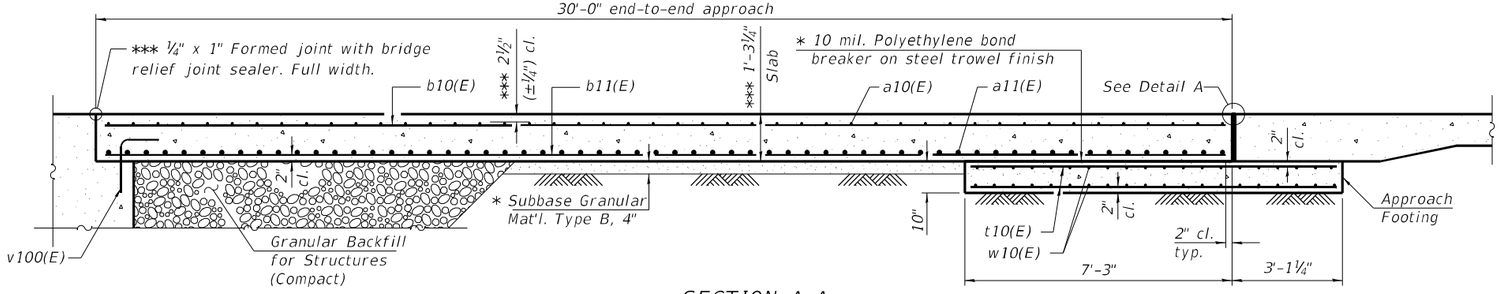

SECTION A-A

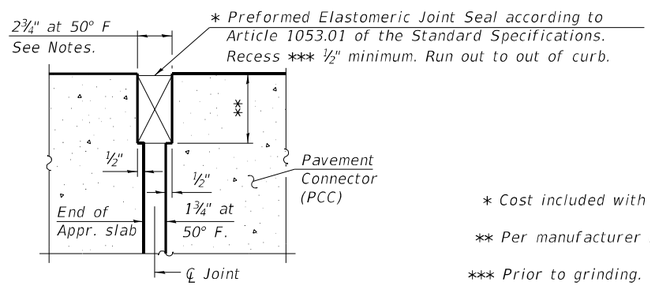

DETAIL A

(at Rt. L's)

* Cost included with Concrete Superstructure (Approach Slab).

** Per manufacturer recommendations.

*** Prior to grinding.

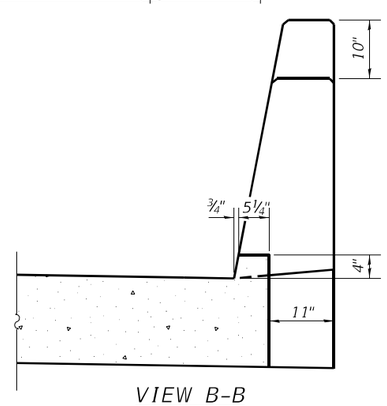

VIEW B-B

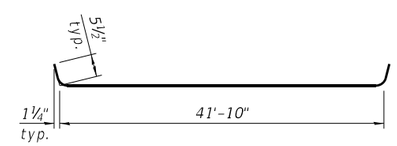

BAR a10(E)

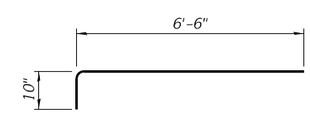

BAR a12(E)

WESTBOUND APPROACHES

BILL OF MATERIAL

Bar	No.	Size	Length	Shape
a10(E)	70	#5	42'-9"	
a11(E)	116	#8	42'-1"	
a12(E)	50	#5	7'-4"	
a13(E)	18	#5	42'-1"	
b10(E)	124	#5	29'-8"	
b11(E)	196	#9	29'-8"	
b12(E)	4	#5	14'-6"	
b13(E)	4	#5	14'-8"	
b14(E)	1	#4	14'-9"	
b15(E)	1	#4	15'-0"	
b16(E)	8	#5	2'-8"	
b17(E)	2	#4	14'-8"	
d10(E)	56	#5	7'-0"	
d11(E)	56	#5	8'-6"	
e10(E)	24	#4	14'-8"	
e11(E)	24	#4	2'-8"	
t10(E)	168	#4	10'-0"	
w10(E)	80	#5	42'-1"	
Concrete Superstructure			Cu. Yd.	5.1
Concrete Superstructure (Approach Slab)			Cu. Yd.	117.7
Concrete Structures			Cu. Yd.	26.4
Reinforcement Bars, Epoxy Coated			Pound	46,950

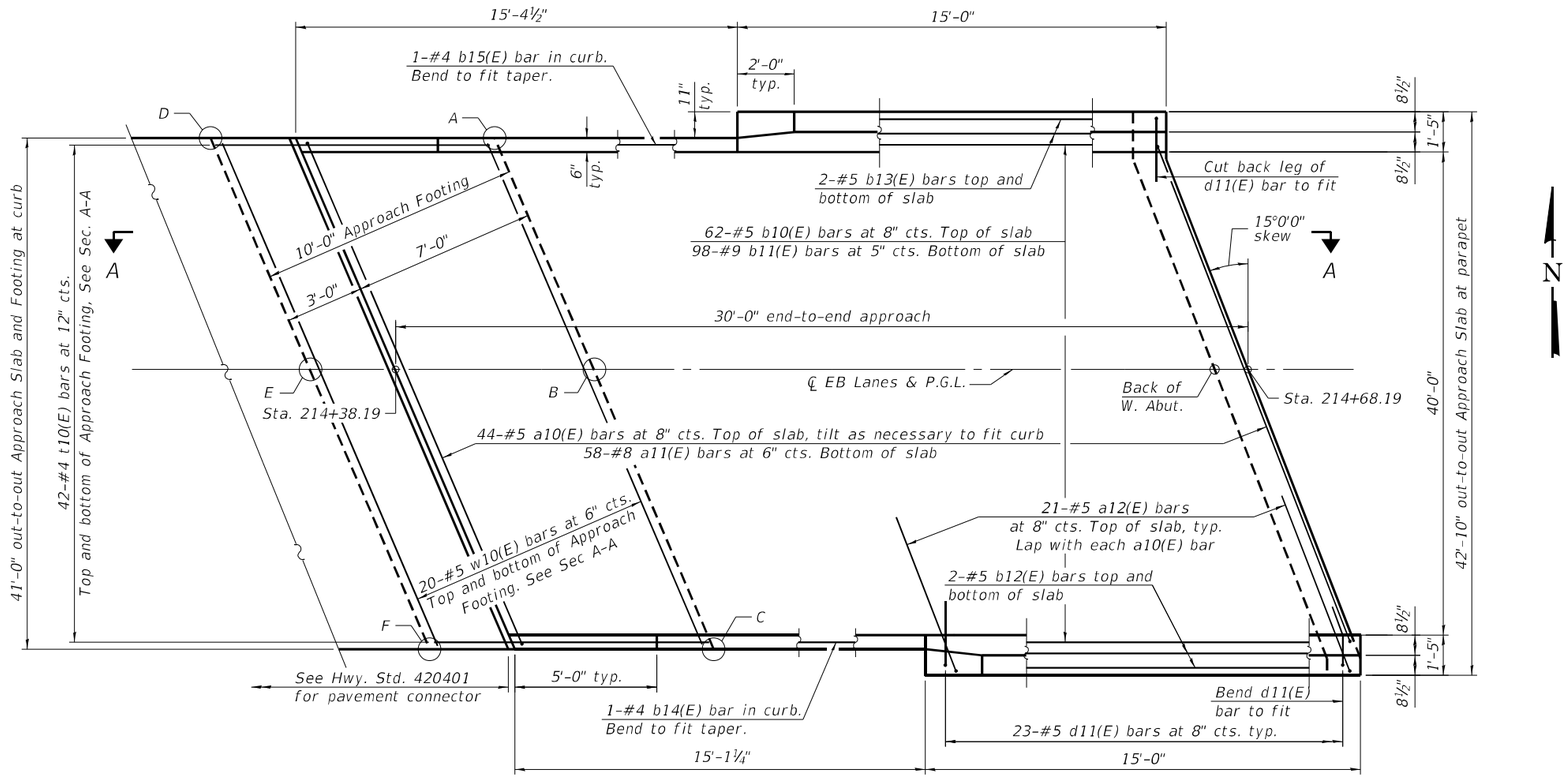

PLAN

TOP AND BOTTOM ELEVATIONS FOR APPROACH FOOTING

Approach		
Point/ Location	Top	Bottom
A	545.17	544.33
B	545.40	544.57
C	544.92	544.08
D	545.33	544.50
E	545.56	544.73
F	545.08	544.24

* Prior to Grinding

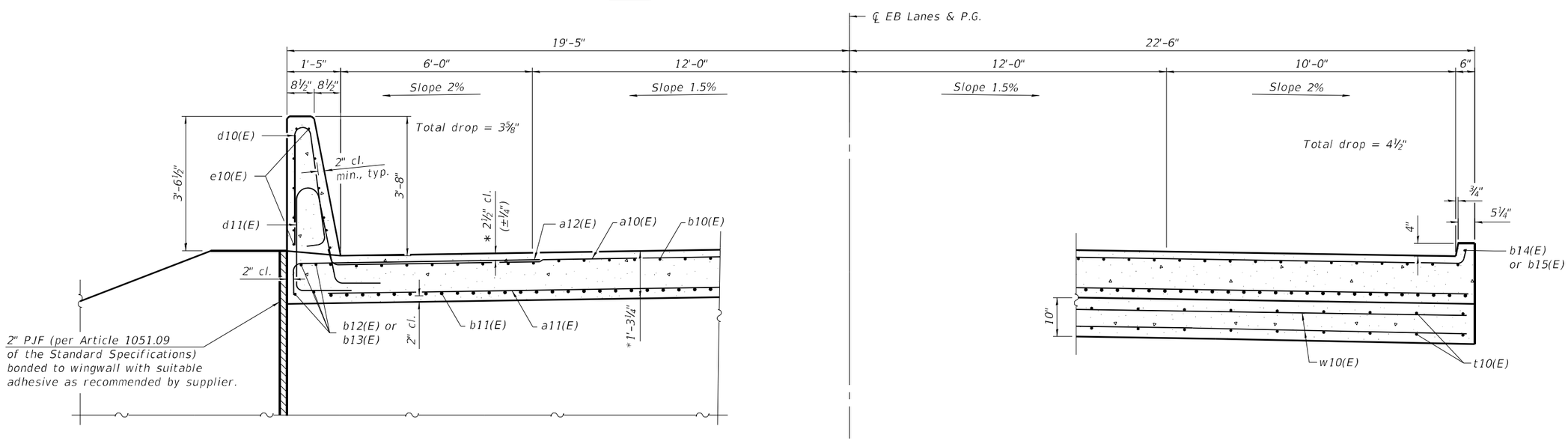

NEAR ABUTMENT

CROSS SECTION

(Looking East)

AT APPROACH FOOTING

MODEL: Default
FILE NAME: S:\2022\22IL010 - PTB 202-35 - D7 - HMG - I-70 Ph I-H\CADD\CADD Sheets\0120006_0120007-74A01-026-W. Appr. S. (EB).dgn
1/22/2025 10:50:39 AM

QUIGG ENGINEERING INC

USER NAME = JCray	DESIGNED - KFO	REVISED -	
0120006_0120007-74A01-026-W. Appr. S. (EB).dgn	CHECKED - KWB	REVISED -	
PLOT SCALE =	DRAWN - JDC	REVISED -	
PLOT DATE =	CHECKED - RPW	REVISED -	

STATE OF ILLINOIS
DEPARTMENT OF TRANSPORTATION

WEST BRIDGE APPROACH SLAB (EB)
STRUCTURE NO. 012-0007 (EB)

SHEET 26 OF 45 SHEETS

F.A.I. RTE.	SECTION	COUNTY	TOTAL SHEETS	SHEET NO.
70	(12-53B-1)BR-1	CLARK	93	59
		CONTRACT NO. 74A01		
	ILLINOIS	FED. AID PROJECT		

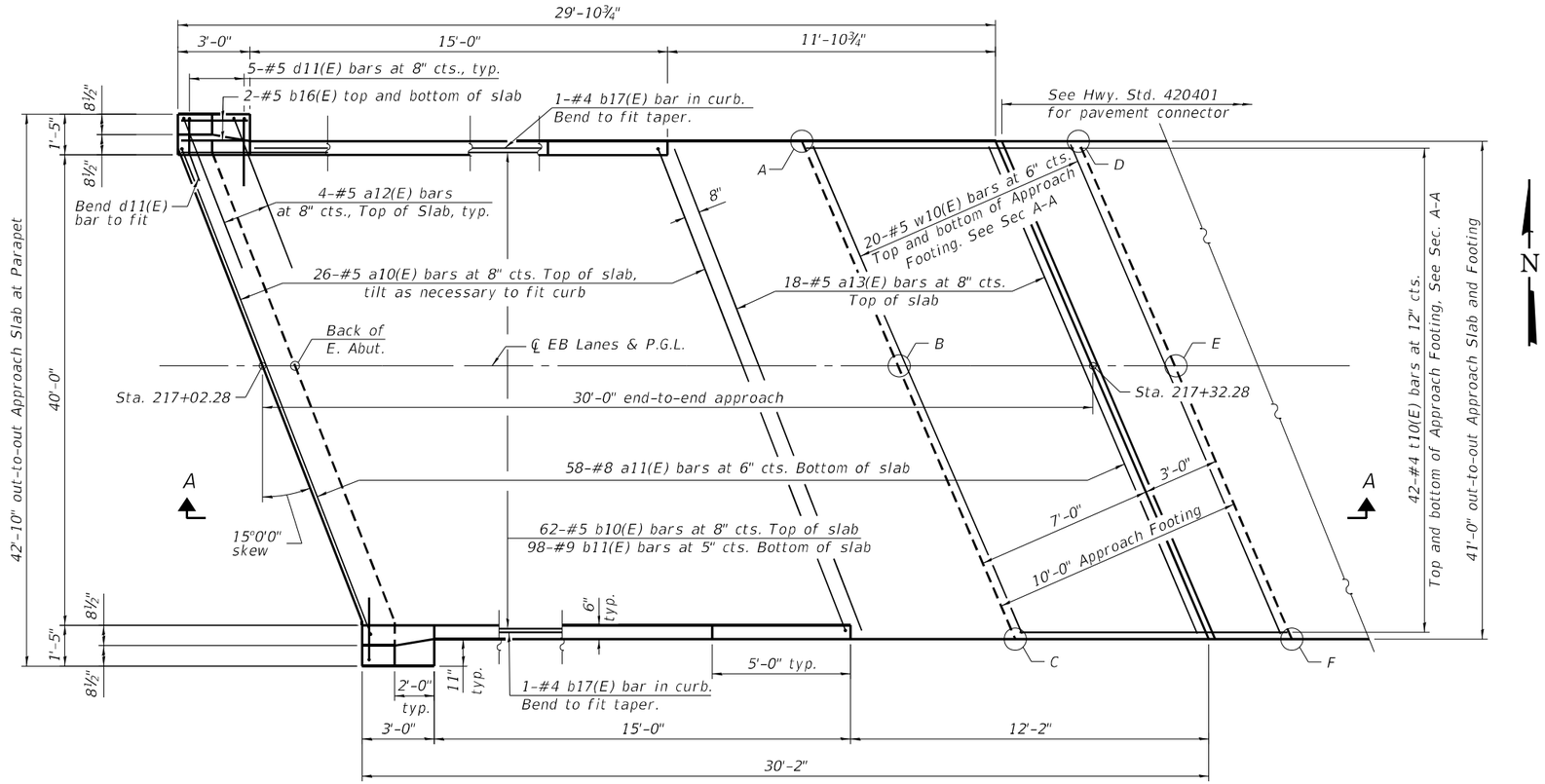

PLAN

TOP AND BOTTOM ELEVATIONS FOR APPROACH FOOTING

Approach		
Point/ Location	Top	Bottom
A	542.70	541.87
B	543.01	542.18
C	542.63	541.80
D	542.71	541.88
E	543.03	542.19
F	542.65	541.81

∗ Prior to Grinding

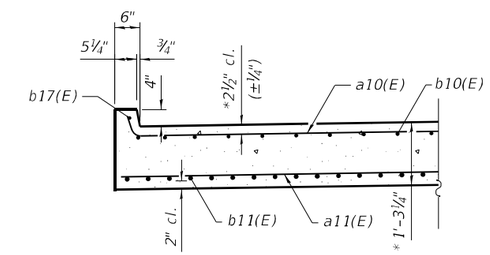

SECTION AT CURB

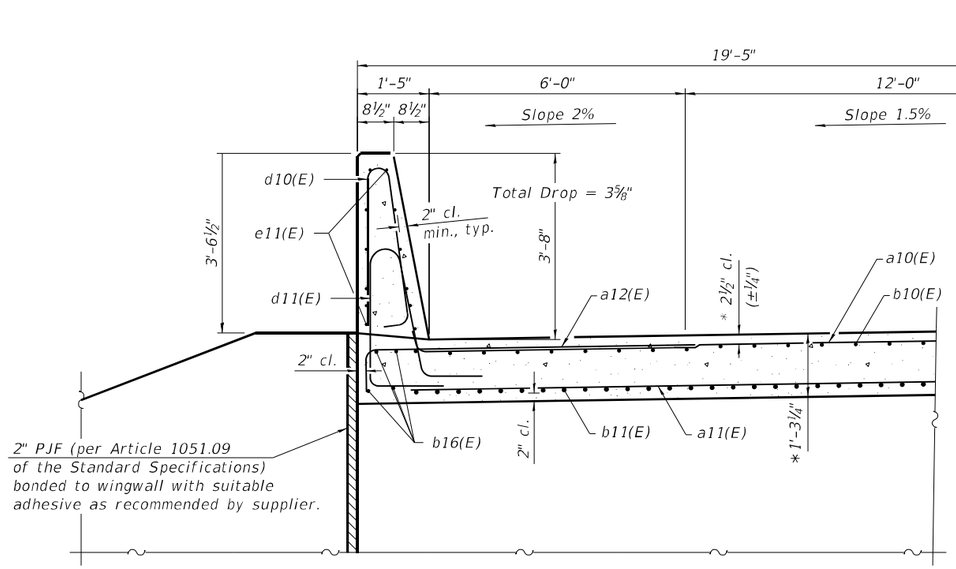

NEAR ABUTMENT

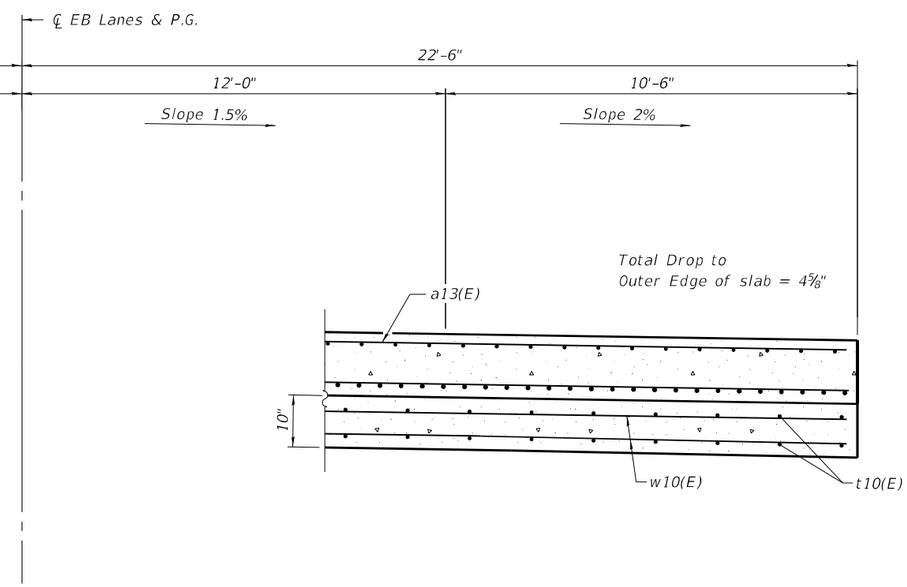

AT APPROACH FOOTING

CROSS SECTION
(Looking East)

QUIGG ENGINEERING INC	USER NAME = JCray	DESIGNED - KFO	REVISED -
	0120006_0120007-74A01-027-E. Appr. S. (EB).dgn	CHECKED - KWB	REVISED -
	PLOT SCALE =	DRAWN - JDC	REVISED -
	PLOT DATE =	CHECKED - RPW	REVISED -

STATE OF ILLINOIS
DEPARTMENT OF TRANSPORTATION

EAST BRIDGE APPROACH SLAB (EB)
STRUCTURE NO. 012-0007 (EB)

SHEET 27 OF 45 SHEETS

F.A.I. RTE.	SECTION	COUNTY	TOTAL SHEETS	SHEET NO.
70	(12-53B-1)BR-1	CLARK	93	60
		CONTRACT NO. 74A01		
	ILLINOIS	FED. AID PROJECT		

MODEL: Default
FILE NAME: S:\2022\2211010 - PTB 202-35 - D7 - HMG - I-70 Ph II\CADD\CADD Sheets\0120006_0120007-74A01-027-E. Appr. S. (EB).dgn
1/22/2025 10:50:47 AM

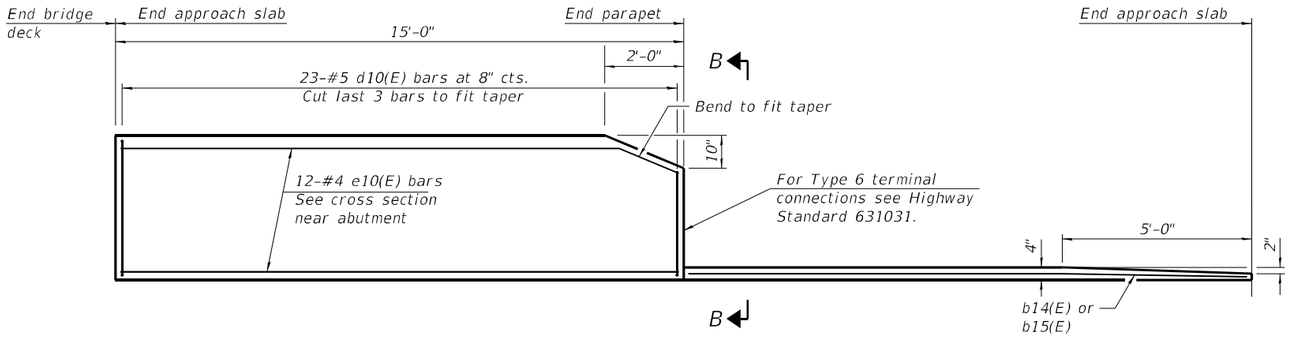

INSIDE ELEVATION OF PARAPET AND CURB AT WEST APPROACH SLAB

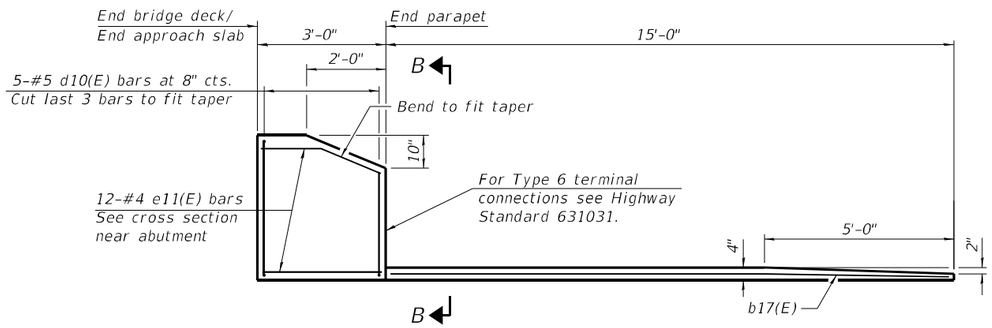

INSIDE ELEVATION OF PARAPET AND CURB AT EAST APPROACH SLAB

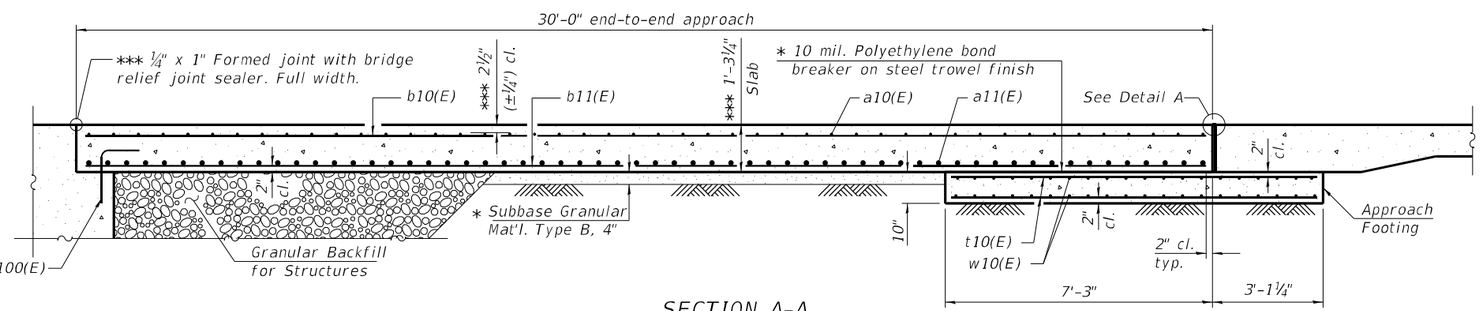

SECTION A-A

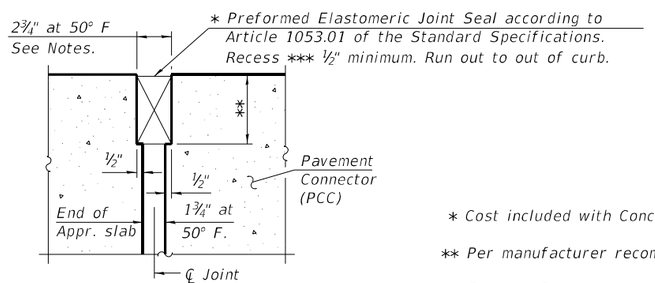

DETAIL A
(at Rt. ∠'s)

* Cost included with Concrete Superstructure (Approach Slab).

** Per manufacturer recommendations.

*** Prior to Grinding.

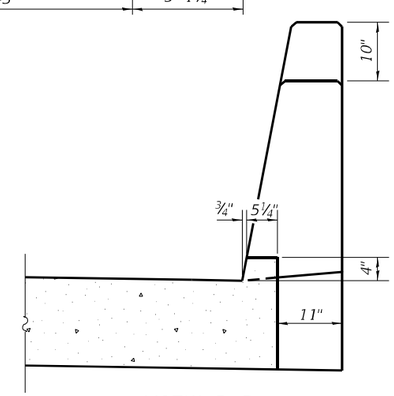

VIEW B-B

Notes:

The joint opening shall be adjusted for temperature per Article 520.04 of the Standard Specifications. However, since this detail is for jointless structures, the length of bridge used to calculate the adjustment shall be equal to half the total bridge length plus the length of the bridge approach slab.

Parapet concrete shall be paid for as Concrete Superstructure.

Approach slab shall be paid for as Concrete Superstructure (Approach Slab).

Approach footing concrete shall be paid for as Concrete Structures.

The approach footing maximum applied service bearing pressure (Qmax) = 2.0 ksf.

Cost of excavation for approach footing included with Concrete Structures.

For Granular Backfill for Structures and drainage treatment details, see sheet 2 of 45.

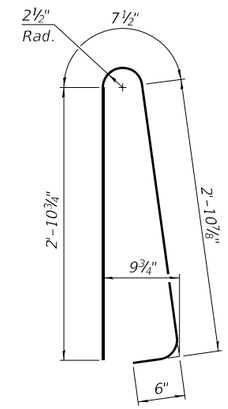

BAR d10(E)

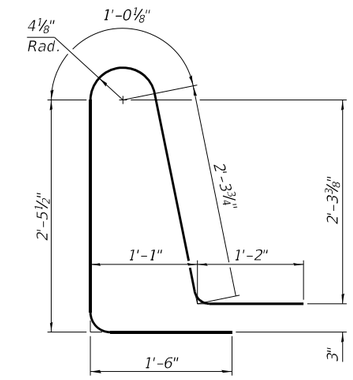

BAR d11(E)

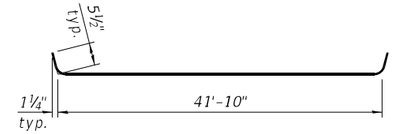

BAR a10(E)

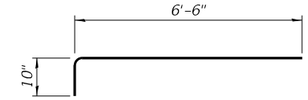

BAR a12(E)

EASTBOUND APPROACHES BILL OF MATERIAL

Bar	No.	Size	Length	Shape
a10(E)	70	#5	42'-9"	
a11(E)	116	#8	42'-1"	
a12(E)	50	#5	7'-4"	
a13(E)	18	#5	42'-1"	
b10(E)	124	#5	29'-8"	
b11(E)	196	#9	29'-8"	
b12(E)	4	#5	14'-6"	
b13(E)	4	#5	14'-8"	
b14(E)	1	#4	14'-9"	
b15(E)	1	#4	15'-0"	
b16(E)	8	#5	2'-8"	
b17(E)	2	#4	14'-8"	
d10(E)	56	#5	7'-0"	
d11(E)	56	#5	8'-6"	
e10(E)	24	#4	14'-8"	
e11(E)	24	#4	2'-8"	
t10(E)	168	#4	10'-0"	
w10(E)	80	#5	42'-1"	
Concrete Superstructure			Cu. Yd.	5.1
Concrete Superstructure (Approach Slab)			Cu. Yd.	117.7
Concrete Structures			Cu. Yd.	26.4
Reinforcement Bars, Epoxy Coated			Pound	46,950

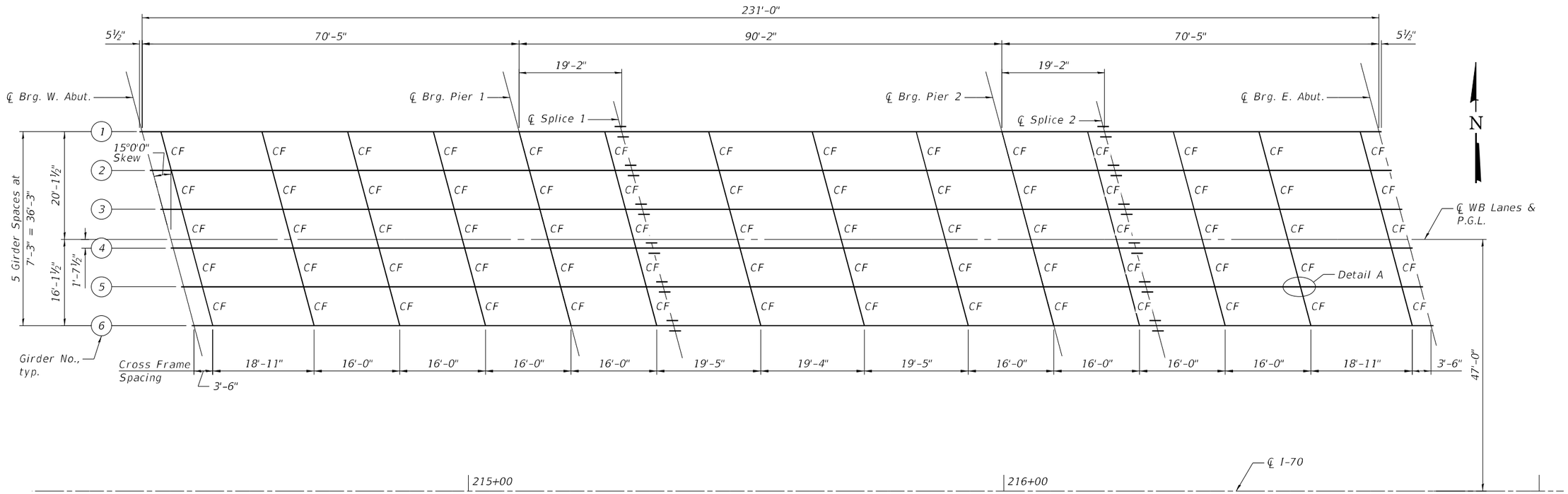

FRAMING PLAN

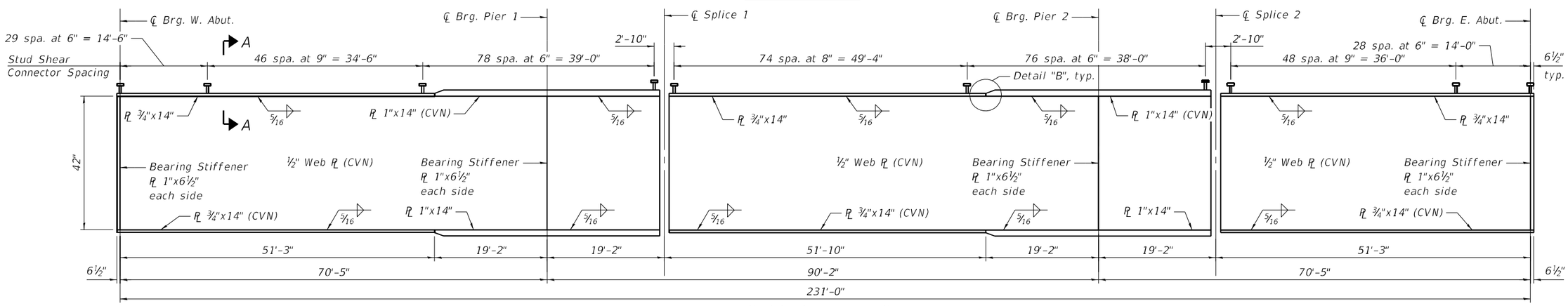

GIRDER ELEVATION

Load carrying components designated "CVN" shall conform to the Charpy-V-Notch Impact Energy Requirement, Zone 2

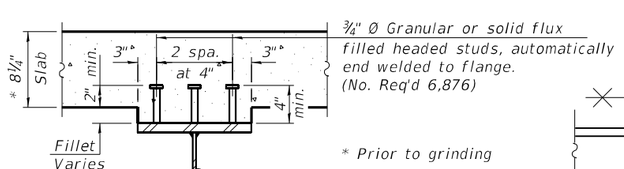

SECTION A-A

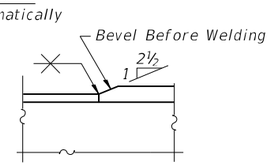

DETAIL "B"

TOP OF WEB ELEVATIONS TABLE

(For Fabrication Only)

Location	℄ Brg. W. Abut.	℄ Brg. Pier 1	℄ Splice 1	℄ Brg. Pier 2	℄ Splice 2	℄ Brg. E. Abut.
Girder 1	545.49	544.35	544.04	543.37	543.18	543.03
Girder 2	545.61	544.47	544.16	543.50	543.32	543.17
Girder 3	545.69	544.55	544.24	543.63	543.47	543.28
Girder 4	545.73	544.60	544.30	543.65	543.47	543.31
Girder 5	545.58	544.41	544.09	543.50	543.33	543.19
Girder 6	545.42	544.28	543.97	543.35	543.18	543.09

Notes:

See Sheet 31 of 45 for Detail A and additional details.

All girders, bearing stiffeners, and splice plates, shall be AASHTO M270 Grade 50.

All cross frames shall be installed as steel is erected and secured with erection pins and bolts except as otherwise noted. Individual cross frames at supports may be temporarily disconnected to install bearing anchor rods.

Girders shall be braced for stability during erection and remain braced until deck is poured and cured.

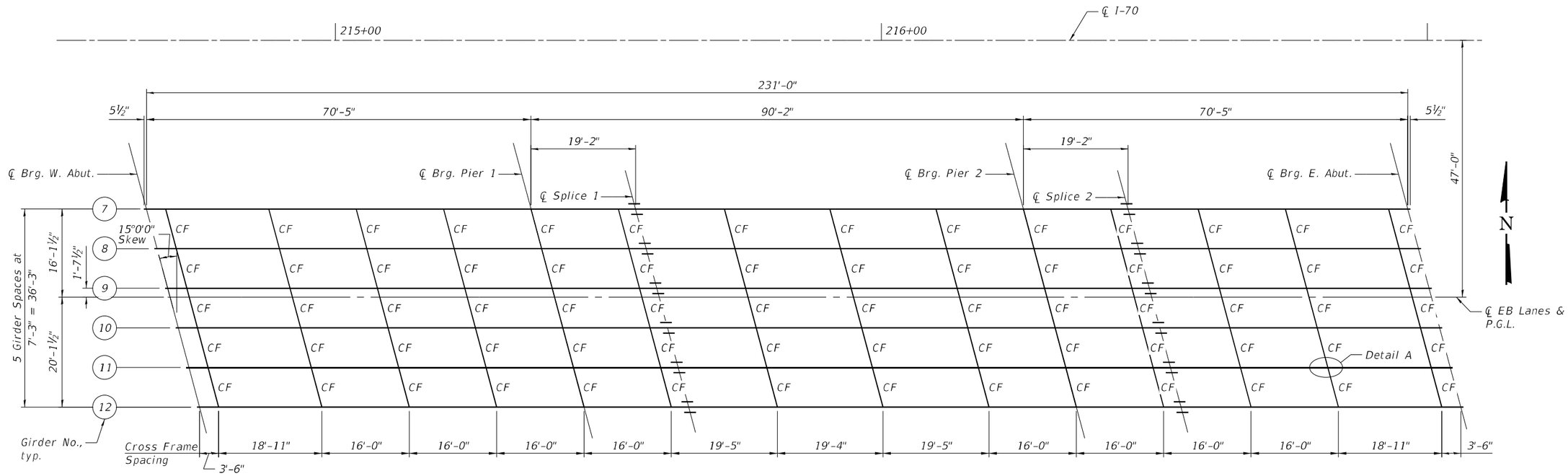

FRAMING PLAN

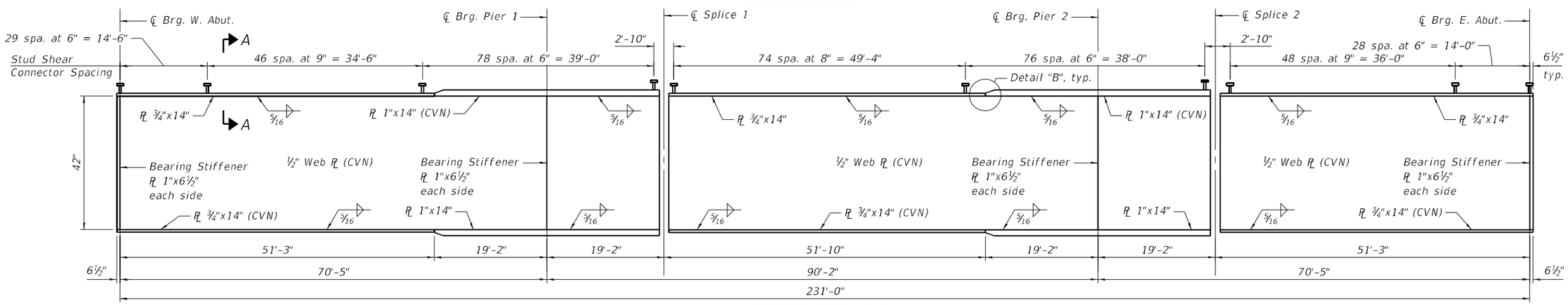

GIRDER ELEVATION

Load carrying components designated "CVN" shall conform to the Charpy-V-Notch Impact Energy Requirement, Zone 2

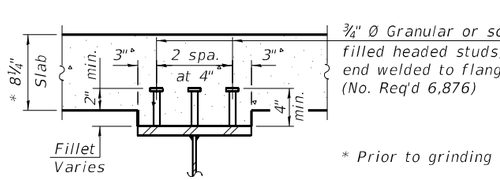

SECTION A-A

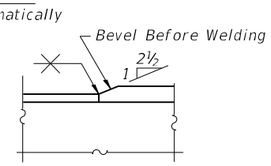

DETAIL "B"

TOP OF WEB ELEVATIONS TABLE

(For Fabrication Only)

Location	℄ Brg. W. Abut.	℄ Brg. Pier 1	℄ Splice 1	℄ Brg. Pier 2	℄ Splice 2	℄ Brg. E. Abut.
Girder 7	545.14	544.08	543.79	543.27	543.12	543.06
Girder 8	545.25	544.20	543.91	543.39	543.24	543.17
Girder 9	545.32	544.26	543.97	543.48	543.34	543.30
Girder 10	545.21	544.20	543.92	543.41	543.26	543.23
Girder 11	545.06	544.03	543.75	543.26	543.12	543.12
Girder 12	544.92	543.88	543.60	543.11	542.97	542.97

Notes:

See Sheet 31 of 45 for Detail A and additional details.

All girders, bearing stiffeners, and splice plates, shall be AASHTO M270 Grade 50.

All cross frames shall be installed as steel is erected and secured with erection pins and bolts except as otherwise noted. Individual cross frames at supports may be temporarily disconnected to install bearing anchor rods.

Girders shall be braced for stability during erection and remain braced until deck is poured and cured.

MODEL: Default
FILE NAME: S:\2022\22IL010 - PTB 202-35 - D7 - HNG - I-70 Ph I-H\CADD\CADD Sheets\0120006_0120007-74A01-030-EB Framing.dgn
1/22/2025 10:51:16 AM

QUIGG ENGINEERING INC

USER NAME = JCray	DESIGNED - KFO	REVISED -	
0120006_0120007-74A01-030-EB Framing.dgn	CHECKED - KWB	REVISED -	
PLOT SCALE =	DRAWN - JDC	REVISED -	
PLOT DATE =	CHECKED - RPW	REVISED -	

STATE OF ILLINOIS
DEPARTMENT OF TRANSPORTATION

STEEL FRAMING PLAN (EB)
STRUCTURE NO. 012-0007 (EB)

SHEET 30 OF 45 SHEETS

F.A.I. RTE.	SECTION	COUNTY	TOTAL SHEETS	SHEET NO.
70	(12-53B-1)BR-1	CLARK	93	63
		CONTRACT NO. 74A01		
	ILLINOIS	FED. AID PROJECT		

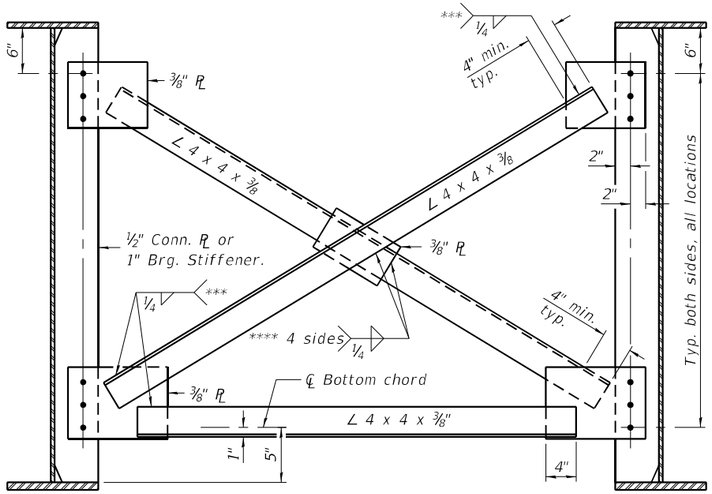

INTERIOR CROSS-FRAME CF

(70 Required)

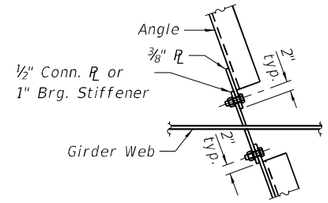

DETAIL A

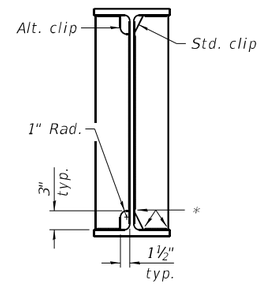

WELD LIMITS AND CLIP DETAILS

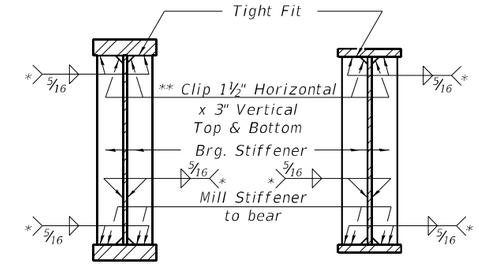

SECTION AT PIER

SECTION AT ABUTMENT

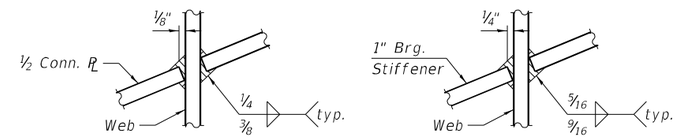

AT CONNECTION PLATE

AT PIERS

AT ABUTMENTS

WEB WELD DETAILS

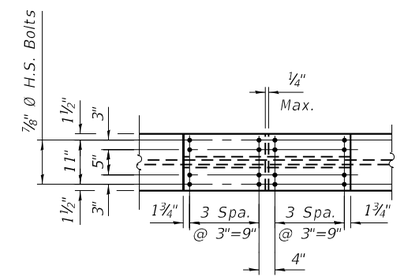

PLAN - TOP AND BOTTOM FLANGE

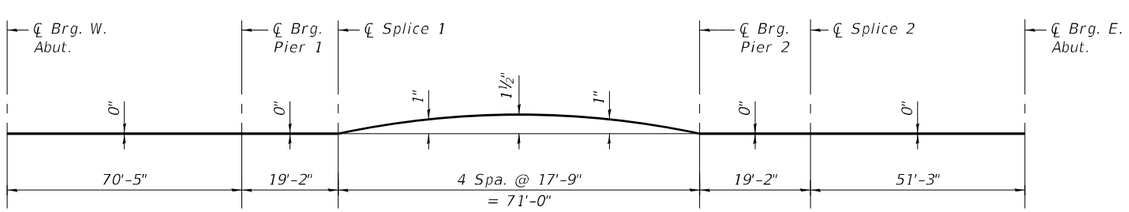

CAMBER DIAGRAM

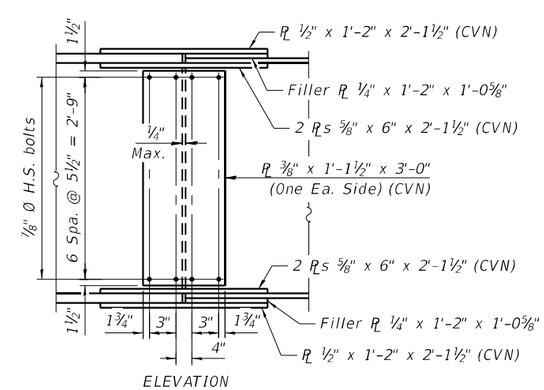

ELEVATION

FIELD SPLICE DETAIL

SPANS 2 & 3

* Stop welds 1/4" (±1/8") from edges as shown. Typical.
** Clip may be rounded for ease of shop painting.
*** Fillet weld angles along 3 sides on one face of gusset plate; however, if cross-frames are galvanized, weld all-around.
**** If cross-frames are galvanized, weld all-around.

Notes:

Detail 15/16" Ø holes for all 7/8" Ø H.S. bolts for Field Splices.

Detail 15/16" Ø holes for all 3/4" Ø H.S. bolts for Interior Cross Frames.

Two hardened washers required for each set of oversized holes at the Interior Cross Frames.

See Sheets 29 and 30 of 45 for Detail A location and additional details.

All girders, bearing stiffeners, and splice plates, including filler plates, shall be AASHTO M270 Grade 50.

"CVN" denotes Charpy-V-Notch impact energy requirements, zone 2.

INTERIOR GIRDER MOMENT TABLE				
		0.4 Sp. 1 or 0.6 Sp. 3	Piers	0.5 Sp. 2
I_s	(in^4)	12,683	16,032	12,683
$I_c(n)$	(in^4)	37,323	43,801	37,323
$I_c(3n)$	(in^4)	27,842	32,456	27,842
$I_c(cr)$	(in^4)	–	–	–
S_s	(in^3)	583	729	583
$S_c(n)$	(in^3)	894	1,064	894
$S_c(3n)$	(in^3)	815	971	815
$S_c(cr)$	(in^3)	–	–	–
S_x	(in^3)	839	805	837
DC1	(k/')	0.964	0.988	0.964
M_{DC1}	('k)	309	-667	320
DC2	(k/')	0.190	0.190	0.190
M_{DC2}	('k)	62	-130	64
DW	(k/')	0.363	0.363	0.363
M_{DW}	('k)	118	-248	122
LLDF		0.603	0.592	0.565
M_{LL+IM}	('k)	833	-962	819
f_ℓ (Strength I)	(ksi)	0	0	0
$M_u + \frac{1}{3} f_\ell S_x$	('k)	2,099	-3,052	2,096
$\phi_f M_n$	('k)	4,544	3,798	4,533
f_s DC1	(ksi)	6.36	-10.98	6.59
f_s DC2	(ksi)	0.91	-1.61	0.94
f_s DW	(ksi)	1.74	-3.07	1.80
f_s ($_{LL}$+IM)	(ksi)	11.18	-10.85	10.99
f_ℓ (Service II)	(ksi)	0	0	0
$f_s + f_\ell/2$ (Service II)	(ksi)	23.54	-29.77	23.61
* Service II Resistance	(ksi)	47.50	47.50	47.50
$f_s + f_\ell/3$ (Strength I)	(ksi)	–	–	–
$\phi_f F_n$	(ksi)	–	–	–
V_f	(k)	63.12	–	68.14

* $0.95R_hF_{yf}$

GIRDER REACTION TABLE			
		Abut.	Pier
LLDF		0.761	0.761
OCF		1.054	–
R_{DC1}	(k)	63.8	87.8
R_{DC2}	(k)	7.7	17.1
R_{DW}	(k)	14.3	32.7
R_{LL}	(k)	65.0	106.3
R_{Im}	(k)	16.0	21.3
R_{Total} (Strength I)(Impact)	(k)	252.6	403.5
R_{Total} (Strength I)(No Impact)	(k)	224.6	366.2

Note: Abutment Reactions include loads from the approach slabs and concrete diaphragms.

I_s, S_s : Non-composite moment of inertia and section modulus of the steel section used for computing f_s(Total-Strength I, and Service II) due to non-composite dead loads ($in.^4$ and $in.^3$).

$I_c(n)$, $S_c(n)$: Composite moment of inertia and section modulus of the steel and deck based upon the modular ratio, "n", used for computing f_s(Total-Strength I, and Service II) in uncracked sections due to short-term composite live loads ($in.^4$ and $in.^3$).

$I_c(3n)$, $S_c(3n)$: Composite moment of inertia and section modulus of the steel and deck based upon 3 times the modular ratio, "3n", used for computing f_s(Total-Strength I, and Service II) in uncracked sections, due to long-term composite (superimposed) dead loads ($in.^4$ and $in.^3$).

$I_c(cr)$, $S_c(cr)$: Composite moment of inertia and section modulus of the steel and longitudinal deck reinforcement, used for computing f_s (Total-Strength I and Service II) in cracked sections, due to both short-term composite live loads and long-term composite (superimposed) dead loads ($in.^4$ and $in.^3$).

S_x : Section modulus about the major axis of a section to the controlling flange, tension or compression, taken as yield moment with respect to the controlling flange over the yield strength of the controlling flange ($in.^3$).

DC1: Un-factored non-composite dead load (kips/ft.).

M_{DC1} : Un-factored moment due to non-composite dead load (kip-ft.).

DC2: Un-factored long-term composite (superimposed excluding future wearing surface) dead load (kips/ft.).

M_{DC2} : Un-factored moment due to long-term composite (superimposed excluding future wearing surface) dead load (kip-ft.).

DW: Un-factored long-term composite (superimposed future wearing surface only) dead load (kips/ft.).

M_{DW} : Un-factored moment due to long-term composite (superimposed future wearing surface only) dead load (kip-ft.).

LLDF: Live Load Distribution Factor for moment and shear computed according to Article 4.6.2.2 and further IDOT provisions.

M_{LL+IM}: Un-factored live load moment plus dynamic load allowance (impact) (kip-ft.).

M_u : Strength I load combination of factored design moments (kip-ft.).
$1.25 (M_{DC1} + M_{DC2}) + 1.5 M_{DW} + 1.75 M_{LL+IM}$

f_ℓ : Factored calculated flange lateral bending stress as calculated using Article 6.10.1.6 and as further simplified by IDOT provisions (ksi).

$\phi_f M_n$: Factored nominal flexural resistance of the section determined as specified in Article 6.10.7.1 or A6 as applicable (kip-ft.).

f_s DC1: Un-factored stress at edge of flange for controlling steel flange due to vertical non-composite dead loads as calculated below (ksi).
M_{DC1} / S_s

f_s DC2: Un-factored stress at edge of flange for controlling steel flange due to vertical composite dead loads as calculated below (ksi).
$M_{DC2} / S_c(3n)$ or $M_{DC2} / S_c(cr)$ as applicable.

f_s DW: Un-factored stress at edge of flange for controlling steel flange due to vertical composite future wearing surface loads as calculated below (ksi).
$M_{DW} / S_c(3n)$ or $M_{DW} / S_c(cr)$ as applicable.

f_s ($_{LL}$ + IM): Un-factored stress at edge of flange for controlling steel flange due to vertical composite live load plus impact loads as calculated below (ksi).
$M_{LL+IM} / S_c(n)$ / M_{LL+IM} / $S_c(cr)$ as applicable.

$f_s + f_\ell/2$ (Service II): Sum of stresses as computed below (ksi).
f_s DC1 + f_s DC2 + f_s DW + 1.3 f_s ($_{LL}$ + IM) + $f_\ell/2$

Service II Resistance: Composite ($0.95R_hF_{yf}$) or noncomposite ($0.80R_hF_{yf}$) stress capacity according to Article 6.10.4.2 (ksi).

$f_s + f_\ell/3$ (Strength I): Sum of stresses as computed below on non-compact sections (ksi).
$1.25 (f_s$ DC1 + f_s DC2) + 1.5 f_s DW + 1.75 f_s ($_{LL}$ + IM) + $f_\ell/3$

$\phi_f F_n$: Factored nominal flexural resistance of the section as specified in Article 6.10.7.2 or 6.10.8 as applicable (ksi).

V_f : Maximum factored shear range in span computed according to Article 6.10.10.

R_{DC1} : Un-factored reaction due to non-composite dead load (kip).

R_{DC2} : Un-factored reaction due to long-term composite (superimposed excluding future wearing surface) dead load (kip).

R_{DW} : Un-factored reaction due to long-term composite (superimposed future wearing surface only) dead load (kip).

R_{LL} : Un-factored live load reaction (kip).

R_{IM} : Un-factored dynamic load allowance (impact) (kip).

R_{Total} (Strength I)(Impact): Strength I load combination of factored design reactions (kip).
$1.25 (R_{DC1} + R_{DC2}) + 1.5R_{DW} + 1.75 (R_{LL} + R_{IM})$

R_{Total} (Strength I)(No Impact): Strength I load combination of factored design reactions, not including dynamic load allowance (Impact) (kip).
$1.25 (R_{DC1} + R_{DC2}) + 1.5R_{DW} + 1.75 (R_{LL})$

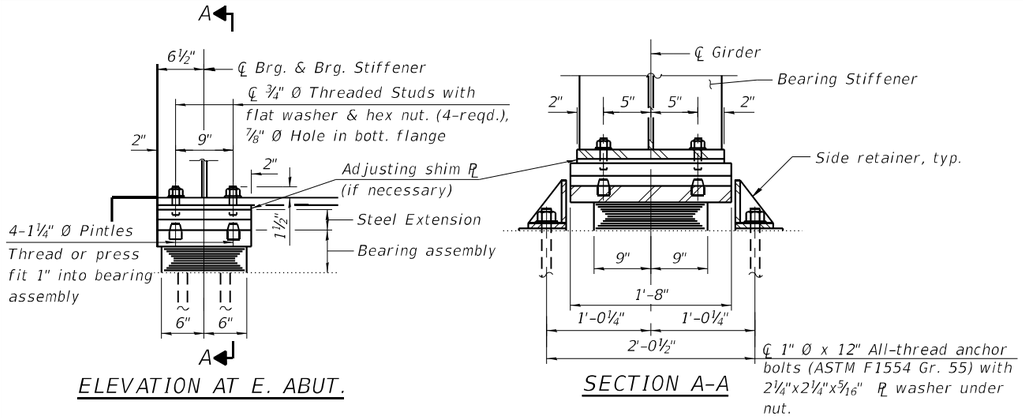

ELEVATION AT E. ABUT.

SECTION A-A

TYPE I ELASTOMERIC EXP. BRG. AT E. ABUT.

(6 Required)

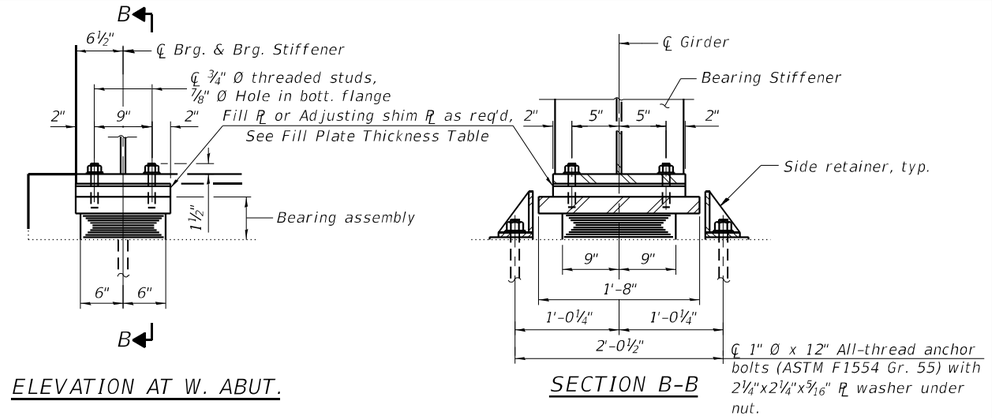

ELEVATION AT W. ABUT.

SECTION B-B

TYPE I ELASTOMERIC EXP. BRG. AT W. ABUT.

(6 Required)

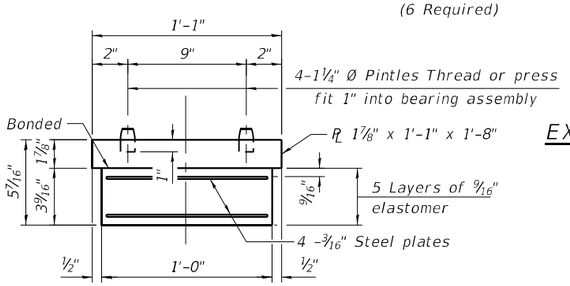

BEARING ASSEMBLY AT E. ABUT.

EXTENSION HEIGHTS TABLE

Beam No.	E. Abut. Dim. 'a'
1	1¼"
2	1¼"
3	1¼"
4	1½"
5	1¼"
6	1¼"

Notes:

Side retainers and stainless steel plates shall be included in the cost of Elastomeric Bearing Assembly, Type I.

Anchor bolts and side retainers at all supports shall be installed as each member is erected unless an equivalent temporary means of lateral restraint is used.

The structural steel plates of the Bearing Assembly, steel extensions and pintles shall conform to the requirements of AASHTO M270 Grade 50.

Two ⅛ in. adjusting shims shall be provided for each bearing in addition to all other plates or shims and placed as shown on bearing details.

Prior to ordering extensions & shims, the Contractor shall field-verify the height between the bottom of girder and its seat at each bearing as this height shall be maintained.

All steel extensions, bearing plates, side retainers, anchor bolts, nuts, washers and pintles shall be galvanized according to AASHTO M111 or M232 as applicable. Cost shall be included with Elastomeric Bearing Assembly, Type I.

Steel extensions, pintles, shim and fill plates shall be included in the contract unit lump sum cost for Furnishing and Erecting Structural Steel.

Shim plates shall not be placed under bearing assembly.

Burn existing anchor bolts flush with existing concrete surface. Grind existing anchor bolt smooth and seal with epoxy. Cost incidental to "Removal of Existing Superstructures No. 1".

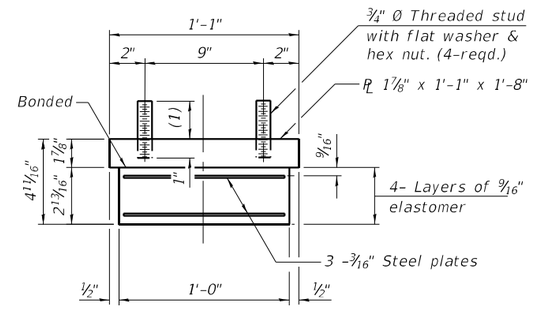

BEARING ASSEMBLY AT W. ABUT.

(1) 3" at Girders 1,2,3,5,6
3½" at Girder 4

FILL PLATE THICKNESS TABLE

Location	W. Abut.
Girder 1	¾"
Girder 2	¾"
Girder 3	¾"
Girder 4	1¼"
Girder 5	¾"
Girder 6	¾"

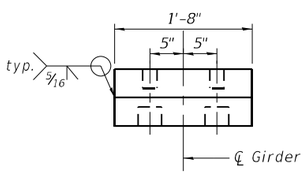

END VIEW STEEL EXTENSION

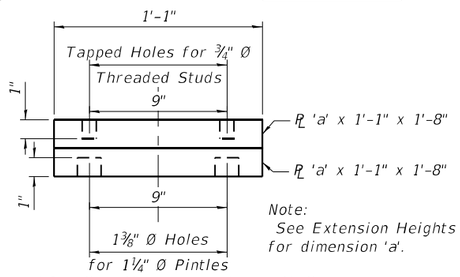

Note:
See Extension Heights Table for dimension 'a'.

ELEVATION STEEL EXTENSION

STEEL EXTENSION DETAIL AT E. ABUT.

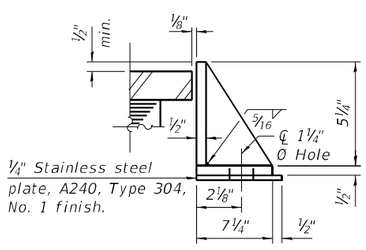

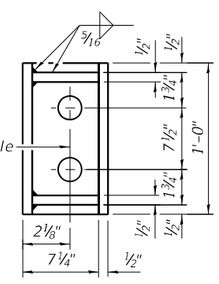

E. ABUT. SIDE RETAINER

Equivalent rolled angle with stiffeners will be allowed in lieu of welded plates.

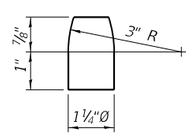

PINTLE

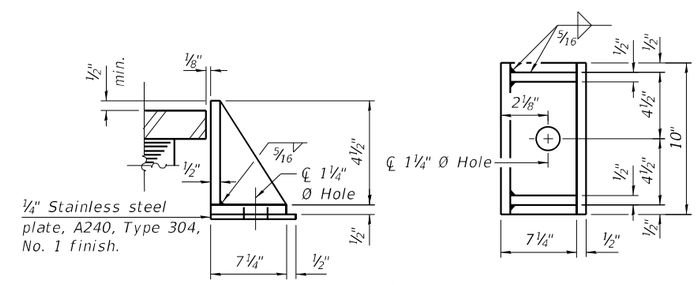

W. ABUT. SIDE RETAINER

Equivalent rolled angle with stiffeners will be allowed in lieu of welded plates.

BILL OF MATERIAL AT WB ABUTMENT BEARINGS

Item	Unit	Total
Elastomeric Bearing Assembly Type I	Each	12
Anchor Bolts, 1"	Each	36

MODEL: Default
FILE NAME: S:\2022\2221L010 - PTB 202-35 - D7 - HMG - I-70 Ph I-III\CADD\CADD Sheets\0120006_0120007-74A01-033-Abut. Brg. D. WB.dgn

QUIGG ENGINEERING INC

USER NAME = JCray	DESIGNED - KFO	REVISED -	
0120006_0120007-74A01-033-Abut. Brg. D. WB.dgn	CHECKED - KWB	REVISED -	
PLOT SCALE =	DRAWN - JDC	REVISED -	
PLOT DATE =	CHECKED - RPW	REVISED -	

STATE OF ILLINOIS
DEPARTMENT OF TRANSPORTATION

WEST AND EAST ABUTMENT BEARING DETAILS (WB)
STRUCTURE NO. 012-0006 (WB)

SHEET 33 OF 45 SHEETS

F.A.I. RTE.	SECTION	COUNTY	TOTAL SHEETS	SHEET NO.
70	(12-53B-1)BR-1	CLARK	93	66
		CONTRACT NO. 74A01		
	ILLINOIS	FED. AID PROJECT		

1/22/2025 10:51:43 AM

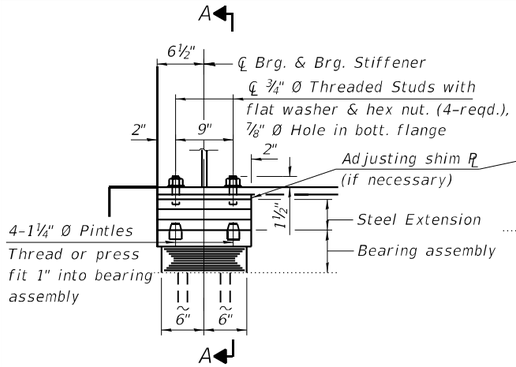

ELEVATION AT E. ABUT.

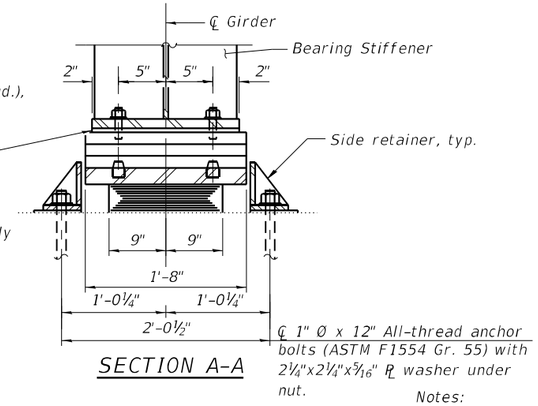

SECTION A-A

TYPE I ELASTOMERIC EXP. BRG. AT E. ABUT.

(6 Required)

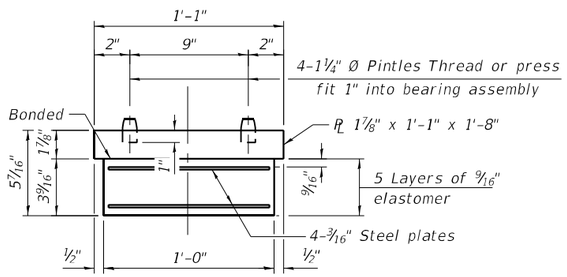

BEARING ASSEMBLY AT E. ABUT.

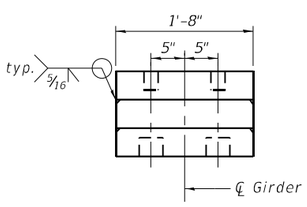

END VIEW STEEL EXTENSION

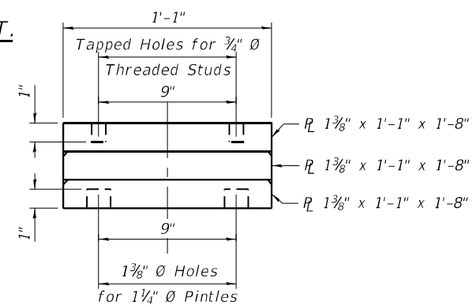

ELEVATION STEEL EXTENSION

STEEL EXTENSION DETAIL AT E. ABUT.

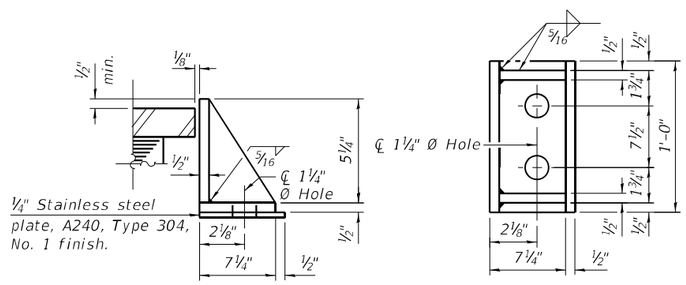

E. ABUT. SIDE RETAINER

Equivalent rolled angle with stiffeners
will be allowed in lieu of welded plates.

Notes:

Side retainers and stainless steel plates shall be included in the cost of Elastomeric Bearing Assembly, Type I.

Anchor bolts and side retainers at all supports shall be installed as each member is erected unless an equivalent temporary means of lateral restraint is used.

The structural steel plates of the Bearing Assembly, steel extensions and pintles shall conform to the requirements of AASHTO M270 Grade 50.

Two ⅛ in. adjusting shims shall be provided for each bearing in addition to all other plates or shims and placed as shown on bearing details.

Prior to ordering extensions & shims, the Contractor shall field-verify the height between the bottom of girder and its seat at each bearing as this height shall be maintained.

All steel extensions, bearing plates, side retainers, anchor bolts, nuts, washers and pintles shall be galvanized according to AASHTO M111 or M232 as applicable. Cost shall be included with Elastomeric Bearing Assembly, Type I.

Steel extensions, shim plates, and pintles shall be included in the contract unit lump sum cost for Furnishing and Erecting Structural Steel.

Shim plates shall not be placed under bearing assembly.

Burn existing anchor bolts flush with existing concrete surface. Grind existing anchor bolt smooth and seal with epoxy. Cost incidental to "Removal of Existing Superstructures No. 2".

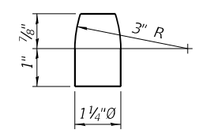

PINTLE

BILL OF MATERIAL
AT EB ABUTMENT BEARINGS

Item	Unit	Total
Elastomeric Bearing Assembly Type I	Each	12
Anchor Bolts, 1"	Each	36

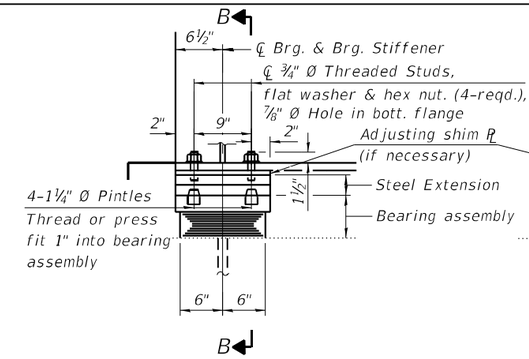

ELEVATION AT W. ABUT.

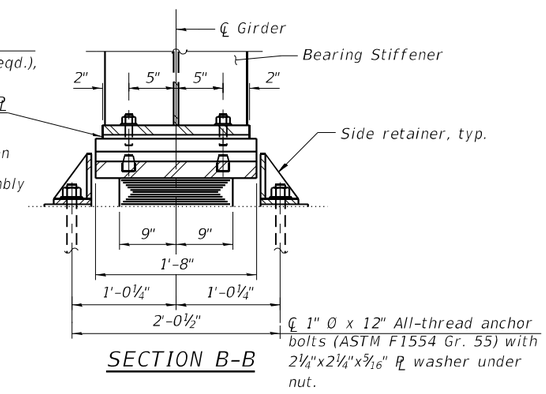

SECTION B-B

TYPE I ELASTOMERIC EXP. BRG. AT W. ABUT.

(6 Required)

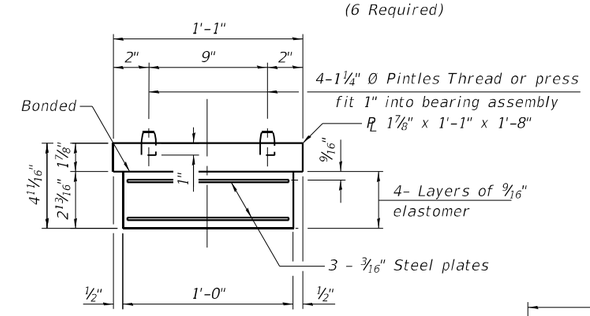

BEARING ASSEMBLY AT W. ABUT.

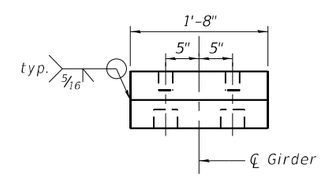

END VIEW STEEL EXTENSION

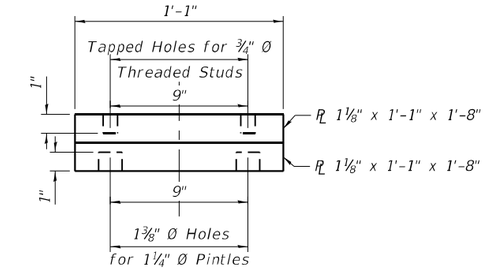

ELEVATION STEEL EXTENSION

STEEL EXTENSION DETAIL AT W. ABUT.

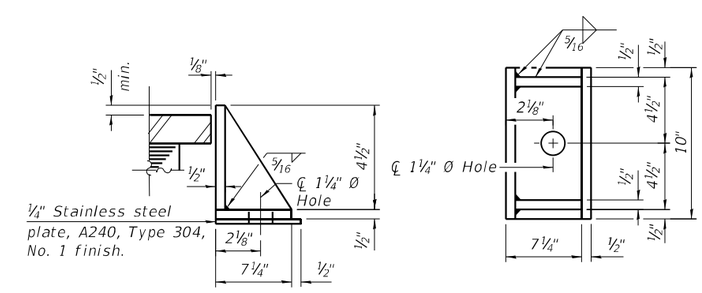

W. ABUT. SIDE RETAINER

Equivalent rolled angle with stiffeners
will be allowed in lieu of welded plates.

MODEL: Default
FILE NAME: S:\2022\2211L010 - PTB 202-35 - D7 - HMG - I-70 Ph I-Ill\CADD\CADD Sheets\0120006_0120007-74A01-034-Abut. Brg. D. EB.dgn
1/22/2025 10:51:54 AM

QUIGG ENGINEERING INC

USER NAME = JCray	DESIGNED - KFO	REVISED -	
0120006_0120007-74A01-034-Abut. Brg. D. EB.dgn	CHECKED - KWB	REVISED -	
PLOT SCALE =	DRAWN - JDC	REVISED -	
PLOT DATE =	CHECKED - RPW	REVISED -	

STATE OF ILLINOIS
DEPARTMENT OF TRANSPORTATION

WEST AND EAST ABUTMENT BEARING DETAILS (EB)
STRUCTURE NO. 012-0007 (EB)

SHEET 34 OF 45 SHEETS

F.A.I. RTE.	SECTION	COUNTY	TOTAL SHEETS	SHEET NO.
70	(12-53B-1)BR-1	CLARK	93	67
		CONTRACT NO. 74A01		
	ILLINOIS	FED. AID PROJECT		

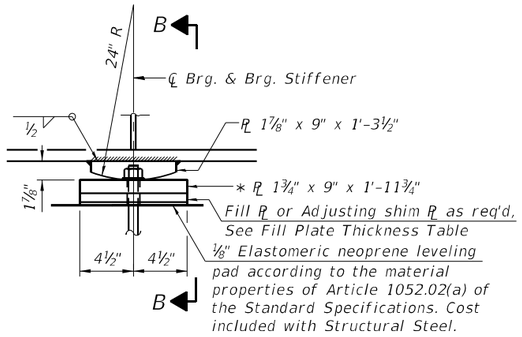

ELEVATION AT PIER 1

* PL 1¾" x 9" x 2'-2" at Girders 11 & 12 Eastbound only.

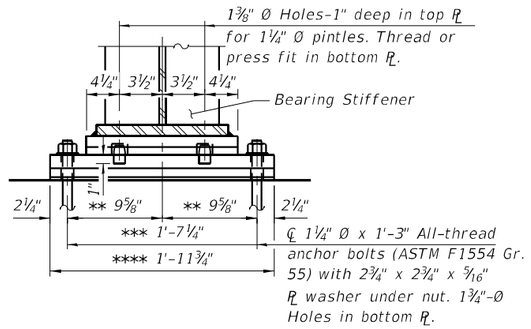

SECTION B-B

** 10¾" at Girders 11 & 12 Eastbound only.
*** 1'-9½" at Girders 11 & 12 Eastbound only.
**** 2'-2" at Girders 11 & 12 Eastbound only.

FIXED BEARING AT PIER 1

(12 Required)

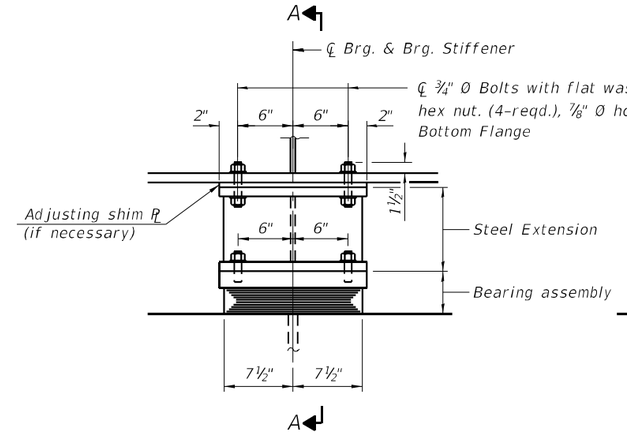

ELEVATION AT PIER 2

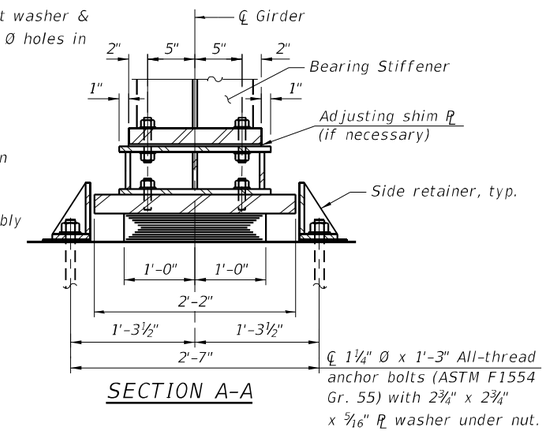

SECTION A-A

TYPE I ELASTOMERIC EXP. BRG. AT PIER 2

(12 Required)

Notes:

Side retainers and stainless steel plates shall be included in the cost of Elastomeric Bearing Assembly, Type I.

Anchor bolts and side retainers at all supports shall be installed as each member is erected unless an equivalent temporary means of lateral restraint is used.

The structural steel plates of the Bearing Assembly, steel extensions and pintles shall conform to the requirements of AASHTO M270 Grade 50.

Two ⅛ in. adjusting shims shall be provided for each bearing in addition to all other plates or shims and placed as shown on bearing details.

Prior to ordering extensions & shims, the Contractor shall field-verify the height between the bottom of girder and its seat at each bearing as this height shall be maintained.

All steel extensions, bearing plates, side retainers, anchor bolts, nuts, washers and pintles shall be galvanized according to AASHTO M111 or M232 as applicable. Cost shall be included with Elastomeric Bearing Assembly, Type I.

Steel extensions, pintles, shim and fill plates shall be included in the contract unit lump sum cost for Furnishing and Erecting Structural Steel.

Burn existing anchor bolts flush with existing concrete surface. Grind existing anchor bolt smooth and seal with epoxy. Cost incidental to "Removal of Existing Superstructures No. 1" or "Removal of Existing Superstructures No. 2".

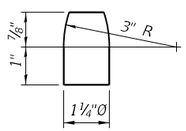

PINTLE

FILL PLATE THICKNESS TABLE

Location	Pier 1	Location	Pier 1
Girder 1	1¼"	Girder 7	1¼"
Girder 2	1¼"	Girder 8	1¼"
Girder 3	1¼"	Girder 9	1¼"
Girder 4	1⅞"	Girder 10	1¼"
Girder 5	1¼"	Girder 11	1¼"
Girder 6	1¼"	Girder 12	1¼"

EXTENSION HEIGHTS TABLE

Beam No.	Pier 2 Dim. 'h'	Beam No.	Pier 2 Dim. 'h'
1	10⅜"	7	10⅜"
2	10⅜"	8	10⅜"
3	10⅝"	9	10⅜"
4	10⅞"	10	10⅜"
5	10⅜"	11	10⅜"
6	10⅜"	12	10⅜"

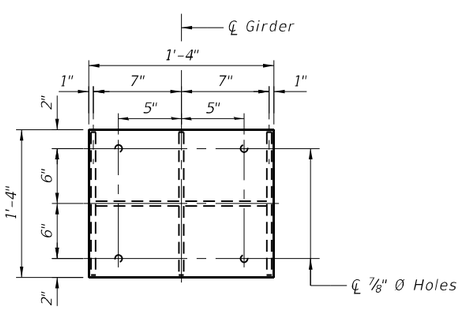

PLAN STEEL EXTENSION

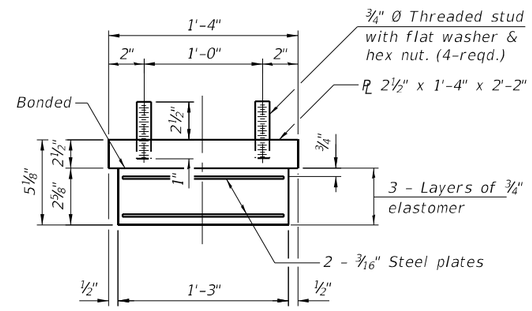

BEARING ASSEMBLY

Note:

Shim plates shall not be placed under bearing assembly.

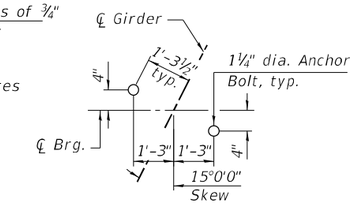

PIER 2 ANCHOR BOLT LAYOUT

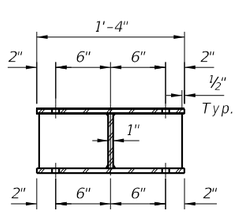

SECTION C-C

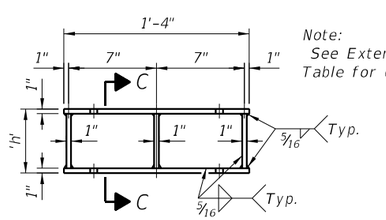

Note:

See Extension Heights Table for dimension 'h'.

ELEVATION STEEL EXTENSION

STEEL EXTENSION DETAIL

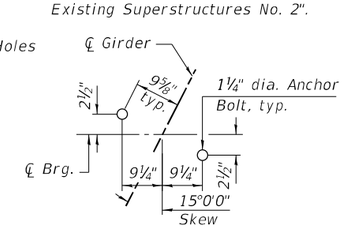

PIER 1 ANCHOR BOLT LAYOUT

(At Girders 1 thru 10)

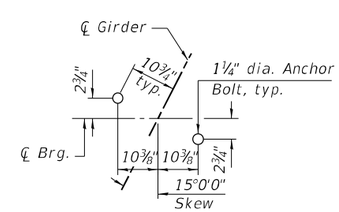

PIER 1 ANCHOR BOLT LAYOUT

(At Girders 11 & 12)

BILL OF MATERIAL AT PIERS

Item	Unit	Total
Elastomeric Bearing Assembly Type I	Each	12
Anchor Bolts, 1¼"	Each	48

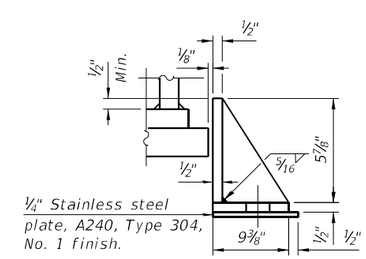

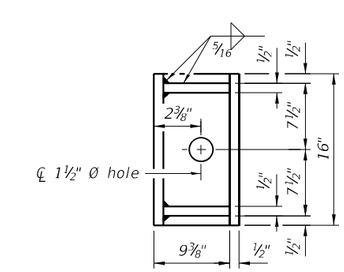

SIDE RETAINER

Equivalent rolled angle with stiffeners will be allowed in lieu of welded plates.

MODEL: Default
FILE NAME: S:\2022\221L010 - PTB 202-35 - D7 - HMG - I-70 Ph I-Ill\CADD\CADD Sheets\0120006_0120007-74A01-035-Pier Brg. Details.dgn
1/22/2025 10:52:04 AM

QUIGG ENGINEERING INC

USER NAME = JCray	DESIGNED - KFO	REVISED -	
0120006_0120007-74A01-035-Pier Brg. Details.dgn	CHECKED - KWB	REVISED -	
PLOT SCALE =	DRAWN - JDC	REVISED -	
PLOT DATE =	CHECKED - RPW	REVISED -	

STATE OF ILLINOIS
DEPARTMENT OF TRANSPORTATION

PIER BEARING DETAILS
STRUCTURE NO. 012-0006 (WB) & 012-0007 (EB)

SHEET 35 OF 45 SHEETS

F.A.I. RTE.	SECTION	COUNTY	TOTAL SHEETS	SHEET NO.
70	(12-53B-1)BR-1	CLARK	93	68

CONTRACT NO. 74A01

ILLINOIS | FED. AID PROJECT

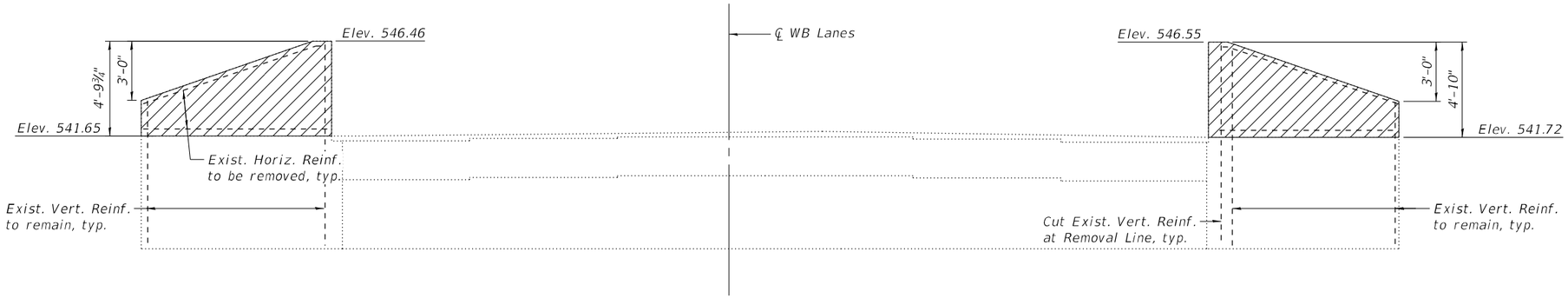

ELEVATION

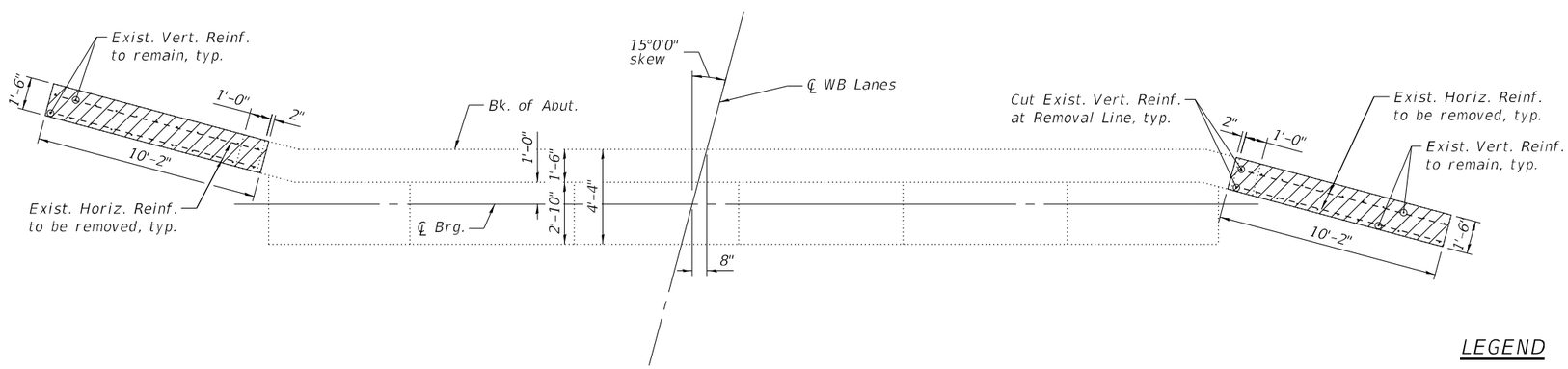

PLAN

Notes:
Existing bars to remain shall be cleaned, straightened and incorporated into the new construction. Cost included with concrete removal.

LEGEND

Concrete Removal Limits

BILL OF MATERIAL

ITEM	UNIT	TOTAL
Concrete Removal	Cu. Yd.	3.9

QUIGG ENGINEERING INC	USER NAME = JCray	DESIGNED - KFO	REVISED -
	0120006_0120007-74A01-036-W. Abut. R. WB.dgn	CHECKED - KWB	REVISED -
	PLOT SCALE =	DRAWN - JDC	REVISED -
	PLOT DATE =	CHECKED - RPW	REVISED -

STATE OF ILLINOIS
DEPARTMENT OF TRANSPORTATION

WEST ABUTMENT CONCRETE REMOVAL (WB)
STRUCTURE NO. 012-0006 (WB)

SHEET 36 OF 45 SHEETS

F.A.I. RTE.	SECTION	COUNTY	TOTAL SHEETS	SHEET NO.
70	(12-53B-1)BR-1	CLARK	93	69
		CONTRACT NO. 74A01		
	ILLINOIS	FED. AID PROJECT		

MODEL: Default
FILE NAME: S:\2022\22IL010 - PTB 202-35 - D7 - HMG - I-70 Ph I-Ill\CADD\CADD Sheets\0120006_0120007-74A01-036-W. Abut. R. WB.dgn
1/22/2025 10:52:14 AM

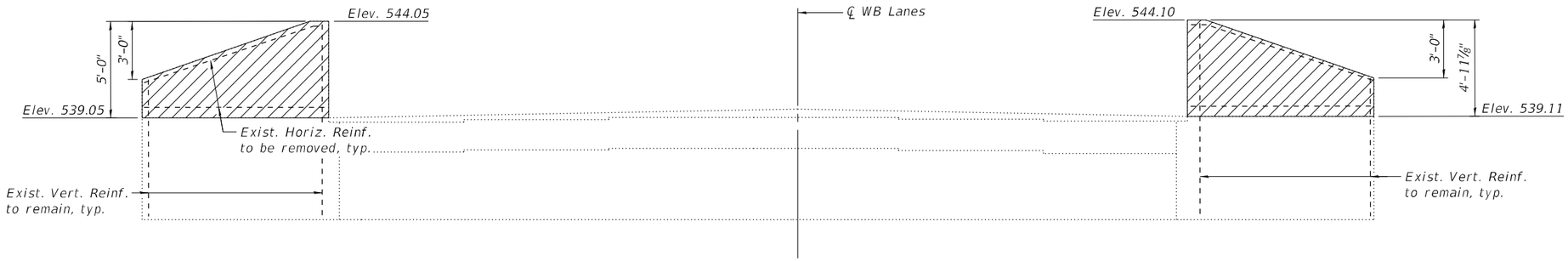

ELEVATION

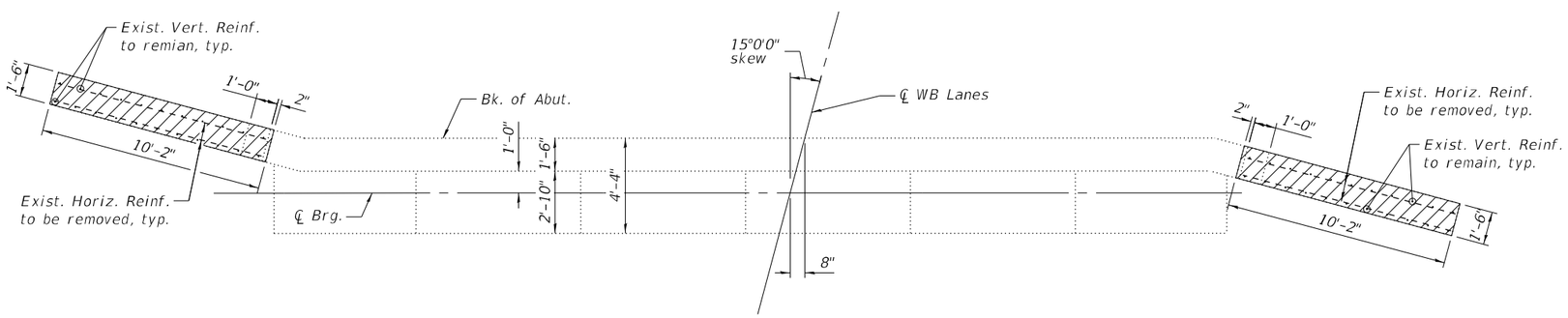

PLAN

Notes:
Existing bars to remain shall be cleaned, straightened and incorporated into the new construction. Cost included with concrete removal.

LEGEND

Concrete Removal Limits

BILL OF MATERIAL

ITEM	UNIT	TOTAL
Concrete Removal	Cu. Yd.	4.1

MODEL: Default
FILE NAME: S:\2022\2211L010 - PTB 202-35 - D7 - HMG - I-70 Ph I-Ill\CADD\CADD Sheets\0120006_0120007-74A01-037-E, Abut. R. WB.dgn
1/22/2025 10:52:22 AM

QUIGG ENGINEERING INC

USER NAME = JCray	DESIGNED - KFO	REVISED -	
0120006_0120007-74A01-037-E, Abut. R. WB.dgn	CHECKED - KWB	REVISED -	
PLOT SCALE =	DRAWN - JDC	REVISED -	
PLOT DATE =	CHECKED - RPW	REVISED -	

STATE OF ILLINOIS
DEPARTMENT OF TRANSPORTATION

EAST ABUTMENT CONCRETE REMOVAL (WB)
STRUCTURE NO. 012-0006 (WB)

SHEET 37 OF 45 SHEETS

F.A.I. RTE.	SECTION	COUNTY	TOTAL SHEETS	SHEET NO.
70	(12-53B-1)BR-1	CLARK	93	70

CONTRACT NO. 74A01

ILLINOIS FED. AID PROJECT

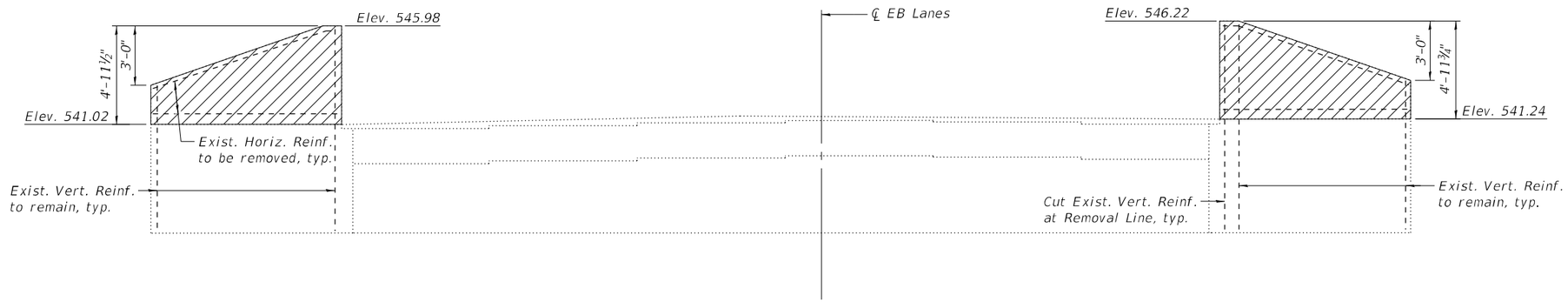

ELEVATION

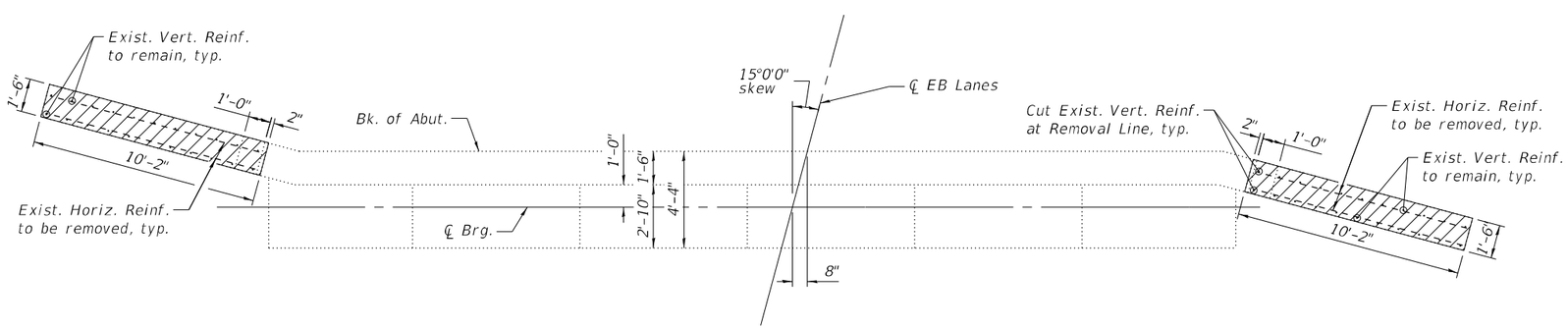

PLAN

Notes:
Existing bars to remain shall be cleaned, straightened and incorporated into the new construction. Cost included with concrete removal.

LEGEND

Concrete Removal Limits

BILL OF MATERIAL

ITEM	UNIT	TOTAL
Concrete Removal	Cu. Yd.	4.1

QUIGG ENGINEERING INC	USER NAME = JCray	DESIGNED - KFO	REVISED -
	0120006_0120007-74A01-038-W. Abut. R. EB.dgn	CHECKED - KWB	REVISED -
	PLOT SCALE =	DRAWN - JDC	REVISED -
	PLOT DATE =	CHECKED - RPW	REVISED -

STATE OF ILLINOIS
DEPARTMENT OF TRANSPORTATION

WEST ABUTMENT CONCRETE REMOVAL (EB)
STRUCTURE NO. 012-0007 (EB)

SHEET 38 OF 45 SHEETS

F.A.I. RTE.	SECTION	COUNTY	TOTAL SHEETS	SHEET NO.
70	(12-53B-1)BR-1	CLARK	93	71

CONTRACT NO. 74A01

ILLINOIS FED. AID PROJECT

MODEL: Default
FILE NAME: S:\2022\2211L010 - PTB 202-35 - D7 - HMG - I-70 Ph I-Ill\CADD\CADD Sheets\0120006_0120007-74A01-038-W. Abut. R. EB.dgn
1/22/2025 10:52:31 AM

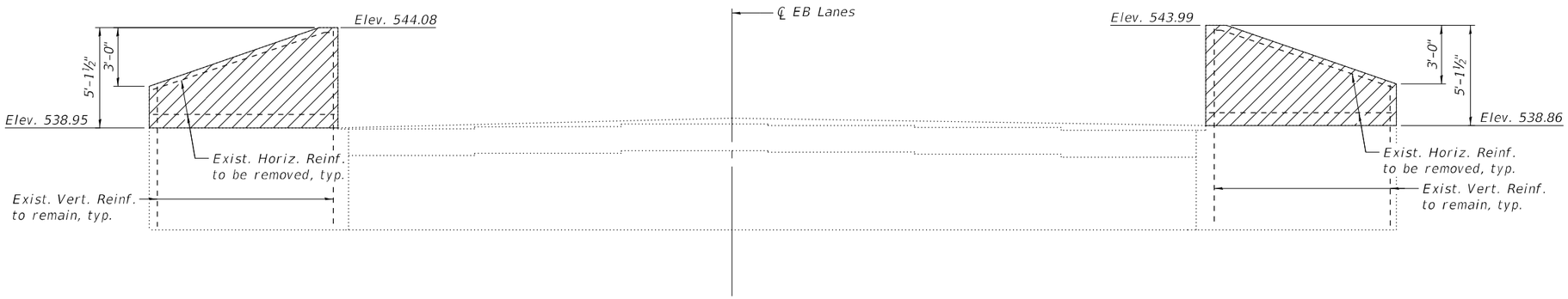

ELEVATION

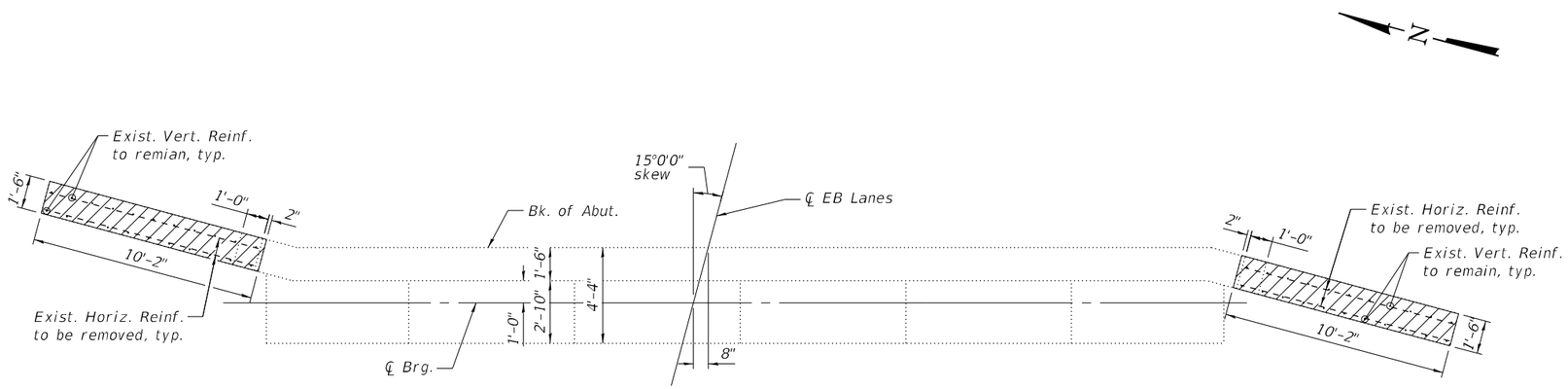

PLAN

Notes:
Existing bars to remain shall be cleaned, straightened and incorporated into the new construction. Cost included with concrete removal.

LEGEND

Concrete Removal Limits

BILL OF MATERIAL

ITEM	UNIT	TOTAL
Concrete Removal	Cu. Yd.	4.2

QUIGG ENGINEERING INC

USER NAME = JCray	DESIGNED - KFO	REVISED -	
0120006_0120007-74A01-039-E, Abut. R. EB.dgn	CHECKED - KWB	REVISED -	
PLOT SCALE =	DRAWN - JDC	REVISED -	
PLOT DATE =	CHECKED - RPW	REVISED -	

STATE OF ILLINOIS
DEPARTMENT OF TRANSPORTATION

EAST ABUTMENT CONCRETE REMOVAL (EB)
STRUCTURE NO. 012-0007 (EB)

SHEET 39 OF 45 SHEETS

F.A.I. RTE.	SECTION	COUNTY	TOTAL SHEETS	SHEET NO.
70	(12-53B-1)BR-1	CLARK	93	72

CONTRACT NO. 74A01

ILLINOIS FED. AID PROJECT

MODEL: Default
FILE NAME: S:\2022\2211L010 - PTB 202-35 - D7 - HMG - I-70 Ph I-Ill\CADD\CADD Sheets\0120006_0120007-74A01-039-E, Abut. R. EB.dgn
1/22/2025 10:52:39 AM

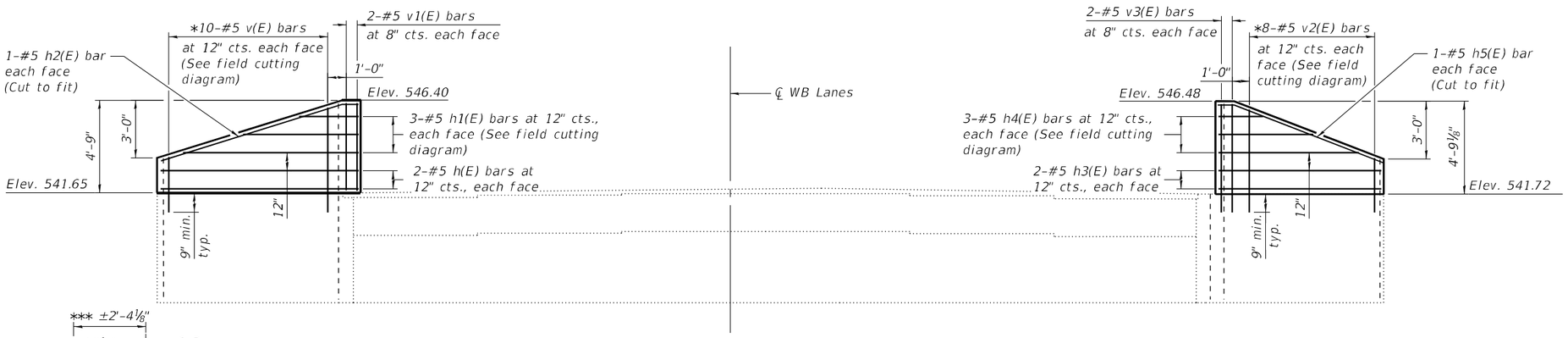

ELEVATION

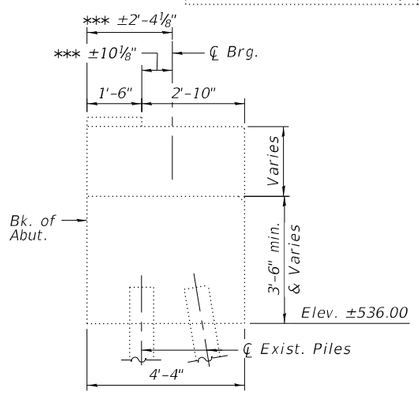

SECTION THRU ABUTMENT

(Horiz. dim. @ Rt. ∠)

* Drill and grout bars 9" min. into existing wingwall according to Section 584 of the Standard Specifications.

** Field Verify lateral offset of edge of cap from ℄ Girder.

*** See Top of Slab Elevations Tables for exact Stations and Offsets of ℄ Bearing of each girder.

**** Prior to ordering materials, the Contractor shall field-verify the wingwall length.

Notes:

Drilling and grouting bars included in the cost of Reinforcement Bars, Epoxy Coated.

Existing vertical reinforcement to be reused may be cut to fit into the new construction if necessary.

Existing reinforcement shall be cleaned, straightened and incorporated into the new construction. Cost included with Concrete Removal.

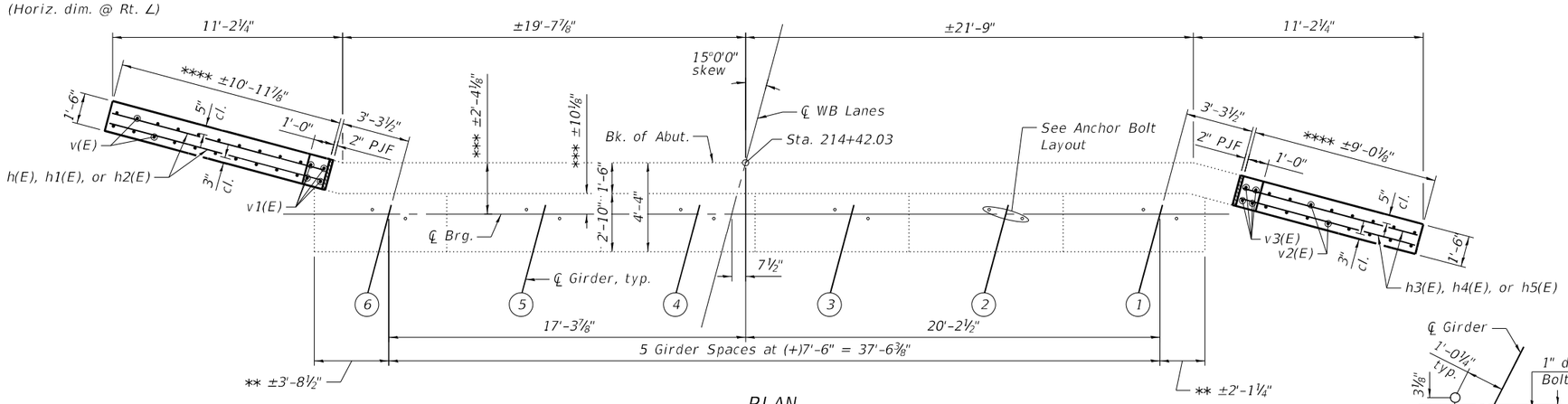

PLAN

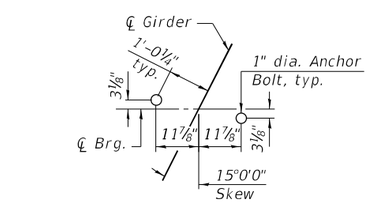

ANCHOR BOLT LAYOUT

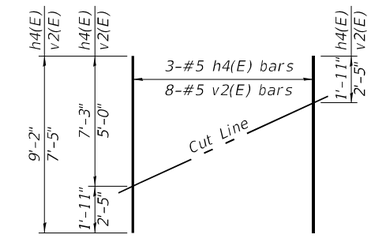

FIELD CUTTING DIAGRAM

Order h4(E) and v2(E) full length. Cut as shown.

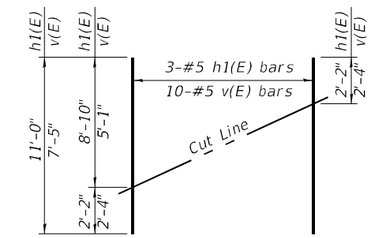

FIELD CUTTING DIAGRAM

Order h1(E) and v(E) full length. Cut as shown.

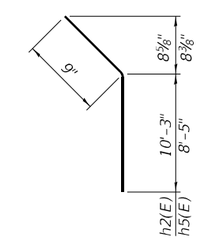

BAR h2(E) & h5(E)

BILL OF MATERIAL

Bar	No.	Size	Length	Shape
h(E)	4	#5	10'-7"	
h1(E)	3	#5	11'-0"	
h2(E)	2	#5	11'-0"	
h3(E)	4	#5	8'-8"	
h4(E)	3	#5	9'-2"	
h5(E)	2	#5	9'-2"	
v(E)	10	#5	7'-5"	
v1(E)	4	#5	4'-5"	
v2(E)	8	#5	7'-5"	
v3(E)	4	#5	5'-4"	
Structure Excavation			Cu. Yd.	134
Concrete Structures			Cu. Yd.	3.8
Reinforcement Bars, Epoxy Coated			Pound	370

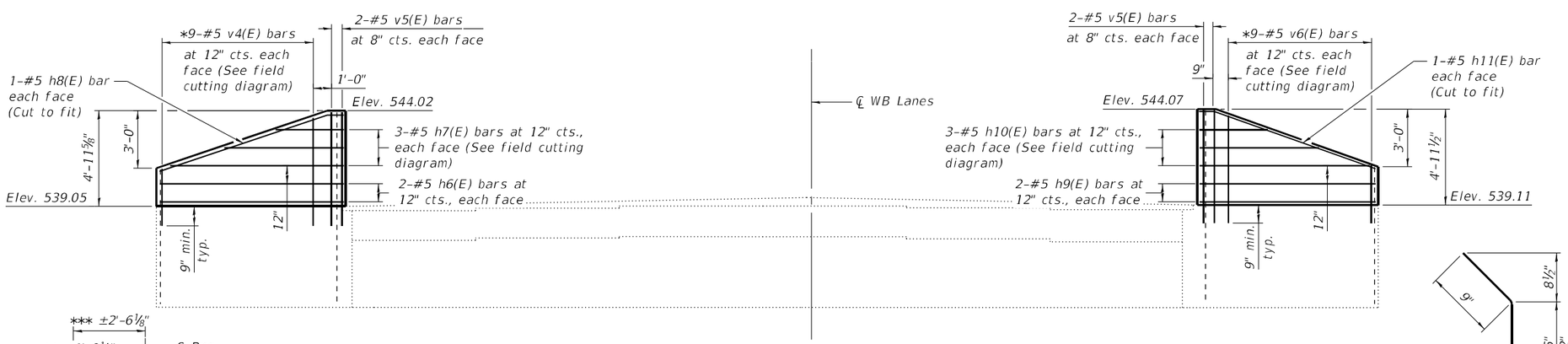

ELEVATION

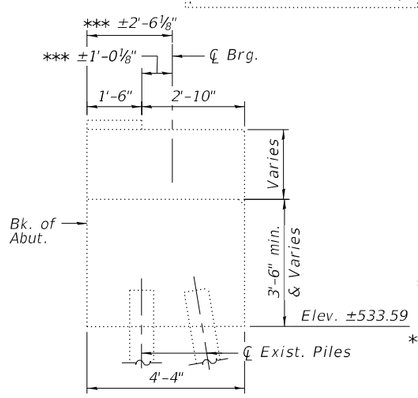

SECTION THRU ABUTMENT

(Horiz. dim. @ Rt. ∠)

* Drill and grout bars 9" min. into existing wingwall according to Section 584 of the Standard Specifications.

** Field Verify lateral offset of edge of cap from ℄ Girder.

*** See Top of Slab Elevations Tables for exact Stations and Offsets of ℄ Bearing of each girder.

**** Prior to ordering materials, the Contractor shall field-verify the wingwall length.

Notes:

Drilling and grouting bars included in the cost of Reinforcement Bars, Epoxy Coated.

Existing vertical reinforcement to be reused may be cut to fit into the new construction if necessary.

Existing reinforcement shall be cleaned, straightened and incorporated into the new construction. Cost included with Concrete Removal.

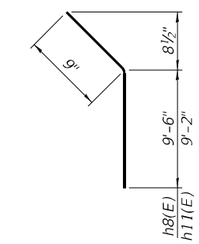

BAR h8(E) & h11(E)

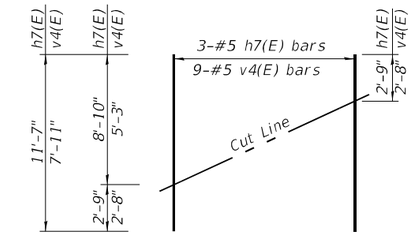

FIELD CUTTING DIAGRAM

Order h7(E) and v4(E) full length. Cut as shown.

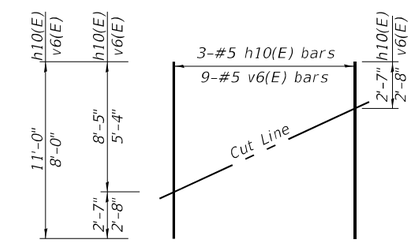

FIELD CUTTING DIAGRAM

Order h10(E) and v6(E) full length. Cut as shown.

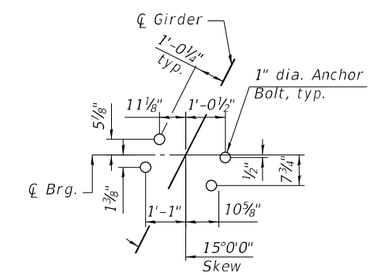

ANCHOR BOLT LAYOUT

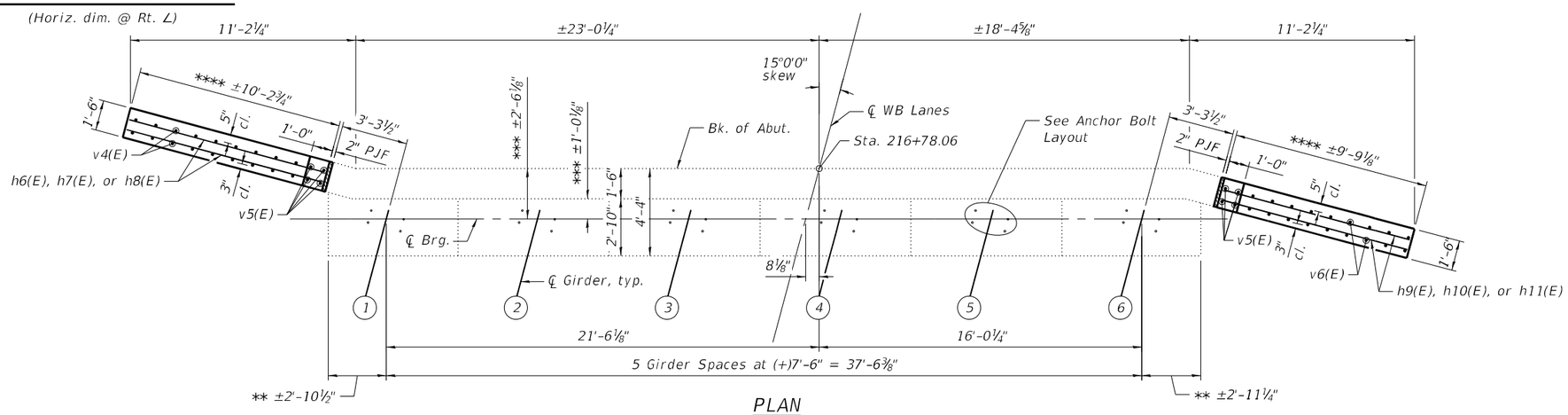

PLAN

BILL OF MATERIAL

Bar	No.	Size	Length	Shape
h6(E)	4	#5	9'-10"	
h7(E)	3	#5	11'-7"	
h8(E)	2	#5	10'-3"	
h9(E)	4	#5	9'-5"	
h10(E)	3	#5	11'-0"	
h11(E)	2	#5	9'-11"	
v4(E)	9	#5	7'-11"	
v5(E)	8	#5	5'-6"	
v6(E)	9	#5	8'-0"	
Structure Excavation			Cu. Yd.	134
Concrete Structures			Cu. Yd.	4.1
Reinforcement Bars, Epoxy Coated			Pound	390

MODEL: Default
FILE NAME: S:\2022\22IL010 - PTB 202-35 - D7 - HMG - I-70 Ph I-H\CADD\CADD Sheets\0120006_0120007-74A01-041-E, Abut. Mod. WB.dgn
1/22/2025 10:52:58 AM

QUIGG ENGINEERING INC

USER NAME = JCray	DESIGNED - KFO	REVISED -	
0120006_0120007-74A01-041-E, Abut. Mod. WB.dgn	CHECKED - KWB	REVISED -	
PLOT SCALE =	DRAWN - JDC	REVISED -	
PLOT DATE =	CHECKED - RPW	REVISED -	

STATE OF ILLINOIS
DEPARTMENT OF TRANSPORTATION

EAST ABUTMENT MODIFICATIONS (WB)
STRUCTURE NO. 012-0006 (WB)

SHEET 41 OF 45 SHEETS

F.A.I. RTE.	SECTION	COUNTY	TOTAL SHEETS	SHEET NO.
70	(12-53B-1)BR-1	CLARK	93	74
		CONTRACT NO. 74A01		
	ILLINOIS	FED. AID PROJECT		

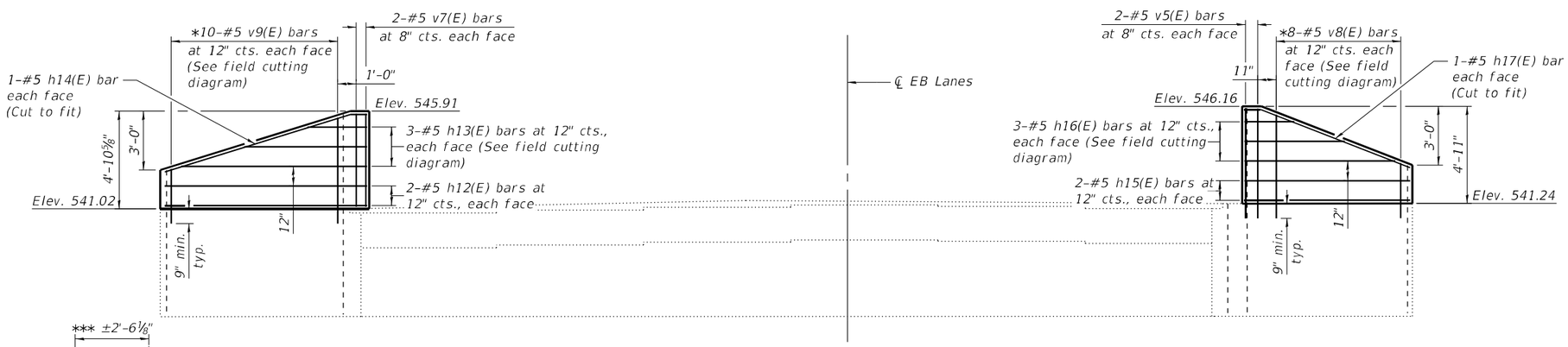

ELEVATION

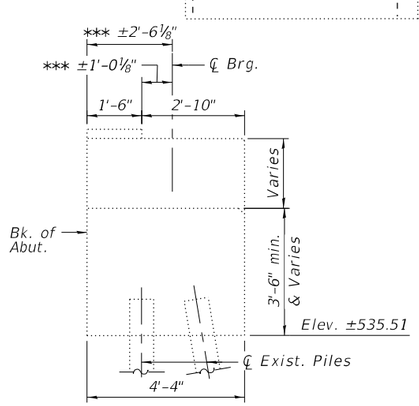

SECTION THRU ABUTMENT

(Horiz. dim. @ Rt. ∠)

* Drill and grout bars 9" min. into existing wingwall according to Section 584 of the Standard Specifications.

** Field Verify lateral offset of edge of cap from ℄ Girder.

*** See Top of Slab Elevations Tables for exact Stations and Offsets of ℄ Bearing of each girder.

**** Prior to ordering materials, the Contractor shall field-verify the wingwall length.

Notes:

Drilling and grouting bars included in the cost of Reinforcement Bars, Epoxy Coated.

Existing vertical reinforcement to be reused may be cut to fit into the new construction if necessary.

Existing reinforcement shall be cleaned, straightened and incorporated into the new construction. Cost included with Concrete Removal.

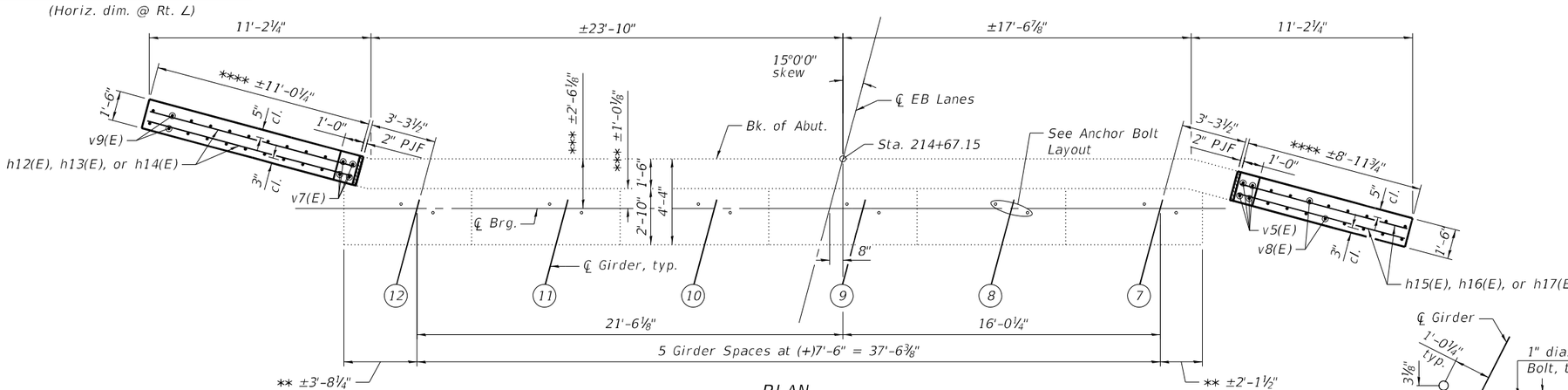

PLAN

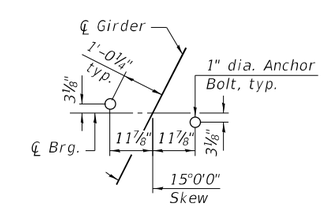

ANCHOR BOLT LAYOUT

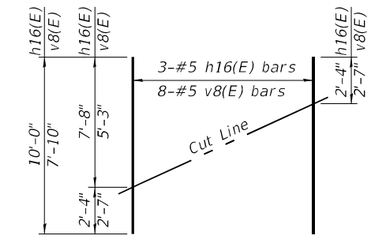

FIELD CUTTING DIAGRAM

Order h16(E) and v8(E) full length. Cut as shown.

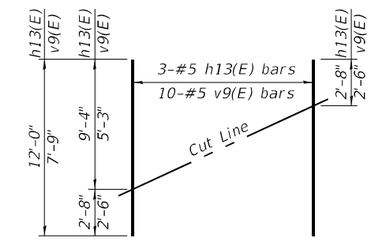

FIELD CUTTING DIAGRAM

Order h13(E) and v9(E) full length. Cut as shown.

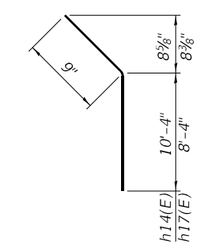

BAR h14(E) & h17(E)

BILL OF MATERIAL

Bar	No.	Size	Length	Shape
h12(E)	4	#5	10'-8"	
h13(E)	3	#5	12'-0"	
h14(E)	2	#5	11'-1"	
h15(E)	4	#5	8'-7"	
h16(E)	3	#5	10'-0"	
h17(E)	2	#5	9'-1"	
v5(E)	4	#5	5'-6"	
v7(E)	4	#5	4'-6"	
v8(E)	8	#5	7'-10"	
v9(E)	10	#5	7'-9"	
Structure Excavation			Cu. Yd.	136
Concrete Structures			Cu. Yd.	4.0
Reinforcement Bars, Epoxy Coated			Pound	380

MODEL: Default
FILE NAME: S:\2022\2\2IL010 - PTB 202-35 - D7 - HMG - I-70 Ph II\CADD\CADD Sheets\0120006_0120007-74A01-042-W. Abut. Mod. EB.dgn

QUIGG ENGINEERING INC

USER NAME = JCray	DESIGNED - KFO	REVISED -	
0120006_0120007-74A01-042-W. Abut. Mod. EB.dgn	CHECKED - KWB	REVISED -	
PLOT SCALE =	DRAWN - JDC	REVISED -	
PLOT DATE =	CHECKED - RPW	REVISED -	

STATE OF ILLINOIS
DEPARTMENT OF TRANSPORTATION

WEST ABUTMENT MODIFICATIONS (EB)
STRUCTURE NO. 012-0007 (EB)

SHEET 42 OF 45 SHEETS

F.A.I. RTE.	SECTION	COUNTY	TOTAL SHEETS	SHEET NO.
70	(12-53B-1)BR-1	CLARK	93	75
		CONTRACT NO. 74A01		
		ILLINOIS	FED. AID PROJECT	

1/22/2025 10:53:07 AM

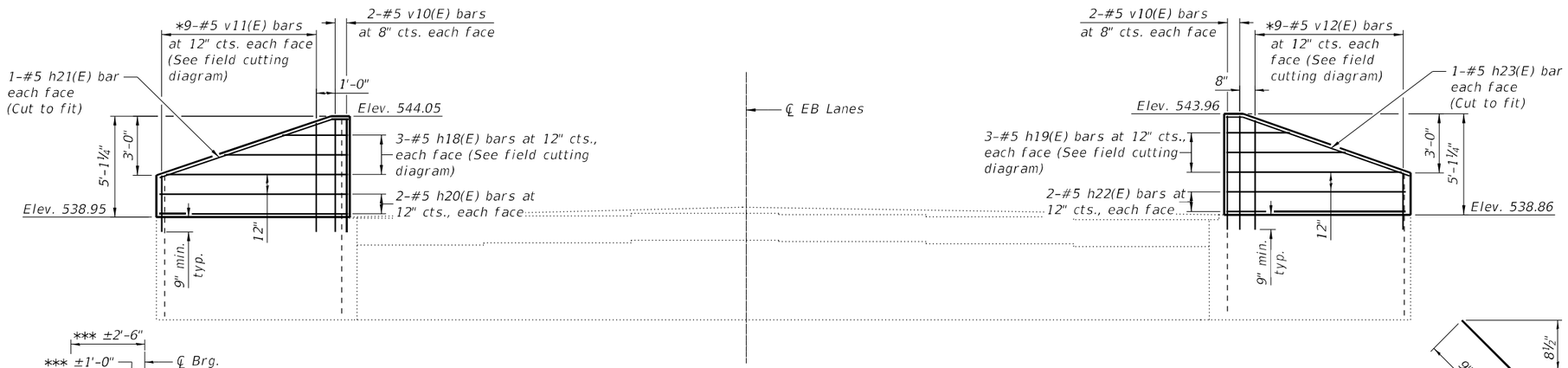

ELEVATION

* Drill and grout bars 9" min. into existing wingwall according to Section 584 of the Standard Specifications.

** Field Verify lateral offset of edge of cap from ℄ Girder.

*** See Top of Slab Elevations Tables for exact Stations and Offsets of ℄ Bearing of each girder.

**** Prior to ordering materials, the Contractor shall field-verify the wingwall length.

Notes:
Drilling and grouting bars included in the cost of Reinforcement Bars, Epoxy Coated.
Existing vertical reinforcement to be reused may be cut to fit into the new construction if necessary.
Existing reinforcement shall be cleaned, straightened and incorporated into the new construction. Cost included with Concrete Removal.

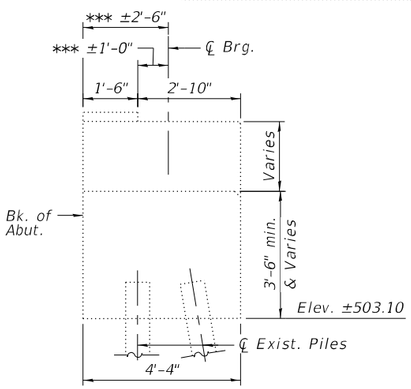

SECTION THRU ABUTMENT

(Horiz. dim. @ Rt. ∠)

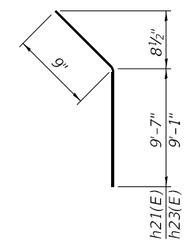

BAR h21(E) & h23(E)

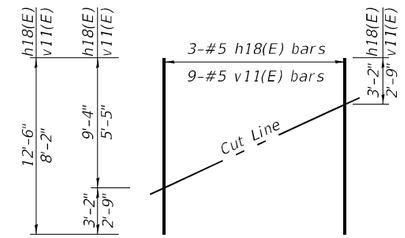

FIELD CUTTING DIAGRAM

Order h18(E) and v11(E) full length. Cut as shown.

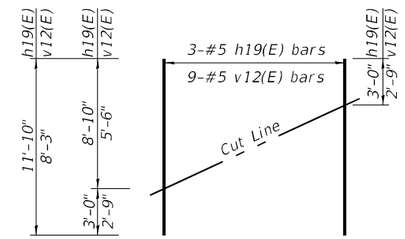

FIELD CUTTING DIAGRAM

Order h19(E) and v12(E) full length. Cut as shown.

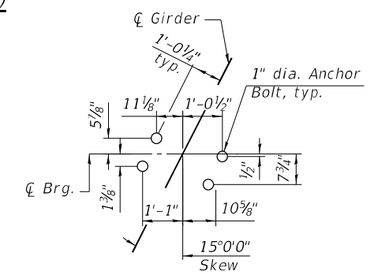

ANCHOR BOLT LAYOUT

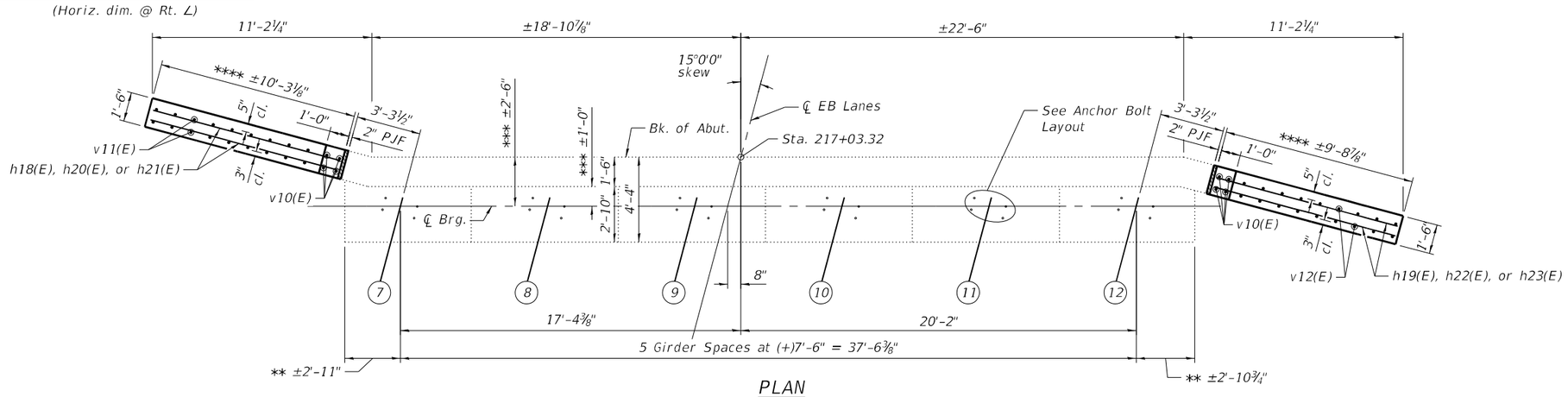

PLAN

BILL OF MATERIAL

Bar	No.	Size	Length	Shape
h18(E)	3	#5	12'-6"	
h19(E)	3	#5	11'-10"	
h20(E)	4	#5	9'-11"	
h21(E)	2	#5	10'-4"	
h22(E)	4	#5	9'-4"	
h23(E)	2	#5	9'-10"	
v10(E)	8	#5	5'-8"	
v11(E)	9	#5	8'-2"	
v12(E)	9	#5	8'-3"	
Structure Excavation			Cu. Yd.	136
Concrete Structures			Cu. Yd.	4.2
Reinforcement Bars, Epoxy Coated			Pound	400

MODEL: Default
FILE NAME: S:\2022\2210\010 - PTB 202-35 - D7 - HMG - I-70 Ph I-H\CADD\CADD Sheets\0120006_0120007-74A01-043-E. Abut. Mod. EB.dgn
1/22/2025 10:53:16 AM

QUIGG ENGINEERING INC

USER NAME = JCray	DESIGNED - KFO	REVISED -	
0120006_0120007-74A01-043-E. Abut. Mod. EB.dgn	CHECKED - KWB	REVISED -	
PLOT SCALE =	DRAWN - JDC	REVISED -	
PLOT DATE =	CHECKED - RPW	REVISED -	

STATE OF ILLINOIS
DEPARTMENT OF TRANSPORTATION

EAST ABUTMENT MODIFICATIONS (EB)
STRUCTURE NO. 012-0007 (EB)

SHEET 43 OF 45 SHEETS

F.A.I. RTE.	SECTION	COUNTY	TOTAL SHEETS	SHEET NO.
70	(12-53B-1)BR-1	CLARK	93	76
		CONTRACT NO. 74A01		
	ILLINOIS	FED. AID PROJECT		

Notes:
All dimensions shall remain the same as shown on superstructure details, except dimension A which is to be revised as shown. Additional concrete needed to revise dimension A = 0.00348 cu. yds./ft. for 39" and 44" parapets.
Place full depth aluminum sheets as shown on superstructure details.
Replace all cork joint filler locations with a full thickness saw cut.
Steel superstructure shown. Other superstructure types similar.

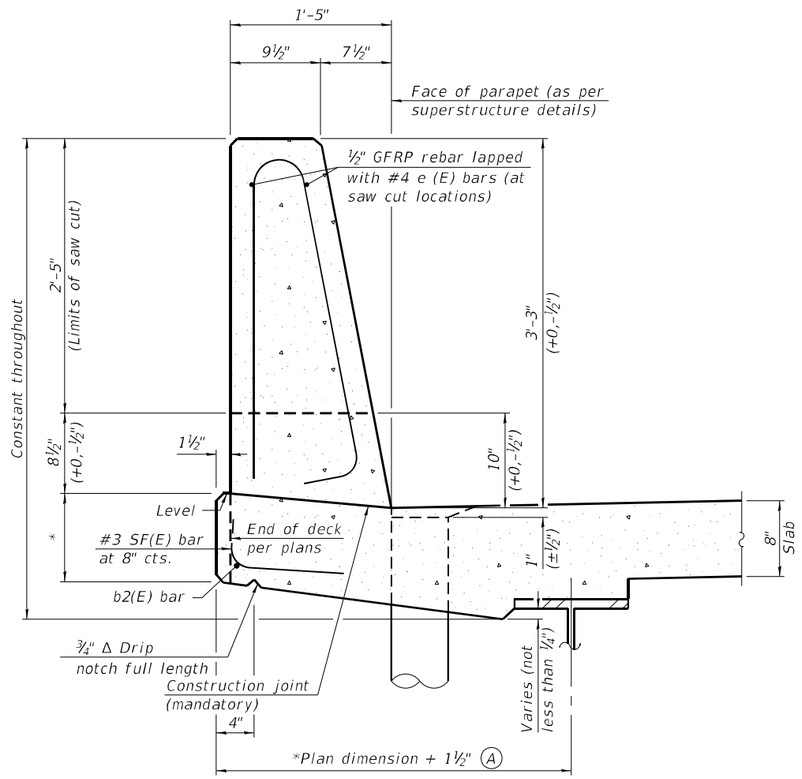

39" CONSTANT-SLOPE PARAPET SECTION

(Showing dimensions, d(E), and ½" Ø GFRP rebar)

*See Superstructure Details.

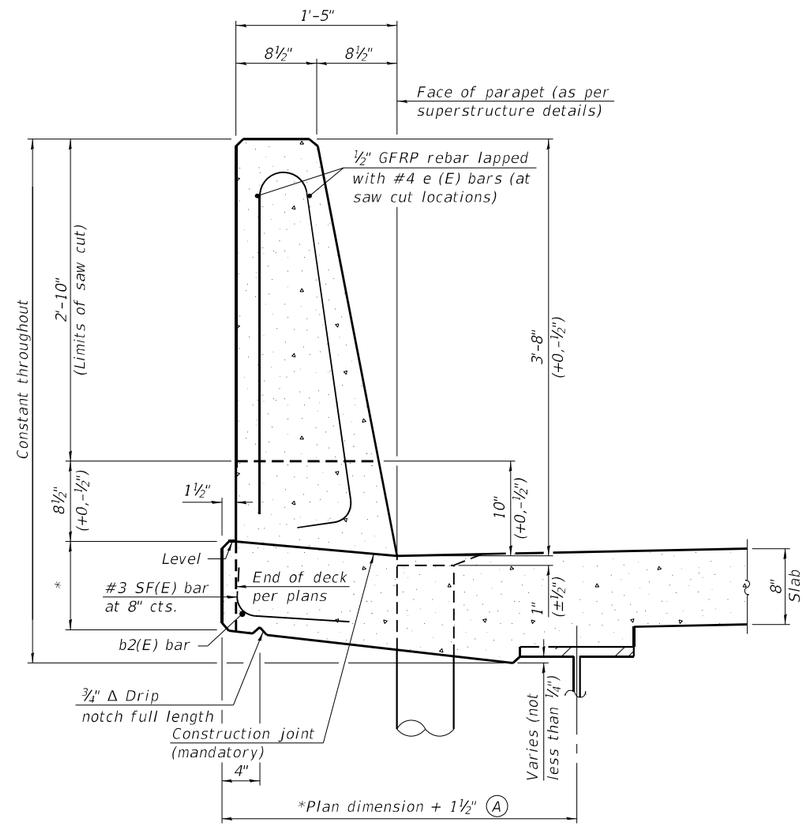

44" CONSTANT-SLOPE PARAPET SECTION

(Showing dimensions, d(E), and ½" Ø GFRP rebar)

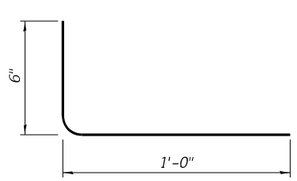

SF(E) BAR

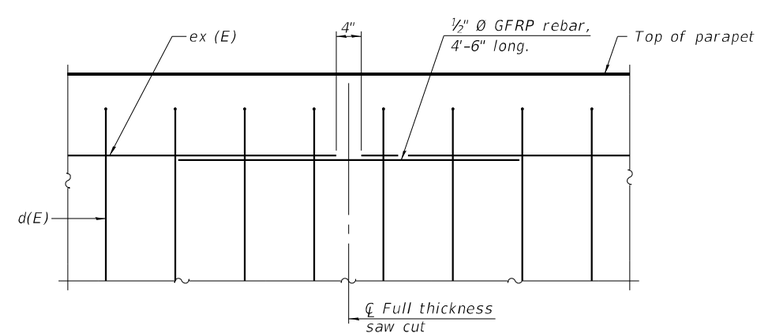

GFRP REBAR STIFFENING DETAIL

(Place as shown in parapet section at each parapet joint location.)

SFP 39-44 11-1-2022

MODEL: Default
FILE NAME: S:\2022\2210010 - PTB 202-35 - D7 - HMG - I-70 Ph I-III\CADD\CADD Sheets\0120006_0120007-74A01-044-Para. Slipform.dgn
1/22/2025 10:53:26 AM

QUIGG ENGINEERING INC

USER NAME = JCray	DESIGNED - KFO	REVISED -	
0120006_0120007-74A01-044-Para. Slipform.dgn	CHECKED - KWB	REVISED -	
PLOT SCALE =	DRAWN - JDC	REVISED -	
PLOT DATE =	CHECKED - RPW	REVISED -	

STATE OF ILLINOIS
DEPARTMENT OF TRANSPORTATION

CONCRETE PARAPET SLIPFORMING OPTION
STRUCTURE NO. 012-0006 (WB) & 012-0007 (EB)
SHEET 44 OF 45 SHEETS

F.A.I. RTE.	SECTION	COUNTY	TOTAL SHEETS	SHEET NO.
70	(12-53B-1)BR-1	CLARK	93	77
		CONTRACT NO. 74A01		
	ILLINOIS	FED. AID PROJECT		

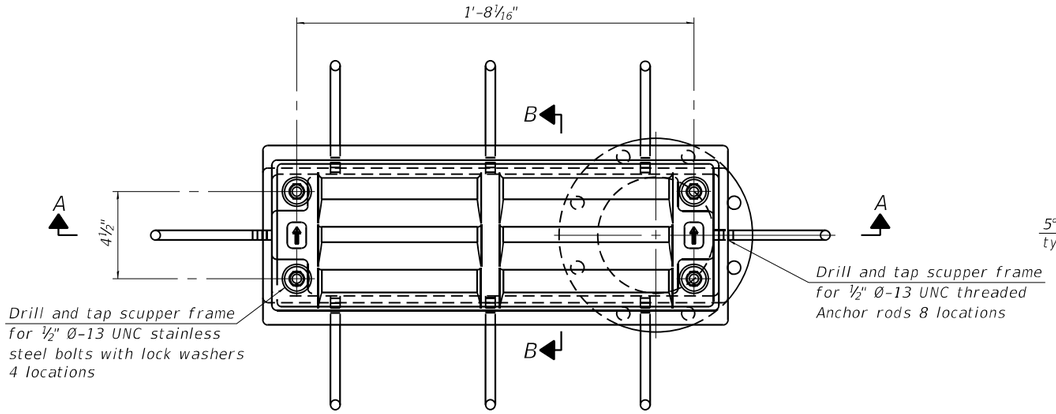

PLAN

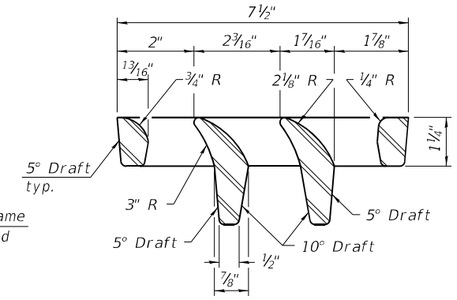

VANE GRATE DETAIL

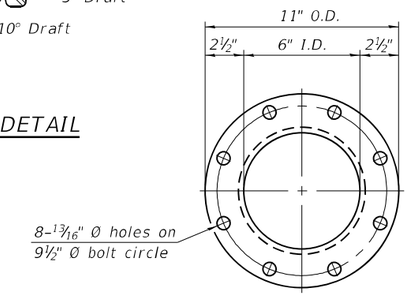

Notes:

All cast iron parts shall be gray iron conforming to the requirements of AASHTO M105, Class 35B and AASHTO M306.

Bolts, anchor rods, nuts and washers shall be according to ASTM A307 and shall be galvanized according to AASHTO M232. As an alternate stainless steel may be used.

Stainless steel hardware shall be according to Article 1006.29(d) of the Standard Specifications.

Structural steel weldments of equal sections and of the same configuration may be substituted for the cast iron scupper frames and downspouts; however, the scupper grates shall remain cast iron. Fillet or full penetration welds shall be used for the weldments. Details shall be submitted to the Engineer for approval.

Structural steel scupper frames and downspouts, when utilized, shall be galvanized according to AASHTO M111.

As an alternate, fiberglass may be used for downspouts according to ASTM D2996 with a short-time rupture strength hoop tensile stress of 30,000 psi min. in lieu of the cast iron or structural steel.

Exterior surfaces of downspouts and exterior exposed surfaces of the scupper frame below deck shall be pigmented or painted to match the color of the adjacent girder.

The Contractor shall take appropriate measures to assure that Protective Coat is not applied to the scupper.

Cost of the grate, frame, downspout, anchor rods, nuts and washers including complete installation of the scupper shall be paid for at the contract unit price for Drainage Scuppers, DS-12.

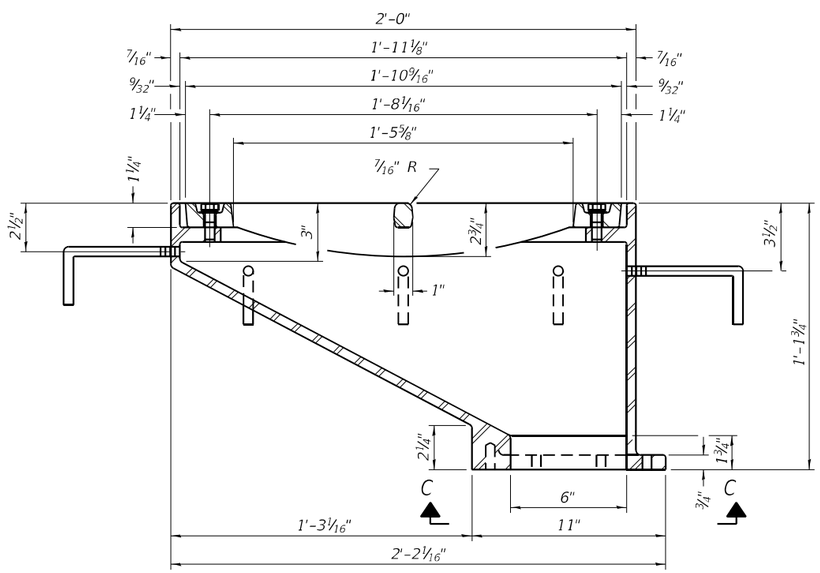

SECTION A-A

See sheet 17 and 21 of 45 for scupper location relative to parapet.

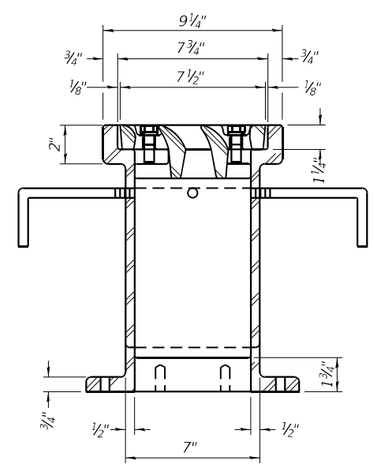

SECTION B-B

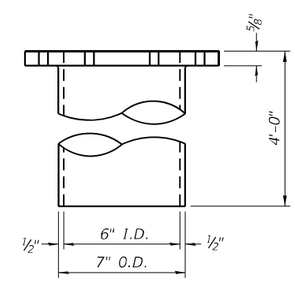

DOWNSPOUT

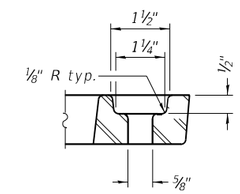

GRATE BOLT HOLE DETAIL

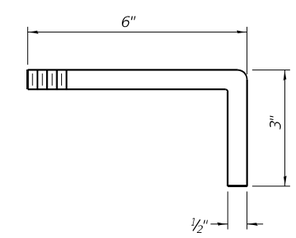

ANCHOR ROD DETAIL

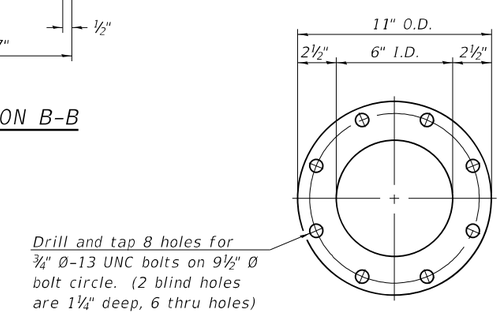

VIEW C-C

BILL OF MATERIAL

ITEM	UNIT	QUANTITY
Drainage Scuppers, DS-12	Each	12

DS-12 2-1-2023

QUIGG ENGINEERING INC

USER NAME = JCray	DESIGNED - KFO	REVISED -	STATE OF ILLINOIS DEPARTMENT OF TRANSPORTATION	DRAINAGE SCUPPERS, DS-12 STRUCTURE NO. 012-0006 (WB) & 012-0007 (EB)	
0120006_0120007-74A01-045-Dr, Scup, DS-12.dgn	CHECKED - KWB	REVISED -			
PLOT SCALE =	DRAWN - JDC	REVISED -			
PLOT DATE =	CHECKED - RPW	REVISED -		SHEET 45 OF 45 SHEETS	

F.A.I. RTE.	SECTION	COUNTY	TOTAL SHEETS	SHEET NO.
70	(12-53B-1)BR-1	CLARK	93	78
		CONTRACT NO. 74A01		
	ILLINOIS	FED. AID PROJECT		

MODEL: Default
FILE NAME: S:\2022\22IL010 - PTB 202-35 - D7 - HMG - I-70 Ph. I-H\CADD\CADD Sheets\0120006_0120007-74A01-045-Dr, Scup, DS-12.dgn
1/22/2025 10:53:34 AM

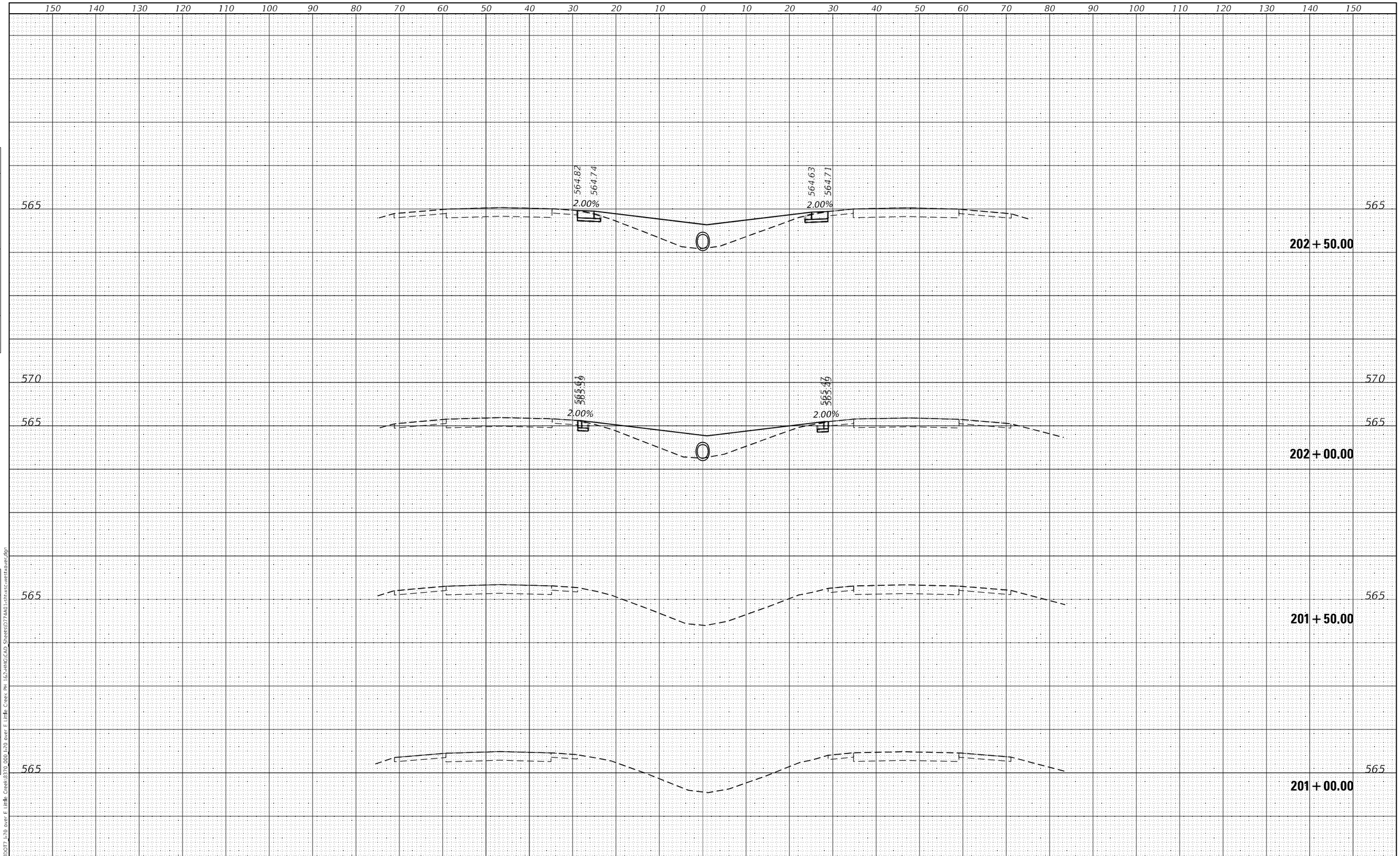

FINAL SURVEY		BY	DATE
NOTE BOOK	SURVEYED		
	PLOTTED		
	TEMPLATE		
	AREAS		
NO.	AREAS CHECKED		

ORIGINAL SURVEY		BY	DATE
NOTE BOOK	SURVEYED		
	PLOTTED		
	TEMPLATE		
	AREAS		
NO.	AREAS CHECKED		

MODEL: Default
FILE NAME: H:\8370 IDOT I-70 over E Little Creek\8370_000 I-70 over E Little Creek PH 1&2-HMG\CAD Sheets\0774A01-sht-xsc-westover.dgn

HMG
ENGINEERS
IL PROF DESIGN FIRM 184.000899

USER NAME = tkruep	DESIGNED -	REVISED -
	DRAWN -	REVISED -
PLOT SCALE = 20.0000 ' / in.	CHECKED -	REVISED -
PLOT DATE = 1/27/2025	DATE -	REVISED -

STATE OF ILLINOIS
DEPARTMENT OF TRANSPORTATION

CROSS SECTIONS
WEST CROSSOVER

SCALE: 1" = 10' | SHEET 1 OF 7 SHEETS | STA. 201+00.00 TO STA. 202+50.00

F.A.I. RTE.	SECTION	COUNTY	TOTAL SHEETS	SHEET NO.
70	(12-53B-1)BR-1	CLARK	93	79
		CONTRACT NO. 74A01		
		ILLINOIS	FED. AID PROJECT	

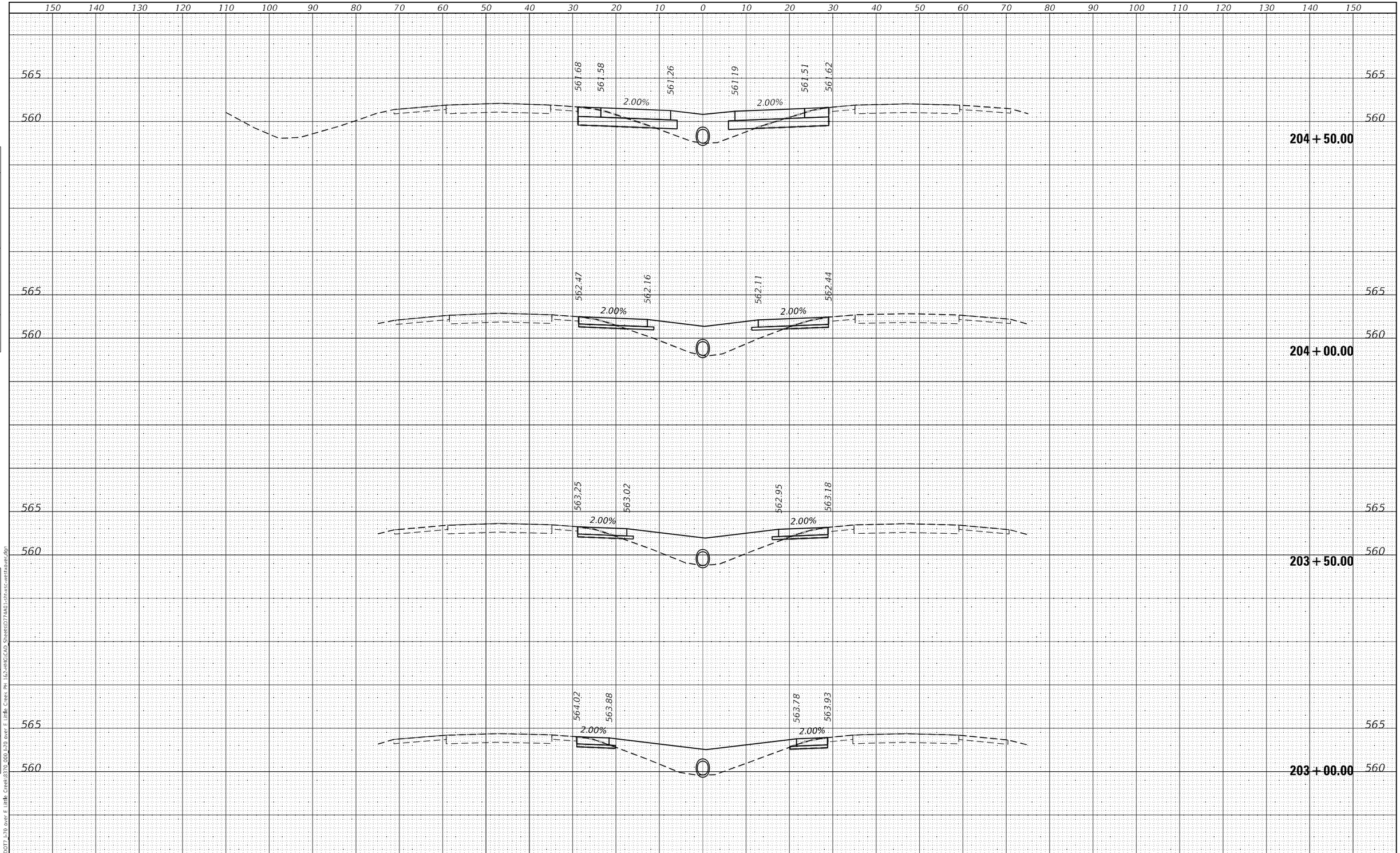

FINAL SURVEY	BY	DATE
SURVEYED		
PLOTTED		
TEMPLATE		
AREAS		
AREAS CHECKED		
NOTE BOOK		
NO.		

ORIGINAL SURVEY	BY	DATE
SURVEYED		
PLOTTED		
TEMPLATE		
AREAS		
AREAS CHECKED		
NOTE BOOK		
NO.		

MODEL: Default
FILE NAME: H:\8370 IDOT I-70 over E Little Creek\8370_000 I-70 over E Little Creek PH 1&2-HNG(CAD) Sheets\0774A01-sht-xsc-westxover.dgn

HMG
ENGINEERS
IL PROF DESIGN FIRM 184.000899

USER NAME = tkruep	DESIGNED -	REVISED -
	DRAWN -	REVISED -
PLOT SCALE = 20.0000 ' / in.	CHECKED -	REVISED -
PLOT DATE = 1/27/2025	DATE -	REVISED -

STATE OF ILLINOIS
DEPARTMENT OF TRANSPORTATION

CROSS SECTIONS
WEST CROSSOVER

SCALE: 1" = 10' | SHEET 2 OF 7 SHEETS | STA. 203+00.00 TO STA. 204+50.00

F.A.I. RTE.	SECTION	COUNTY	TOTAL SHEETS	SHEET NO.
70	(12-53B-1)BR-1	CLARK	93	80
		CONTRACT NO. 74A01		
		ILLINOIS	FED. AID PROJECT	

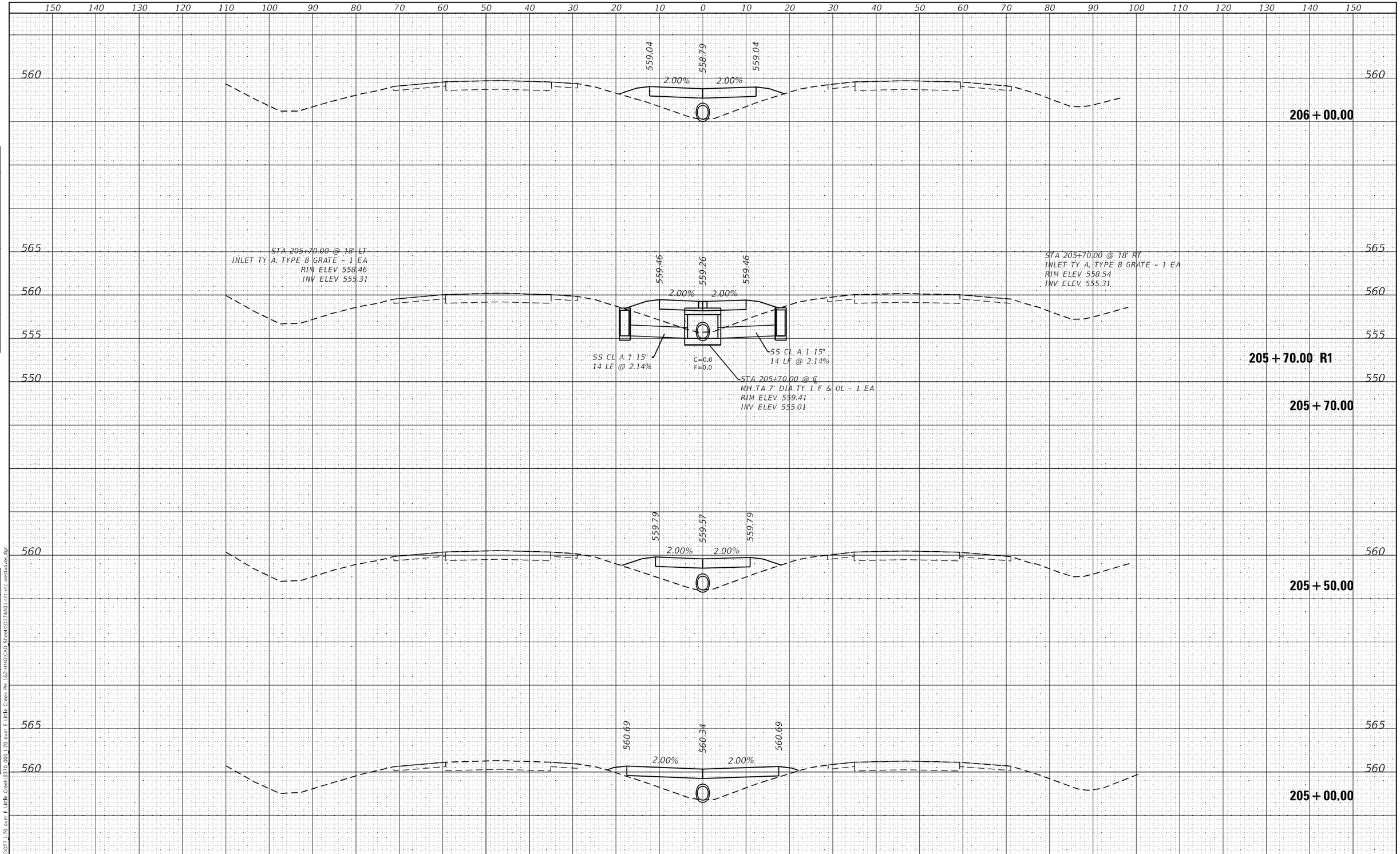

FINAL SURVEY	BY	DATE
SURVEYED		
PLOTTED		
TEMPLATE		
AREAS		
AREAS CHECKED		
NOTE BOOK NO.		

ORIGINAL SURVEY	BY	DATE
SURVEYED		
PLOTTED		
TEMPLATE		
AREAS		
AREAS CHECKED		
NOTE BOOK NO.		

MODEL: Default
FILE NAME: H:\8370 IDOT I-70 over E Little Creek\8370_000 I-70 over E Little Creek PH 1&2-HNG(CAD) Sheets\0774A01-sht-xsc-westxover.dgn

HMG
ENGINEERS
IL PROF DESIGN FIRM 184.000899

USER NAME = tkruep	DESIGNED -	REVISED -
	DRAWN -	REVISED -
PLOT SCALE = 20.0000 ' / in.	CHECKED -	REVISED -
PLOT DATE = 1/27/2025	DATE -	REVISED -

STATE OF ILLINOIS
DEPARTMENT OF TRANSPORTATION

CROSS SECTIONS
WEST CROSSOVER

SCALE: 1" = 10' | SHEET 3 OF 7 SHEETS | STA. 205+00.00 TO STA. 206+00.00

F.A.I. RTE.	SECTION	COUNTY	TOTAL SHEETS	SHEET NO.
70	(12-53B-1)BR-1	CLARK	93	81
		CONTRACT NO. 74A01		
		ILLINOIS	FED. AID PROJECT	

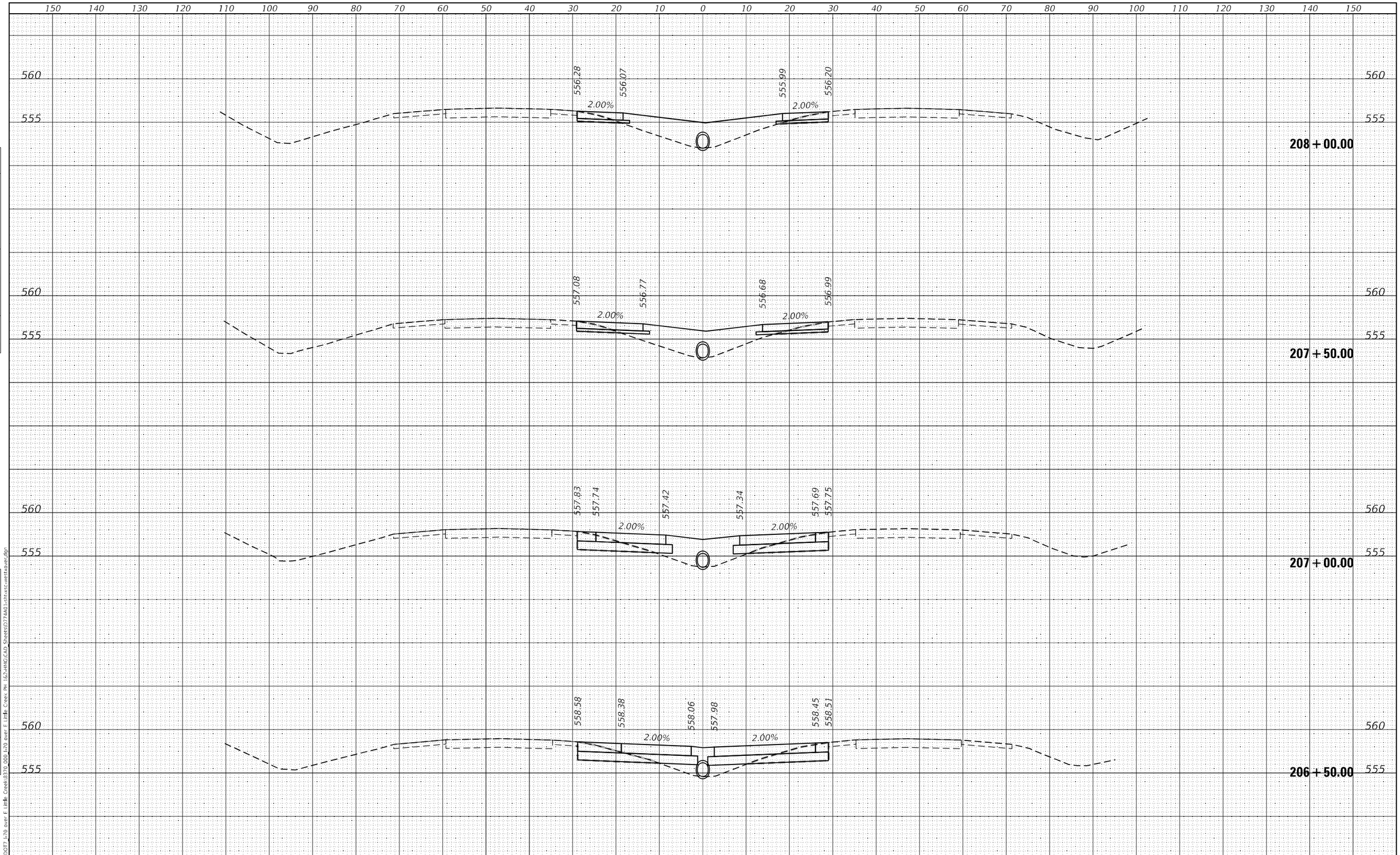

FINAL SURVEY	BY	DATE
SURVEYED		
PLOTTED		
TEMPLATE		
AREAS		
AREAS CHECKED		
NOTE BOOK NO.		

ORIGINAL SURVEY	BY	DATE
SURVEYED		
PLOTTED		
TEMPLATE		
AREAS		
AREAS CHECKED		
NOTE BOOK NO.		

MODEL: Default
FILE NAME: H:\8370 IDOT I-70 over E Little Creek\8370_000 I-70 over E Little Creek PH 1&2-HNG(CAD) Sheets\0774A01-sht-xsc-westxover.dgn

HMG
ENGINEERS
IL PROF DESIGN FIRM 184.000899

USER NAME = tkruep	DESIGNED -	REVISED -
	DRAWN -	REVISED -
PLOT SCALE = 20.0000 ' / in.	CHECKED -	REVISED -
PLOT DATE = 1/27/2025	DATE -	REVISED -

STATE OF ILLINOIS
DEPARTMENT OF TRANSPORTATION

CROSS SECTIONS
WEST CROSSOVER

SCALE: 1" = 10' | SHEET 4 OF 7 SHEETS | STA. 206+50.00 TO STA. 208+00.00

F.A.I. RTE.	SECTION	COUNTY	TOTAL SHEETS	SHEET NO.
70	(12-53B-1)BR-1	CLARK	93	82
		CONTRACT NO. 74A01		
		ILLINOIS	FED. AID PROJECT	

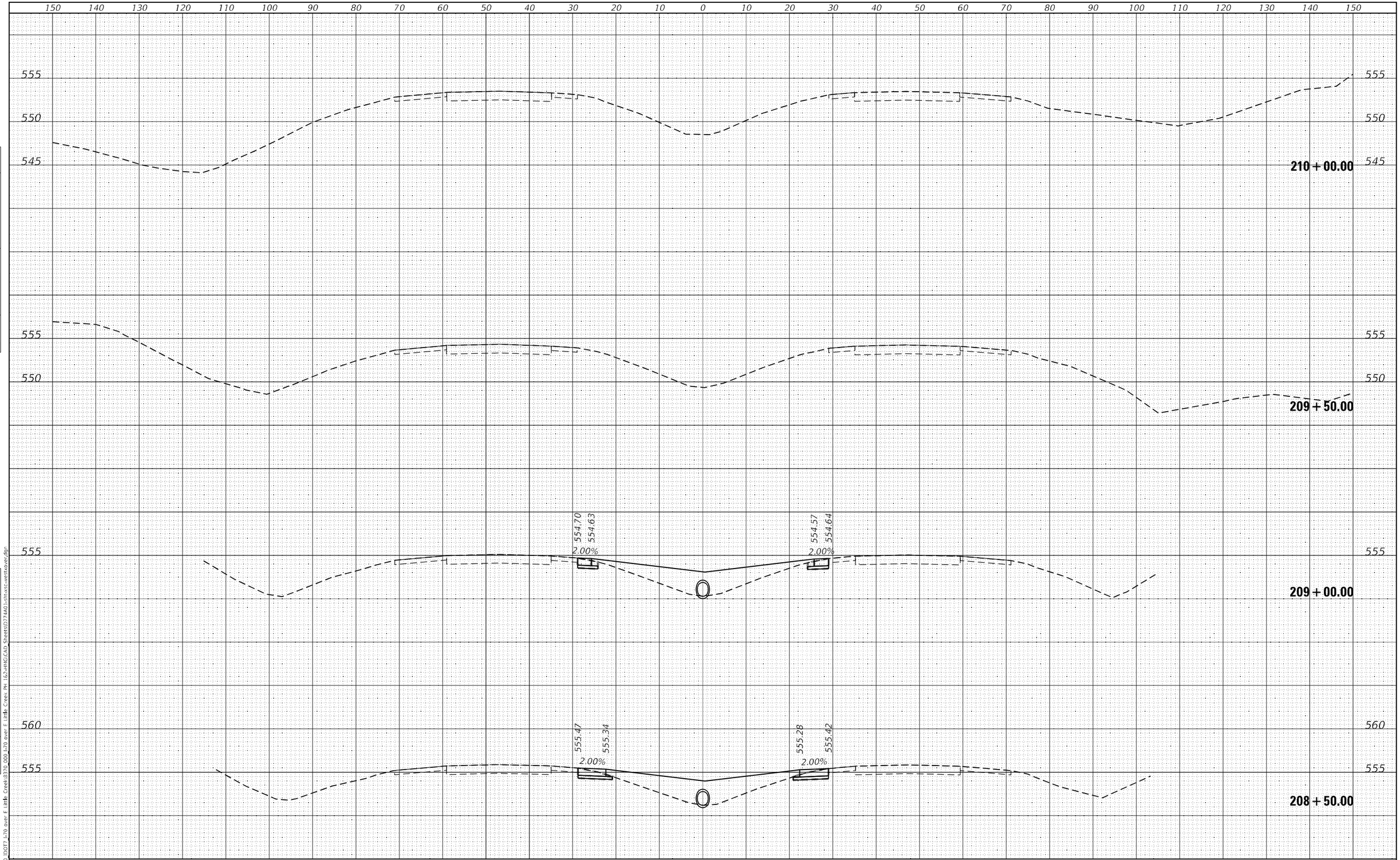

FINAL SURVEY		BY	DATE
NOTE BOOK	SURVEYED		
	PLOTTED		
	TEMPLATE		
	AREAS		
NO.	AREAS CHECKED		

ORIGINAL SURVEY		BY	DATE
NOTE BOOK	SURVEYED		
	PLOTTED		
	TEMPLATE		
	AREAS		
NO.	AREAS CHECKED		

MODEL: Default
FILE NAME: H:\8370 IDOT I-70 over E Little Creek\8370_000 I-70 over E Little Creek PH 1&2-HNG(CAD) Sheets\0774A01-sht-xsc-westxover.dgn

HMG
ENGINEERS
IL PROF DESIGN FIRM 184.000899

USER NAME = tkruep	DESIGNED -	REVISED -
	DRAWN -	REVISED -
PLOT SCALE = 20.0000 ' / in.	CHECKED -	REVISED -
PLOT DATE = 1/27/2025	DATE -	REVISED -

STATE OF ILLINOIS
DEPARTMENT OF TRANSPORTATION

CROSS SECTIONS
WEST CROSSOVER

SCALE: 1" = 10' | SHEET 5 OF 7 SHEETS | STA. 208+50.00 TO STA. 210+00.00

F.A.I. RTE.	SECTION	COUNTY	TOTAL SHEETS	SHEET NO.
70	(12-53B-1)BR-1	CLARK	93	83
		CONTRACT NO. 74A01		
		ILLINOIS	FED. AID PROJECT	

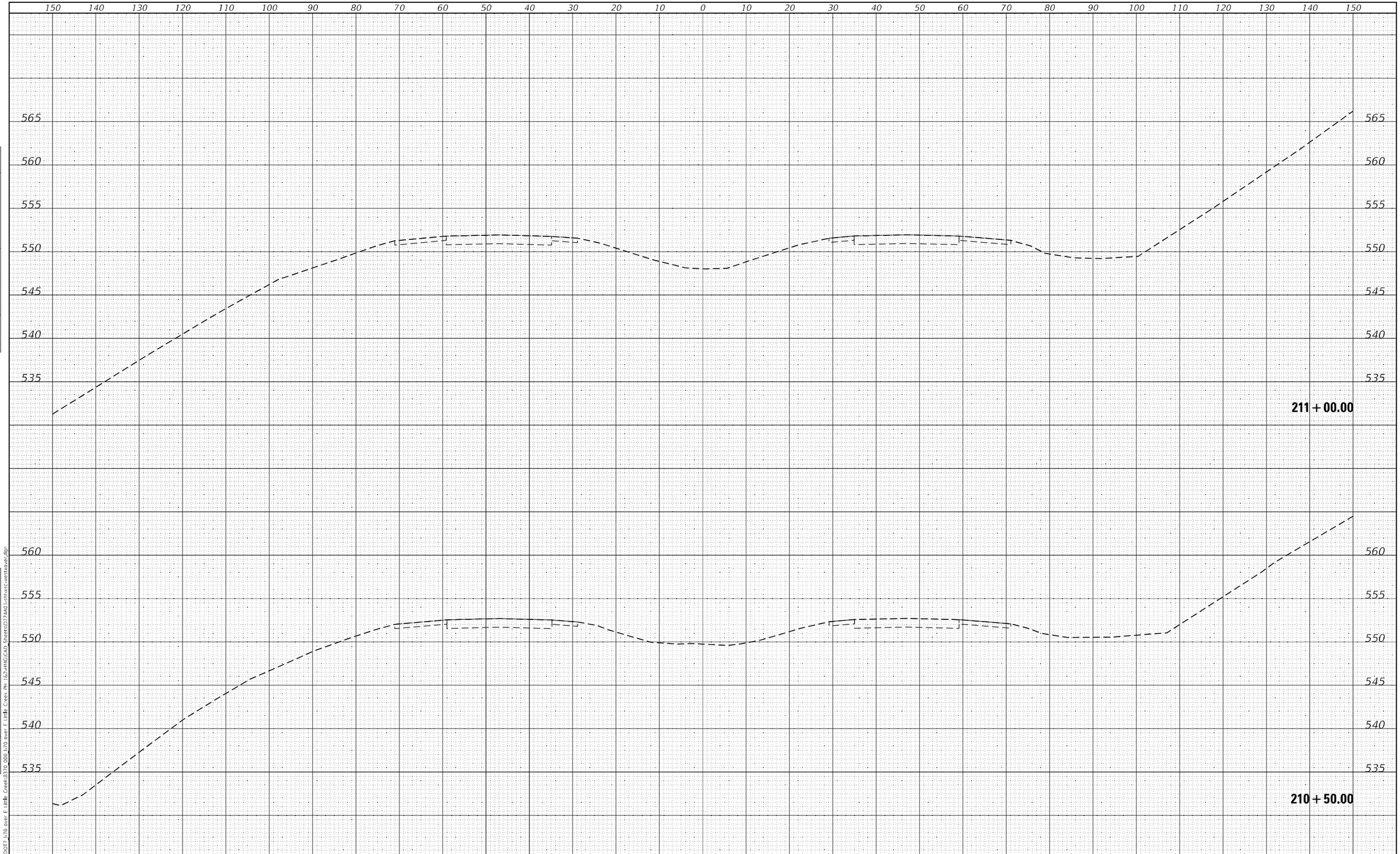

FINAL SURVEY	BY	DATE
SURVEYED		
PLOTTED		
TEMPLATE		
AREAS		
AREAS CHECKED		
NOTE BOOK		
NO.		

ORIGINAL SURVEY	BY	DATE
SURVEYED		
PLOTTED		
TEMPLATE		
AREAS		
AREAS CHECKED		
NOTE BOOK		
NO.		

MODEL: Default
FILE NAME: H:\8370 IDOT I-70 over E Little Creek\8370_000 I-70 over E Little Creek PH 1 62-HNG(CAD) Sheets\07744A01-sht-xsc-westxover.dgn

HMG
ENGINEERS
IL PROF DESIGN FIRM 184.000899

USER NAME = tkruep	DESIGNED -	REVISED -
	DRAWN -	REVISED -
PLOT SCALE = 20.0000 ' / in.	CHECKED -	REVISED -
PLOT DATE = 1/27/2025	DATE -	REVISED -

STATE OF ILLINOIS
DEPARTMENT OF TRANSPORTATION

CROSS SECTIONS
WEST CROSSOVER

SCALE: 1" = 10' | SHEET 6 OF 7 SHEETS | STA. 210+50.00 TO STA. 211+00.00

F.A.I. RTE.	SECTION	COUNTY	TOTAL SHEETS	SHEET NO.
70	(12-53B-1)BR-1	CLARK	93	84
		CONTRACT NO. 74A01		
		ILLINOIS	FED. AID PROJECT	

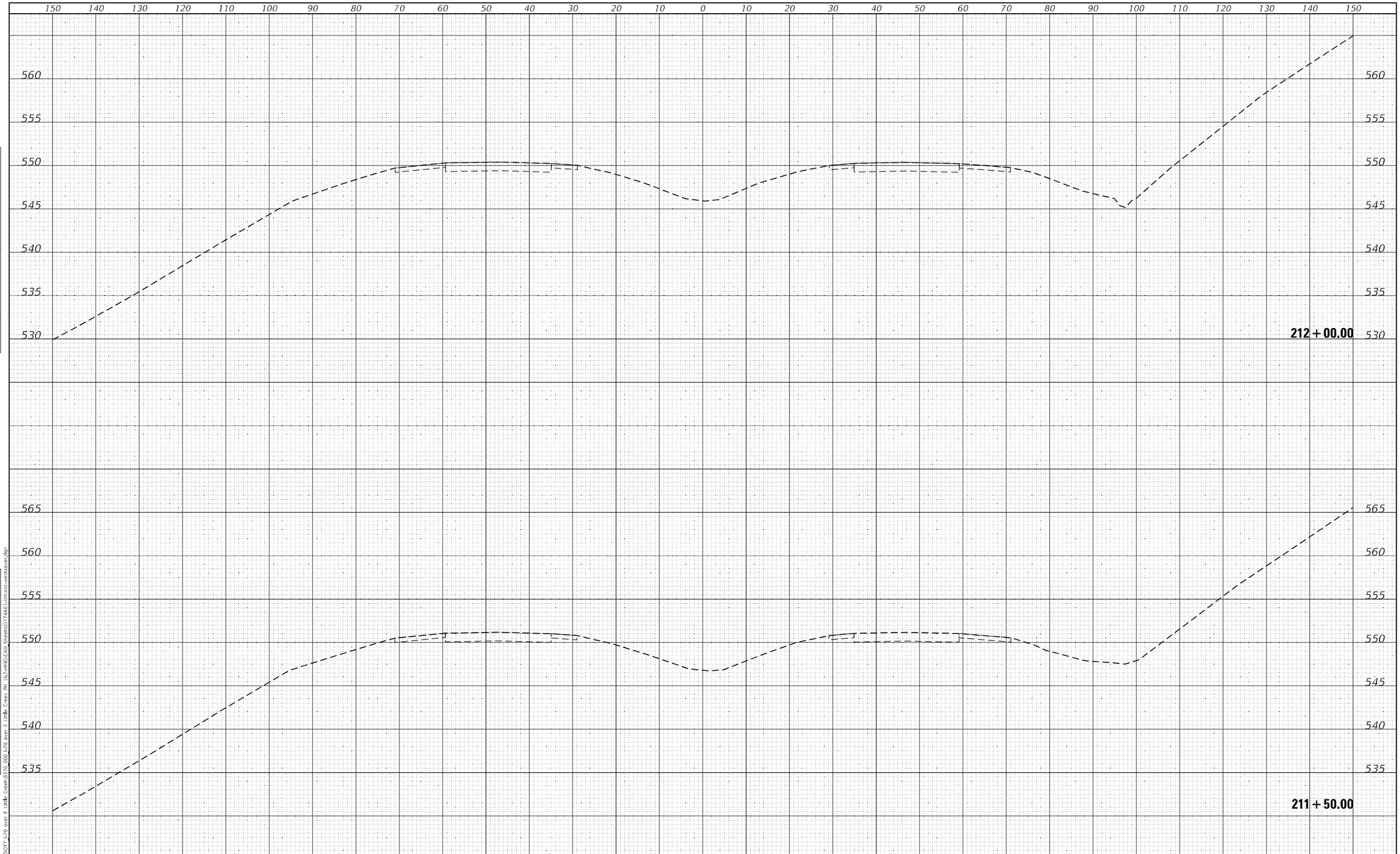

FINAL SURVEY		BY	DATE
SURVEYED			
PLOTTED			
TEMPLATE			
AREAS			
AREAS CHECKED			
NOTE BOOK			
NO.			

ORIGINAL SURVEY		BY	DATE
SURVEYED			
PLOTTED			
TEMPLATE			
AREAS			
AREAS CHECKED			
NOTE BOOK			
NO.			

MODEL: Default
FILE NAME: H:\8370 IDOT I-70 over E Little Creek\8370_000 I-70 over E Little Creek PH 1&2-HMG\CAD Sheets\D774A01-sht-xsc-westcrossover.dgn

HMG
ENGINEERS
IL PROF DESIGN FIRM 184.000899

USER NAME = tkruep	DESIGNED -	REVISED -	
	DRAWN -	REVISED -	
PLOT SCALE = 20.0000 ' / in.	CHECKED -	REVISED -	
PLOT DATE = 1/27/2025	DATE -	REVISED -	

STATE OF ILLINOIS
DEPARTMENT OF TRANSPORTATION

CROSS SECTIONS
WEST CROSSOVER

SCALE: 1" = 10' | SHEET 7 OF 7 SHEETS | STA. 211+50.00 TO STA. 212+00.00

F.A.I. RTE.	SECTION	COUNTY	TOTAL SHEETS	SHEET NO.
70	(12-53B-1)BR-1	CLARK	93	85
		CONTRACT NO. 74A01		
		ILLINOIS	FED. AID PROJECT	

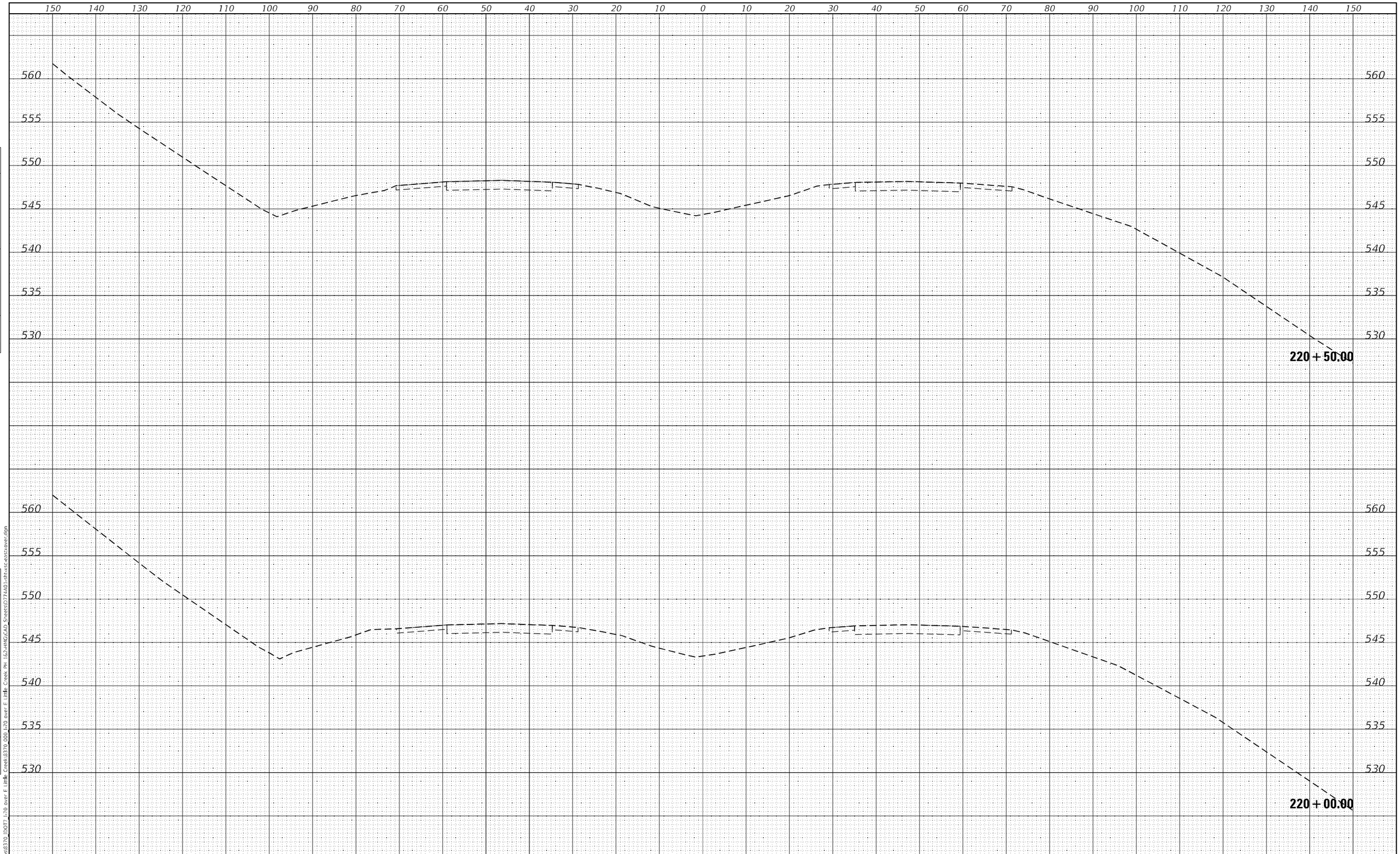

FINAL SURVEY		BY	DATE
NOTE BOOK NO.	SURVEYED		
	PLOTTED		
	TEMPLATE		
	AREAS		
	AREAS CHECKED		

ORIGINAL SURVEY		BY	DATE
NOTE BOOK NO.	SURVEYED		
	PLOTTED		
	TEMPLATE		
	AREAS		
	AREAS CHECKED		

MODEL: Default
FILE NAME: WHMG\pbds\8370_DOT7_I-70 over E Little Creek\8370_000_I-70 over E Little Creek PH 1&2-HMG\CAD_Sheets\07744A01-sht-xsc-east-crossover.dgn

HMG
ENGINEERS
IL PROF DESIGN FIRM 184.000899

USER NAME = tkruep	DESIGNED -	REVISED -	
	DRAWN -	REVISED -	
PLOT SCALE = 20.0000 ' / in.	CHECKED -	REVISED -	
PLOT DATE = 1/27/2025	DATE -	REVISED -	

STATE OF ILLINOIS
DEPARTMENT OF TRANSPORTATION

CROSS SECTIONS
EAST CROSSOVER

SCALE: 1" = 10' | SHEET 1 OF 8 SHEETS | STA. 220+00.00 TO STA. 220+50.00

F.A.I. RTE.	SECTION	COUNTY	TOTAL SHEETS	SHEET NO.
70	(12-53B-1)BR-1	CLARK	93	86
		CONTRACT NO. 74A01		
		ILLINOIS	FED. AID PROJECT	

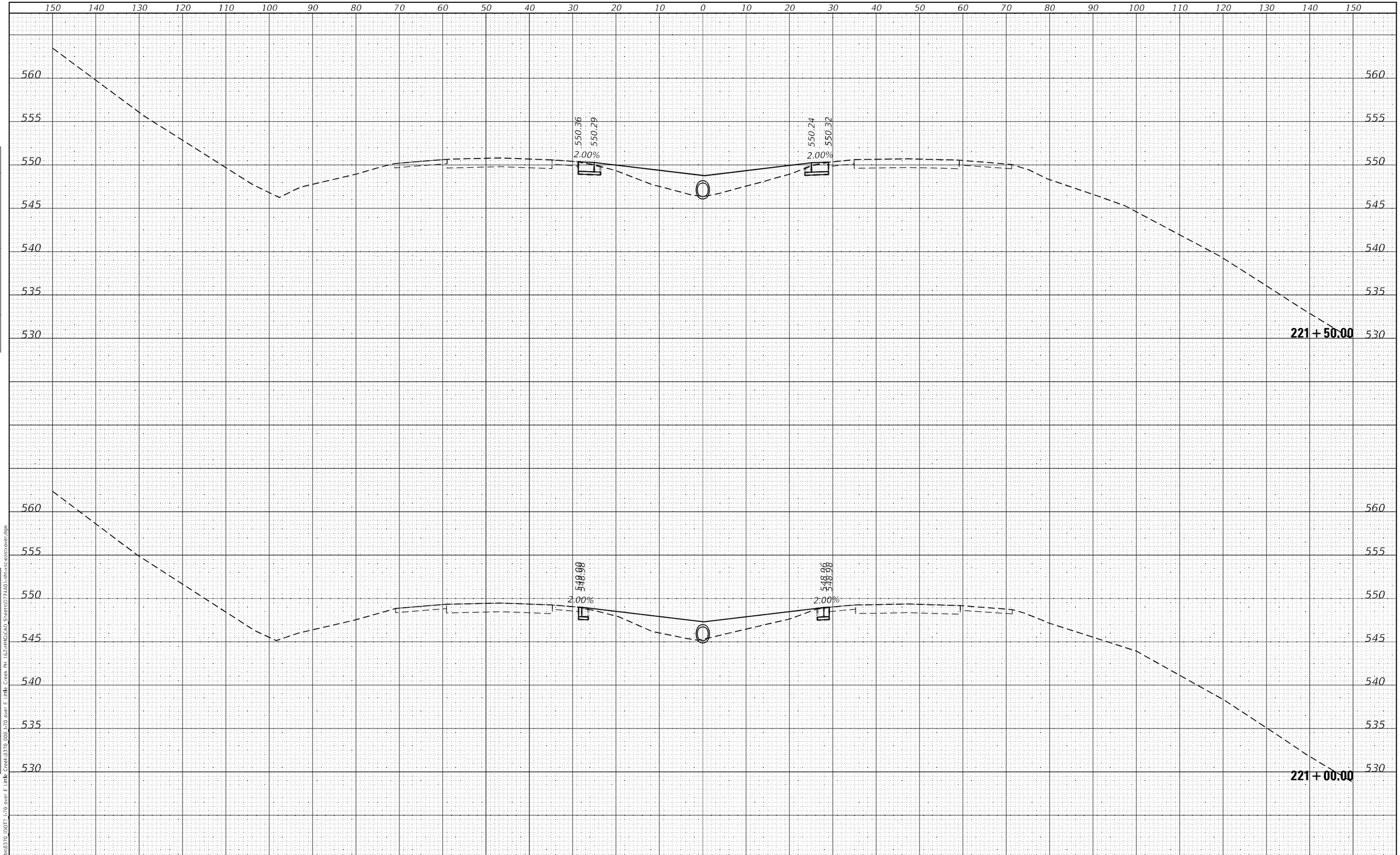

FINAL SURVEY	BY	DATE
SURVEYED		
PLOTTED		
TEMPLATE		
AREAS		
AREAS CHECKED		
NOTE BOOK		
NO.		

ORIGINAL SURVEY	BY	DATE
SURVEYED		
PLOTTED		
TEMPLATE		
AREAS		
AREAS CHECKED		
NOTE BOOK		
NO.		

MODEL: Default
FILE NAME: \\HMG\jobs\8370_IDOT7_I-70 over E Little Creek\8370 000 I-70 over E Little Creek PH 1&2-HMG\CAD Sheets\07744Q1-sht-xsc-eb-xsxover.dgn

HMG
ENGINEERS
IL PROF DESIGN FIRM 184.000899

USER NAME = tkruep	DESIGNED -	REVISED -
	DRAWN -	REVISED -
PLOT SCALE = 20.0000 ' / in.	CHECKED -	REVISED -
PLOT DATE = 1/27/2025	DATE -	REVISED -

STATE OF ILLINOIS
DEPARTMENT OF TRANSPORTATION

CROSS SECTIONS
EAST CROSSOVER

SCALE: 1" = 10' | SHEET 2 OF 8 SHEETS | STA. 221+00.00 TO STA. 221+50.00

F.A.I. RTE.	SECTION	COUNTY	TOTAL SHEETS	SHEET NO.
70	(12-53B-1)BR-1	CLARK	93	87
		CONTRACT NO. 74A01		
		ILLINOIS	FED. AID PROJECT	

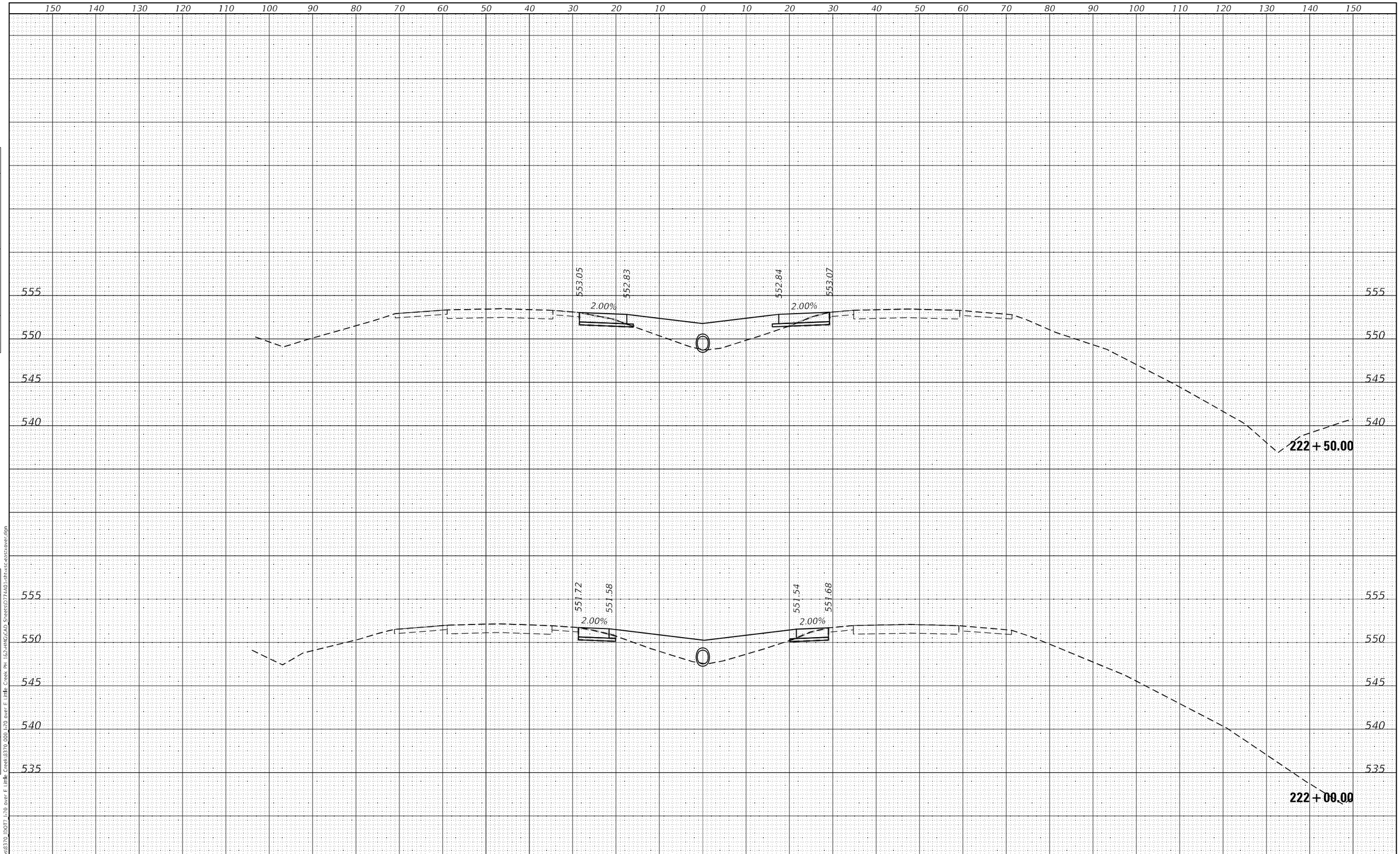

FINAL SURVEY	BY	DATE
SURVEYED		
PLOTTED		
TEMPLATE		
AREAS		
AREAS CHECKED		
NOTE BOOK NO.		

ORIGINAL SURVEY	BY	DATE
SURVEYED		
PLOTTED		
TEMPLATE		
AREAS		
AREAS CHECKED		
NOTE BOOK NO.		

MODEL: Default
FILE NAME: WHMG\dgns\8370_DOT7_I-70 over E Little Creek\8370_000_I-70 over E Little Creek PH 1&2-HMG\CAD_Sheets\07744D1-sht-xsc-east-over.dgn

HMG
ENGINEERS
IL PROF DESIGN FIRM 184.000899

USER NAME = tkruep	DESIGNED -	REVISED -
	DRAWN -	REVISED -
PLOT SCALE = 20.0000 ' / in.	CHECKED -	REVISED -
PLOT DATE = 1/27/2025	DATE -	REVISED -

STATE OF ILLINOIS
DEPARTMENT OF TRANSPORTATION

CROSS SECTIONS
EAST CROSSOVER

SCALE: 1" = 10' | SHEET 3 OF 8 SHEETS | STA. 222+00.00 TO STA. 222+50.00

F.A.I. RTE.	SECTION	COUNTY	TOTAL SHEETS	SHEET NO.
70	(12-53B-1)BR-1	CLARK	93	88
		CONTRACT NO. 74A01		
		ILLINOIS	FED. AID PROJECT	

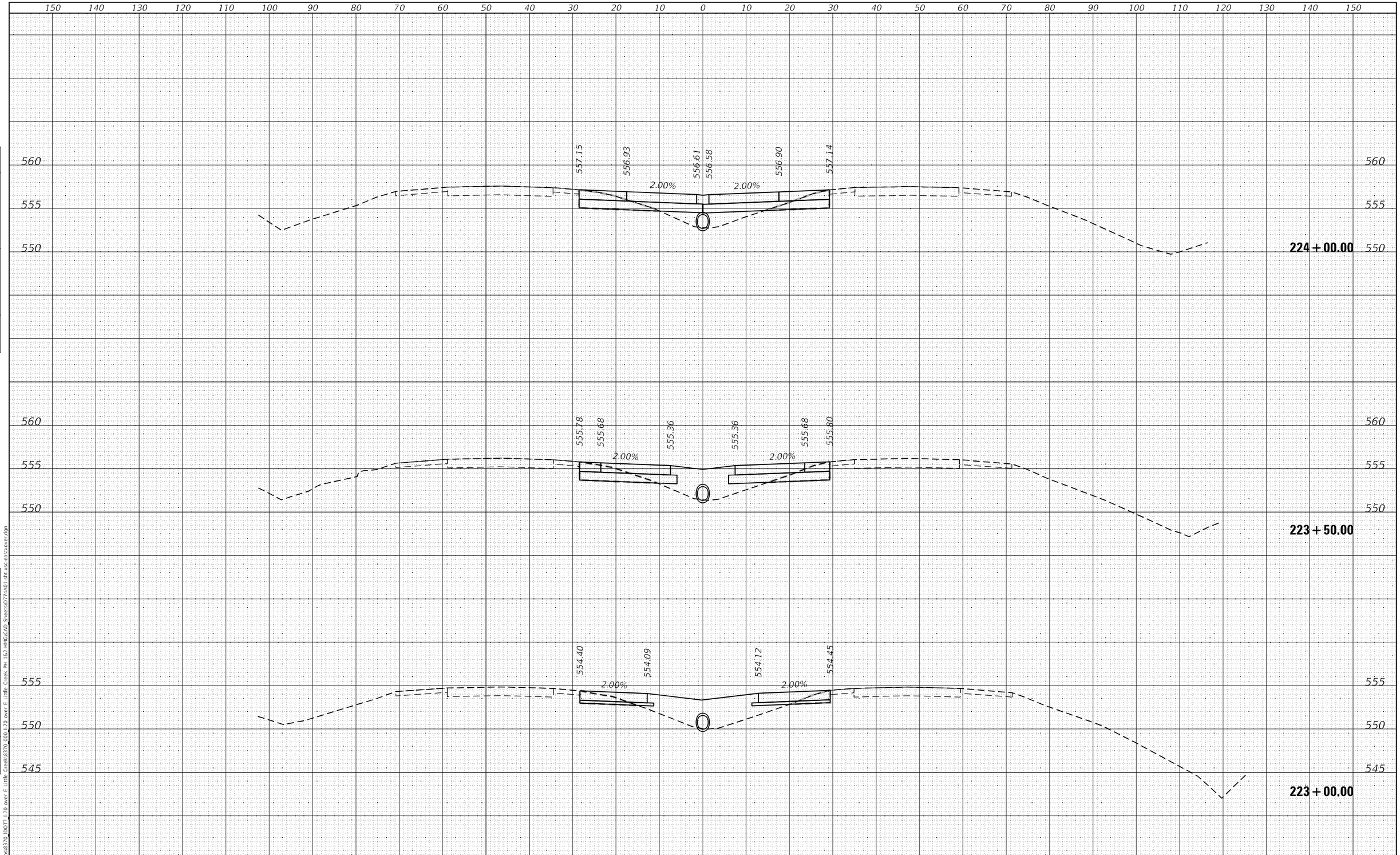

FINAL SURVEY		BY	DATE
NOTE BOOK	SURVEYED		
	PLOTTED		
	TEMPLATE		
	AREAS		
NO.	AREAS CHECKED		

ORIGINAL SURVEY		BY	DATE
NOTE BOOK	SURVEYED		
	PLOTTED		
	TEMPLATE		
	AREAS		
NO.	AREAS CHECKED		

MODEL: Default
FILE NAME: \\HMG\jobs\8370_IDOT7_I-70 over E Little Creek\8370 000 I-70 over E Little Creek PH 1&2-HMG\CAD Sheets\0774A01-sht-xsc-eastxover.dgn

HMG
ENGINEERS
IL PROF DESIGN FIRM 184.000899

USER NAME = tkruep	DESIGNED -	REVISED -
	DRAWN -	REVISED -
PLOT SCALE = 20.0000 ' / in.	CHECKED -	REVISED -
PLOT DATE = 1/27/2025	DATE -	REVISED -

STATE OF ILLINOIS
DEPARTMENT OF TRANSPORTATION

CROSS SECTIONS
EAST CROSSOVER

SCALE: 1" = 10' | SHEET 4 OF 8 SHEETS | STA. 223+00.00 TO STA. 224+00.00

F.A.I. RTE.	SECTION	COUNTY	TOTAL SHEETS	SHEET NO.
70	(12-53B-1)BR-1	CLARK	93	89

CONTRACT NO. 74A01

ILLINOIS | FED. AID PROJECT

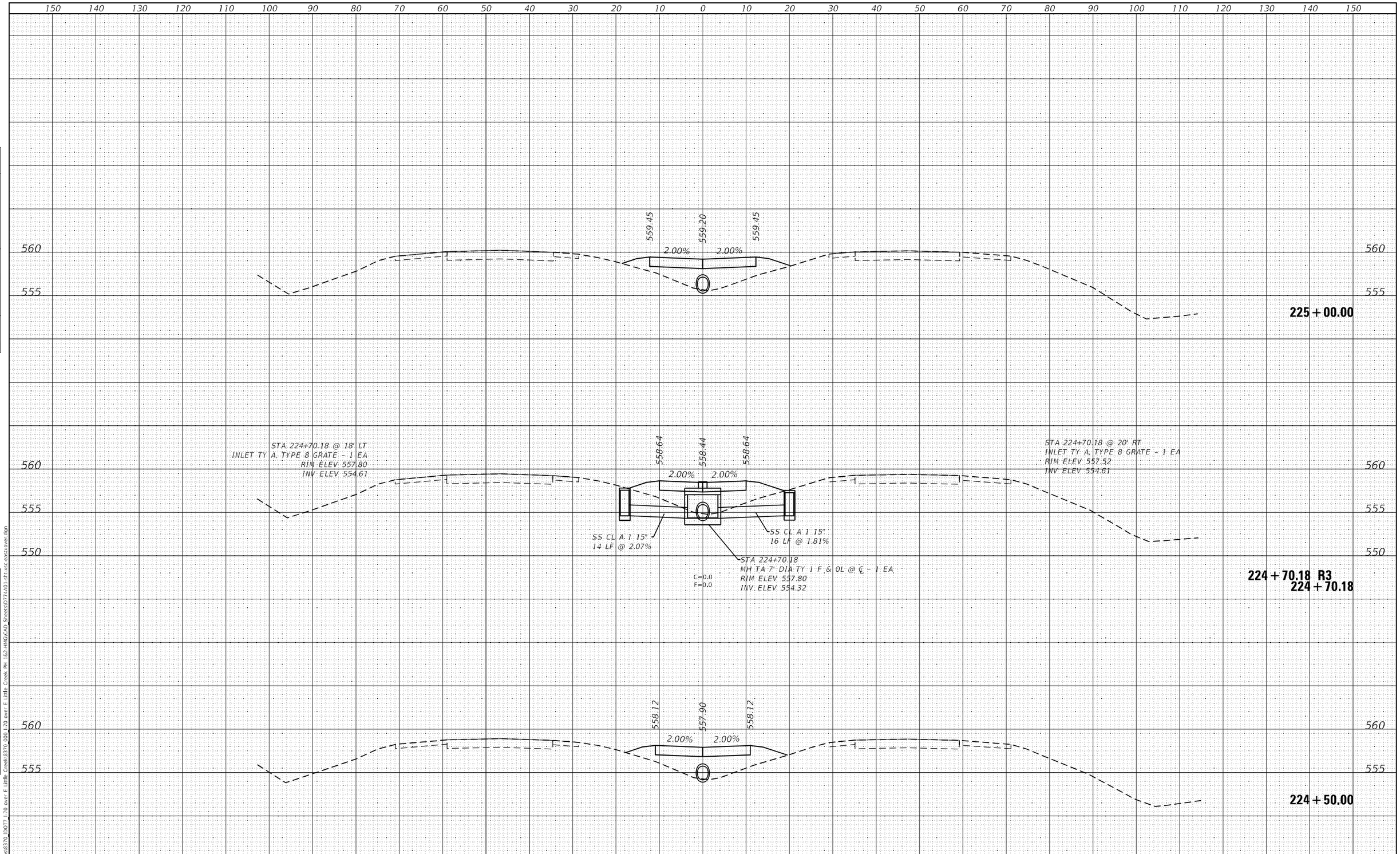

FINAL SURVEY	BY	DATE
SURVEYED		
PLOTTED		
TEMPLATE		
AREAS		
AREAS CHECKED		
NOTE BOOK NO.		

ORIGINAL SURVEY	BY	DATE
SURVEYED		
PLOTTED		
TEMPLATE		
AREAS		
AREAS CHECKED		
NOTE BOOK NO.		

MODEL: Default
FILE NAME: \\HMG\jobs\8370_IDOT_I-70 over E Little Creek\8370 000 I-70 over E Little Creek PH 1&2-HMG\CAD Sheets\0774A01-sht-xsc-eastxover.dgn

HMG
ENGINEERS
IL PROF DESIGN FIRM 184.000899

USER NAME = tkruep	DESIGNED -	REVISED -
	DRAWN -	REVISED -
PLOT SCALE = 20.0000 ' / in.	CHECKED -	REVISED -
PLOT DATE = 1/27/2025	DATE -	REVISED -

STATE OF ILLINOIS
DEPARTMENT OF TRANSPORTATION

CROSS SECTIONS
EAST CROSSOVER

SCALE: 1" = 10' | SHEET 5 OF 8 SHEETS | STA. 224+50.00 TO STA. 225+00.00

F.A.I. RTE.	SECTION	COUNTY	TOTAL SHEETS	SHEET NO.
70	(12-53B-1)BR-1	CLARK	93	90

CONTRACT NO. 74A01

ILLINOIS | FED. AID PROJECT

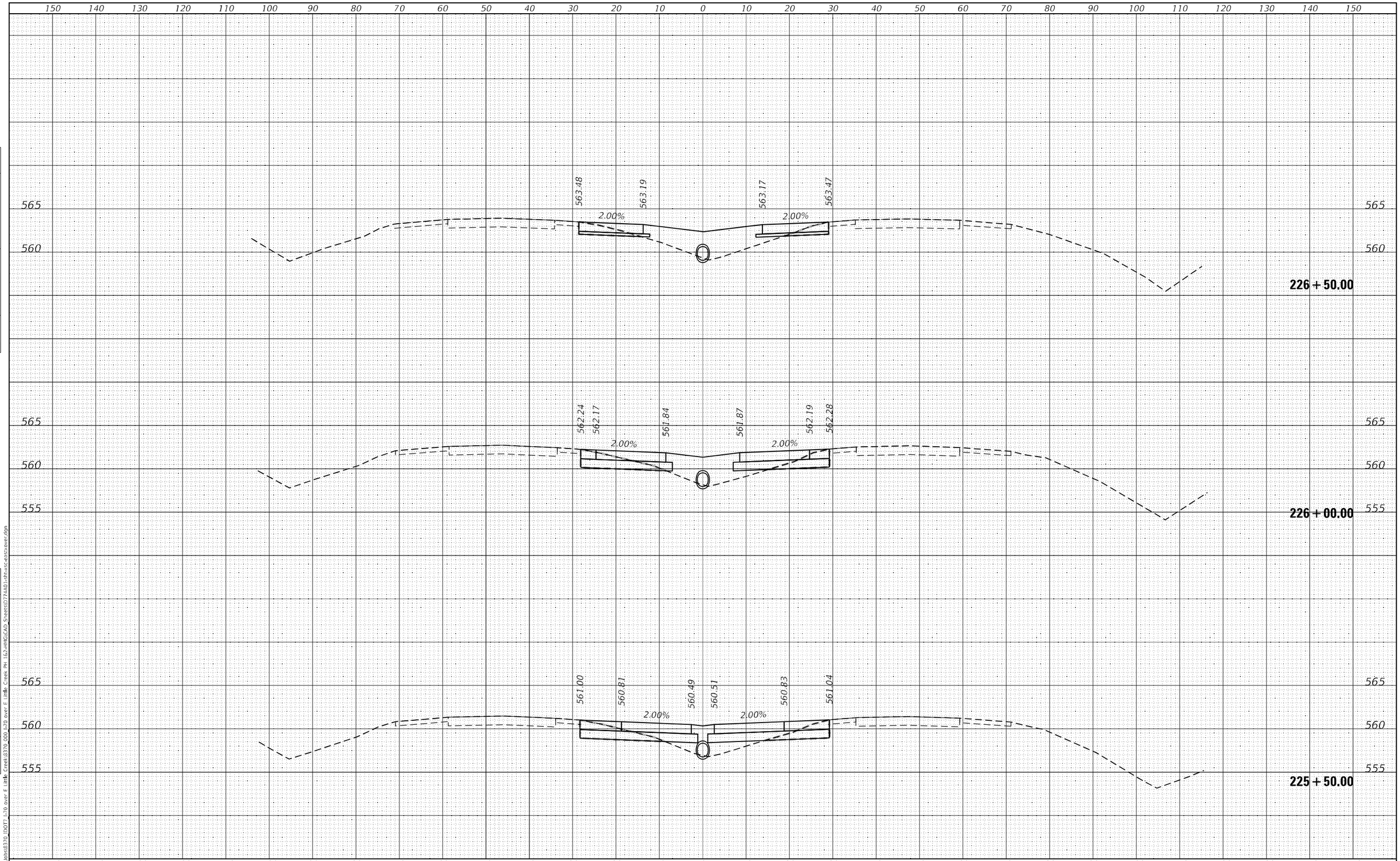

FINAL SURVEY	BY	DATE
SURVEYED		
PLOTTED		
TEMPLATE		
AREAS		
AREAS CHECKED		
NOTE BOOK NO.		

ORIGINAL SURVEY	BY	DATE
SURVEYED		
PLOTTED		
TEMPLATE		
AREAS		
AREAS CHECKED		
NOTE BOOK NO.		

MODEL: Default
FILE NAME: \\HMG\Jobs\8370_IDOT_I-70 over E. Little Creek\8370_000_I-70 over E. Little Creek PH 1&2-HMG\CAD_Sheets\0774A01-sht-xsc-eoxsrover.dgn

HMG
ENGINEERS
IL PROF DESIGN FIRM 184.000899

USER NAME = tkruep	DESIGNED -	REVISED -	
	DRAWN -	REVISED -	
PLOT SCALE = 20.0000 ' / in.	CHECKED -	REVISED -	
PLOT DATE = 1/27/2025	DATE -	REVISED -	

STATE OF ILLINOIS
DEPARTMENT OF TRANSPORTATION

CROSS SECTIONS
EAST CROSSOVER

SCALE: 1" = 10' | SHEET 6 OF 8 SHEETS | STA. 225+50.00 TO STA. 226+50.00

F.A.I. RTE.	SECTION	COUNTY	TOTAL SHEETS	SHEET NO.
70	(12-53B-1)BR-1	CLARK	93	91

CONTRACT NO. 74A01

ILLINOIS | FED. AID PROJECT

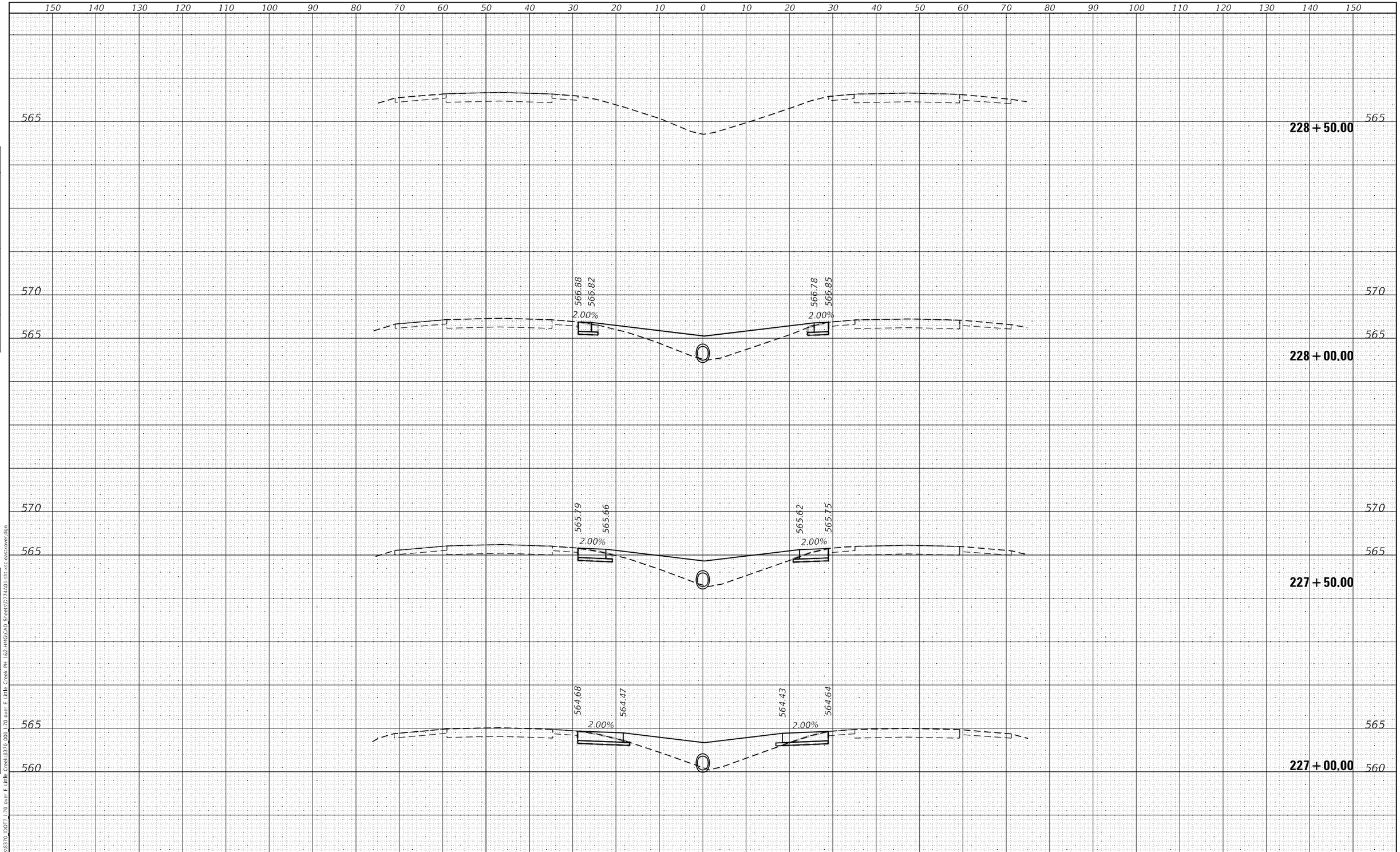

FINAL SURVEY	BY	DATE
SURVEYED		
PLOTTED		
TEMPLATE		
AREAS		
AREAS CHECKED		
NOTE BOOK		
NO.		

ORIGINAL SURVEY	BY	DATE
SURVEYED		
PLOTTED		
TEMPLATE		
AREAS		
AREAS CHECKED		
NOTE BOOK		
NO.		

MODEL: Default
FILE NAME: \\HMG\jobs\8370_IDOT7_I-70 over E Little Creek\8370 000 I-70 over E Little Creek PH 162-HMG\CAD Sheets\07744A01-sht-xsc-eastxover.dgn

HMG
ENGINEERS
IL PROF DESIGN FIRM 184.000899

USER NAME = tkruep	DESIGNED -	REVISED -
	DRAWN -	REVISED -
PLOT SCALE = 20.0000 ' / in.	CHECKED -	REVISED -
PLOT DATE = 1/27/2025	DATE -	REVISED -

STATE OF ILLINOIS
DEPARTMENT OF TRANSPORTATION

CROSS SECTIONS
EAST CROSSOVER

SCALE: 1" = 10' | SHEET 7 OF 8 SHEETS | STA. 227+00.00 TO STA. 228+50.00

F.A.I. RTE.	SECTION	COUNTY	TOTAL SHEETS	SHEET NO.
70	(12-53B-1)BR-1	CLARK	93	92
		CONTRACT NO. 74A01		
		ILLINOIS	FED. AID PROJECT	

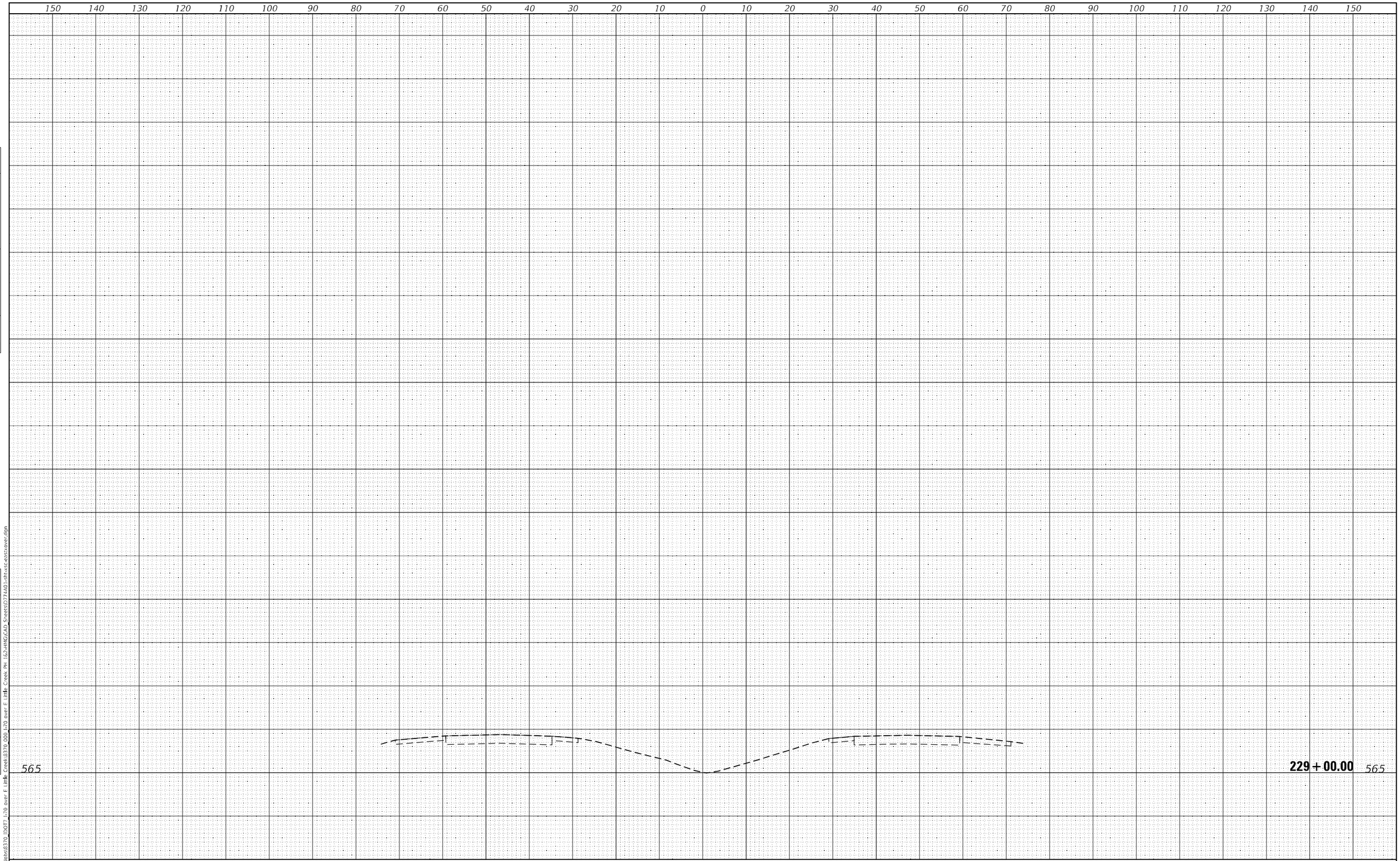

FINAL SURVEY		BY	DATE
NOTE BOOK NO.	SURVEYED		
	PLOTTED		
	TEMPLATE		
	AREAS		
	AREAS CHECKED		

ORIGINAL SURVEY		BY	DATE
NOTE BOOK NO.	SURVEYED		
	PLOTTED		
	TEMPLATE		
	AREAS		
	AREAS CHECKED		

MODEL: Default
FILE NAME: WHMGIabs\8370_DOT7_I-70 over E Little Creek\8370_000_I-70 over E Little Creek PH 1&2-HMG\CAD_Sheets\D774A01-sht-xsc-east-crossover.dgn

HMG
ENGINEERS
IL PROF DESIGN FIRM 184.000899

USER NAME = tkruep	DESIGNED -	REVISED -
	DRAWN -	REVISED -
PLOT SCALE = 20.0000 ' / in.	CHECKED -	REVISED -
PLOT DATE = 1/27/2025	DATE -	REVISED -

STATE OF ILLINOIS
DEPARTMENT OF TRANSPORTATION

CROSS SECTIONS
EAST CROSSOVER

SCALE: 1" = 10' | SHEET 8 OF 8 SHEETS | STA. 229+00.00 TO STA. 229+00.00

F.A.I. RTE.	SECTION	COUNTY	TOTAL SHEETS	SHEET NO.
70	(12-53B-1)BR-1	CLARK	93	93
		CONTRACT NO. 74A01		
		ILLINOIS	FED. AID PROJECT	