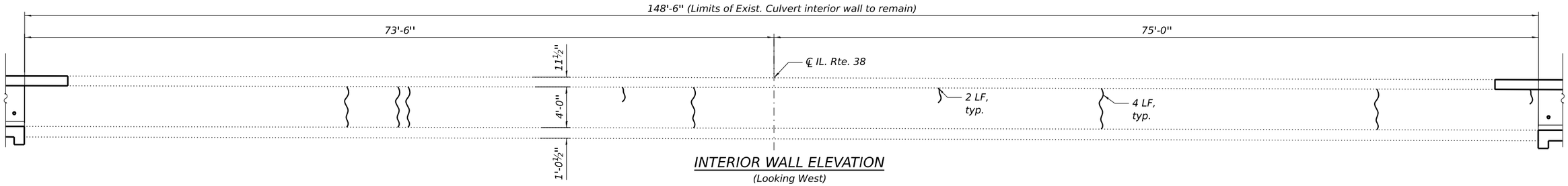

INTERIOR WALL ELEVATION
(Looking West)

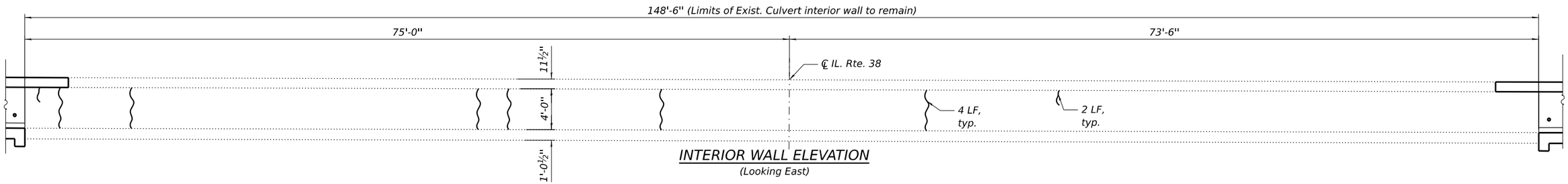

INTERIOR WALL ELEVATION
(Looking East)

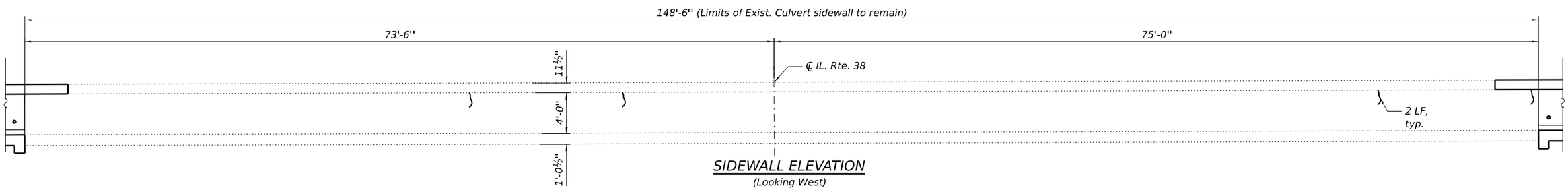

SIDEWALL ELEVATION
(Looking West)

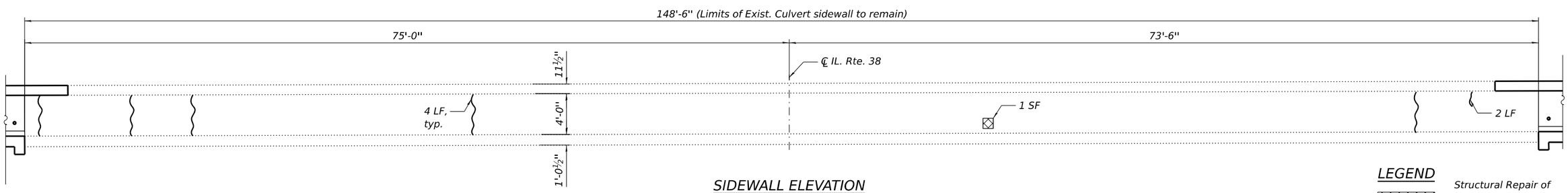

SIDEWALL ELEVATION
(Looking East)

LEGEND

▨	Structural Repair of Concrete (Depth Equal To or Less Than 5")
LF	Linear Foot
SF	Square Foot
∼	Epoxy Crack Injection (Width >0.06")

NOTE:

1. For quantities and Bill of Material, see Sheet S1-11.

MODEL: Default
FILE NAME: P:\2001-818 PTB 194-021 (D2) IL 38 @ I-39 (CBBEL)\Sheet Files\Final Plans\0171196-D9200120-S08A-Sec6Dets2A.dgn
2/17/2025 11:47:36 AM

HBM ENGINEERING GROUP, LLC

USER NAME =	DESIGNED - JJS, IAL	REVISED -	
	CHECKED - MI	REVISED -	
PLOT SCALE =	DRAWN - EN, AWD	REVISED -	
PLOT DATE =	CHECKED - MI	REVISED -	

STATE OF ILLINOIS
DEPARTMENT OF TRANSPORTATION

CULVERT SECTIONS AND DETAILS (SHEET 2 OF 4)
STRUCTURE NUMBER 071-1196

SHEET S1-09 OF S1-13 SHEETS

F.A.* RTE.	SECTION	COUNTY	TOTAL SHEETS	SHEET NO.
*	141-1HBR-3 & (9,10)R-3	OGLE	508	301
		CONTRACT NO. 64N98		
	ILLINOIS	FED. AID PROJECT		

*FAI ROUTE 39 (I-39) & FAP 567 (IL 38)

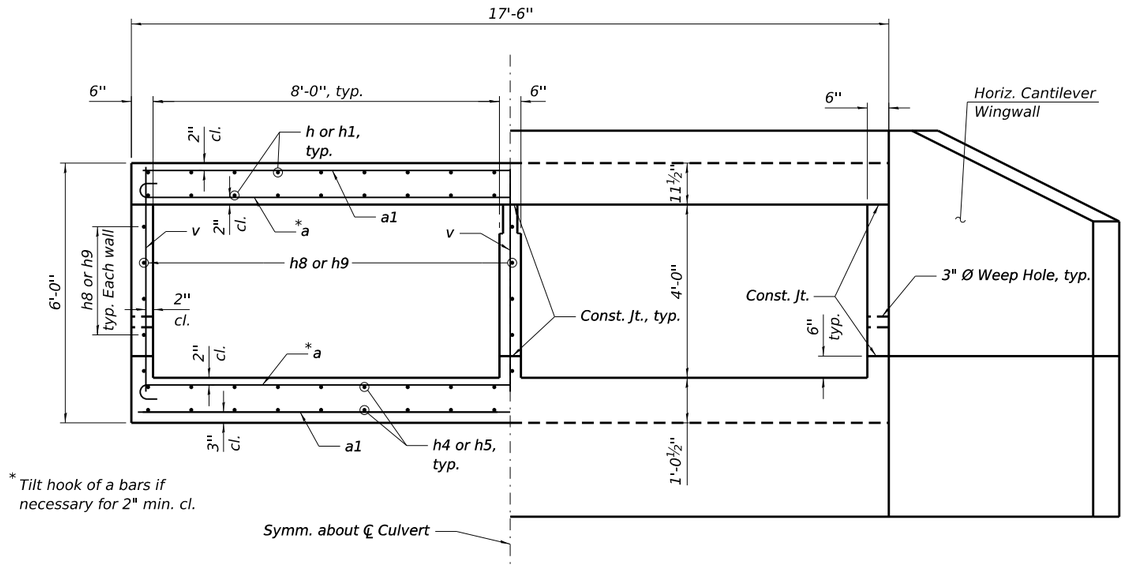

HALF SECTION THRU BARREL

HALF END ELEVATION

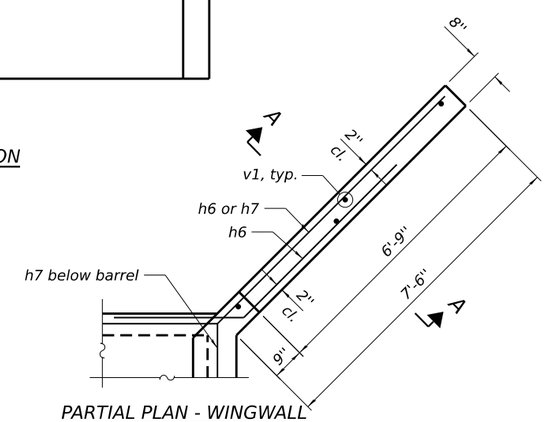

PARTIAL PLAN - WINGWALL

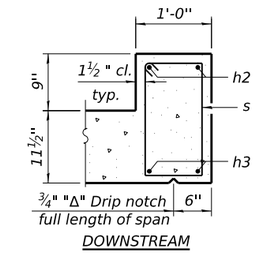

DETAIL A

(Reinforcement in top slab omitted for clarity)

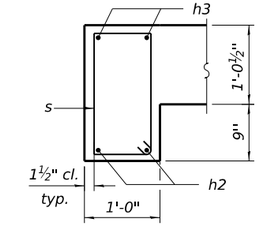

DETAIL B

(Reinforcement in bottom slab omitted for clarity)

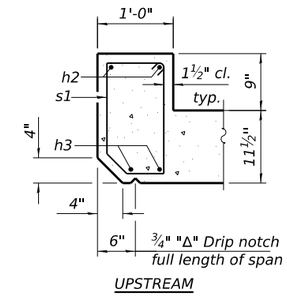

DETAIL C

(Reinforcement in top slab omitted for clarity)

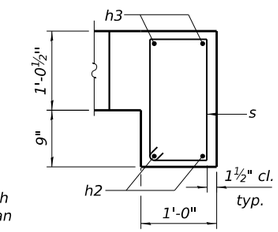

DETAIL D

(Reinforcement in bottom slab omitted for clarity)

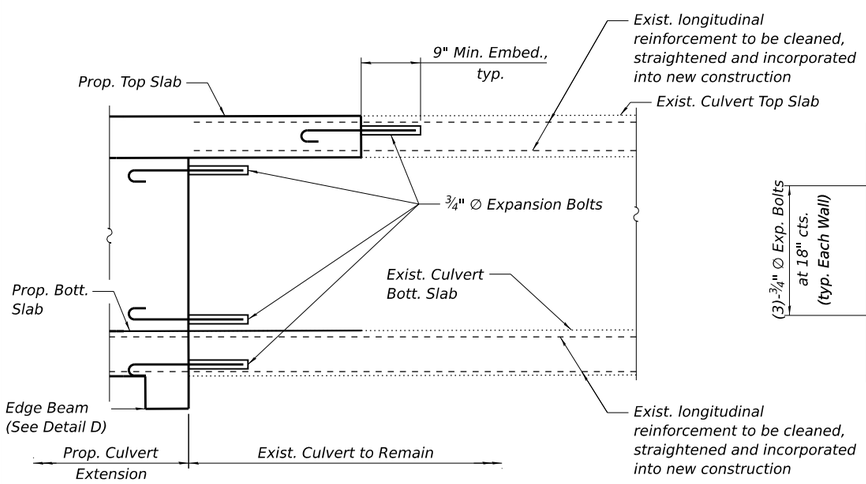

PARTIAL LONGITUDINAL SECTION AT EXIST. CULVERT REMOVAL LINE

(Reinforcement in proposed portion of culvert not shown for clarity)
(North Extension shown; South Extension similar but opposite hand)

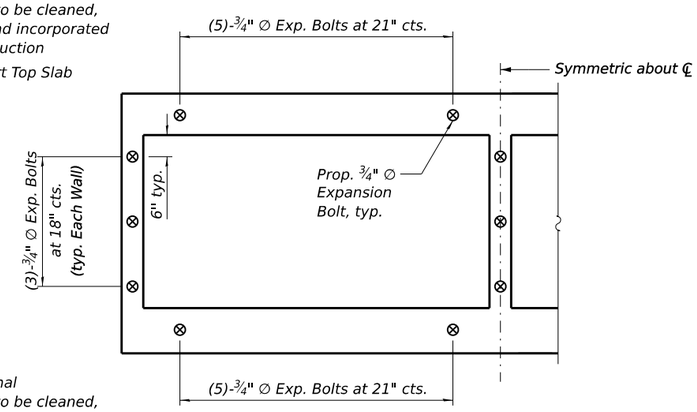

HALF-SECTION THRU BARRELS

(Showing ¾" ∅ Expansion Bolts only)

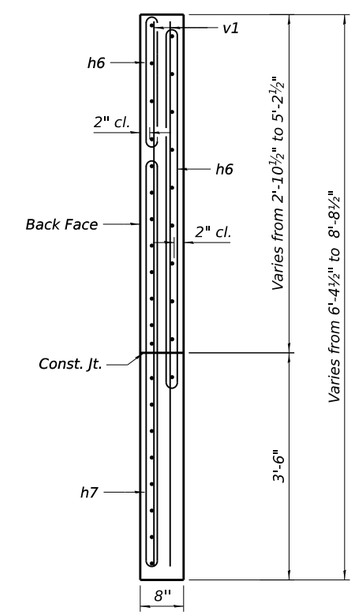

SECTION A-A

NOTES:

1. For additional details, bar diagrams, and Bill of Material, see Sheet S1-11
2. Expansion bolts shall be ¾" ∅ hooked bolts. Hooked bolts shall extend a minimum of 9" into new concrete.

MODEL: Default
FILE NAME: P:\2001-818 PTB 194-021 (D2) IL 38 @ I-39 (CBBEL)\Sheet Files\Final Plans\0171196-D9200120-S08-Sec&Dets2.dgn
2/17/2025 11:47:51 AM

HBM ENGINEERING GROUP, LLC

USER NAME =	DESIGNED - JJS, IAL	REVISED -	
	CHECKED - MI	REVISED -	
PLOT SCALE =	DRAWN - EN, AWD	REVISED -	
PLOT DATE =	CHECKED - MI	REVISED -	

STATE OF ILLINOIS
DEPARTMENT OF TRANSPORTATION

CULVERT SECTIONS AND DETAILS (SHEET 3 OF 4)
STRUCTURE NUMBER 071-1196

SHEET S1-10 OF S1-13 SHEETS

F.A.* RTE.	SECTION	COUNTY	TOTAL SHEETS	SHEET NO.
*	141-1HBR-3 & (9,10)R-3	OGLE	508	302
		CONTRACT NO. 64N98		
	ILLINOIS	FED. AID PROJECT		

*FAI ROUTE 39 (I-39) & FAP 567 (IL 38)

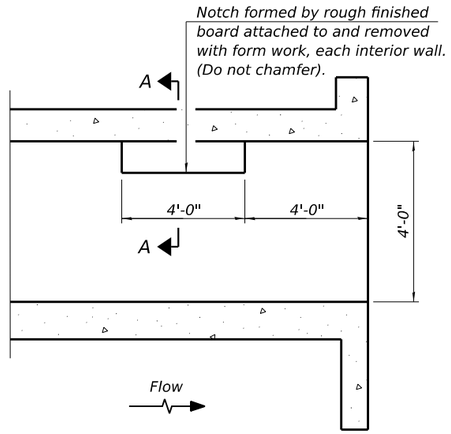

LONGITUDINAL SECTION

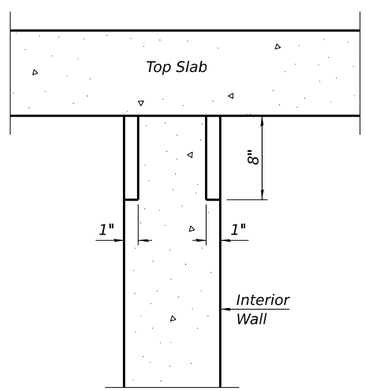

SECTION A-A

PHOEBE NESTING SITE DETAILS
(Downstream End Only)

*Nonwoven geotextile fabric shall conform to the requirements of Article 1080.01 of the Standard Specifications. The minimum weight of the fabric shall be 6 ounces per square yard.

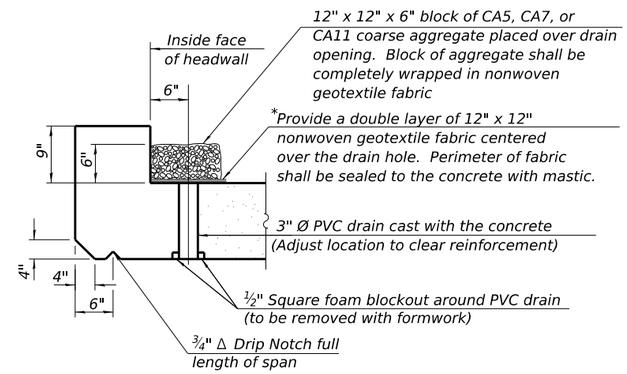

AT UPSTREAM END

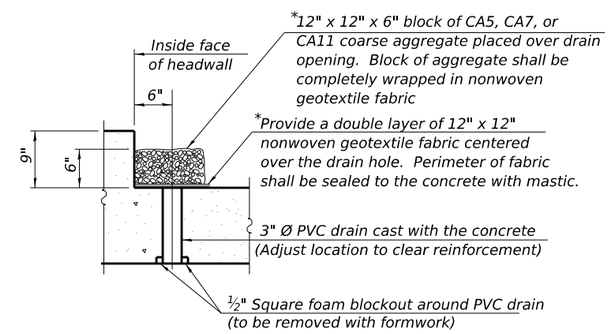

AT DOWNSTREAM END

DRAIN DETAIL
(All costs associated with furnishing and constructing the above drain detail will not be measured for payment but shall be included in the contract unit price for the associated work.)

BILL OF MATERIAL

Bar	No.	Size	Length	Shape
a	670	#7	18'-10"	
a1	449	#10	17'-2"	
a2	2	#4	17'-2"	
d	38	#4	4'-5"	
h	114	#5	28'-9"	
h1	114	#5	30'-11"	
h2	8	#7	17'-2"	
h3	8	#6	17'-2"	
h4	114	#5	27'-4"	
h5	114	#5	29'-6"	
h6	56	#4	8'-0"	
h7	64	#4	10'-6"	
h8	45	#4	27'-1"	
h9	45	#4	29'-3"	
s	57	#4	5'-1"	
s1	19	#4	4'-11"	
v	537	#5	5'-7"	
v1	16	#4	8'-4"	
Reinforcement Bars			Pound	79350
Expansion Bolts 3/4 Inch			Each	58
Concrete Box Culverts			Cu Yd	260.7
Epoxy Crack Injection			Foot	92
Box Culverts To Be Cleaned			Foot	297
Structural Repair Of Concrete (Depth Equal To Or Less Than 5 Inches)			Sq Ft	1

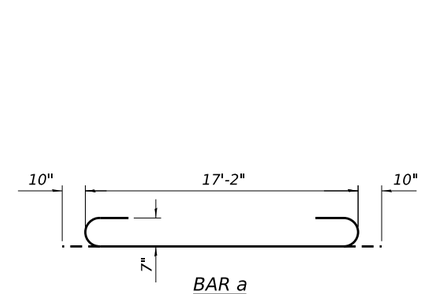

BAR a

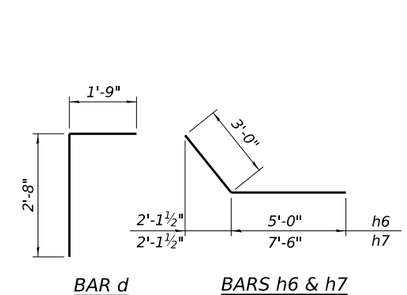

BAR d

BARS h6 & h7

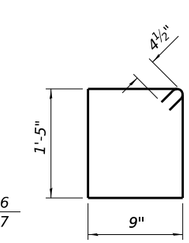

BAR s

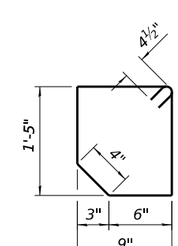

BAR s1

MODEL: Default
FILE NAME: P:\2001-818 PTB 194-021 (D2) IL 38 @ I-39 (CBBEL)\Sheet Files\Final Plans\0171196-D9200120-S09-Sec6.Dets3.dgn
2/17/2025 11:48:19 AM

HBM ENGINEERING GROUP, LLC

USER NAME =	DESIGNED - JJS, IAL	REVISED -	
	CHECKED - MI	REVISED -	
PLOT SCALE =	DRAWN - EN, AWD	REVISED -	
PLOT DATE =	CHECKED - MI	REVISED -	

STATE OF ILLINOIS
DEPARTMENT OF TRANSPORTATION

CULVERT SECTIONS AND DETAILS (SHEET 4 OF 4)
STRUCTURE NUMBER 071-1196

SHEET S1-11 OF S1-13 SHEETS

F.A.* RTE.	SECTION	COUNTY	TOTAL SHEETS	SHEET NO.
*	141-1HBR-3 & (9,10)R-3	OGLE	508	303
		CONTRACT NO. 64N98		
	ILLINOIS	FED. AID PROJECT		

*FAI ROUTE 39 (I-39) & FAP 567 (IL 38)

Illinois Department of Transportation
Division of Highways
IDOT

SOIL BORING LOG

Page 1 of 1

Date 7/23/24

ROUTE FAI 39 & FAP 567 DESCRIPTION P92-016-09 - Culvert extension LOGGED BY W. Garza

SECTION 141-1HBR-3 & (9,10)R-3 LOCATION Dement, SE 1/4 & NE 1/4 20, SEC. , TWP. 40N, RNG. 2E

COUNTY Ogle DRILLING METHOD Hollow Stem Auger HAMMER TYPE CME-45 Automatic

STRUCT. NO.
Station

Latitude 41° 56' 05.83" Longitude -89° 01' 38.61"
Northing 1,920,881.0477 Easting 2,606,560.3508

BORING NO. CUL 1
Station 656+42
Offset 167.00ft Lt
Ground Surface Elev. 798.20 ft

Surface Water Elev. 793.71 ft
Stream Bed Elev. 793.21 ft

Groundwater Elev.:
First Encounter 788.7 ft ▼
Upon Completion 788.7 ft ▽
After ____ Hrs. ____ ft

Description	Elev.	DEPTH (ft)	BLOWS (/6")	UCS Qu (tsf)	MOIST (%)
MEDIUM light brown SILTY CLAY LOAM	797.20			0.8 P	16.7
STIFF gray SILTY CLAY LOAM	794.70		3 4 5	1.2 B	24.6
SOFT gray SANDY LOAM	791.70	-5	1 2 3	0.3 P	27.1
VERY DENSE yellow WEATHERED LIMESTONE	789.70		4 45 50 for 4"		15.9
VERY DENSE yellow WEATHERED LIMESTONE	788.20	-10	100 for 1"		
End of Boring		-15			
		-20			

Northing and Easting were calculated using the ILHP-WF coordinate system

The Unconfined Compressive Strength (UCS) Failure Mode is indicated by (B-Bulge, S-Shear, P-Penetrometer)
The SPT (N value) is the sum of the last two blow values in each sampling zone (AASHTO T206)

BBS, from 137 (Rev. 8-99)

Illinois Department of Transportation
Division of Highways
IDOT

SOIL BORING LOG

Page 1 of 1

Date 7/9/24

ROUTE FAI 39 & FAP 567 DESCRIPTION P92-016-09 - Culvert extension LOGGED BY W. Garza

SECTION 141-1HBR-3 & (9,10)R-3 LOCATION Dement, SE 1/4 & NE 1/4 20, SEC. , TWP. 40N, RNG. 2E

COUNTY Ogle DRILLING METHOD Hollow Stem Auger HAMMER TYPE CME-45 Automatic

STRUCT. NO.
Station

Latitude 41° 56' 02.86" Longitude -89° 01' 39.29"
Northing 1,920,579.7336 Easting 2,606,512.6496

BORING NO. CUL 4
Station 655+80
Offset 152.00ft Rt
Ground Surface Elev. 795.20 ft

Surface Water Elev. 793.41 ft
Stream Bed Elev. 793.21 ft

Groundwater Elev.:
First Encounter 786.7 ft ▼
Upon Completion Dry ft
After ____ Hrs. ____ ft

Description	Elev.	DEPTH (ft)	BLOWS (/6")	UCS Qu (tsf)	MOIST (%)
MEDIUM brown SILTY CLAY LOAM	794.20			1.0	29.0
MEDIUM gray SANDY LOAM with MEDIUM SAND LENS	792.20		3 P 4 5	0.9 P	18.5
MEDIUM gray MOIST MEDIUM SAND	789.70	-5	4 6 10		14.1
STIFF gray CLAY LOAM TILL	787.70		3 3 4	1.1 P	17.5
STIFF gray CLAY LOAM with LIMESTONE FRAGMENTS and 5.8% ORGANICS	785.20	-10	3 4 6	1.2 B	47.3
STIFF gray CLAY LOAM with SILT LENS	782.20		2 4 6	1.4 B	23.7
VERY DENSE light gray WEATHERED LIMESTONE	780.20	-15	100 for 1"		
End of Boring		-20			

Northing and Easting were calculated using the ILHP-WF coordinate system

The Unconfined Compressive Strength (UCS) Failure Mode is indicated by (B-Bulge, S-Shear, P-Penetrometer)
The SPT (N value) is the sum of the last two blow values in each sampling zone (AASHTO T206)

BBS, from 137 (Rev. 8-99)

MODEL: Default
FILE NAME: P:\2001-818 PTB 194-021 (D2) IL 38 @ I-39 (CBBEL)\Sheet Files\Final Plans\0171196-D9200120-S10-Boring Log 1.dgn
2/17/2025 11:48:26 AM

HBM ENGINEERING GROUP, LLC

USER NAME =	DESIGNED - JJS, IAL	REVISED -	
	CHECKED - MI	REVISED -	
PLOT SCALE =	DRAWN - EN, AWD	REVISED -	
PLOT DATE =	CHECKED - MI	REVISED -	

STATE OF ILLINOIS
DEPARTMENT OF TRANSPORTATION

SOIL BORING LOGS (SHEET 1 OF 2)
STRUCTURE NUMBER 071-1196

SHEET S1-12 OF S1-13 SHEETS

F.A.* RTE.	SECTION	COUNTY	TOTAL SHEETS	SHEET NO.
*	141-1HBR-3 & (9,10)R-3	OGLE	508	304
		CONTRACT NO. 64N98		
	ILLINOIS	FED. AID PROJECT		

*FAI ROUTE 39 (I-39) & FAP 567 (IL 38)

Illinois Department of Transportation
Division of Highways
IDOT

SOIL BORING LOG

Page 1 of 1

Date 7/10/24

ROUTE FAI 39 & FAP 567 DESCRIPTION P92-016-09 - Overhead sign truss LOGGED BY W. Garza

SECTION 141-1HBR-3 & (9,10)R-3 LOCATION Dement, SE 1/4 & NE 1/4 20, SEC. , TWP. 40N, RNG. 2E

COUNTY Ogle DRILLING METHOD Hollow Stem Auger HAMMER TYPE CME-45 Automatic

STRUCT. NO.
Station

Latitude 41° 56' 04.32" Northing 1,920,729.2580
Longitude -89° 01' 38.08" Easting 2,606,602.1002

BORING NO. OHS 1
Station 656+76
Offset 1.00ft Lt
Ground Surface Elev. 816.90 ft

Surface Water Elev. ft
Stream Bed Elev. ft

Groundwater Elev.:
First Encounter ft
Upon Completion ft
After ____ Hrs. ft

Description	Elev.	DEPTH (ft)	BLOWS (/6")	UCS Qu (tsf)	MOIST (%)
MEDIUM dark brown SILTY CLAY LOAM	815.40			0.6 P	14.7
DENSE tan SANDY GRAVEL	813.40		14 14 29		9.7
VERY DENSE light gray SANDY GRAVEL	810.90	-5	23 25 30		4.3
VERY DENSE tan SANDY GRAVEL	808.40		20 35 23		8.3
MEDIUM light gray DIRTY SAND	805.40	-10	10 13 15		8.1
DENSE light gray SANDY GRAVEL	803.40		22 22 16		6.1
STIFF gray SANDY LOAM with GRAVEL	800.90	-15	6 5 6	1.2 P	10.4
STIFF gray CLAY LOAM TILL	798.40		6 8 10	1.8 P	20.8
No recovery		-20	8		
No recovery *(continued)*	795.90		11 11		
STIFF gray SILTY CLAY LOAM with TILL	793.40		3 3 5	2.0 B	16.5
STIFF dark gray SILTY CLAY LOAM with CONCRETE FRAGMENTS (old road?)	790.90	-25	7 5 8	1.1 B	23.8
End of Boring		-30			
		-35			
		-40			

Northing and Easting were calculated using the ILHP-WF coordinate system

The Unconfined Compressive Strength (UCS) Failure Mode is indicated by (B-Bulge, S-Shear, P-Penetrometer)
The SPT (N value) is the sum of the last two blow values in each sampling zone (AASHTO T206)

BBS, from 137 (Rev. 8-99)

Illinois Department of Transportation
Division of Highways
IDOT

SOIL BORING LOG

Page 1 of 1

Date 7/9/24

ROUTE FAI 39 & FAP 567 DESCRIPTION P92-016-09 - Overhead sign truss LOGGED BY W. Garza

SECTION 141-1HBR-3 & (9,10)R-3 LOCATION Dement, SE 1/4 & NE 1/4 20, SEC. , TWP. 40N, RNG. 2E

COUNTY Ogle DRILLING METHOD Hollow Stem Auger HAMMER TYPE CME-45 Automatic

STRUCT. NO.
Station

Latitude 41° 56' 03.28" Northing 1,920,623.9086
Longitude -89° 01' 37.76" Easting 2,606,627.9930

BORING NO. OHS 2
Station 657+00
Offset 111.00ft Rt
Ground Surface Elev. 803.10 ft

Surface Water Elev. ft
Stream Bed Elev. ft

Groundwater Elev.:
First Encounter 788.1 ft ▼
Upon Completion 783.6 ft ▽
After ____ Hrs. ft

Description	Elev.	DEPTH (ft)	BLOWS (/6")	UCS Qu (tsf)	MOIST (%)
MEDIUM black SILTY CLAY LOAM	801.60			0.9 P	31.1
STIFF gray SILTY CLAY LOAM TILL	800.10		4 6 5	1.1 P	14.2
VERY STIFF gray CLAY LOAM TILL	797.60	-5	4 6 7	2.1 B	24.9
VERY STIFF light gray CLAY LOAM TILL	794.60		5 6 8	2.5 B	20.1
MEDIUM tan/light gray SAND with MEDIUM GRAVEL	792.60	-10	2 4 7		8.7
MEDIUM light gray MOIST MEDIUM SAND	789.60		8 13 14		11.6
MEDIUM gray SANDY LOAM with MEDIUM SAND LENS BOTTOM 6"	787.10	▼ -15	4 6 12	0.9 P	12.7
VERY DENSE light gray WEATHERED LIMESTONE	785.10		40 100 for 5.5"		17.8
VERY DENSE light gray WEATHERED LIMESTONE		▽ -20	100 for		
	782.60		1"		
End of Boring		-25			
		-30			
		-35			
		-40			

Northing and Easting were calculated using the ILHP-WF coordinate system

The Unconfined Compressive Strength (UCS) Failure Mode is indicated by (B-Bulge, S-Shear, P-Penetrometer)
The SPT (N value) is the sum of the last two blow values in each sampling zone (AASHTO T206)

BBS, from 137 (Rev. 8-99)

MODEL: Default
FILE NAME: P:\2001-818 PTB 194-021 (D2) IL 38 @ I-39 (CBBEL)\Sheet Files\Final Plans\0171196-D9200120-S10-Boring Log 2.dgn
2/17/2025 11:48:35 AM

HBM ENGINEERING GROUP, LLC

USER NAME =	DESIGNED - JJS, IAL	REVISED -
	CHECKED - MI	REVISED -
PLOT SCALE =	DRAWN - EN, AWD	REVISED -
PLOT DATE =	CHECKED - MI	REVISED -

STATE OF ILLINOIS
DEPARTMENT OF TRANSPORTATION

SOIL BORING LOGS (SHEET 2 OF 2)
STRUCTURE NUMBER 071-1196
SHEET S1-13 OF S1-13 SHEETS

F.A.* RTE.	SECTION	COUNTY	TOTAL SHEETS	SHEET NO.
*	141-1HBR-3 & (9,10)R-3	OGLE	508	305
		CONTRACT NO. 64N98		
	ILLINOIS	FED. AID PROJECT		

*FAI ROUTE 39 (I-39) & FAP 567 (IL 38)

Bench Mark: ASE401 Set cut X on light pole foundation south of Wendys Parking Lot. Elev. 792.25

Existing Structure: The structure carrying IL 38 (SN 071-0058) over I - 39 & US 51 was originally built in 1980 as IL Route 38 over F.A. RTE 412 under Project FF-FFG-412-5(9), Section 141-1HB- 3. The original construction consisted of an 8" concrete slab supported by two-span continuous 48" steel plate girders. The original superstructure provided two 12'-0" traffic lanes separated by an 18'-0" wide raised concrete median, a 9'-3" outside shoulder along the north and south side, and two 1'-9" parapets. The total out to out deck width is 92'-0". The superstructure is supported by abutments and a single pier. The abutments are vaulted abutments with H piles and the pier is a multicolumn pier supported with H piles. The approach spans at the vaulted abutments are 24'-6" end to end. The approach span is 92'-0" wide, 15" thick, and has an 18'-0" median. The approach spans are supported on abutments and approach bents.

Traffic will be maintained by Stage Construction.

Salvage: None

BYPASS FLOWRATE FROM BRIDGE LIMITS (END OF APPROACH SLAB) TO ROADWAY

	NW Curbline	SW Curbline	NE Curbline	SE Curbline
Q (C.F.S.)	0.565	0.565	0.822	0.822

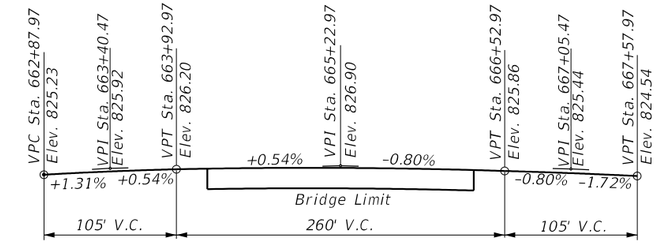

PROFILE-IL RTE. 38

(Along ℄ IL RTE. 38)

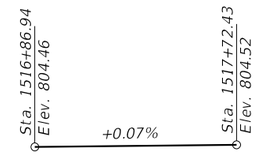

EXISTING PROFILE- F.A.I. RTE. 39 (NB)

(Along ℄ NB Lanes)

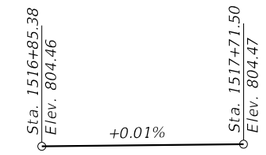

EXISTING PROFILE- F.A.I. RTE. 39 (SB)

(Along ℄ SB Lanes)

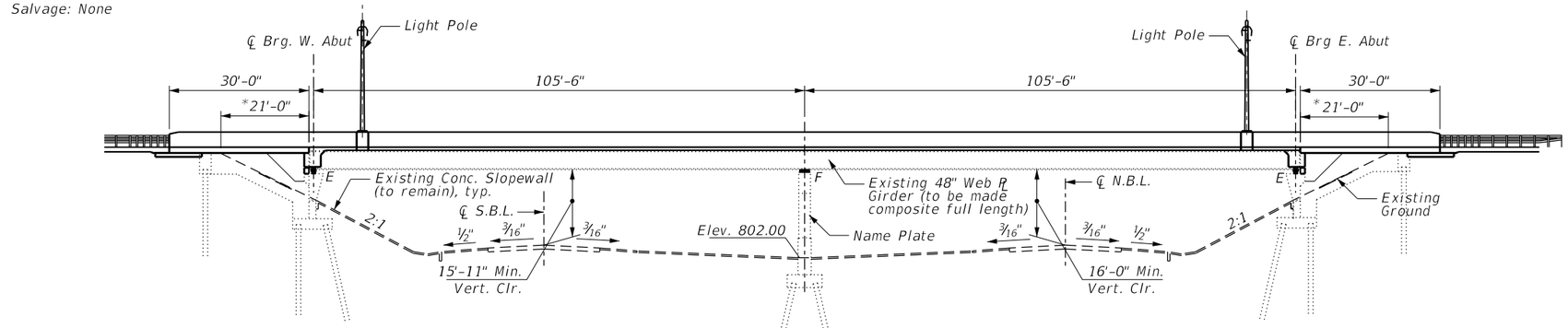

ELEVATION

* Contractor shall provide formwork/falsework to construct the approach slab outside of vaulted wall. Cost included in Concrete Superstructure (Approach Slab).

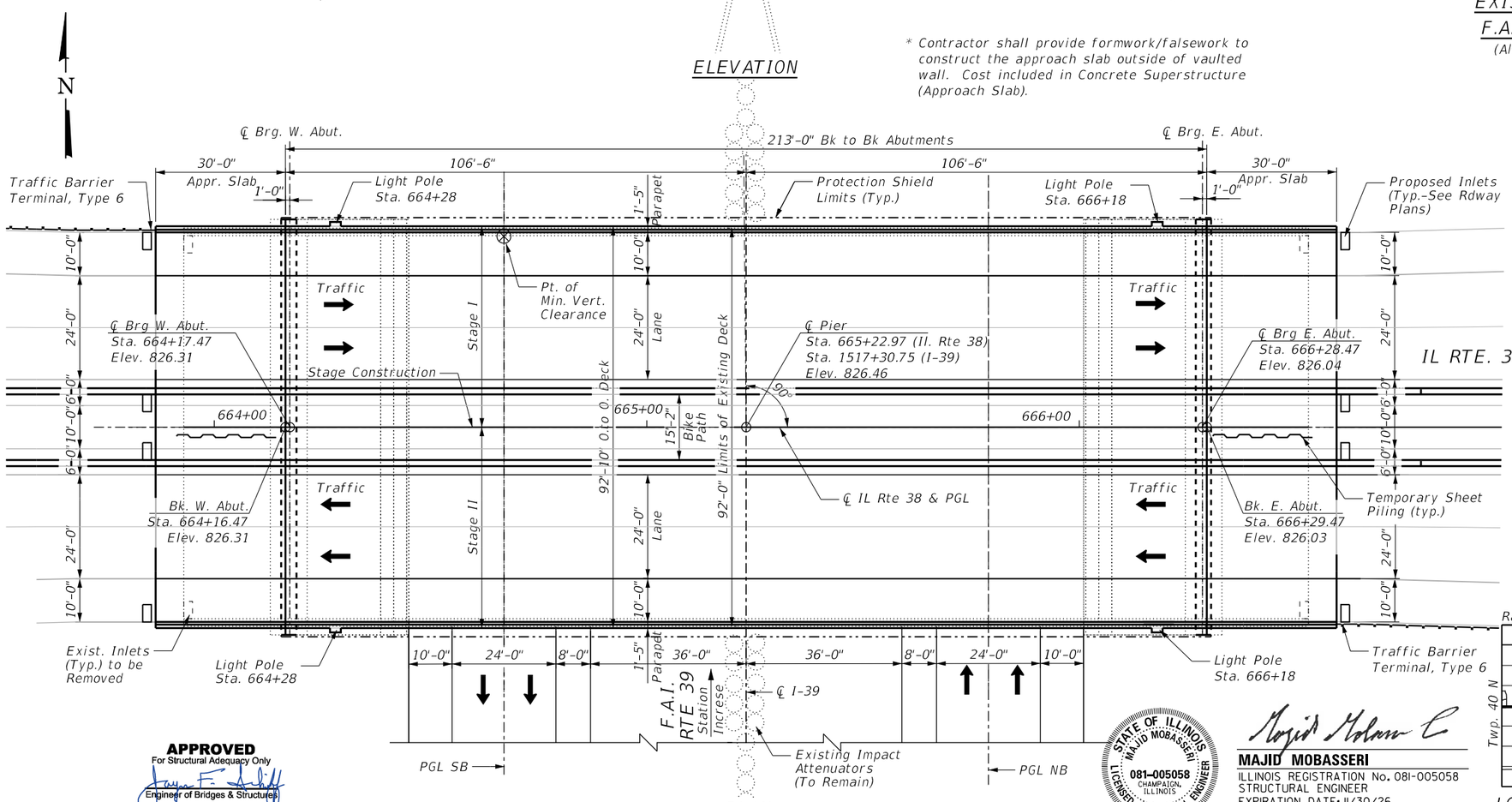

PLAN

DESIGN SPECIFICATIONS

2002 AASHTO Standard Specifications for Highway Bridges, 17th Edition

2006 Seismic Retrofitting Manual for Highway Structures: Part I-Bridges (FHWA-HRT-06-032)

LOADING HS-20

Allow 25#/sq. ft. for future wearing surface
Max LL Deflection < Span Length /1000

DESIGN STRESSES

FIELD UNITS (New)

f'c = 4,000 psi (Superstructure)
fy = 60,000 psi (Reinforcement)

FIELD UNITS (Existing)

fc = 1,400 psi
fs = 20,000 psi (Reinforcement)
fs = 27,000 psi (Structural Steel)

SEISMIC DATA

Seismic Retrofit Category (SRC) = A
Design Spectral Acceleration at 1.0 sec. (SD1) =0.086 g
Design Spectral Acceleration at 0.2 sec. (SDS) =0.150 g
Soil Site Class = D
Performance Level = I

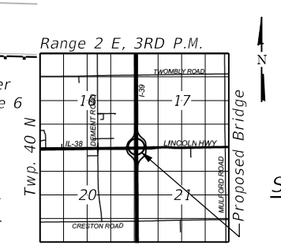

LOCATION SKETCH

GENERAL PLAN AND ELEVATION
ILLINOIS RTE. 38 OVER I-39
F.A.P. 567
SECTION 141-1HBR-3 & (9,10)R-3
OGLE COUNTY
STA. 665+22.97
S.N. 071-0058

APPROVED
For Structural Adequacy Only
Engineer of Bridges & Structures

STATE OF ILLINOIS
MAJID MOBASSERI
081-005058
CHAMPAIGN, ILLINOIS
LICENSED STRUCTURAL ENGINEER

MAJID MOBASSERI
ILLINOIS REGISTRATION No. 081-005058
STRUCTURAL ENGINEER
EXPIRATION DATE: 11/30/26

MODEL: Default
FILE NAME: N:\IDOT\220628\CAD_Sheets\Structures\01-220628-GPE.sht

CHRISTOPHER B. BURKE ENGINEERING, LTD.
9575 W. Higgins Road, Suite 600
Rosemont, Illinois 60018
(847) 823-0500

USER NAME = jjeziemy	DESIGNED - MM	REVISED -	
	DRAWN - PDR	REVISED -	
	CHECKED - CF	REVISED -	
PLOT DATE = 3/21/2025	DATE -	REVISED -	

STATE OF ILLINOIS
DEPARTMENT OF TRANSPORTATION

GENERAL PLAN AND ELEVATION
STRUCTURE NO. 071-0058

SCALE: | SHEET S-1 OF S-29 SHEETS | STA. | TO STA.

F.A.* RTE.	SECTION	COUNTY	TOTAL SHEETS	SHEET NO.
*	141-1HBR-3 & (9,10) R-3	OGLE	508	306
		CONTRACT NO. 64N98		
		ILLINOIS	FED. AID PROJECT	

*FAI ROUTE 39 (I-39) & FAP 567 (IL 38)

GENERAL NOTES:

1. Fasteners shall be ASTM F 3125 Grade A325 Type 1, mechanically galvanized bolts in painted areas. Bolts ¾ in. diameter, holes 13/16 in. diameter, unless otherwise noted.

2. No field welding is permitted except as specified in the contract documents.

3. Reinforcement bars designated (E) shall be epoxy coated.

4. Prior to pouring the new concrete deck, all heavy or loose rust, loose mill scale, and other loose detrimental foreign material shall be removed from the surfaces in contact with concrete (SSPC SP3 standards). Tightly adhered paint may remain unless otherwise noted. Removal shall be accomplished by methods that will not damage the steel and the cost will be paid for according to Article 109.04 of the Standard Specifications.

   As directed by the Engineer, existing construction accessories welded to the top flange of beams and girders shall be removed. The weld areas shall be ground flush and inspected for cracks using magnetic particle testing (MT) or dye penetrant testing (PT) by qualified personnel approved by the Engineer. Any cracks that cannot be removed by grinding ¼ in. deep shall be identified and reported to the Bureau of Bridges & Structures for further disposition. The cost of removing welded accessories, grinding and inspecting weld areas and grinding cracks will be paid for according to Article 109.04 of the Standard Specifications.

5. If the Contractor elects to use cantilever forming brackets on the exterior beams or girders, the brackets shall be placed at the same locations as required for the hardwood blocks in Article 503.06(b) of the Standard Specifications. If additional cantilever forming brackets are required, hardwood blocking shall be wedged between the exterior and first interior beam at each of these additional bracket locations.

6. Plan dimensions and details relative to the existing structure have been taken from existing plans are subject to nominal construction variations. The Contactor shall field verify existing dimensions and details affecting new construction and make necessary approved adjustments prior to construction or ordering of materials. Such variations shall not be cause for additional compensation for a change in scope of the work, however, the Contractor will be paid for the quantity actually furnished at the unit price bid for the work.

7. All new structural steel shall be shop painted with an inorganic zinc rich primer per AASHTO M 300, Type 1.

8. Cleaning and painting of the existing structural steel shall be as specified in the special provision for "Cleaning and Painting Existing Steel Structures". All beams, bearings and other structural steel shall be cleaned per Near White Blast Cleaning SSPC- SP10. The exterior surface and bottom of the bottom flange of the fascia beams shall be cleaned per Commercial Grade Power Too Cleaning SSPC- SP15.

   The designated areas cleaned per Near White Blast Cleaning and per Commercial Grade Power Tool Cleaning shall be painted according to the requirements of Organic Zinc Rich Primer / Epoxy / Urethane paint system. The color of the final finish coat for all interior steel surfaces shall be Gray, Munsell No 5B 7/1. The color of the final finish coat for the exterior and bottom flange of the fascia beams shall be blue, Munsell No. 10B 3/6.

9. Cost of removal and re-installation of all members necessary to complete the work as detailed on the plans and as specified in the Special Provisions shall be included with Furnishing and Erecting Structural Steel.

10. The existing structural steel coating contains lead. The Contractor shall take appropriate precautions to deal with the presence of lead on this project.

11. Existing structural steel that will be in contact with new structural steel shall be cleaned and painted prior to erection as required by the Special Provision "Cleaning and Painting Contact Surface Areas of Existing Steel Structures", and the Standard Specifications. The color of the final finish coat shall be Grey, Munsell No. 5B 7/1. Cost included with Furnishing and Erecting Structural Steel.

INDEX OF SHEETS

STA. 605+22.97
RE-BUILT BY
STATE OF ILLINOIS
IL. Rt. 38 F.A.P. 567
SECTION 141-1HBR-3
& (9,10)R-3
LOADING HS-20
STR. NO. 071-0058

NAME PLATE

See Std. 515001

Proposed name plate shall be installed next to existing name plate. Cost of installation included with "Name Plates".

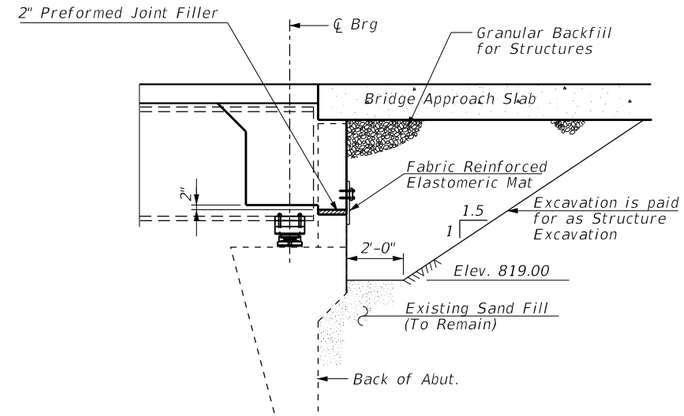

TYPICAL ABUTMENT DETAILS

SCOPE OF WORK

1. Remove and replace the existing deck slab.
2. Remove the existing vaulted approach spans and replace with standard bridge approach slabs.
3. Install interior diaphragms between beams 6 & 7.
4. Remove the existing rocker bearing and install elastomeric bearings.
5. Add steel extensions at the top of new elastomeric bearings.
6. Remove and eliminate the existing expansion joints at the abutments by using to semi-integral abutment detail.
7. Repair abutments and curtain walls as required.
8. Install light poles on bridge.
9. Clean and paint all the beams and diaphragms.
10. Repair slopewalls.

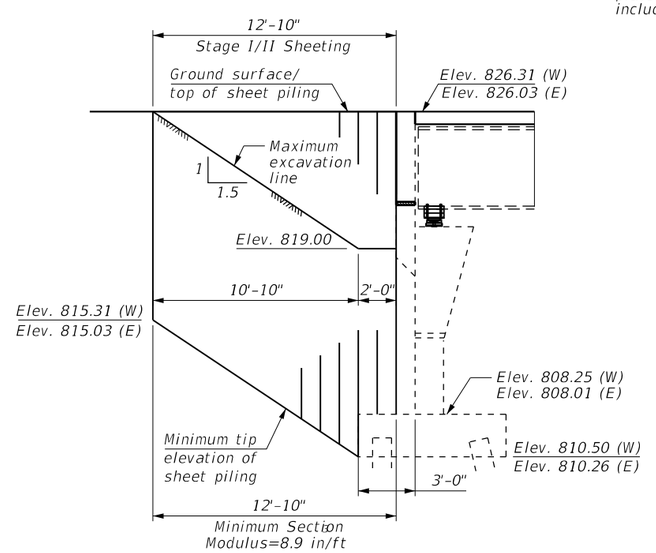

TEMPORARY SHEET PILING

TOTAL BILL OF MATERIAL

PAY ITEM NAME	UNIT	SUPER	SUB	TOTAL
Concrete Removal	CU YD		58.2	58.2
Removal of Existing Concrete Deck	EACH	1		1
Protective Shield	SQ YD	2,180		2,180
Structure Excavation	CU YD		180	180
Concrete Structures	CU YD		57.1	57.1
Concrete Superstructure	CU YD	731.9		731.9
Bridge Deck Grooving	SQ YD	2,184		2,184
Protective Coat	SQ YD	3,605		3,605
Concrete Superstructure (Approach Slab)	CU YD	257.9		257.9
Furnishing and Erecting Structural Steel	POUND	6,510		6,510
Stud Shear Connectors	EACH	1,044		1,044
Reinforcement Bars (Epoxy Coated)	POUND	267,210	9,830	277,040
Bar Splicers	EACH	945	80	1,025
Parapet Railing	FOOT	546		546
Name Plates	EACH	1		1
Elastomeric Bearing Assembly, Type 1	EACH	24		24
Anchor Bolts, 1"	EACH	48		48
Temporary Sheet Piling	SQ FT		390	390
Granular Backfill for Structures	CU YD		180	180
Epoxy Crack Injection	FOOT		147	147
Slopewall Crack Sealing	FOOT		616	616
Bar Terminators	EACH	516		516
Jack and Remove Existing Bearings	EACH	24		24
Containment and Disposal of Lead Paint Cleaning Residues	L SUM	1		1
Cleaning and Painting Steel Bridge No. 1	L SUM	1		1
Structural Repair of Concrete (Depth Equal to or Less Than 5 Inches)	SQ FT		378	378
Structural Repair of Concrete (Depth Greater Than 5 Inches)	SQ FT		15	15

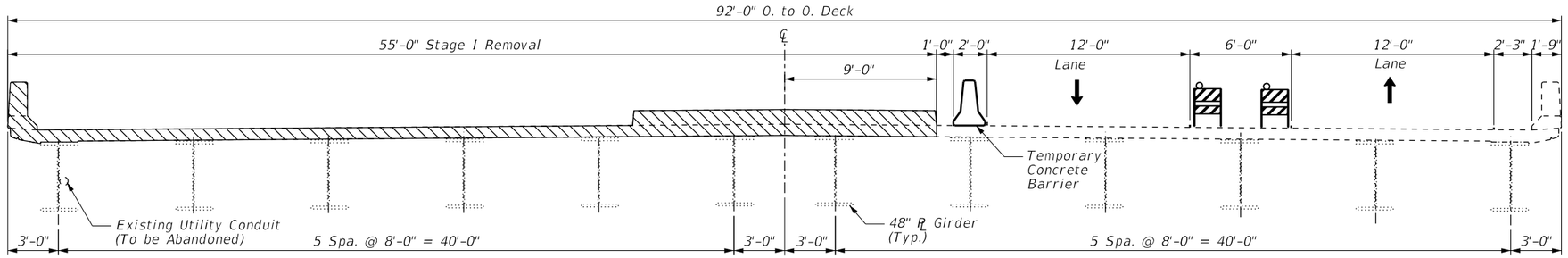

STAGE I REMOVAL

(Looking East)

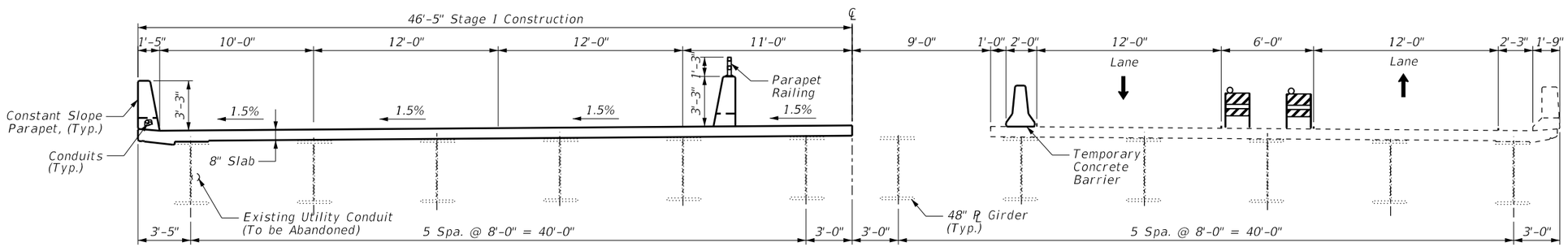

STAGE I CONSTRUCTION

(Looking East)

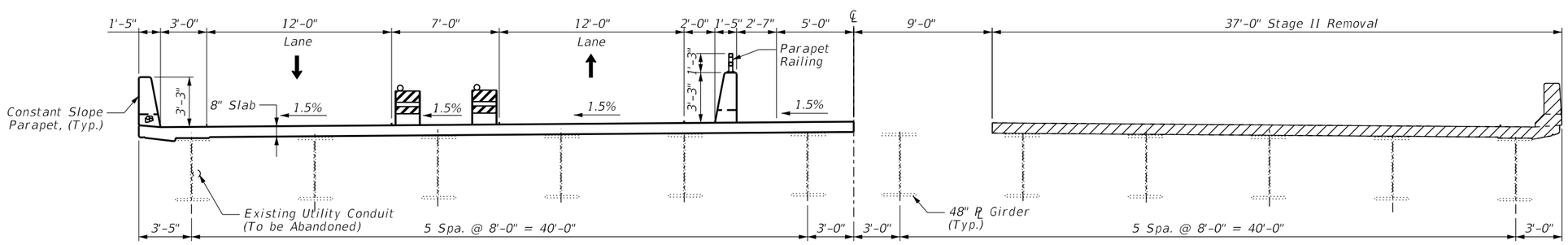

STAGE II REMOVAL

(Looking East)

Notes:

1.) Hatched area indicates "Removal of Existing Concrete Deck"
2.) For details of Temporary Concrete Barrier, see Sheet S-7 of S-29.
3.) For quantity of Temporary Concrete Barrier, see Roadway Plans.

MODEL: Default
FILE NAME: N:\IDOT\220628\CAD_Sheets\Structures\03-220628-Stage Construction_01.sht

CHRISTOPHER B. BURKE ENGINEERING, LTD.
9575 W. Higgins Road, Suite 600
Rosemont, Illinois 60018
(847) 823-0500

USER NAME = jjezierny	DESIGNED - MM	REVISED -	
	DRAWN - PDR	REVISED -	
	CHECKED - CF	REVISED -	
PLOT DATE = 3/21/2025	DATE -	REVISED -	

STATE OF ILLINOIS
DEPARTMENT OF TRANSPORTATION

STAGE CONSTRUCTION (1 OF 4)
STRUCTURE NO. 071-0058

SCALE: | SHEET S-3 OF S-29 SHEETS | STA. TO STA.

F.A.* RTE.	SECTION	COUNTY	TOTAL SHEETS	SHEET NO.
*	141-1HBR-3 & (9,10) R-3	OGLE	508	308
		CONTRACT NO. 64N98		
	ILLINOIS	FED. AID PROJECT		

*FAI ROUTE 39 (I-39) & FAP 567 (IL 38)

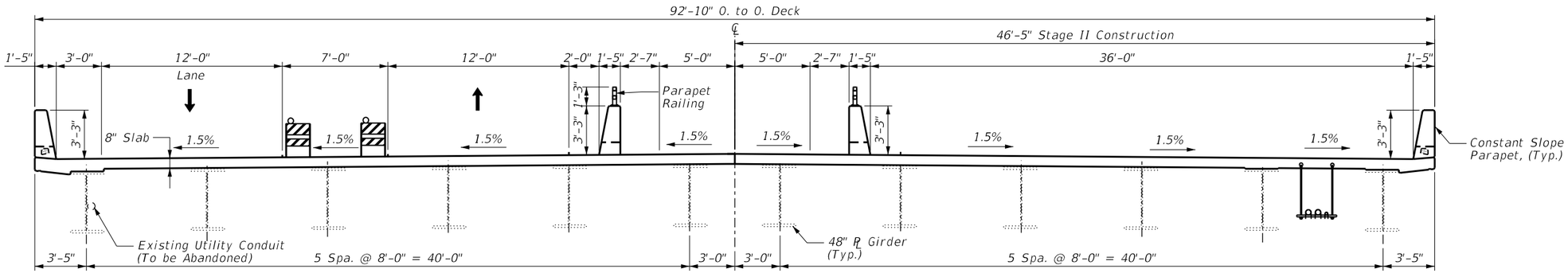

STAGE II CONSTRUCTION

(Looking East)

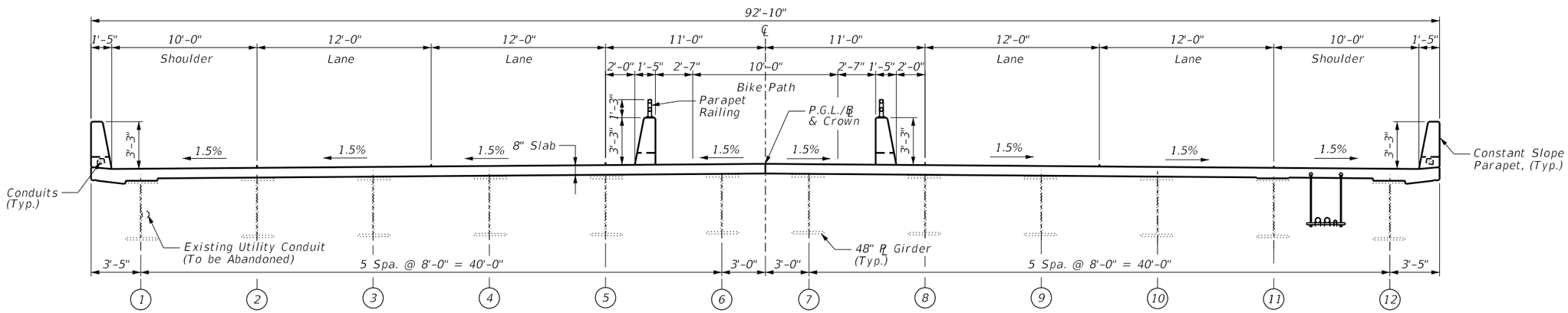

FINAL TYPICAL SECTION

(Looking East)

MODEL: Default
FILE NAME: N:\DOT\220628\CAD_Sheets\Structures\04-220628-Stage Construction_02.sht

CHRISTOPHER B. BURKE ENGINEERING, LTD. 9575 W. Higgins Road, Suite 600 Rosemont, Illinois 60018 (847) 823-0500	USER NAME = jjeziemy	DESIGNED - MM	REVISED -	STATE OF ILLINOIS DEPARTMENT OF TRANSPORTATION	STAGE CONSTRUCTION (2 OF 4) STRUCTURE NO. 071-0058	F.A.* RTE.	SECTION	COUNTY	TOTAL SHEETS	SHEET NO.
		DRAWN - PDR	REVISED -			*	141-1HBR-3 & (9,10) R-3	OGLE	508	309
		CHECKED - CF	REVISED -					CONTRACT NO. 64N98		
	PLOT DATE = 3/21/2025	DATE -	REVISED -		SCALE: SHEET S-4 OF S-29 SHEETS STA. TO STA.		ILLINOIS	FED. AID PROJECT		

*FAI ROUTE 39 (I-39) & FAP 567 (IL 38)

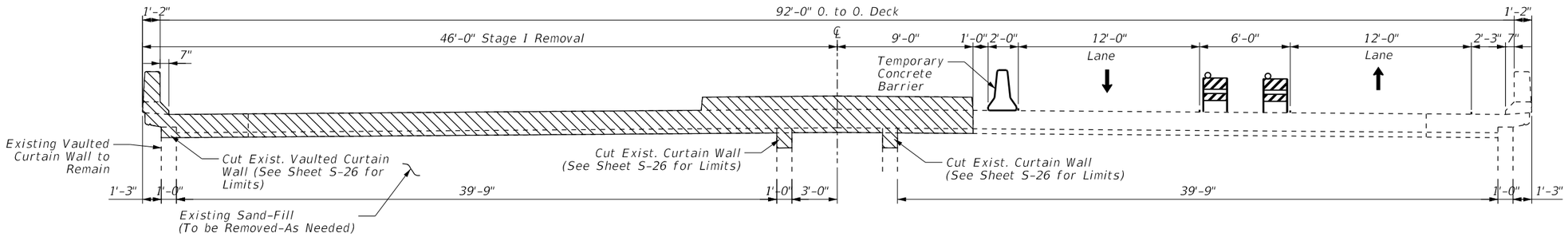

STAGE I APPROACH REMOVAL

(Looking East)

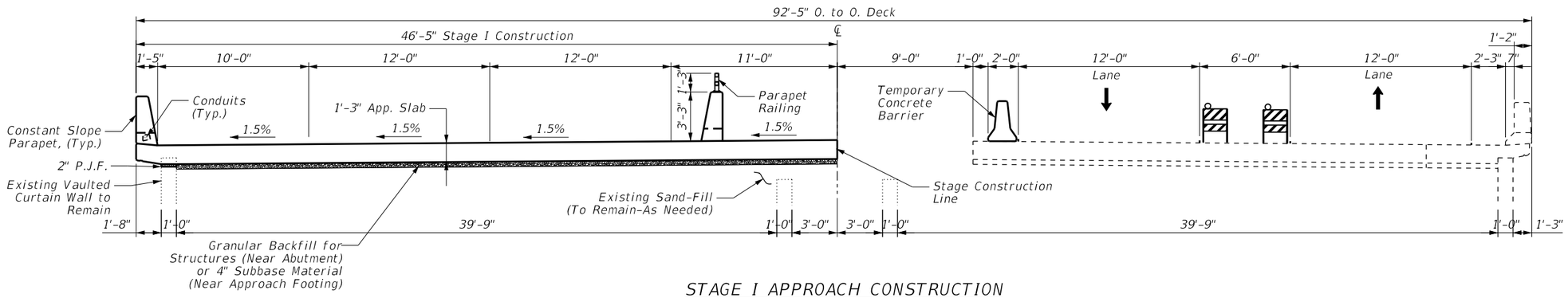

STAGE I APPROACH CONSTRUCTION

(Looking East)

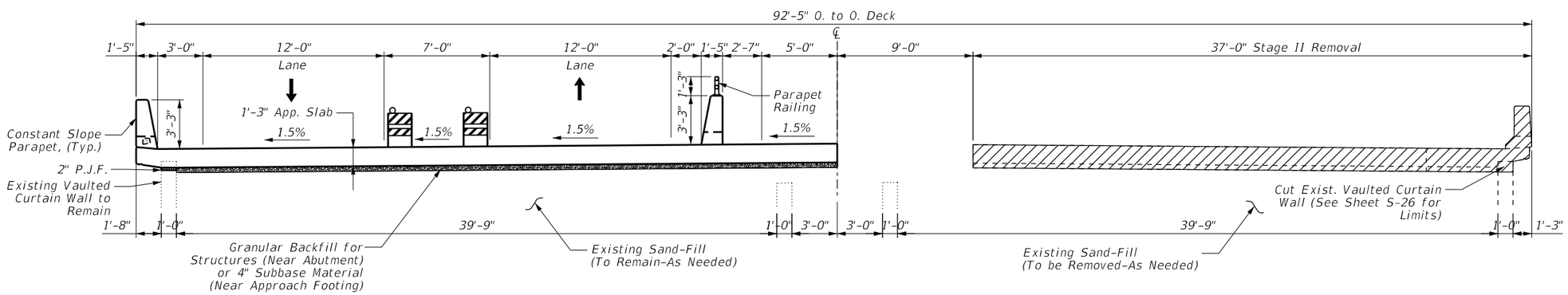

STAGE II APPROACH REMOVAL

(Looking East)

MODEL: Default
FILE NAME: N:\IDOT\220628\CAD_Sheets\Structures\05-220628-Stage Construction_03.sht

CHRISTOPHER B. BURKE ENGINEERING, LTD.
9575 W. Higgins Road, Suite 600
Rosemont, Illinois 60018
(847) 823-0500

USER NAME = jjeziemy	DESIGNED - MM	REVISED -	STATE OF ILLINOIS DEPARTMENT OF TRANSPORTATION
	DRAWN - PDR	REVISED -	
	CHECKED - CF	REVISED -	
PLOT DATE = 3/21/2025	DATE -	REVISED -	

STAGE CONSTRUCTION (3 OF 4)
STRUCTURE NO. 071-0058

SCALE: | SHEET S-5 OF S-29 SHEETS | STA. | TO STA.

F.A.* RTE.	SECTION	COUNTY	TOTAL SHEETS	SHEET NO.
*	141-1HBR-3 & (9,10) R-3	OGLE	508	310

CONTRACT NO. 64N98

ILLINOIS | FED. AID PROJECT

*FAI ROUTE 39 (I-39) & FAP 567 (IL 38)

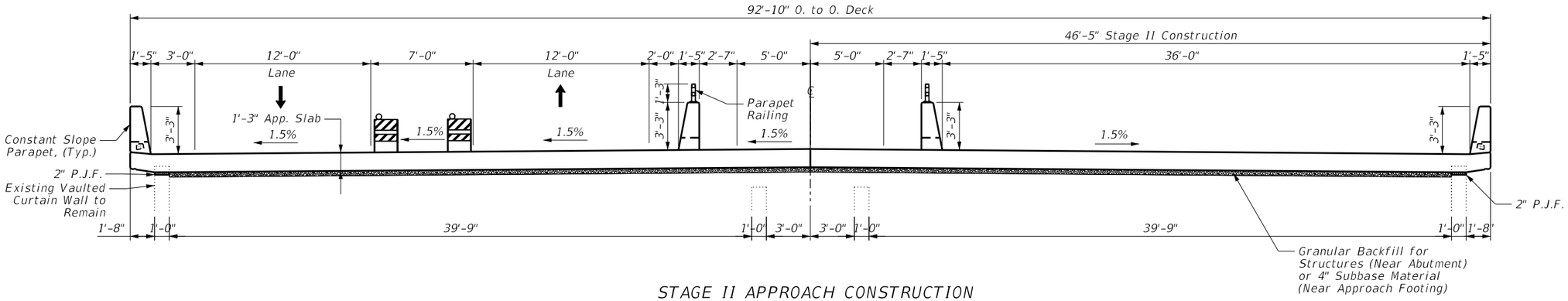

STAGE II APPROACH CONSTRUCTION

(Looking East)

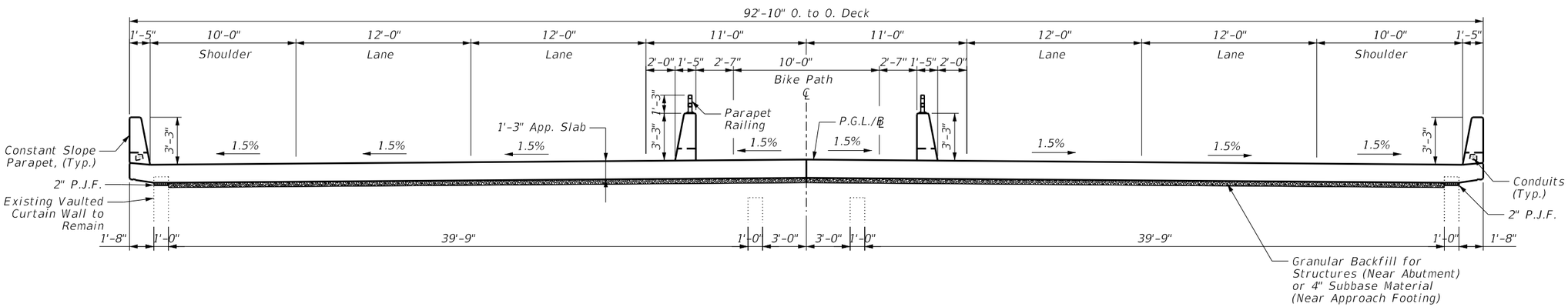

FINAL TYPICAL APPROACH SECTION

(Looking East)

MODEL: Default
FILE NAME: N:\IDOT\220628\CAD_Sheets\Structures\06-220628-Stage Construction_04.sht

CHRISTOPHER B. BURKE ENGINEERING, LTD. 9575 W. Higgins Road, Suite 600 Rosemont, Illinois 60018 (847) 823-0500	USER NAME = jjeziemy	DESIGNED - MM	REVISED -	STATE OF ILLINOIS DEPARTMENT OF TRANSPORTATION	STAGE CONSTRUCTION (4 OF 4) STRUCTURE NO. 071-0058	F.A.* RTE.	SECTION	COUNTY	TOTAL SHEETS	SHEET NO.
		DRAWN - PDR	REVISED -			*	141-1HBR-3 & (9,10) R-3	OGLE	508	311
		CHECKED - CF	REVISED -					CONTRACT NO. 64N98		
	PLOT DATE = 3/21/2025	DATE -	REVISED -		SCALE: SHEET S-6 OF S-29 SHEETS STA. TO STA.		ILLINOIS	FED. AID PROJECT		

*FAI ROUTE 39 (I-39) & FAP 567 (IL 38)

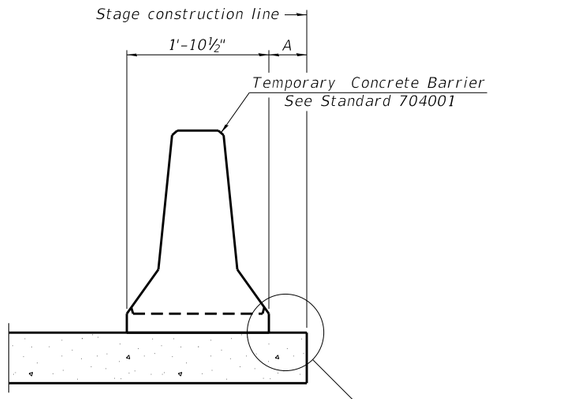

When "A" is 3'-1" or less, the temporary concrete barrier shall be restrained to the new slab according to Detail I, II or III. No restraint is required when "A" is greater than 3'-1".

NEW SLAB OR NEW DECK BEAM

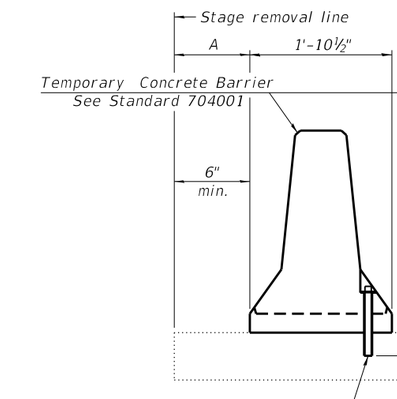

Drill 3-1¼" Ø Holes in existing slab for 1" Ø restraining pins. Traffic side only. Cost of restraining pins are included with Temporary Concrete Barrier. No restraint is required when "A" is greater than 3'-1".

EXISTING SLAB

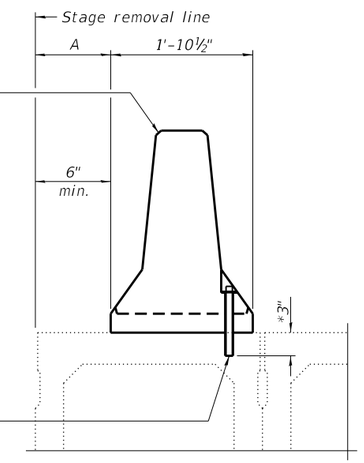

* When hot-mix asphalt wearing surface is present, embedment shall be 3" plus the wearing surface depth.

EXISTING DECK BEAM

SECTIONS THRU SLAB OR DECK BEAM

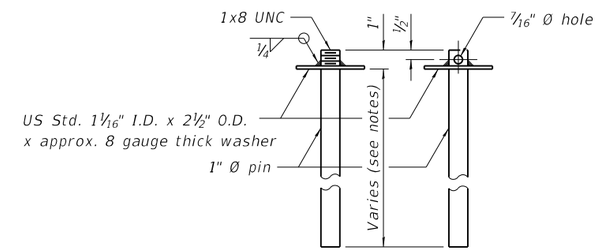

RESTRAINING PIN

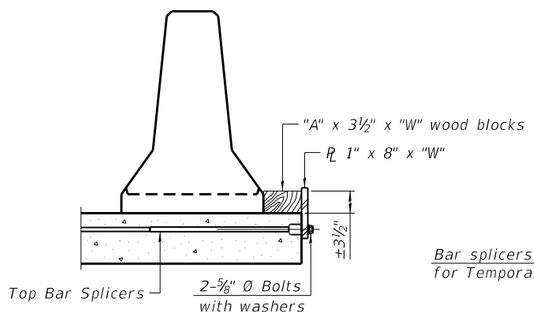

DETAIL I

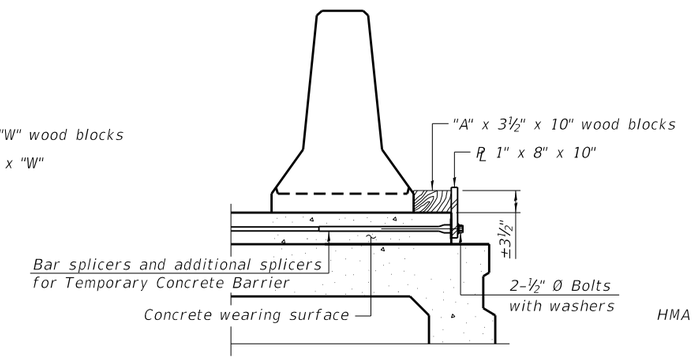

DETAIL II

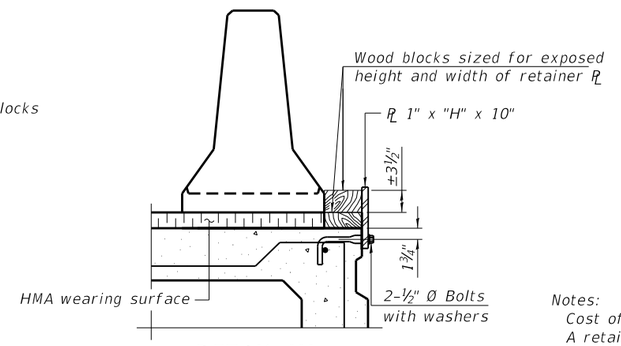

DETAIL III

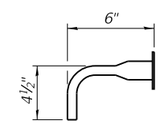

BAR SPLICER FOR #4 BAR - DETAIL III

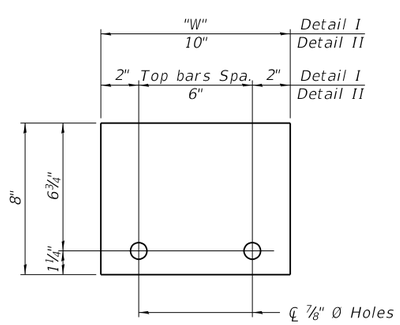

STEEL RETAINER PL 1" x 8" x "W"

(Detail I and II)

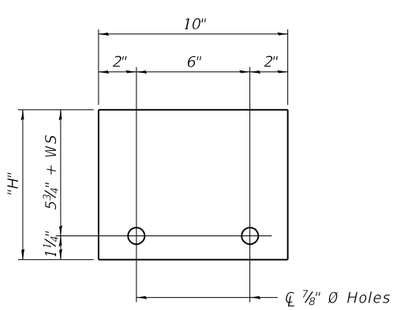

STEEL RETAINER PL 1" x "H" x 10"

(Detail III)

Notes:

Cost of retainer assembly is included with Temporary Concrete Barrier.

A retainer assembly shall be located at the approximate ℄ of each temporary concrete barrier.

The retainer plate shall not be removed until the concrete on the adjacent stage is ready to be poured. For Detail III applications the retainer plate shall not be removed until just prior to placing the adjacent beam.

When the 'A' dimension is less than 1½", the wood block shall be omitted and the barrier shall be placed in direct contact with the steel retainer plate. For deck beam applications the minimum required 'A' distance is 6" to accommodate the shear key clamping device.

Detail I - Installation for a new bridge deck or bridge slab.

Detail II - Installation for a new deck beam with an initial concrete wearing surface. Additional bar splicers shall be provided at 6'-0" centers and paired with the bar splicers of the concrete wearing surface reinforcement to accommodate the installation of the retainer assemblies. The cost of the additional bar splicers is included with the concrete wearing surface.

Detail III - Installation for a new deck beam with no initial wearing surface or with an initial hot-mix asphalt (HMA) wearing surface present. The deck beam directly beneath the temporary concrete barrier shall be fabricated with bar splicer inserts in the side of the beam, as detailed, to accommodate the installation of the retainer assemblies. A pair of bar splicers, 6" apart, shall be placed at 6'-0" centers along the length of the beam. The cost of the bar splicers is included with the deck beam.

RAILING CRITERIA

NCHRP 350 Test Level	3
Railing Weight (plf)	440

R-27 5-15-2023

MODEL: Default
FILE NAME: N:\DOT\220\628\CAD_Sheets\Structures\07-220628-Temp Concrete Barrier.sht

CHRISTOPHER B. BURKE ENGINEERING, LTD.
9575 W. Higgins Road, Suite 600
Rosemont, Illinois 60018
(847) 823-0500

USER NAME = jjeziemy	DESIGNED - MM	REVISED -	
	DRAWN - PDR	REVISED -	
	CHECKED - CF	REVISED -	
PLOT DATE = 3/21/2025	DATE -	REVISED -	

STATE OF ILLINOIS
DEPARTMENT OF TRANSPORTATION

TEMPORARY CONCRETE BARRIER
STRUCTURE NO. 071-0058

SCALE: SHEET S-7 OF S-29 SHEETS STA. TO STA.

F.A.* RTE.	SECTION	COUNTY	TOTAL SHEETS	SHEET NO.
*	141-1HBR-3 & (9,10) R-3	OGLE	508	312
		CONTRACT NO. 64N98		
	ILLINOIS	FED. AID PROJECT		

*FAI ROUTE 39 (I-39) & FAP 567 (IL 38)

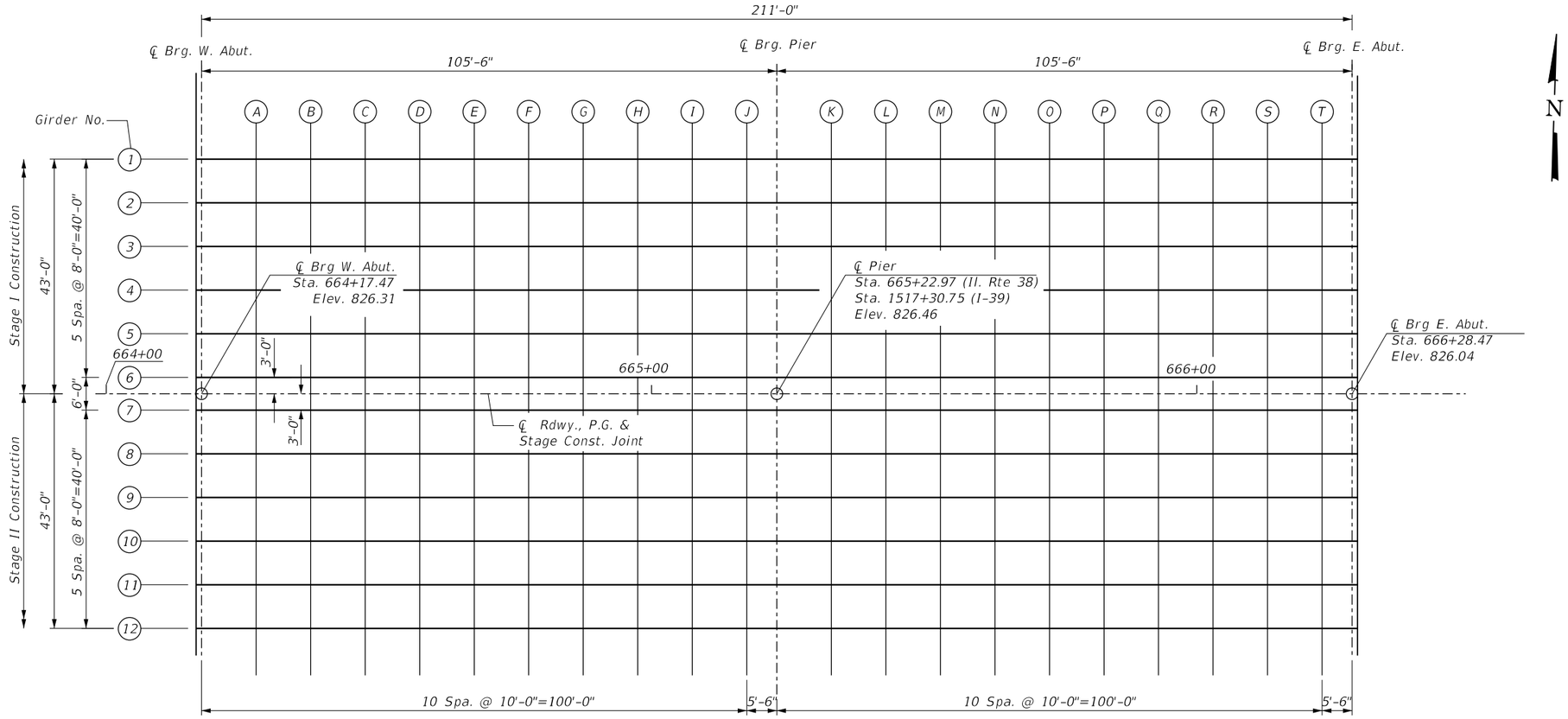

PLAN

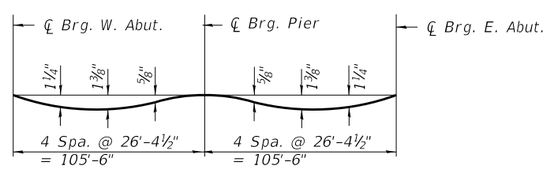

DEAD LOAD DEFLECTION DIAGRAM

(Includes weight of concrete only.)

Note:
The above deflections are not to be used in the field if the engineer is working from the grade elevations adjusted for dead load deflections as shown on Sheets S-9 thru S-11 of S-29.

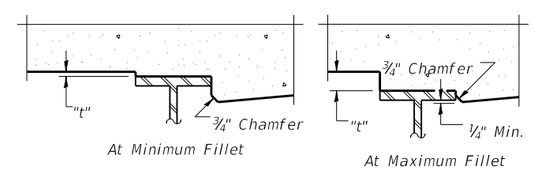

FILLET HEIGHTS

To determine "t": After all structural steel has been erected, elevations of the top flanges of the beams shall be taken at intervals shown above. These elevations subtracted from the "Theoretical Grade Elevations Adjusted for Dead Load Deflection" shown S-9 thru S-11 of S-29, minus slab thickness, equals the fillet heights "t" above top flange of beams.

MODEL: Default
FILE NAME: N:\IDOT\220628\CAD_Sheets\Structures\08-220628-Top of Deck_01.sht

CHRISTOPHER B. BURKE ENGINEERING, LTD. 9575 W. Higgins Road, Suite 600 Rosemont, Illinois 60018 (847) 823-0500	USER NAME = jjeziemy	DESIGNED - MM	REVISED -	STATE OF ILLINOIS DEPARTMENT OF TRANSPORTATION	TOP OF DECK ELEVATIONS (1 OF 4) STRUCTURE NO. 071-0058
		DRAWN - PDR	REVISED -		
		CHECKED - CF	REVISED -		
	PLOT DATE = 3/21/2025	DATE -	REVISED -		SCALE: SHEET S-8 OF S-29 SHEETS STA. TO STA.

F.A.* RTE.	SECTION	COUNTY	TOTAL SHEETS	SHEET NO.
*	141-1HBR-3 & (9,10) R-3	OGLE	508	313
		CONTRACT NO. 64N98		
	ILLINOIS	FED. AID PROJECT		

*FAI ROUTE 39 (I-39) & FAP 567 (IL 38)

BEAM 1

Location	Station	Offset	Theoretical Grade Elevations	Theoretical Grade Elevations Adjusted For Dead Load Deflection
Bk. W. Abutment	664+16.47	-43.00'	825.67	825.67
℄ Brg W. Abut.	664+17.47	-43.00'	825.67	825.67
A	664+27.47	-43.00'	825.71	825.76
B	664+37.47	-43.00'	825.74	825.83
C	664+47.47	-43.00'	825.77	825.88
D	664+57.47	-43.00'	825.79	825.92
E	664+67.47	-43.00'	825.81	825.93
F	664+77.47	-43.00'	825.83	825.93
G	664+87.47	-43.00'	825.83	825.91
H	664+97.47	-43.00'	825.84	825.88
I	665+07.47	-43.00'	825.83	825.85
J	665+17.47	-43.00'	825.83	825.83
℄ Brg Pier	665+22.97	-43.00'	825.82	825.82
K	665+32.97	-43.00'	825.80	825.81
L	665+42.97	-43.00'	825.78	825.81
M	665+52.97	-43.00'	825.76	825.82
N	665+62.97	-43.00'	825.73	825.81
O	665+72.97	-43.00'	825.69	825.80
P	665+82.97	-43.00'	825.65	825.77
Q	665+92.97	-43.00'	825.60	825.72
R	666+02.97	-43.00'	825.55	825.65
S	666+12.97	-43.00'	825.49	825.56
T	666+22.97	-43.00'	825.43	825.46
℄ Brg E. Abut.	666+28.47	-43.00'	825.40	825.40
Bk. E. Abutment	666+29.47	-43.00'	825.39	825.39

BEAM 2

Location	Station	Offset	Theoretical Grade Elevations	Theoretical Grade Elevations Adjusted For Dead Load Deflection
Bk. W. Abutment	664+16.47	-35.00'	825.79	825.79
℄ Brg W. Abut.	664+17.47	-35.00'	825.79	825.79
A	664+27.47	-35.00'	825.83	825.88
B	664+37.47	-35.00'	825.86	825.95
C	664+47.47	-35.00'	825.89	826.00
D	664+57.47	-35.00'	825.91	826.04
E	664+67.47	-35.00'	825.93	826.05
F	664+77.47	-35.00'	825.95	826.05
G	664+87.47	-35.00'	825.95	826.03
H	664+97.47	-35.00'	825.96	826.00
I	665+07.47	-35.00'	825.95	825.97
J	665+17.47	-35.00'	825.95	825.95
℄ Brg Pier	665+22.97	-35.00'	825.94	825.94
K	665+32.97	-35.00'	825.92	825.93
L	665+42.97	-35.00'	825.90	825.93
M	665+52.97	-35.00'	825.88	825.94
N	665+62.97	-35.00'	825.85	825.93
O	665+72.97	-35.00'	825.81	825.92
P	665+82.97	-35.00'	825.77	825.89
Q	665+92.97	-35.00'	825.72	825.84
R	666+02.97	-35.00'	825.67	825.77
S	666+12.97	-35.00'	825.61	825.68
T	666+22.97	-35.00'	825.55	825.58
℄ Brg E. Abut.	666+28.47	-35.00'	825.52	825.52
Bk. E. Abutment	666+29.47	-35.00'	825.51	825.51

BEAM 3

Location	Station	Offset	Theoretical Grade Elevations	Theoretical Grade Elevations Adjusted For Dead Load Deflection
Bk. W. Abutment	664+16.47	-27.00'	825.91	825.91
℄ Brg W. Abut.	664+17.47	-27.00'	825.91	825.91
A	664+27.47	-27.00'	825.95	826.00
B	664+37.47	-27.00'	825.98	826.07
C	664+47.47	-27.00'	826.01	826.12
D	664+57.47	-27.00'	826.03	826.16
E	664+67.47	-27.00'	826.05	826.17
F	664+77.47	-27.00'	826.07	826.17
G	664+87.47	-27.00'	826.07	826.15
H	664+97.47	-27.00'	826.08	826.12
I	665+07.47	-27.00'	826.07	826.09
J	665+17.47	-27.00'	826.07	826.07
℄ Brg Pier	665+22.97	-27.00'	826.06	826.06
K	665+32.97	-27.00'	826.04	826.05
L	665+42.97	-27.00'	826.02	826.05
M	665+52.97	-27.00'	826.00	826.06
N	665+62.97	-27.00'	825.97	826.05
O	665+72.97	-27.00'	825.93	826.04
P	665+82.97	-27.00'	825.89	826.01
Q	665+92.97	-27.00'	825.84	825.96
R	666+02.97	-27.00'	825.79	825.89
S	666+12.97	-27.00'	825.73	825.80
T	666+22.97	-27.00'	825.67	825.70
℄ Brg E. Abut.	666+28.47	-27.00'	825.64	825.64
Bk. E. Abutment	666+29.47	-27.00'	825.63	825.63

BEAM 4

Location	Station	Offset	Theoretical Grade Elevations	Theoretical Grade Elevations Adjusted For Dead Load Deflection
Bk. W. Abutment	664+16.47	-19.00'	826.03	826.03
℄ Brg W. Abut.	664+17.47	-19.00'	826.03	826.03
A	664+27.47	-19.00'	826.07	826.12
B	664+37.47	-19.00'	826.10	826.19
C	664+47.47	-19.00'	826.13	826.24
D	664+57.47	-19.00'	826.15	826.28
E	664+67.47	-19.00'	826.17	826.29
F	664+77.47	-19.00'	826.19	826.29
G	664+87.47	-19.00'	826.19	826.27
H	664+97.47	-19.00'	826.20	826.24
I	665+07.47	-19.00'	826.19	826.21
J	665+17.47	-19.00'	826.19	826.19
℄ Brg Pier	665+22.97	-19.00'	826.18	826.18
K	665+32.97	-19.00'	826.16	826.17
L	665+42.97	-19.00'	826.14	826.17
M	665+52.97	-19.00'	826.12	826.18
N	665+62.97	-19.00'	826.09	826.17
O	665+72.97	-19.00'	826.05	826.16
P	665+82.97	-19.00'	826.01	826.13
Q	665+92.97	-19.00'	825.96	826.08
R	666+02.97	-19.00'	825.91	826.01
S	666+12.97	-19.00'	825.85	825.92
T	666+22.97	-19.00'	825.79	825.82
℄ Brg E. Abut.	666+28.47	-19.00'	825.76	825.76
Bk. E. Abutment	666+29.47	-19.00'	825.75	825.75

BEAM 5

Location	Station	Offset	Theoretical Grade Elevations	Theoretical Grade Elevations Adjusted For Dead Load Deflection
Bk. W. Abutment	664+16.47	-11.00'	826.15	826.15
℄ Brg W. Abut.	664+17.47	-11.00'	826.15	826.15
A	664+27.47	-11.00'	826.19	826.24
B	664+37.47	-11.00'	826.22	826.31
C	664+47.47	-11.00'	826.25	826.36
D	664+57.47	-11.00'	826.27	826.40
E	664+67.47	-11.00'	826.29	826.41
F	664+77.47	-11.00'	826.31	826.41
G	664+87.47	-11.00'	826.31	826.39
H	664+97.47	-11.00'	826.32	826.36
I	665+07.47	-11.00'	826.31	826.33
J	665+17.47	-11.00'	826.31	826.31
℄ Brg Pier	665+22.97	-11.00'	826.30	826.30
K	665+32.97	-11.00'	826.28	826.29
L	665+42.97	-11.00'	826.26	826.29
M	665+52.97	-11.00'	826.24	826.30
N	665+62.97	-11.00'	826.21	826.29
O	665+72.97	-11.00'	826.17	826.28
P	665+82.97	-11.00'	826.13	826.25
Q	665+92.97	-11.00'	826.08	826.20
R	666+02.97	-11.00'	826.03	826.13
S	666+12.97	-11.00'	825.97	826.04
T	666+22.97	-11.00'	825.91	825.94
℄ Brg E. Abut.	666+28.47	-11.00'	825.88	825.88
Bk. E. Abutment	666+29.47	-11.00'	825.87	825.87

BEAM 6

Location	Station	Offset	Theoretical Grade Elevations	Theoretical Grade Elevations Adjusted For Dead Load Deflection
Bk. W. Abutment	664+16.47	-3.00'	826.27	826.27
℄ Brg W. Abut.	664+17.47	-3.00'	826.27	826.27
A	664+27.47	-3.00'	826.31	826.36
B	664+37.47	-3.00'	826.34	826.43
C	664+47.47	-3.00'	826.37	826.48
D	664+57.47	-3.00'	826.39	826.52
E	664+67.47	-3.00'	826.41	826.53
F	664+77.47	-3.00'	826.43	826.53
G	664+87.47	-3.00'	826.43	826.51
H	664+97.47	-3.00'	826.44	826.48
I	665+07.47	-3.00'	826.43	826.45
J	665+17.47	-3.00'	826.43	826.43
℄ Brg Pier	665+22.97	-3.00'	826.42	826.42
K	665+32.97	-3.00'	826.40	826.41
L	665+42.97	-3.00'	826.38	826.41
M	665+52.97	-3.00'	826.36	826.42
N	665+62.97	-3.00'	826.33	826.41
O	665+72.97	-3.00'	826.29	826.40
P	665+82.97	-3.00'	826.25	826.37
Q	665+92.97	-3.00'	826.20	826.32
R	666+02.97	-3.00'	826.15	826.25
S	666+12.97	-3.00'	826.09	826.16
T	666+22.97	-3.00'	826.03	826.06
℄ Brg E. Abut.	666+28.47	-3.00'	826.00	826.00
Bk. E. Abutment	666+29.47	-3.00'	825.99	825.99

℄ RDWY., P.G. & STAGE CONST. JOINT

Location	Station	Offset	Theoretical Grade Elevations	Theoretical Grade Elevations Adjusted For Dead Load Deflection
Bk. W. Abutment	664+16.47	0.00	826.31	826.31
℄ Brg W. Abut.	664+17.47	0.00	826.31	826.31
A	664+27.47	0.00	826.35	826.40
B	664+37.47	0.00	826.39	826.47
C	664+47.47	0.00	826.42	826.53
D	664+57.47	0.00	826.44	826.56
E	664+67.47	0.00	826.46	826.58
F	664+77.47	0.00	826.47	826.57
G	664+87.47	0.00	826.48	826.55
H	664+97.47	0.00	826.48	826.53
I	665+07.47	0.00	826.48	826.50
J	665+17.47	0.00	826.47	826.48
℄ Brg. Pier	665+22.97	0.00	826.46	826.46
K	665+32.97	0.00	826.45	826.46
L	665+42.97	0.00	826.43	826.46
M	665+52.97	0.00	826.40	826.46
N	665+62.97	0.00	826.37	826.46
O	665+72.97	0.00	826.34	826.45
P	665+82.97	0.00	826.29	826.42
Q	665+92.97	0.00	826.25	826.37
R	666+02.97	0.00	826.20	826.30
S	666+12.97	0.00	826.14	826.21
T	666+22.97	0.00	826.08	826.10
℄ Brg E. Abut.	666+28.47	0.00	826.04	826.04
Bk. E. Abutment	666+29.47	0.00	826.03	826.03

BEAM 7

Location	Station	Offset	Theoretical Grade Elevations	Theoretical Grade Elevations Adjusted For Dead Load Deflection
Bk. W. Abutment	664+16.47	+3.00'	826.27	826.27
℄ Brg W. Abut.	664+17.47	+3.00'	826.27	826.27
A	664+27.47	+3.00'	826.31	826.36
B	664+37.47	+3.00'	826.34	826.43
C	664+47.47	+3.00'	826.37	826.48
D	664+57.47	+3.00'	826.39	826.52
E	664+67.47	+3.00'	826.41	826.53
F	664+77.47	+3.00'	826.43	826.53
G	664+87.47	+3.00'	826.43	826.51
H	664+97.47	+3.00'	826.44	826.48
I	665+07.47	+3.00'	826.43	826.45
J	665+17.47	+3.00'	826.43	826.43
℄ Brg. Pier	665+22.97	+3.00'	826.42	826.42
K	665+32.97	+3.00'	826.40	826.41
L	665+42.97	+3.00'	826.38	826.41
M	665+52.97	+3.00'	826.36	826.42
N	665+62.97	+3.00'	826.33	826.41
O	665+72.97	+3.00'	826.29	826.40
P	665+82.97	+3.00'	826.25	826.37
Q	665+92.97	+3.00'	826.20	826.32
R	666+02.97	+3.00'	826.15	826.25
S	666+12.97	+3.00'	826.09	826.16
T	666+22.97	+3.00'	826.03	826.06
℄ Brg E. Abut.	666+28.47	+3.00'	826.00	826.00
Bk. E. Abutment	666+29.47	+3.00'	825.99	825.99

BEAM 8

Location	Station	Offset	Theoretical Grade Elevations	Theoretical Grade Elevations Adjusted For Dead Load Deflection
Bk. W. Abutment	664+16.47	+11.00'	826.15	826.15
℄ Brg W. Abut.	664+17.47	+11.00'	826.15	826.15
A	664+27.47	+11.00'	826.19	826.24
B	664+37.47	+11.00'	826.22	826.31
C	664+47.47	+11.00'	826.25	826.36
D	664+57.47	+11.00'	826.27	826.40
E	664+67.47	+11.00'	826.29	826.41
F	664+77.47	+11.00'	826.31	826.41
G	664+87.47	+11.00'	826.31	826.39
H	664+97.47	+11.00'	826.32	826.36
I	665+07.47	+11.00'	826.31	826.33
J	665+17.47	+11.00'	826.31	826.31
℄ Brg. Pier	665+22.97	+11.00'	826.30	826.30
K	665+32.97	+11.00'	826.28	826.29
L	665+42.97	+11.00'	826.26	826.29
M	665+52.97	+11.00'	826.24	826.30
N	665+62.97	+11.00'	826.21	826.29
O	665+72.97	+11.00'	826.17	826.28
P	665+82.97	+11.00'	826.13	826.25
Q	665+92.97	+11.00'	826.08	826.20
R	666+02.97	+11.00'	826.03	826.13
S	666+12.97	+11.00'	825.97	826.04
T	666+22.97	+11.00'	825.91	825.94
℄ Brg E. Abut.	666+28.47	+11.00'	825.88	825.88
Bk. E. Abutment	666+29.47	+11.00'	825.87	825.87

BEAM 9

Location	Station	Offset	Theoretical Grade Elevations	Theoretical Grade Elevations Adjusted For Dead Load Deflection
Bk. W. Abutment	664+16.47	+19.00'	826.03	826.03
℄ Brg W. Abut.	664+17.47	+19.00'	826.03	826.03
A	664+27.47	+19.00'	826.07	826.12
B	664+37.47	+19.00'	826.10	826.19
C	664+47.47	+19.00'	826.13	826.24
D	664+57.47	+19.00'	826.15	826.28
E	664+67.47	+19.00'	826.17	826.29
F	664+77.47	+19.00'	826.19	826.29
G	664+87.47	+19.00'	826.19	826.27
H	664+97.47	+19.00'	826.20	826.24
I	665+07.47	+19.00'	826.19	826.21
J	665+17.47	+19.00'	826.19	826.19
℄ Brg. Pier	665+22.97	+19.00'	826.18	826.18
K	665+32.97	+19.00'	826.16	826.17
L	665+42.97	+19.00'	826.14	826.17
M	665+52.97	+19.00'	826.12	826.18
N	665+62.97	+19.00'	826.09	826.17
O	665+72.97	+19.00'	826.05	826.16
P	665+82.97	+19.00'	826.01	826.13
Q	665+92.97	+19.00'	825.96	826.08
R	666+02.97	+19.00'	825.91	826.01
S	666+12.97	+19.00'	825.85	825.92
T	666+22.97	+19.00'	825.79	825.82
℄ Brg E. Abut.	666+28.47	+19.00'	825.76	825.76
Bk. E. Abutment	666+29.47	+19.00'	825.75	825.75

BEAM 10

Location	Station	Offset	Theoretical Grade Elevations	Theoretical Grade Elevations Adjusted For Dead Load Deflection
Bk. W. Abutment	664+16.47	+27.00'	825.91	825.91
℄ Brg W. Abut.	664+17.47	+27.00'	825.91	825.91
A	664+27.47	+27.00'	825.95	826.00
B	664+37.47	+27.00'	825.98	826.07
C	664+47.47	+27.00'	826.01	826.12
D	664+57.47	+27.00'	826.03	826.16
E	664+67.47	+27.00'	826.05	826.17
F	664+77.47	+27.00'	826.07	826.17
G	664+87.47	+27.00'	826.07	826.15
H	664+97.47	+27.00'	826.08	826.12
I	665+07.47	+27.00'	826.07	826.09
J	665+17.47	+27.00'	826.07	826.07
℄ Brg. Pier	665+22.97	+27.00'	826.06	826.06
K	665+32.97	+27.00'	826.04	826.05
L	665+42.97	+27.00'	826.02	826.05
M	665+52.97	+27.00'	826.00	826.06
N	665+62.97	+27.00'	825.97	826.05
O	665+72.97	+27.00'	825.93	826.04
P	665+82.97	+27.00'	825.89	826.01
Q	665+92.97	+27.00'	825.84	825.96
R	666+02.97	+27.00'	825.79	825.89
S	666+12.97	+27.00'	825.73	825.80
T	666+22.97	+27.00'	825.67	825.70
℄ Brg E. Abut.	666+28.47	+27.00'	825.64	825.64
Bk. E. Abutment	666+29.47	+27.00'	825.63	825.63

BEAM 11

Location	Station	Offset	Theoretical Grade Elevations	Theoretical Grade Elevations Adjusted For Dead Load Deflection
Bk. W. Abutment	664+16.47	+35.00'	825.79	825.79
℄ Brg W. Abut.	664+17.47	+35.00'	825.79	825.79
A	664+27.47	+35.00'	825.83	825.88
B	664+37.47	+35.00'	825.86	825.95
C	664+47.47	+35.00'	825.89	826.00
D	664+57.47	+35.00'	825.91	826.04
E	664+67.47	+35.00'	825.93	826.05
F	664+77.47	+35.00'	825.95	826.05
G	664+87.47	+35.00'	825.95	826.03
H	664+97.47	+35.00'	825.96	826.00
I	665+07.47	+35.00'	825.95	825.97
J	665+17.47	+35.00'	825.95	825.95
℄ Brg. Pier	665+22.97	+35.00'	825.94	825.94
K	665+32.97	+35.00'	825.92	825.93
L	665+42.97	+35.00'	825.90	825.93
M	665+52.97	+35.00'	825.88	825.94
N	665+62.97	+35.00'	825.85	825.93
O	665+72.97	+35.00'	825.81	825.92
P	665+82.97	+35.00'	825.77	825.89
Q	665+92.97	+35.00'	825.72	825.84
R	666+02.97	+35.00'	825.67	825.77
S	666+12.97	+35.00'	825.61	825.68
T	666+22.97	+35.00'	825.55	825.58
℄ Brg E. Abut.	666+28.47	+35.00'	825.52	825.52
Bk. E. Abutment	666+29.47	+35.00'	825.51	825.51

MODEL: Default
FILE NAME: N:\IDOT\220628\CAD_Sheets\Structures\10-220628-Top of Deck_03.sht

CHRISTOPHER B. BURKE ENGINEERING, LTD.
9575 W. Higgins Road, Suite 600
Rosemont, Illinois 60018
(847) 823-0500

USER NAME = jjezierny	DESIGNED - MM	REVISED -	
	DRAWN - PDR	REVISED -	
	CHECKED - CF	REVISED -	
PLOT DATE = 3/21/2025	DATE -	REVISED -	

STATE OF ILLINOIS
DEPARTMENT OF TRANSPORTATION

TOP OF DECK ELEVATIONS (3 OF 4)
STRUCTURE NO. 071-0058

SCALE: SHEET S-10 OF S-29 SHEETS STA. TO STA.

F.A.* RTE.	SECTION	COUNTY	TOTAL SHEETS	SHEET NO.
*	141-1HBR-3 & (9,10) R-3	OGLE	508	315
		CONTRACT NO. 64N98		
	ILLINOIS	FED. AID PROJECT		

*FAI ROUTE 39 (I-39) & FAP 567 (IL 38)

BEAM 12

Location	Station	Offset	Theoretical Grade Elevations	Theoretical Grade Elevations Adjusted For Dead Load Deflection
Bk. W. Abutment	664+16.47	+43.00'	825.67	825.67
℄ rg W. Abut.	664+17.47	+43.00'	825.67	825.67
A	664+27.47	+43.00'	825.71	825.76
B	664+37.47	+43.00'	825.74	825.83
C	664+47.47	+43.00'	825.77	825.88
D	664+57.47	+43.00'	825.79	825.92
E	664+67.47	+43.00'	825.81	825.93
F	664+77.47	+43.00'	825.83	825.93
G	664+87.47	+43.00'	825.83	825.91
H	664+97.47	+43.00'	825.84	825.88
I	665+07.47	+43.00'	825.83	825.85
J	665+17.47	+43.00'	825.83	825.83
℄ Brg. Pier	665+22.97	+43.00'	825.82	825.82
K	665+32.97	+43.00'	825.80	825.81
L	665+42.97	+43.00'	825.78	825.81
M	665+52.97	+43.00'	825.76	825.82
N	665+62.97	+43.00'	825.73	825.81
O	665+72.97	+43.00'	825.69	825.80
P	665+82.97	+43.00'	825.65	825.77
Q	665+92.97	+43.00'	825.60	825.72
R	666+02.97	+43.00'	825.55	825.65
S	666+12.97	+43.00'	825.49	825.56
T	666+22.97	+43.00'	825.43	825.46
℄ Brg E. Abut.	666+28.47	+43.00'	825.40	825.40
Bk. E. Abutment	666+29.47	+43.00'	825.39	825.39

C/L ROADWAY, PROFILE GRADE, & STAGE CONST. JT.

Location	Station	Offset	Theoretical Grade Elevations
W. End West Appr. Pav't	663+86.47	0.00	826.16
A	663+96.47	0.00	826.22
B	664+06.47	0.00	826.27
E. End West Appr. Pav't	664+16.47	0.00	826.31

NORTH EDGE OF SHOULDER

Location	Station	Offset	Theoretical Grade Elevations
W. End West Appr. Pav't	663+86.47	-45.00'	825.49
A	663+96.47	-45.00'	825.54
B	664+06.487	-45.00'	825.59
E. End West Appr. Pav't	664+16.47	-45.00'	825.64

NORTH EDGE OF E.B. PAVEMENT

Location	Station	Offset	Theoretical Grade Elevations
W. End West Appr. Pav't	663+86.47	+11.00	826.00
A	663+96.47	+11.00	826.05
B	664+06.47	+11.00	826.10
E. End West Appr. Pav't	664+16.47	+11.00	826.15

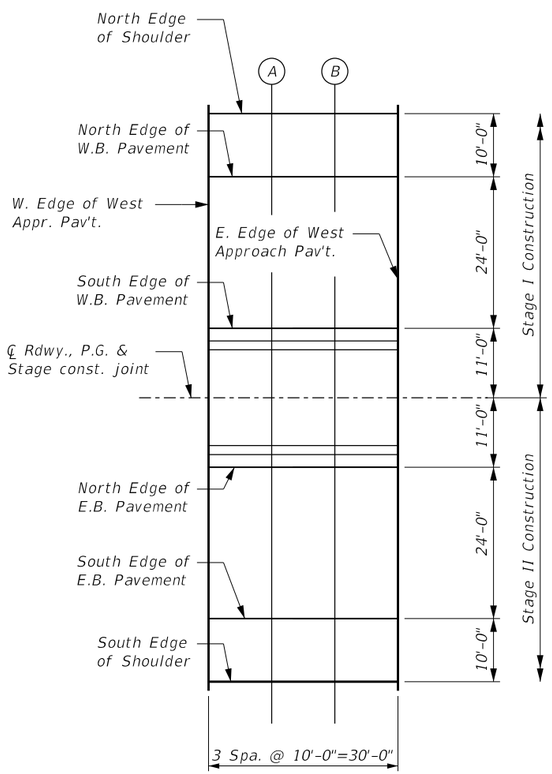

N

PLAN

West Approach

NORTH EDGE OF W.B. PAVEMENT

Location	Station	Offset	Theoretical Grade Elevations
W. End West Appr. Pav't	663+86.47	-35.00'	825.64
A	663+96.47	-35.00'	825.69
B	664+06.47	-35.00'	825.74
E. End West Appr. Pav't	664+16.47	-35.00'	825.79

SOUTH EDGE OF E.B. PAVEMENT

Location	Station	Offset	Theoretical Grade Elevations
W. End West Appr. Pav't	663+86.47	+35.00	825.64
A	663+96.47	+35.00	825.69
B	664+06.47	+35.00	825.74
E. End West Appr. Pav't	664+16.47	+35.00	825.79

SOUTH EDGE OF W.B. PAVEMENT

Location	Station	Offset	Theoretical Grade Elevations
W. End West Appr. Pav't	663+86.47	-11.00'	826.00
A	663+96.47	-11.00'	826.09
B	664+06.47	-11.00'	826.13
E. End West Appr. Pav't	664+16.47	-11.00'	826.15

SOUTH EDGE OF SHOULDER

Location	Station	Offset	Theoretical Grade Elevations
W. End West Appr. Pav't	663+86.47	+45.00	825.49
A	663+96.47	+45.00	825.54
B	664+06.47	+45.00	825.59
E. End West Appr. Pav't	664+16.47	+45.00	825.64

MODEL: Default
FILE NAME: N:\IDOT\220628\CAD_Sheets\Structures\12-220628-Top of Approach_01.sht

CHRISTOPHER B. BURKE ENGINEERING, LTD.
9575 W. Higgins Road, Suite 600
Rosemont, Illinois 60018
(847) 823-0500

USER NAME = jjezierny	DESIGNED - MM	REVISED -	
	DRAWN - PDR	REVISED -	
	CHECKED - CF	REVISED -	
PLOT DATE = 3/21/2025	DATE -	REVISED -	

STATE OF ILLINOIS
DEPARTMENT OF TRANSPORTATION

TOP OF WEST APPROACH ELEVATIONS
STRUCTURE NO. 071-0058

SCALE: | SHEET S-12 OF S-29 SHEETS | STA. | TO STA.

F.A.* RTE.	SECTION	COUNTY	TOTAL SHEETS	SHEET NO.
*	141-1HBR-3 & (9,10) R-3	OGLE	508	317
		CONTRACT NO. 64N98		
	ILLINOIS	FED. AID PROJECT		

*FAI ROUTE 39 (I-39) & FAP 567 (IL 38)

C/L ROADWAY, PROFILE GRADE, & STAGE CONST. JT.

Location	Station	Offset	Theoretical Grade Elevations
W. End East Appr. Pav't	666+29.47	0.00	826.03
C	666+39.47	0.00	825.96
D	666+49.47	0.00	825.89
E. End East Appr. Pav't	666+59.47	0.00	825.81

NORTH EDGE OF SHOULDER

Location	Station	Offset	Theoretical Grade Elevations
W. End East Appr. Pav't	666+29.47	-45.00'	825.36
C	666+39.47	-45.00'	825.29
D	666+49.47	-45.00'	825.21
E. End East Appr. Pav't	666+59.47	-45.00'	825.13

NORTH EDGE OF E.B. PAVEMENT

Location	Station	Offset	Theoretical Grade Elevations
W. End East Appr. Pav't	666+29.47	+11.00	825.87
C	666+39.47	+11.00	825.80
D	666+49.47	+11.00	825.72
E. End East Appr. Pav't	666+59.47	+11.00	825.64

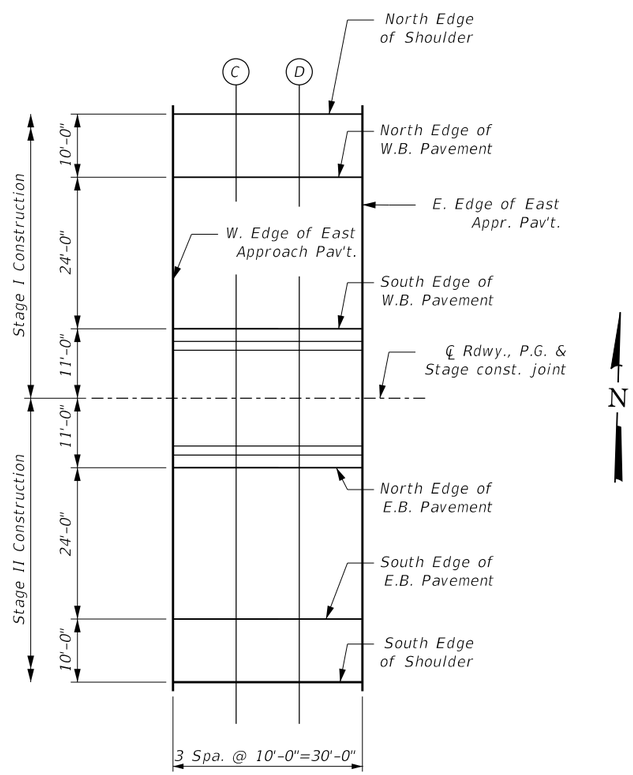

PLAN

East Approach

NORTH EDGE OF W.B. PAVEMENT

Location	Station	Offset	Theoretical Grade Elevations
W. End East Appr. Pav't	666+29.47	-35.00'	825.51
C	666+39.47	-35.00'	825.44
D	666+49.47	-35.00'	825.36
E. End East Appr. Pav't	666+59.47	-35.00'	825.28

SOUTH EDGE OF E.B. PAVEMENT

Location	Station	Offset	Theoretical Grade Elevations
W. End East Appr. Pav't	666+29.47	+35.00	825.51
C	666+39.47	+35.00	825.44
D	666+49.47	+35.00	825.36
E. End East Appr. Pav't	666+59.47	+35.00	825.28

SOUTH EDGE OF W.B. PAVEMENT

Location	Station	Offset	Theoretical Grade Elevations
W. End East Appr. Pav't	666+29.47	-11.00'	825.87
C	666+39.47	-11.00'	825.80
D	666+49.47	-11.00'	825.72
E. End East Appr. Pav't	666+59.47	-11.00'	825.64

SOUTH EDGE OF SHOULDER

Location	Station	Offset	Theoretical Grade Elevations
W. End East Appr. Pav't	666+29.47	+45.00	825.36
C	666+39.47	+45.00	825.29
D	666+49.47	+45.00	825.21
E. End East Appr. Pav't	666+59.47	+45.00	825.13

MODEL: Default
FILE NAME: N:\IDOT\220628\CAD_Sheets\Structures\13-220628-Top of Approach_02.sht

CHRISTOPHER B. BURKE ENGINEERING, LTD.
9575 W. Higgins Road, Suite 600
Rosemont, Illinois 60018
(847) 823-0500

USER NAME = jlezierny	DESIGNED - MM	REVISED -	
	DRAWN - PDR	REVISED -	
	CHECKED - CF	REVISED -	
PLOT DATE = 3/21/2025	DATE -	REVISED -	

STATE OF ILLINOIS
DEPARTMENT OF TRANSPORTATION

TOP OF EAST APPROACH ELEVATIONS
STRUCTURE NO. 071-0058

SCALE: | SHEET S-13 OF S-29 SHEETS | STA. | TO STA.

F.A.* RTE.	SECTION	COUNTY	TOTAL SHEETS	SHEET NO.
*	141-1HBR-3 & (9,10) R-3	OGLE	508	318
		CONTRACT NO. 64N98		
		ILLINOIS	FED. AID PROJECT	

*FAI ROUTE 39 (I-39) & FAP 567 (IL 38)

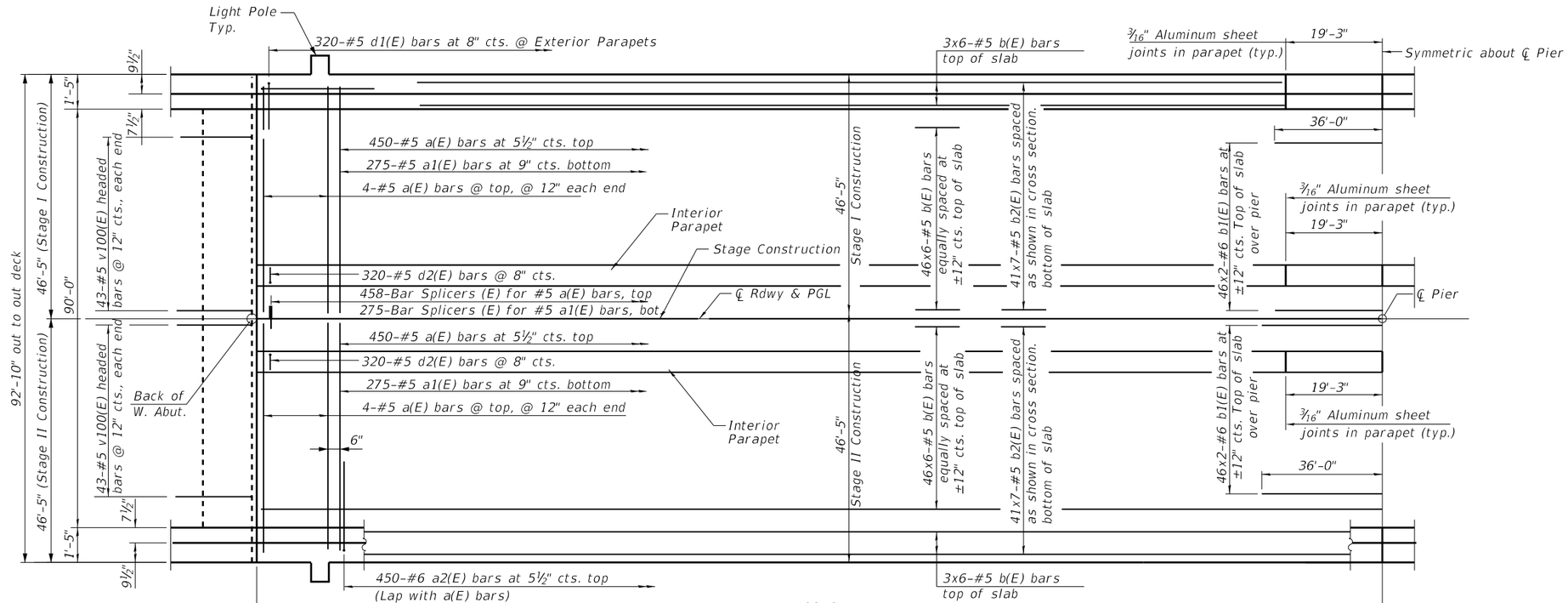

PARTIAL PLAN

Notes:
See sheet S-16 of S-29 for superstructure details and Bill of Material.
Bars indicated thus 20 x 3-#5 etc. indicates 20 lines of bars with 3 lengths per line.

MINIMUM BAR LAP
#5 bar = 3'-6"
#6 bar = 4'-9"

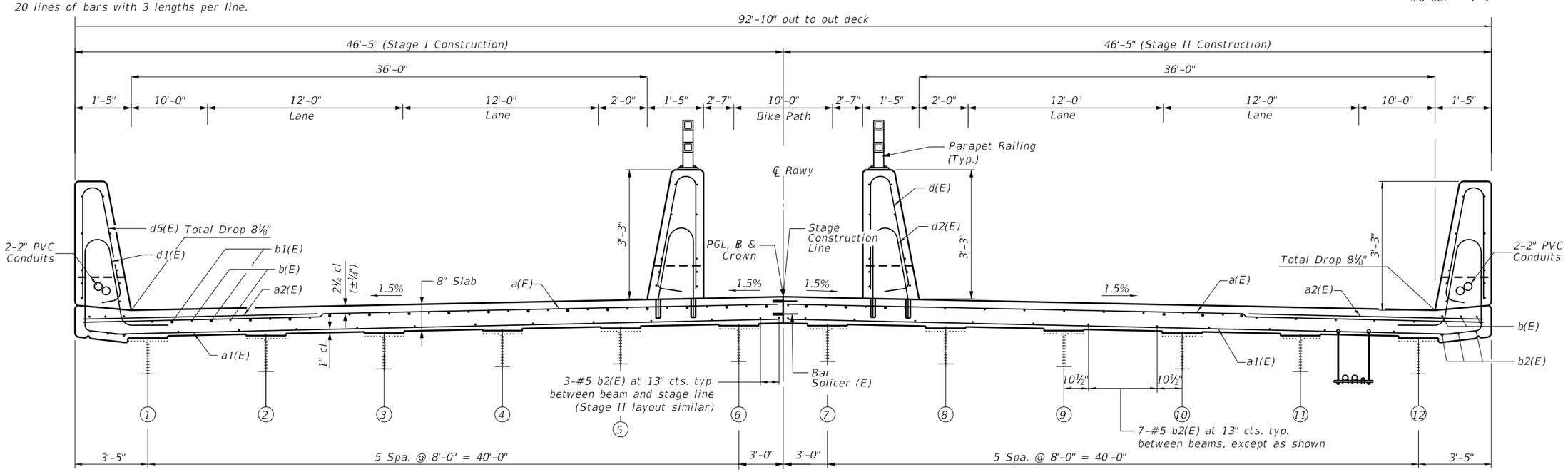

NEAR PIER

CROSS SECTION
(Looking East)

NEAR MIDSPAN

MODEL: Default
FILE NAME: N:\DOT\220628\CAD_Sheets\Structures\14-200628-Superstructure-01.sht

CHRISTOPHER B. BURKE ENGINEERING, LTD.
9575 W. Higgins Road, Suite 600
Rosemont, Illinois 60018
(847) 823-0500

USER NAME =]]eziemy	DESIGNED - MM	REVISED -	
	DRAWN - PDR	REVISED -	
	CHECKED - CF	REVISED -	
PLOT DATE = 3/21/2025	DATE -	REVISED -	

STATE OF ILLINOIS
DEPARTMENT OF TRANSPORTATION

SUPERSTRUCTURE PLAN & CROSS SECTION
STRUCTURE NO. 071-0058

SCALE: | SHEET S-14 OF S-29 SHEETS | STA. | TO STA.

F.A.* RTE.	SECTION	COUNTY	TOTAL SHEETS	SHEET NO.
*	141-1HBR-3 & (9,10) R-3	OGLE	508	319
		CONTRACT NO. 64N98		
	ILLINOIS	FED. AID PROJECT		

*FAI ROUTE 39 (I-39) & FAP 567 (IL 38)

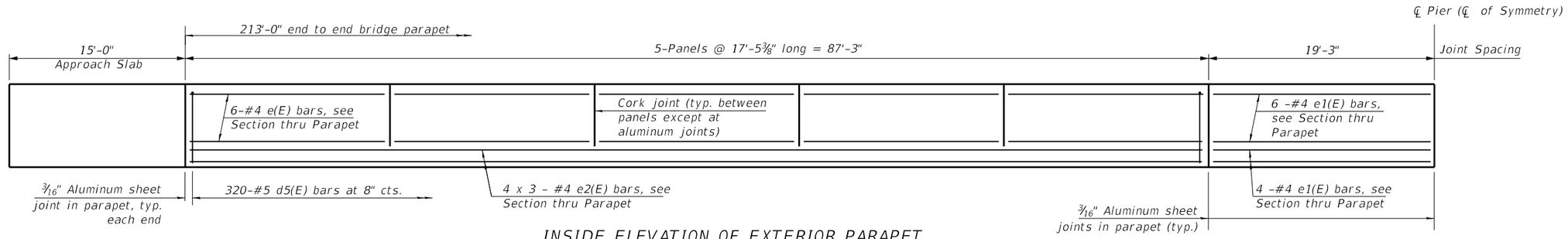

Note: See Sheet S-19 for Approach Parapet Details

INSIDE ELEVATION OF EXTERIOR PARAPET

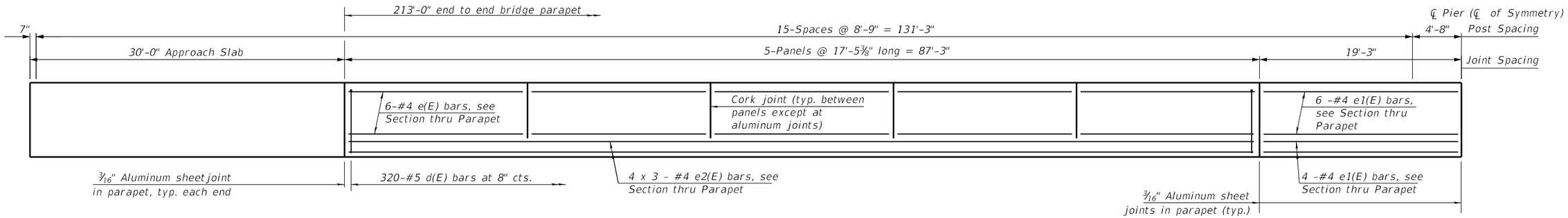

INSIDE ELEVATION OF INTERIOR PARAPET

MINIMUM BAR LAP

#4 bar = 2'-5"

Note: Drill and set #5 d2(E) bar according to Article 509.06 of the Standard Specifications. Drilled holes shall be roughened or scored per manufaccturer's recommendations. Maximum hole depth shall not exceed 6". Contractor shall take all necessary precautions to prevent drilled hole interference with deck reinforcement bars. Locate longitudinal bars to miss drilled locations. Located drilled holes to miss traverse bars in deck. Cost included with "Reinforcement Bars, Epoxy Coated".

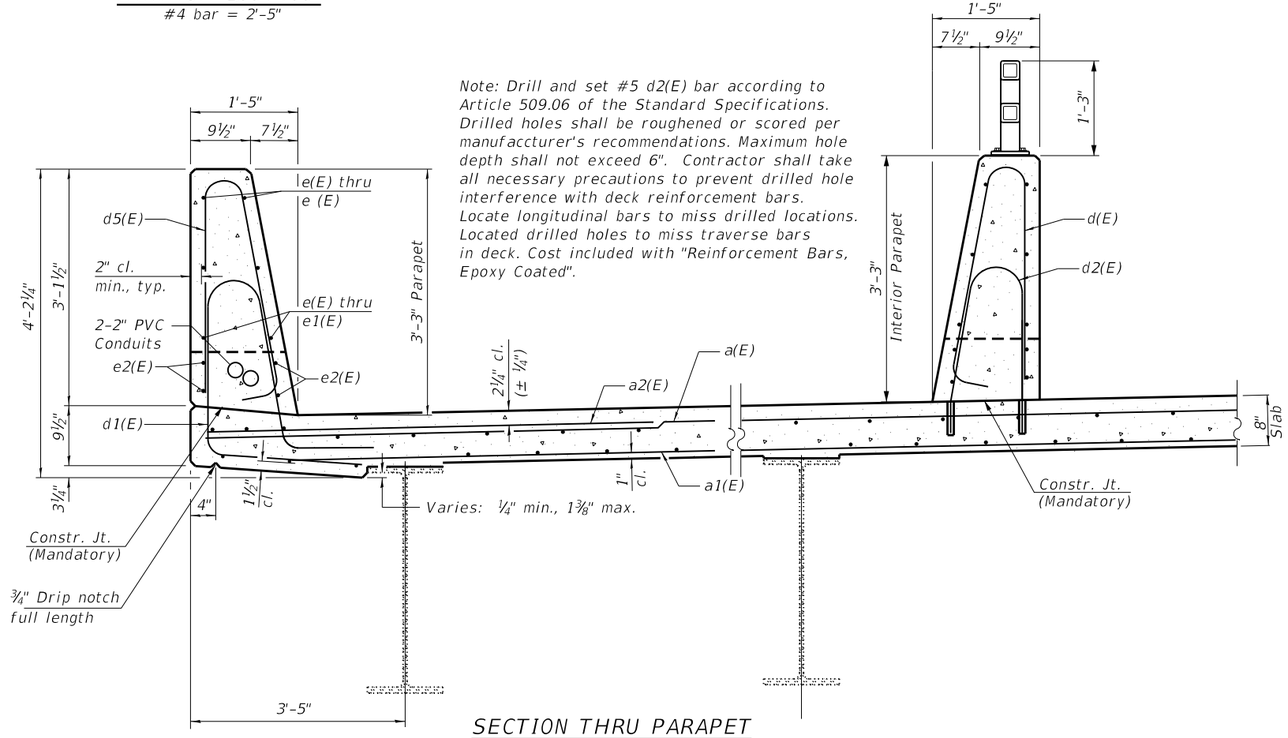

SECTION THRU PARAPET

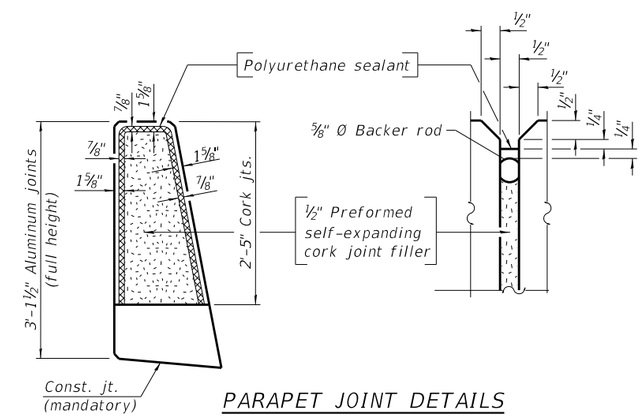

PARAPET JOINT DETAILS

Notes:

The 3/16" min. aluminum sheet shall be ASTM B 209 alloy 3003-H14 and coated with 5 mils of either bitumen paint or epoxy paint to minimize reaction with wet concrete. Cost included with Concrete Superstructure.

The Polyurethane Sealant shall be according to Article 1050.04 of the Std. Spec. and the color shall be gray.

Bar terminators, paid for separately, See Total Bill of Material.

MODEL: Default
FILE NAME: N:\DOT\220628\CAD_Sheets\Structures\15-220628-Superstructure-02.sht

CHRISTOPHER B. BURKE ENGINEERING, LTD.
9575 W. Higgins Road, Suite 600
Rosemont, Illinois 60018
(847) 823-0500

USER NAME = jjezierny	DESIGNED - MM	REVISED -	STATE OF ILLINOIS DEPARTMENT OF TRANSPORTATION
	DRAWN - PDR	REVISED -	
	CHECKED - CF	REVISED -	
PLOT DATE = 3/21/2025	DATE -	REVISED -	

SUPERSTRUCTURE DETAILS
STRUCTURE NO. 071-0058

SCALE: | SHEET S-15 OF S-29 SHEETS | STA. | TO STA.

F.A.* RTE.	SECTION	COUNTY	TOTAL SHEETS	SHEET NO.
*	141-1HBR-3 & (9,10) R-3	OGLE	508	320
		CONTRACT NO. 64N98		
	ILLINOIS	FED. AID PROJECT		

*FAI ROUTE 39 (I-39) & FAP 567 (IL 38)

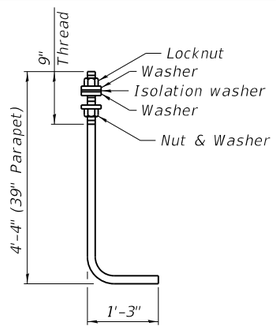

ANCHOR ROD

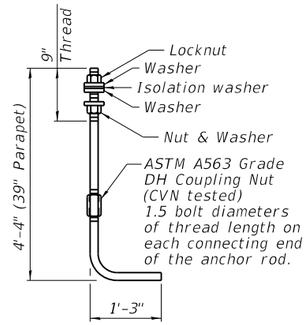

ALTERNATE ANCHOR ROD

Diameter as specified for light poles. (ASTM F 1554 Grade 105) Full length hot dipped galvanized.

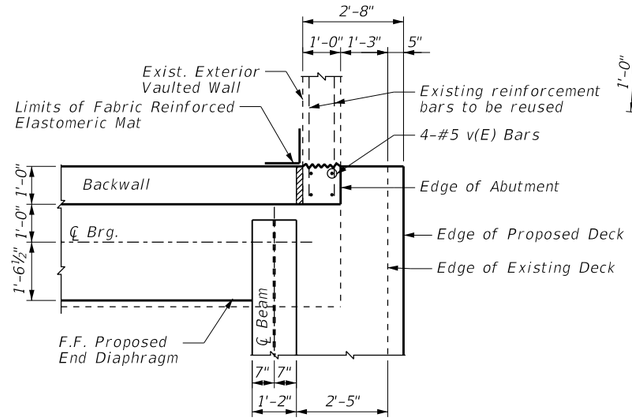

SECTION C-C

See Joint Detail on Sheet S-17 of S-29 for location

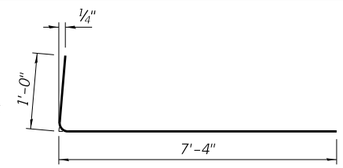

BAR a2(E)

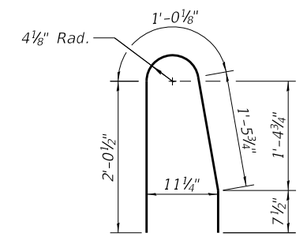

BAR d2(E)

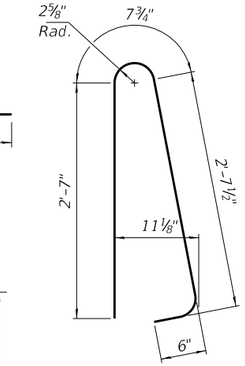

BAR d(E)

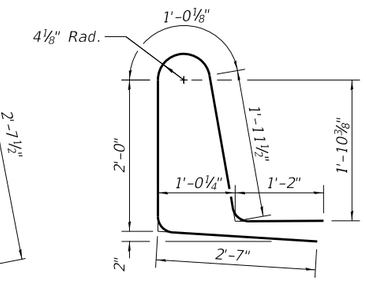

BAR d1(E)

SUPERSTRUCTURE BILL OF MATERIAL

Bar	No.	Size	Length	Shape
a(E)	916	#5	46'-1"	
a1(E)	550	#5	45'-2"	
a2(E)	916	#6	8'-4"	
b(E)	588	#5	38'-6"	
b1(E)	184	#6	38'-5"	
b2(E)	574	#5	33'-6"	
d(E)	640	#5	6'-5"	
d1(E)	640	#5	8'-9"	
d2(E)	640	#5	5'-2"	
d3(E)	24	#6	8'-11"	
d4(E)	12	#6	4'-10"	
d5(E)	640	#5	6'-5"	
e(E)	240	#4	17'-1"	
e1(E)	80	#4	18'-11"	
e2(E)	96	#4	30'-9"	
m10(E)	4	#6	46'-2"	
m11(E)	40	#6	7'-8"	
m12(E)	60	#6	7'-8"	
m13(E)	8	#6	46'-2"	
m14(E)	4	#4	46'-2"	
m15(E)	4	#6	5'-8"	
m16(E)	6	#6	5'-8"	
m20(E)	4	#6	43'-2"	
m23(E)	8	#6	43'-2"	
m24(E)	4	#4	43'-2"	
s10(E)	172	#5	8'-11"	
s11(E)	172	#5	11'-4"	
u10(E)	172	#4	5'-4"	
v(E)	16	#5	3'-6"	
v100(E)	172	#5	3'-2"	
Reinforcement Bars, (Epoxy Coated)			Lbs.	167,630
Concrete Superstructure			Cu. Yds.	700.4

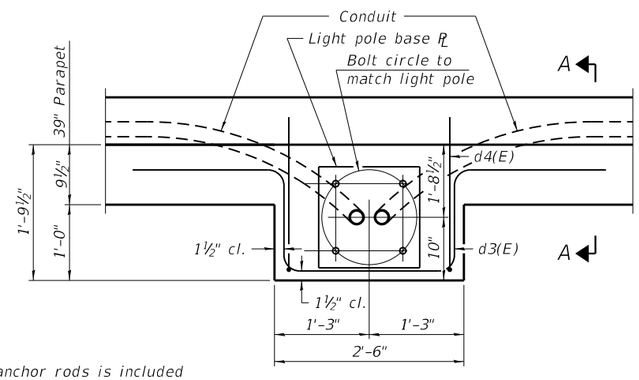

PLAN

Note:
Cost of anchor rods is included with Concrete Superstructure.

NOTES:
1. Existing reinforcement bars extending into the removal area shall be cleaned, straightened, and incorporated into the new construction. Any reinforcement bars that are damaged during concrete removal shall be replaced with an approved bar splicer or anchorage system at the contractor's expense.

2. The limits of removal area shall be sawed a depth of 1/2 in. (13 mm) or less, as required to avoid cutting the reinforcement.

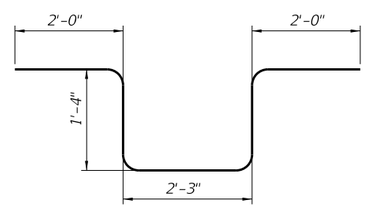

BAR d3E)

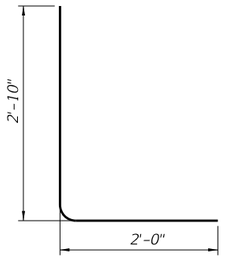

BAR d4E)

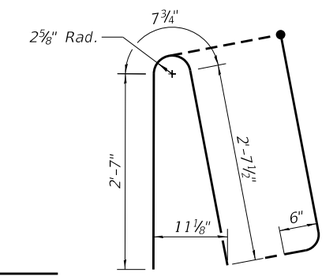

BAR d5(E)

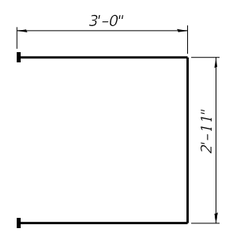

BAR s10(E)

(Headed 344-#5 Bar terminators)

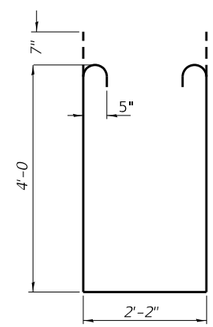

BAR s11(E)

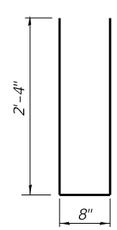

BAR u10(E)

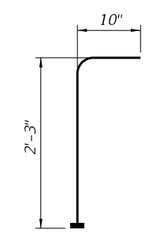

BAR v100(E)

(Headed 172-#5 Bar terminators)

Note:
Bar terminators, paid for seperately. See Total Bill of Material.

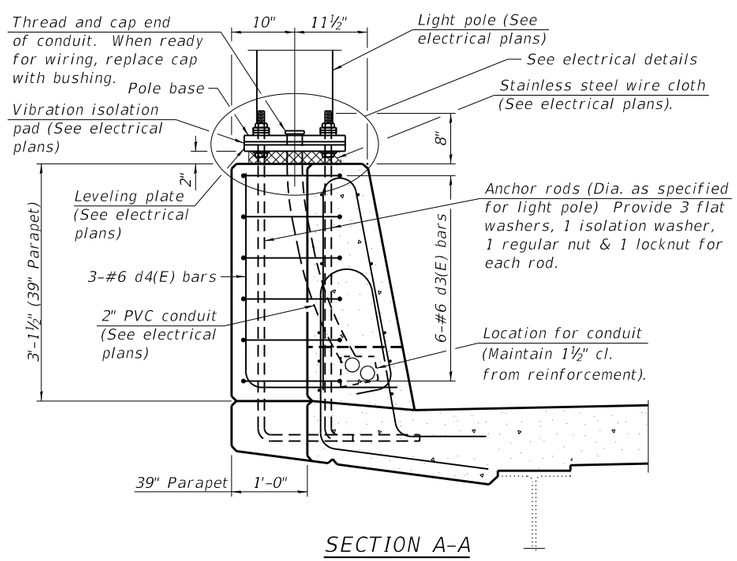

SECTION A-A

MODEL: Default
FILE NAME: N:\DOT\220628\CAD_Sheets\Structures\16-220628-Superstructure_Detail.sht

CHRISTOPHER B. BURKE ENGINEERING, LTD.
9575 W. Higgins Road, Suite 600
Rosemont, Illinois 60018
(847) 823-0500

USER NAME = jjeziemy	DESIGNED - MM	REVISED -	
	DRAWN - PDR	REVISED -	
	CHECKED - CF	REVISED -	
PLOT DATE = 3/21/2025	DATE -	REVISED -	

STATE OF ILLINOIS
DEPARTMENT OF TRANSPORTATION

SUPERSTRUCTURE DETAILS & BILL OF MATERIALS
STRUCTURE NO. 071-0058

SCALE: | SHEET S-16 OF S-29 SHEETS | STA. | TO STA.

F.A.* RTE.	SECTION	COUNTY	TOTAL SHEETS	SHEET NO.
*	141-1HBR-3 & (9,10) R-3	OGLE	508	321
		CONTRACT NO. 64N98		
		ILLINOIS	FED. AID PROJECT	

*FAI ROUTE 39 (I-39) & FAP 567 (IL 38)

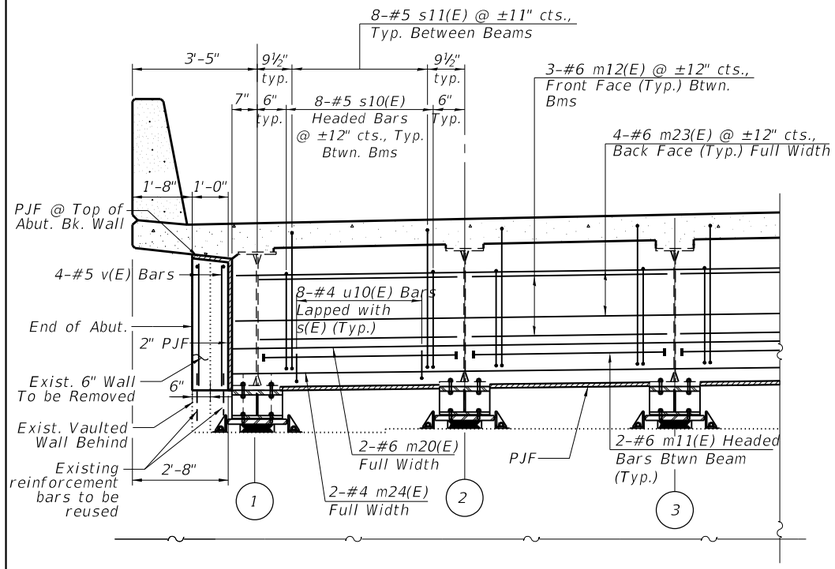

DIAPHRAGM AT ABUTMENTS

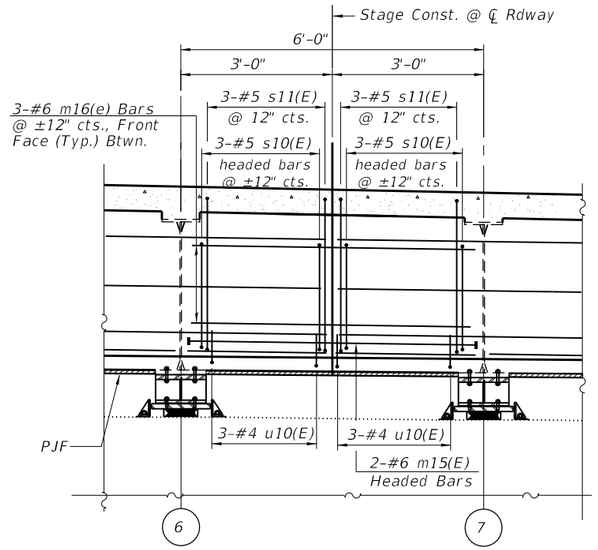

DIAPHRAGM AT STAGE CONSTRUCTION

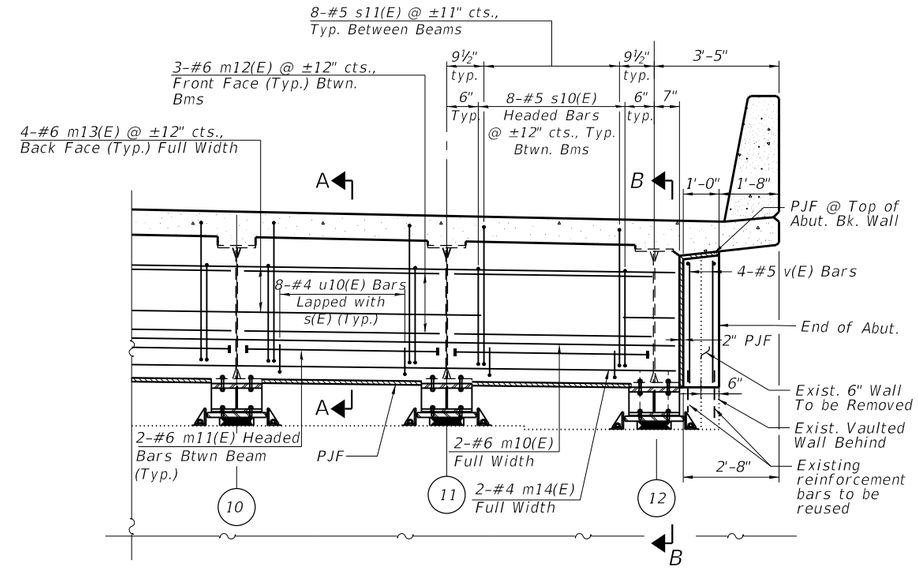

DIAPHRAGM AT ABUTMENTS

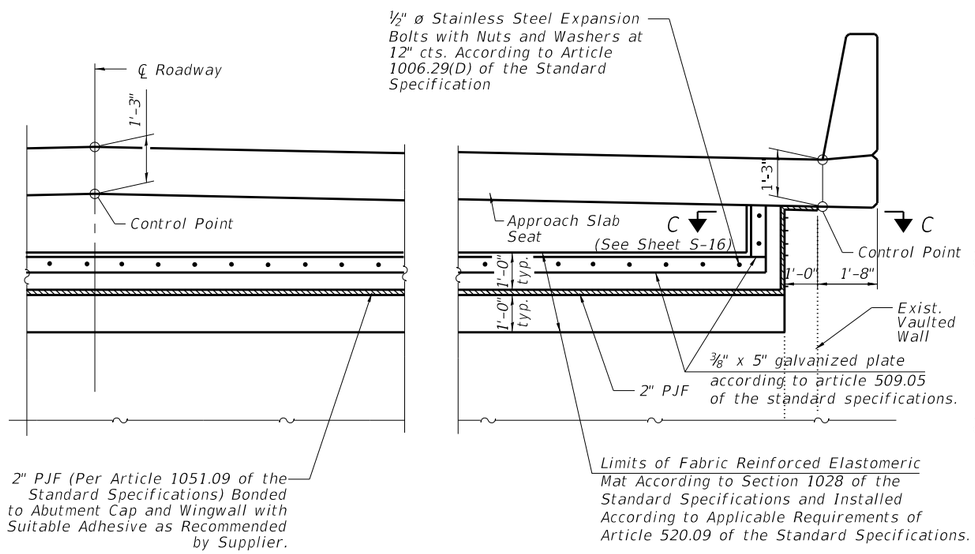

JOINT DETAIL

(looking at back of Abutment)

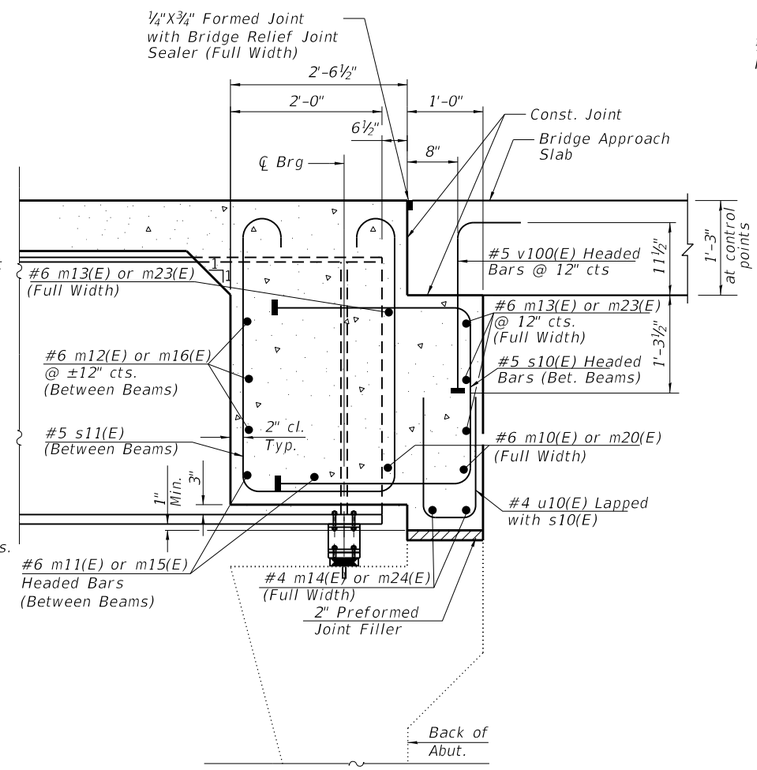

SECTION A-A

(at Rt. ∠'s)

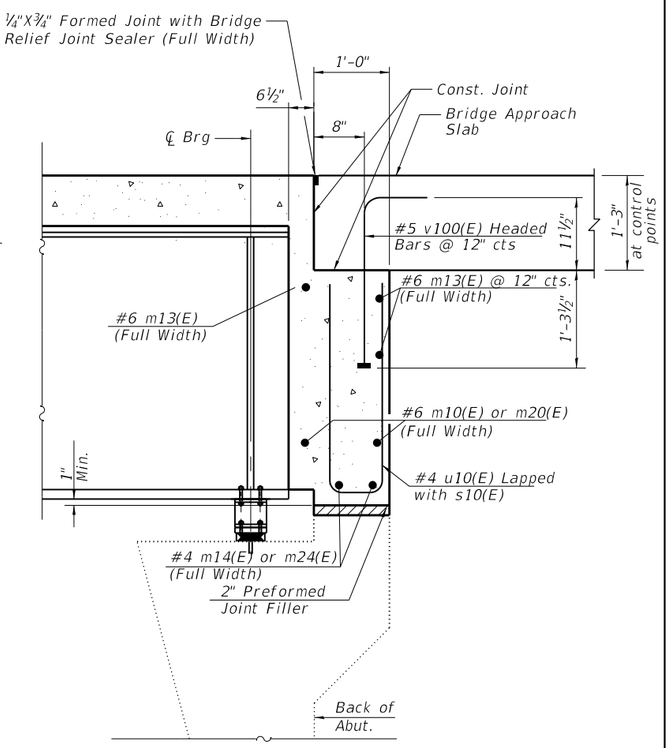

SECTION B-B

(at Rt. ∠'s)

Notes:

See Sheet S-16 for Section C-C, Superstructure Details, and Bill of Material.

The s(E), s1(E), u(E) and v(E) bars shall be placed parallel to the beams. Spacing for these bars shall be at right angles to the beams. and spaced @ right angle to beams.

The approach slab seat shall have a constant slope determined from the control points shown.

The Contractor shall field drill holes in the web of exist. end diaphrgam to pass thru headed s10(E) bars. Cost of drilling is included with "Reinforcement Bars, Epoxy Coated".

Cost of fabric reinforced elastomeric mat, galvanized plate, stainless steel expansion bolts with nuts and washers and installation are included in the cost of Concrete Superstructure.

MODEL: Default
FILE NAME: N:\DOT\220628\CAD_Sheets\Structures\17-220628-Concrete_Diaphragm.sht

CHRISTOPHER B. BURKE ENGINEERING, LTD.
8575 W. Higgins Road, Suite 600
Rosemont, Illinois 60018
(847) 823-0500

USER NAME = jjeziemy	DESIGNED - MM	REVISED -	
	DRAWN - PDR	REVISED -	
	CHECKED - CF	REVISED -	
PLOT DATE = 3/21/2025	DATE -	REVISED -	

STATE OF ILLINOIS
DEPARTMENT OF TRANSPORTATION

CONCRETE DIAPHRAGM DETAILS
STRUCTURE NO. 071-0058

SCALE: | SHEET S-17 OF S-29 SHEETS | STA. | TO STA.

F.A.* RTE.	SECTION	COUNTY	TOTAL SHEETS	SHEET NO.
*	141-1HBR-3 & (9,10) R-3	OGLE	508	322
		CONTRACT NO. 64N98		
	ILLINOIS	FED. AID PROJECT		

*FAI ROUTE 39 (I-39) & FAP 567 (IL 38)

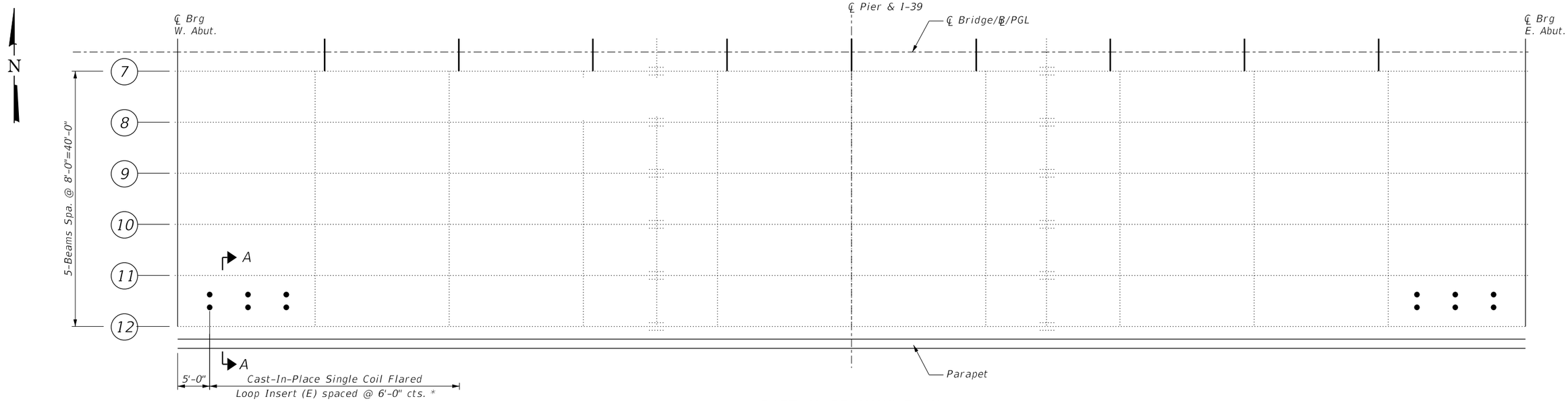

PARTIAL FRAMING PLAN

* Coordinate single coil flared loop inserts for conduit support. The cost of single coil flared loop inserts shall be included in the cost of Concrete Superstructure.

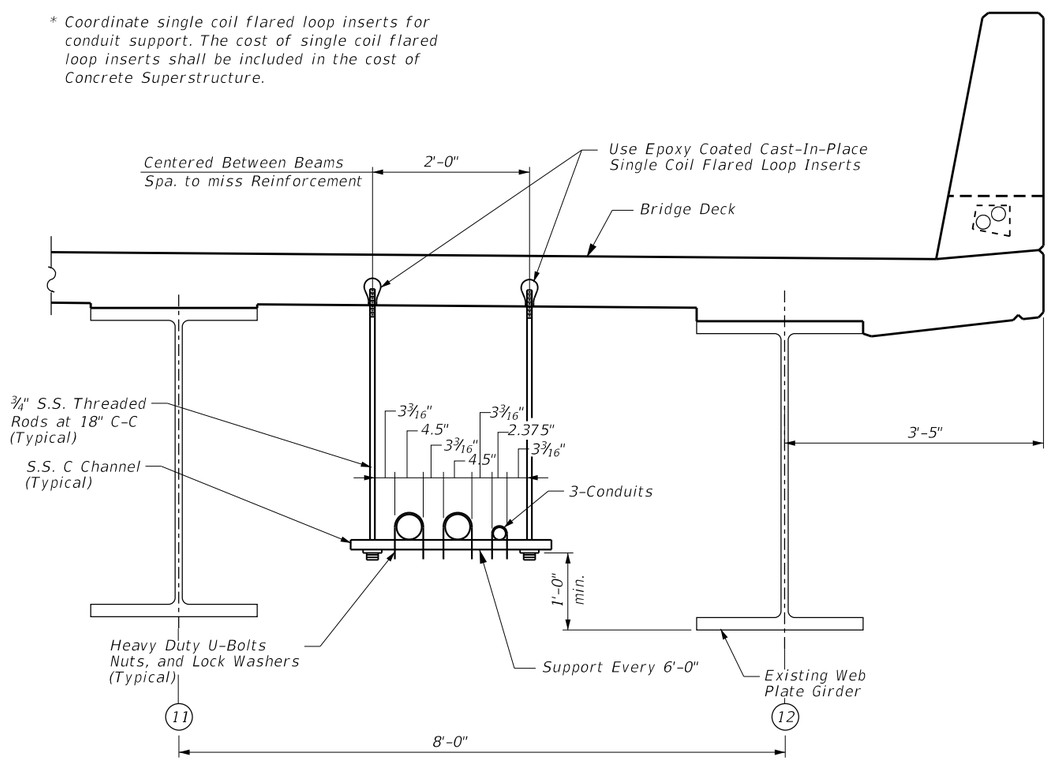

SECTION A-A
TYPICAL CONDUIT SUPPORT
ATTACHED TO BRIDGE DECK DETAIL

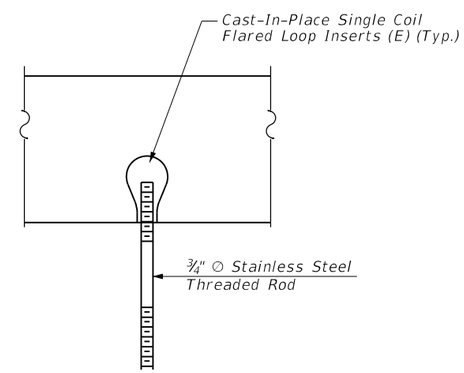

THREADED COIL LOOP
INSERTS DETAIL

NOTE:
For more detail and information, See Traffic Signal Plans.

MODEL: Default
FILE NAME: N:\DOT\220628\CAD_Sheets\Structures\18-220628-Conduit Support_Detail.sht

CHRISTOPHER B. BURKE ENGINEERING, LTD. 9575 W. Higgins Road, Suite 600 Rosemont, Illinois 60018 (847) 823-0500	USER NAME = jjeziemy	DESIGNED - MM	REVISED -	STATE OF ILLINOIS DEPARTMENT OF TRANSPORTATION	CONDUIT SUPPORT DETAILS STRUCTURE NO. 071-0058	F.A.* RTE.	SECTION	COUNTY	TOTAL SHEETS / SHEET NO.
		DRAWN - PDR	REVISED -			*	141-1HBR-3 & (9,10) R-3	OGLE	508 / 323
		CHECKED - CF	REVISED -					CONTRACT NO. 64N98	
	PLOT DATE = 3/21/2025	DATE -	REVISED -		SCALE: SHEET S-18 OF S-29 SHEETS STA. TO STA.		ILLINOIS	FED. AID PROJECT	

*FAI ROUTE 39 (I-39) & FAP 567 (IL 38)

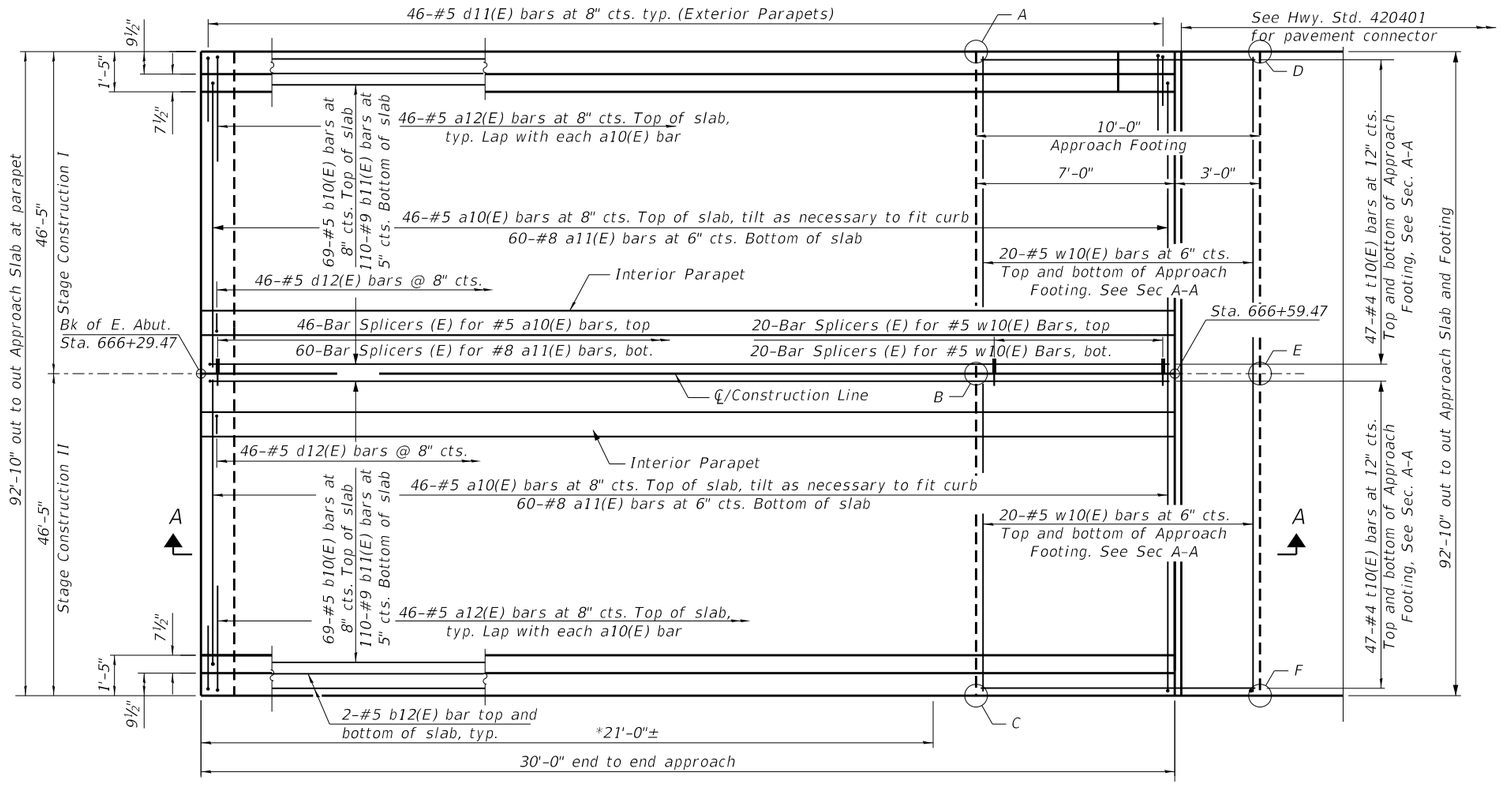

PLAN

(East approach slab shown; West approach slab similar by 180° rotation)

* Contractor shall provide formwork/falsework to construct the approach slab outside of vaulted wall. Cost included in Concrete Superstructure (Approach Slab).

TOP AND BOTTOM ELEVATIONS FOR APPROACH FOOTING

E. Approach			W. Approach		
Point/ Location	Top	Bottom	Point/ Location	Top	Bottom
A-NW	823.92	823.09	A-NE	824.26	823.43
B-W,CL	824.61	823.78	B-E,CL	824.95	824.12
C-SW	823.92	823.09	C-SE	824.26	823.43
D-NE	823.83	823.00	D-NW	824.20	823.37
E-E,CL	824.53	823.70	E-W,CL	824.89	824.06
F-SE	823.83	823.00	F-SW	824.20	823.37

NOTE: Drill and set #5 d2(E) bar according to Article 509.06 of the Standard Specifications. Drilled holes shall be roughened or scored per manufaccturer's recommendations. Maximum hole depth shall not exceed 6". Contractor shall take all necessary precautions to prevent drilled hole interference with deck reinforcement bars. Locate longitudinal bars to miss drilled locations. Located drilled holes to miss traverse bars in deck. Cost included with "Reinforcement Bars, Epoxy Coated".

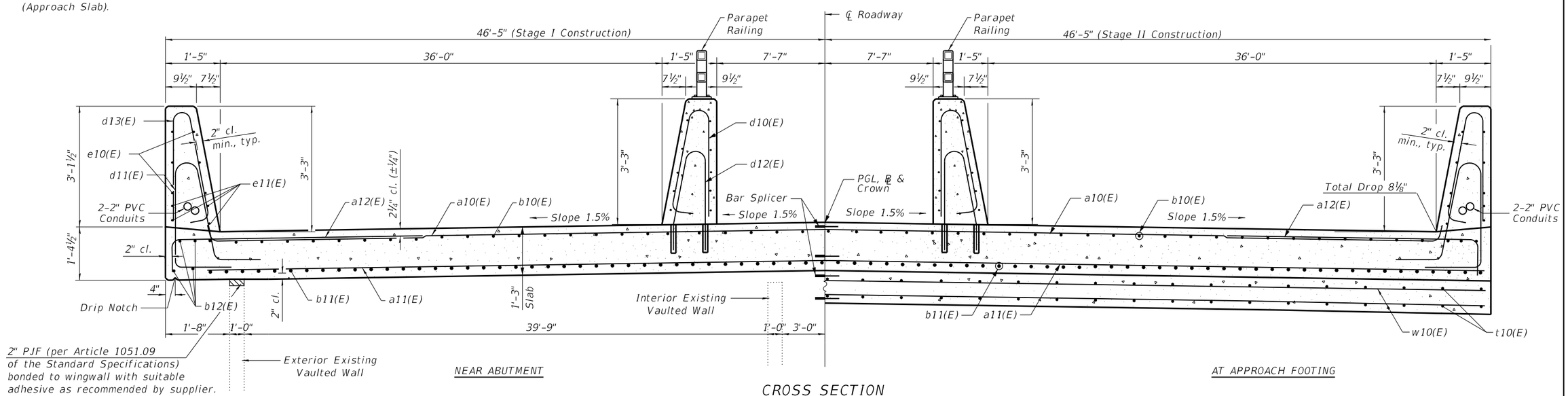

CROSS SECTION

MODEL: Default
FILE NAME: N:\IDOT\220628\CAD_Sheets\Structures\19-220628-Approach-01.sht

CHRISTOPHER B. BURKE ENGINEERING, LTD.
9575 W. Higgins Road, Suite 600
Rosemont, Illinois 60018
(847) 823-0500

USER NAME =]]eziemy	DESIGNED - MM	REVISED -	
	DRAWN - PDR	REVISED -	
	CHECKED - CF	REVISED -	
PLOT DATE = 3/21/2025	DATE -	REVISED -	

STATE OF ILLINOIS
DEPARTMENT OF TRANSPORTATION

APPROACH SLAB DETAILS (1 OF 2)
STRUCTURE NO. 071-0058

SCALE: | SHEET S-19 OF S-29 SHEETS | STA. | TO STA.

F.A.* RTE.	SECTION	COUNTY	TOTAL SHEETS	SHEET NO.
*	141-1HBR-3 & (9,10) R-3	OGLE	508	324
		CONTRACT NO. 64N98		
	ILLINOIS	FED. AID PROJECT		

*FAI ROUTE 39 (I-39) & FAP 567 (IL 38)

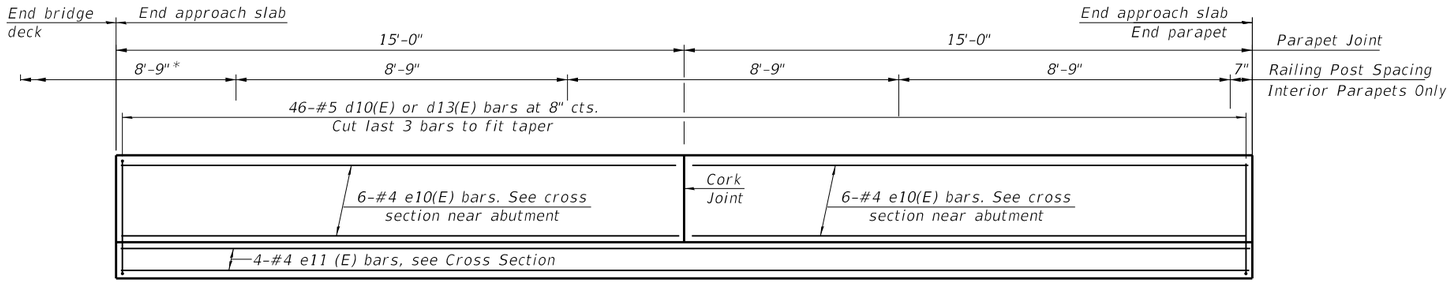

* Rail spacing will continue onto bridge deck.
See Sheet S-15 of S29 for railing post spacing on bridge deck.

INSIDE ELEVATION OF INTERIOR & EXTERIOR PARAPET

Notes:

The joint opening shall be adjusted for temperature per Article 520.04 of the Standard Specifications. However, since this detail is for jointless structures, the length of bridge used to calculate the adjustment shall be equal to half the total bridge length plus the length of the bridge approach slab.

Parapet concrete shall be paid for as Concrete Superstructure.

Approach slab shall be paid for as Concrete Superstructure (Approach Slab).

Approach footing concrete shall be paid for as Concrete Structures.

The approach footing maximum applied service bearing pressure (Qmax) = 2.0 ksf.

Cost of excavation for approach footing included with Concrete Structures.

For Granular Backfill for Structures, See Sheet S-2 of S-29.

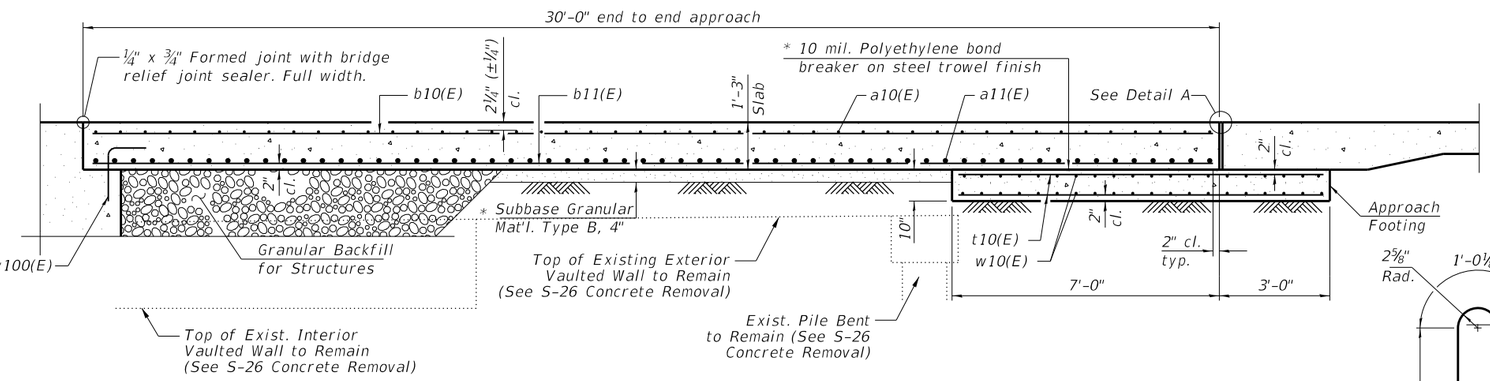

SECTION A-A

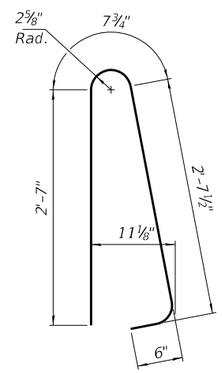

BAR d10(E)

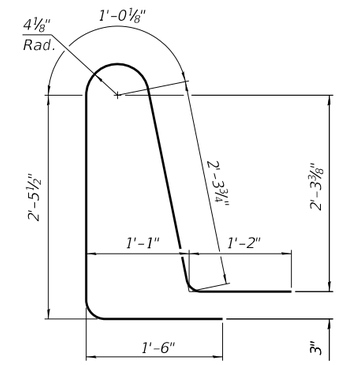

BAR d11(E)

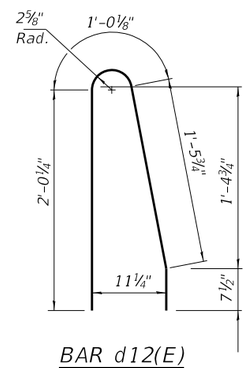

BAR d12(E)

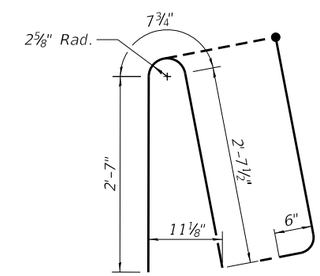

BAR d13(E)

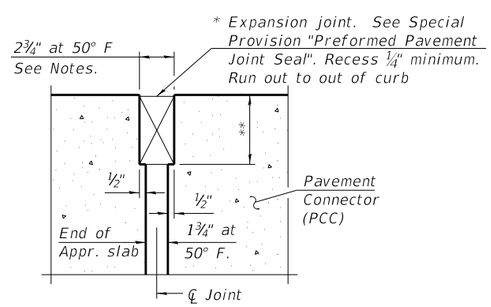

DETAIL A

* Cost included with Concrete Superstructure (Approach Slab).

** Per manufacturer recommendations

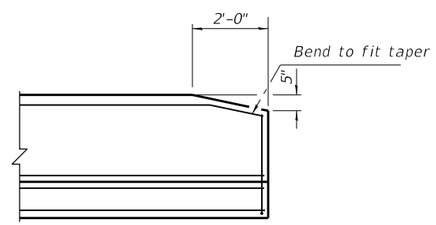

DETAIL - END EXTERIOR PARAPET

(Taper Only at Top of SE & NW Parapets)

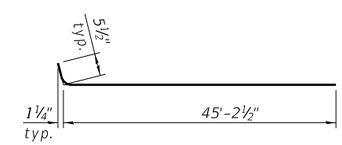

BAR a10(E)

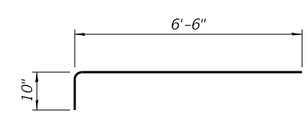

BAR a12(E)

TWO APPROACHES BILL OF MATERIAL

Bar	No.	Size	Length	Shape
a10(E)	184	#5	45'-8"	
a11(E)	240	#8	45'-3"	
a12(E)	184	#5	7'-4"	
b10(E)	276	#5	29'-8"	
b11(E)	440	#9	29'-8"	
b12(E)	16	#5	29'-8"	
d10(E)	184	#5	6'-5"	
d11(E)	184	#5	8'-9"	
d12(E)	184	#5	5'-2"	
d13(E)	184	#5	6'-5"	
e10(E)	96	#4	14'-8"	
e11(E)	32	#4	29'-8"	
t10(E)	376	#4	9'-8"	
w10(E)	160	#5	46'-1"	
Concrete Superstructure			Cu. Yd.	31.5
Concrete Superstructure (Approach Slab)			Cu. Yd.	257.9
Concrete Structures			Cu. Yd.	57.1
Reinforcement Bars, Epoxy Coated			Pound	109,410
Bar Splicers			Each	292

MODEL: Default
FILE NAME: N:\DOT\220628\CAD_Sheets\Structures\20-220628-Approach-02.sht

CHRISTOPHER B. BURKE ENGINEERING, LTD.
9575 W. Higgins Road, Suite 600
Rosemont, Illinois 60018
(847) 823-0500

USER NAME = jjeziemy	DESIGNED - MM	REVISED -	
	DRAWN - PDR	REVISED -	
	CHECKED - CF	REVISED -	
PLOT DATE = 3/21/2025	DATE -	REVISED -	

STATE OF ILLINOIS
DEPARTMENT OF TRANSPORTATION

APPROACH SLAB DETAILS (2 OF 2)
STRUCTURE NO. 071-0058

SCALE: | SHEET S-20 OF S-29 SHEETS | STA. | TO STA.

F.A.* RTE.	SECTION	COUNTY	TOTAL SHEETS	SHEET NO.
*	141-1HBR-3 & (9,10) R-3	OGLE	508	325
		CONTRACT NO. 64N98		
	ILLINOIS	FED. AID PROJECT		

*FAI ROUTE 39 (I-39) & FAP 567 (IL 38)

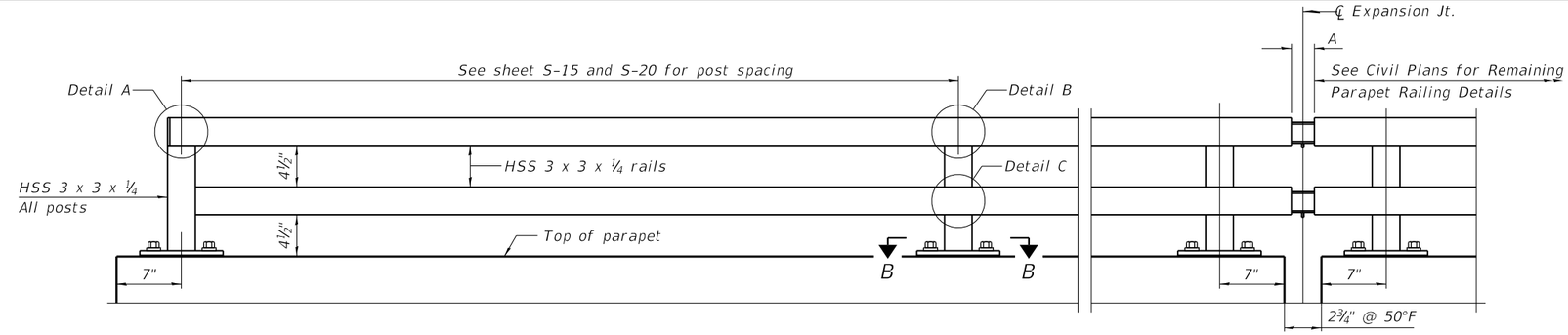

ELEVATION PARAPET RAILING

(Inside face)

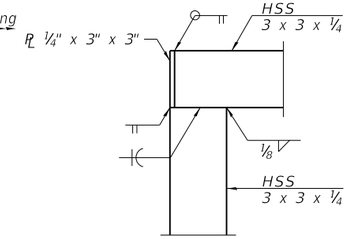

DETAIL A

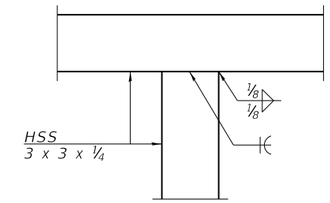

DETAIL B

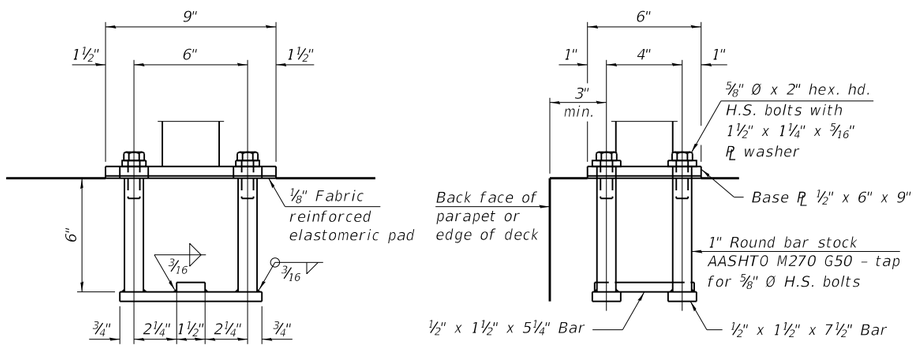

ANCHORAGE ASSEMBLY

The Bicycle Railing fasteners for end posts near expansion joints may need to be installed prior to installing the bent plates.

In lieu of the cast-in-place anchor device shown, the Contractor has the option of drilling and setting ⅝" Ø fully threaded anchor rods with the same plate washers as specified above and heavy hex lock nuts according to Article 509.06 of the Standard Specifications. Embedment shall be according to the manufacturer's specifications.

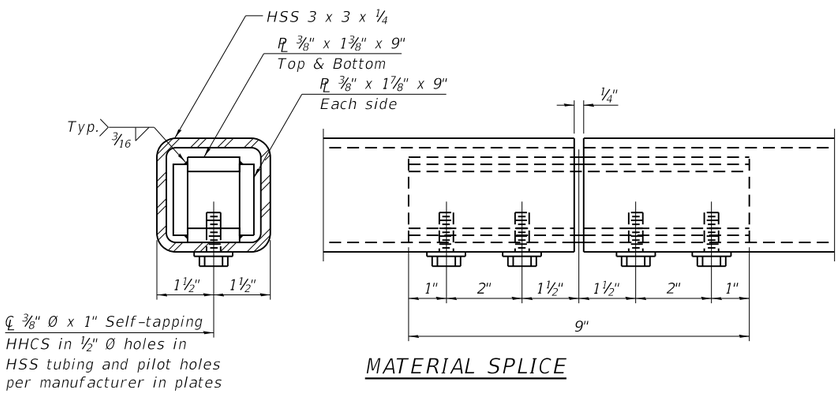

MATERIAL SPLICE

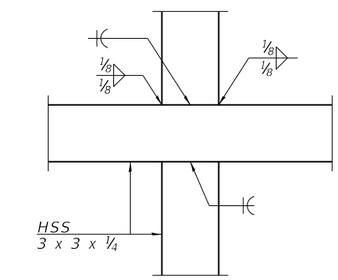

DETAIL C

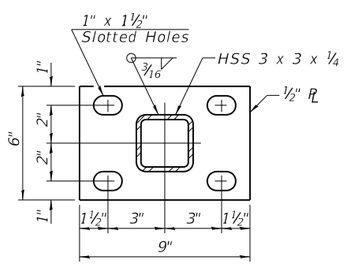

SECTION B-B

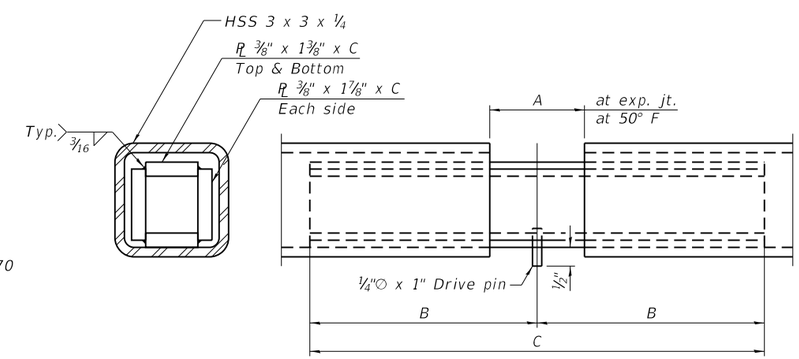

EXPANSION SPLICE

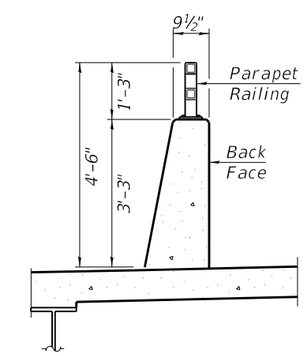

SECTION THRU DECK

Notes:

Place reinforcement bars to miss anchor rod locations.

All HSS tubing used for the Parapet Railing shall be CVN tested according to Article 1006.34(b) of the Standard Specifications.

All HSS tubing used for the Parapet Railing shall be ASTM A500 grade C.

All base plates used for the Paraper Railing shall be AASHTO M270 grade 50.

All heavy hex nuts shall be according to ASTM A 563 grade DH.

All fully threaded anchor rods shall be ASTM F1554 grade 105.

The post base plate shall be fastened to the curb snug tight and given an additional ⅛" turn.

Rail splice inserts may be built out of bent plates of the same thicknesses and outside geometry limits as the 4 plate rail splice inserts shown.

When the contract specifies a galvanized railing, all steel rail elements shall be galvanized according to Article 509.05 of the Standard Specifications.

RAILING CRITERIA

MASH 2016 Test Level	4
Parapet Railing Weight (plf)	25
Max Post Spacing	10'-0"

TABLE OF DIMENSIONS

Location	T	A	B	C	D	E
Over Preformed Pavment Joint Seal	≤4"	2½"	1'-2"	2'-4"	7¼"	7"

T= ; total movement based on total temperature range from -20°F to 120°F along centerline of roadway at expansion joint.

BILL OF MATERIAL

Item	Unit	Quantity
Parapet Railing	Foot	546

MODEL: Default
FILE NAME: N:\DOT\220628\CAD_Sheets\Structures\21-220628-Railing Details.sht

CHRISTOPHER B. BURKE ENGINEERING, LTD.
9575 W. Higgins Road, Suite 600
Rosemont, Illinois 60018
(847) 823-0500

USER NAME =]jeziemy	DESIGNED - MM	REVISED -	
	DRAWN - PDR	REVISED -	
	CHECKED - CF	REVISED -	
PLOT DATE = 3/21/2025	DATE -	REVISED -	

STATE OF ILLINOIS
DEPARTMENT OF TRANSPORTATION

RAILING DETAILS
STRUCTURE NO. 071-0058

SCALE: SHEET S-21 OF S-29 SHEETS STA. TO STA.

F.A.* RTE.	SECTION	COUNTY	TOTAL SHEETS	SHEET NO.
*	141-1HBR-3 & (9,10) R-3	OGLE	508	326
		CONTRACT NO. 64N98		
	ILLINOIS	FED. AID PROJECT		

*FAI ROUTE 39 (I-39) & FAP 567 (IL 38)

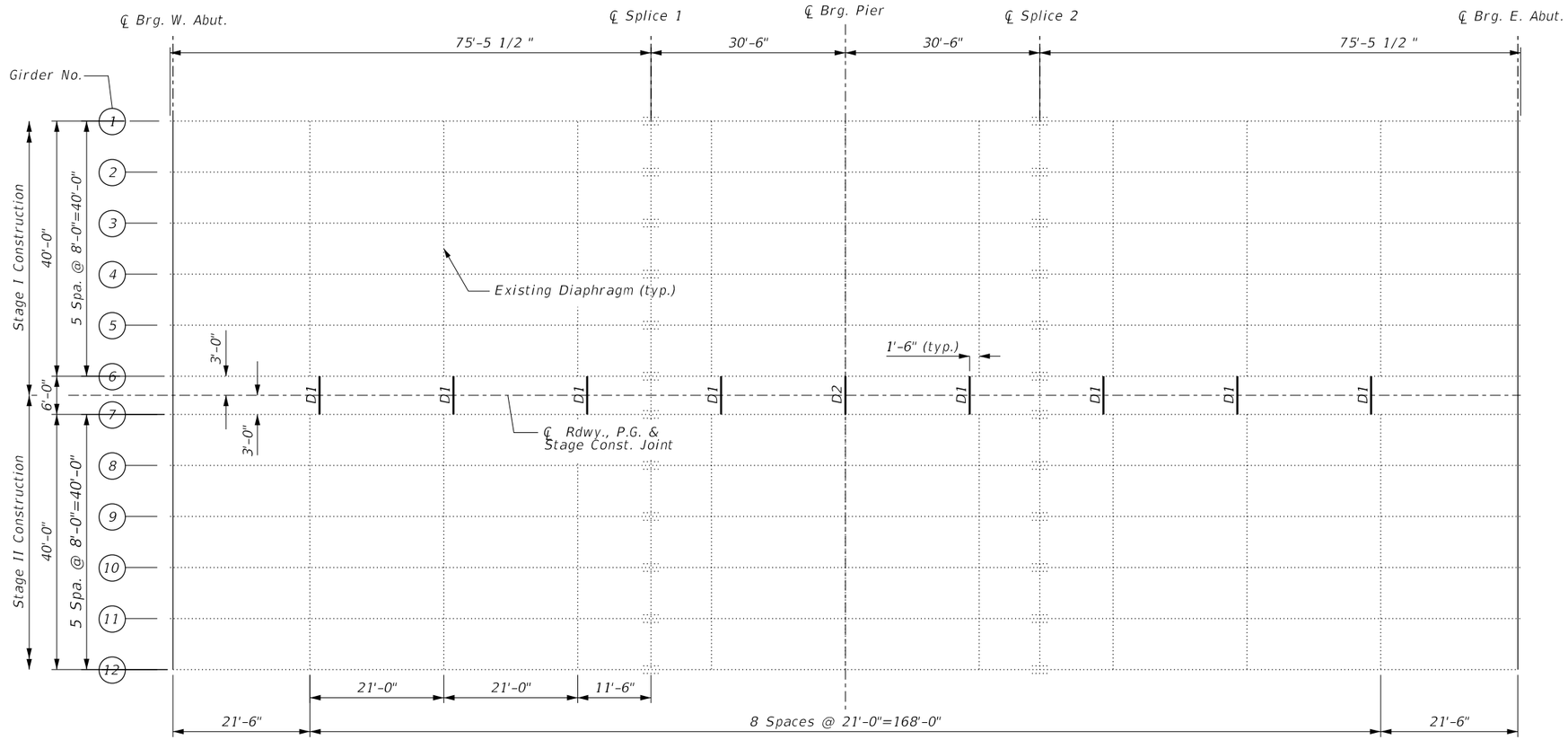

FRAMING PLAN

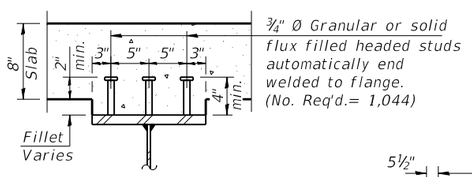

SECTION A-A

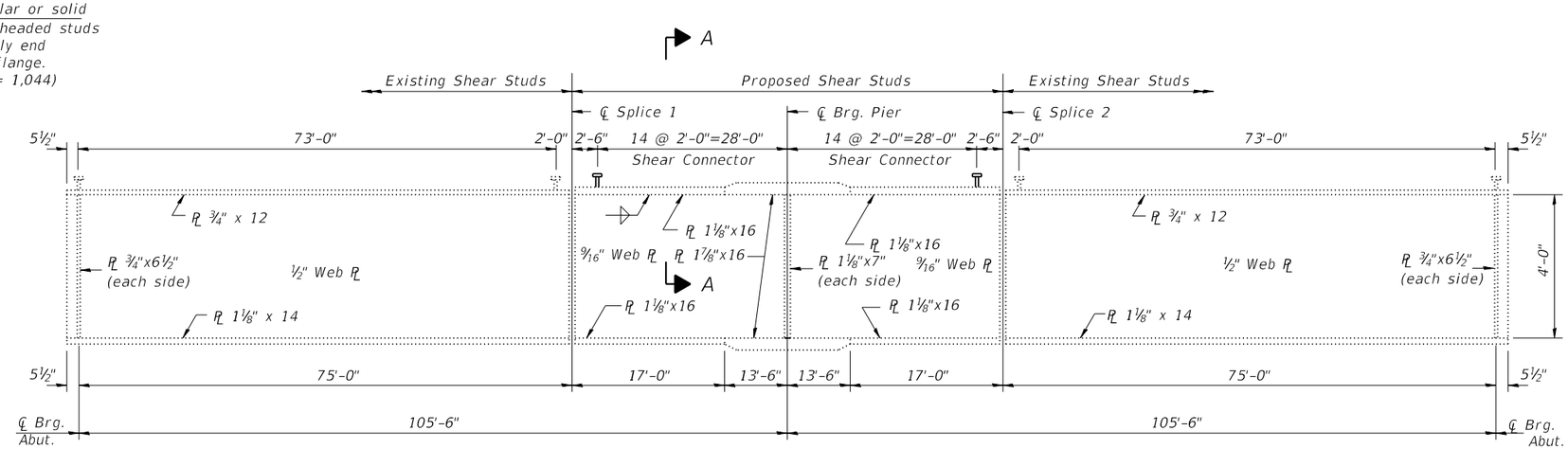

EXISTING GIRDER ELEVATION

Notes:

1. All interior diaphragms shall be installed and secured with erection pins and bolts except as otherwise noted. Individual diaphragms at supports may be temporarily disconnected to install bearing anchor bolts.

MODEL: Default
FILE NAME: N:\IDOT\220628\CAD_Sheets\Structures\22-220628-Framing.sht

CHRISTOPHER B. BURKE ENGINEERING, LTD. 9575 W. Higgins Road, Suite 600 Rosemont, Illinois 60018 (847) 823-0500	USER NAME = jjeziemy	DESIGNED - MM	REVISED -	STATE OF ILLINOIS DEPARTMENT OF TRANSPORTATION	FRAMING PLAN STRUCTURE NO. 071-0058	F.A.* RTE.	SECTION	COUNTY	TOTAL SHEETS	SHEET NO.
		DRAWN - PDR	REVISED -			*	141-1HBR-3 & (9,10) R-3	OGLE	508	327
		CHECKED - CF	REVISED -					CONTRACT NO. 64N98		
	PLOT DATE = 3/21/2025	DATE -	REVISED -		SCALE: SHEET S-22 OF S-29 SHEETS STA. TO STA.		ILLINOIS	FED. AID PROJECT		

*FAI ROUTE 39 (I-39) & FAP 567 (IL 38)

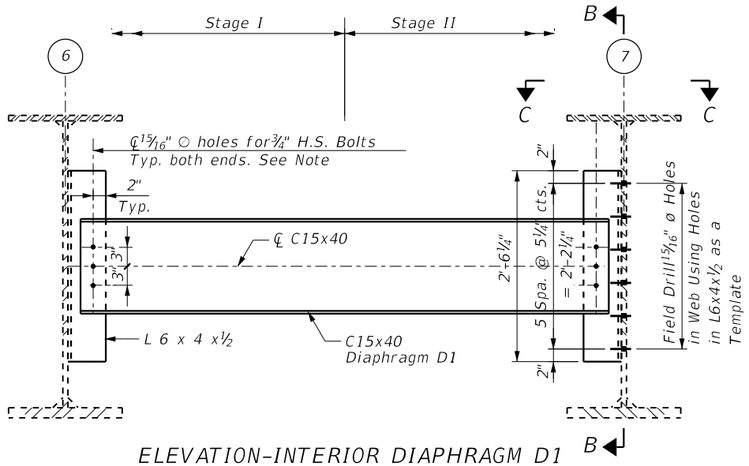

ELEVATION-INTERIOR DIAPHRAGM D1

(8 Required)

NOTE:
Install only the center bolt at each end of diaphragm D1.
The bolts shall be finger tighened prior to deck pour to permit rotation of diaphragm D1. Install the remaining bolts and fully tighten after stage two deck our is complete.

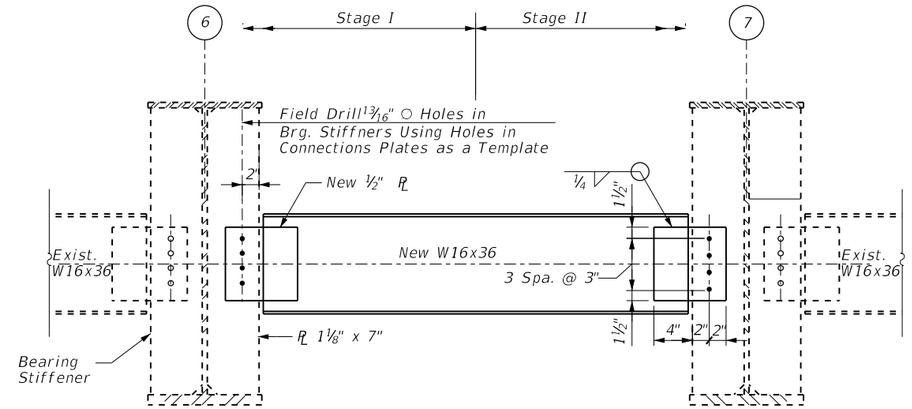

PIER DIAPHRAGM D2

(1 Required)

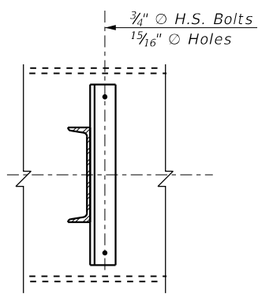

SECTION B-B

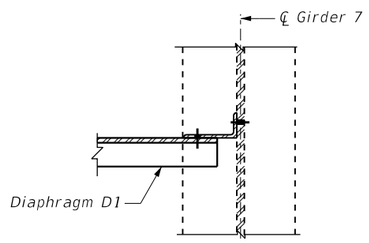

SECTION C-C

(Top Flange Not Shown)

INTERIOR DIAPHRAGM DETAILS

NOTE:
Two hardened washers are required for each set of oversized holes.

INTERIOR DIAPHRAGM INSTALLATION:

1. Interior Diaphragm shall be installed after Stage I Removal and before Stage I Construction.
2. The new diaphragms shall be offset 1'-6" from the exiting ones, see framing plan.
3. Fabricate, cut the new angles, and drill 15/16" Φ holes for 3/4" H.S. bolts in both legs of L 6" x 4" x 1/2" the new angles
4. Field drill 15/16" Φ holes for 3/4" H.S. holes at the web of the plate girders. Bolts holes spacing in the web of girders shall match the spacing on leg of the angles. The cost of field drilling is included in Furnishing and Erecting Structural Steel.
5. Install the L 6 x 4 x1/2 angles to web of beam 6 & 7.
6. Erect C15 x 40 and install the bolts.

	INTERIOR GIRDER MOMENT TABLE			
			0.4 Sp. 1 or 0.6 Sp. 2	Pier
	Is	(in^4)	18,884	42,519
	Ic(n)	(in^4)	51,291	49,218
	Ic(3n)	(in^4)	38,057	49,218
	Ss	(in^3)	871	1,643
	Sc(n)	(in^3)	1,207	1,720
	Sc(3n)	(in^3)	1,116.8	1,720
	Z	(in^3)	-	-
	w_D	(k/')	1.02	1.02
	M_{D}	('k)	325.4	1,737.7
	s_{D}	(k/')	0.55	0.55
	M_{sD}	('k)	217.5	850.8
	M_{L}	('k)	803.6	1,014.9
	MI	('k)	174.4	220.2
	$\frac{5}{3}[M_L + I]$	('k)	1,630.0	2,058.5
	Ma	('k)	2,824.7	6,041.7
*	Mu	('k)	-	-
	fs w_D non-comp	(ksi)	4.48	12.7
	fs w_D (comp)	(ksi)	2.34	5.94
	fs $\frac{5}{3}[M_L + M_I]$	(ksi)	16.2	14.4
	fs (Overload)	(ksi)	23.0	33.00
**	fs (Total)	(ksi)	29.93	42.91
	VR	(k)	46.0	61.0

	INTERIOR GIRDER REACTION TABLE			
			Abut.	Pier
	R_{D}	(k)	*** 94.0	214.6
	R_{L}	(k)	51.2	81.6
	R_{I}	(k)	11.1	17.7
	R_{Total}	(k)	156.3	314.0

* Compact section
** Braced non-compact and partially braced section
*** R_{D} includes service reaction due to weight of Approach Slab

Is, Ss: Non-composite moment of inertia and section modulus of the steel section used for computing fs(Total and Overload) due to non-composite dead loads ($in.^4$ and $in.^3$).

Ic(n), Sc(n): Composite moment of inertia and section modulus of the steel and deck based upon the modular ratio, "n", used for computing fs(Total and Overload) due to short-term composite live loads ($in.^4$ and $in.^3$).

Ic(3n), Sc(3n): Composite moment of inertia and section modulus of the steel and deck based upon 3 times the modular ratio, "3n", used for computing fs(Total and Overload) due to long-term composite (superimposed) dead loads ($in.^4$ and $in.^3$).

Z: Plastic Section Modulus of the steel section in non-composite areas ($in.^3$).

w_D: Un-factored non-composite dead load (kips/ft.).

M_{D}: Un-factored moment due to non-composite dead load (kip-ft.).

s_{D}: Un-factored long-term composite (superimposed) dead load (kips/ft.)

M_{sD}: Un-factored moment due to long-term composite (superimposed) dead load (kip-ft.).

M_{L}: Un-factored live load moment (kip-ft.).

MI: Un-factored moment due to impact (kip-ft.).

Ma: Factored design moment (kip-ft.).
$1.3\ [M_{D} + M_{sD} + \frac{5}{3}(M_{L} + MI)]$

Mu: Compact composite moment capacity according to AASHTO LFD 10.50.1.1 or compact non-composite moment capacity according to AASHTO LFD 10.48.1 (kip-ft.).

fs (Overload): Sum of stresses as computed from the moments below (ksi).
$M_{D} + M_{sD} + \frac{5}{3}(M_{L} + MI)$

fs (Total): Sum of stresses as computed from the moments below on non-compact section (ksi).
$1.3\ [M_{D} + M_{sD} + \frac{5}{3}(M_{L} + MI)]$

VR: Maximum M_{L} + impact shear range within the composite portion of the span for stud shear connector design (kips).

BILL OF MATERIAL

Item	Unit	Total
Furnishing and Erecting . Structural Steel	Pound	2,005

MODEL: Default
FILE NAME: N:\DOT\220628\CAD_Sheets\Structures\23-220628-Steel_Diaphragm_Detail.sht

CHRISTOPHER B. BURKE ENGINEERING, LTD.
8575 W. Higgins Road, Suite 600
Rosemont, Illinois 60018
(847) 823-0500

USER NAME = jjeziemy	DESIGNED - MM	REVISED -	
	DRAWN - PDR	REVISED -	
	CHECKED - CF	REVISED -	
PLOT DATE = 3/21/2025	DATE -	REVISED -	

STATE OF ILLINOIS
DEPARTMENT OF TRANSPORTATION

STEEL DIAPHRAGM DETAILS
STRUCTURE NO. 071-0058

SCALE: SHEET S-23 OF S-29 SHEETS STA. TO STA.

F.A.* RTE.	SECTION	COUNTY	TOTAL SHEETS	SHEET NO.
*	141-1HBR-3 & (9,10) R-3	OGLE	508	328
		CONTRACT NO. 64N98		
	ILLINOIS	FED. AID PROJECT		

*FAI ROUTE 39 (I-39) & FAP 567 (IL 38)

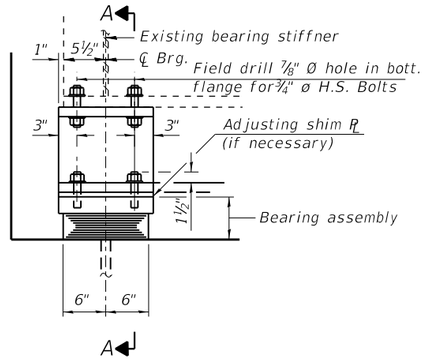

ELEVATION AT ABUT.

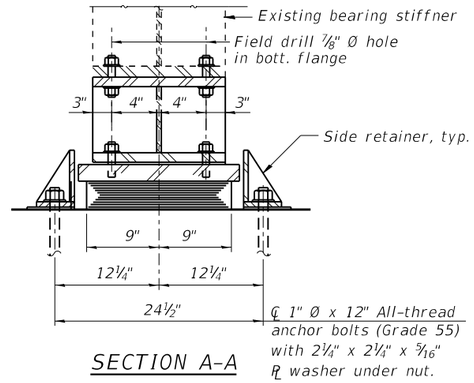

SECTION A-A

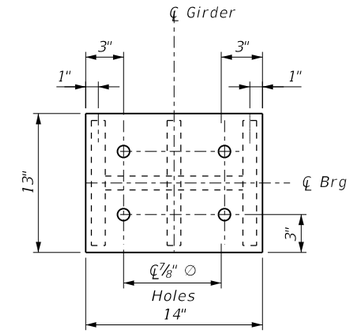

PLAN

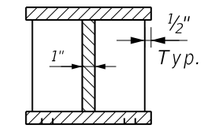

SECTION B-B

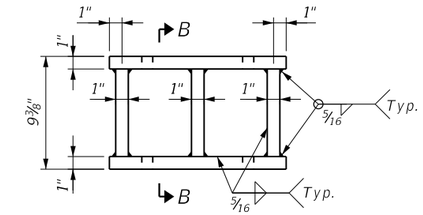

ELEVATION

FABRICATED STEEL EXTENTION

TYPE I ELASTOMERIC EXP. BRG.

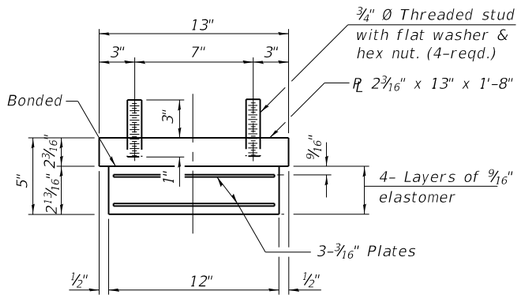

BEARING ASSEMBLY

Note:
Shim plates shall not be placed under bearing assembly.

Notes:
Side retainers and stainless steel plates shall be included in the cost of Elastomeric Bearing Assembly, Type I.
Anchor bolts and side retainers at all supports shall be installed as each member is erected unless an equivalent temporary means of lateral restraint is used.
The structural steel plates of the Bearing Assembly shall conform to the requirements of AASHTO M270 Grade 50.
Two ⅛ inch adjustment shims shall be provided for each bearing in addition to all other plates or shims and placed as shown on bearing details.
Steel extensions shall be paid for as Furnishing and Erecting Structural Steel.
Prior to ordering any material, the Contractor shall field measures, record and provide a copy to thr Engineer will all required bearing and shim dimensions, including if there are conflicts between the existing as-built anchor bolts and proposed anchor bolt locations. Cost included with "Jack and Remove Existing Bearing".
See Sheets S-25 of S-29 for bridge seat repair locations.

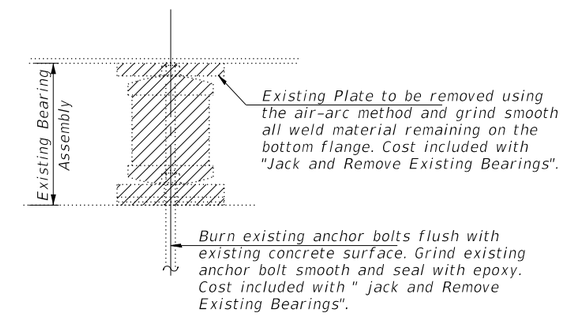

EXISTING ROCKER BEARING REMOVAL DETAIL

BEAM REACTION TABLE

	W. Abut.	E. Abut.
R PL * (k)	10.0	10.0

* Service Dead Load Reactions shown in table.
Jacking Capacity Required at each beam is 15.0k (1.5 times the service dead load reaction).

BILL OF MATERIAL

Item	Unit	Total
Elastomeric Bearing Assembly Type I	Each	24
Anchor Bolts, 1"	Each	48
Jack & Remove Existing Bearing	Each	24
Furnishing & Erecting Structural Steel	Pound	4,505

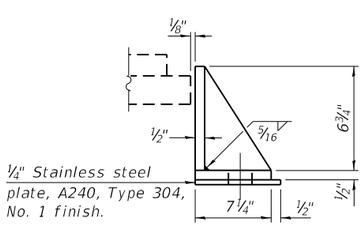

SIDE RETAINER

Equivalent rolled angle with stiffeners will be allowed in lieu of welded plates.

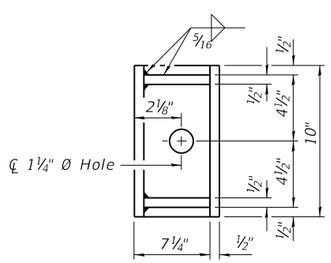

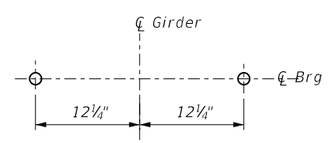

ANCHOR BOLT LAYOUT DETAIL

JACKING & REMOVING EXISTING BEARING PROCEDURE:

1. Jack and remove existing bearings shall be conducted according to the Special Provision "Jack and Remove Existing Bearings". See Beam Reaction Table for Loads.
2. The Contractor shall submit, for approval by the Engineer, plans for jacking existing girders and removing bearings prior to commencing any related work. See Special Provisions.
3. New Bearings and steel extensions shall be in place and jacks shall be lowered prior to pouring to new concrete deck in that stage.
4. Jacking and removing existing bearings shall be done in stages after deck removal for each stage and prior to construction of the new deck for each stage, as approved by the Engineer.
5. Field drill holes in the bottom flange of the girders to match steel extension top holes. Cost of field drilling holes is included with "Jack and Remove Existing Bearings".
6. The new holes for anchor bolts shall be drilled at the locations shown on this sheet. Cost is included with "Jack and Remove Existing Bearings".

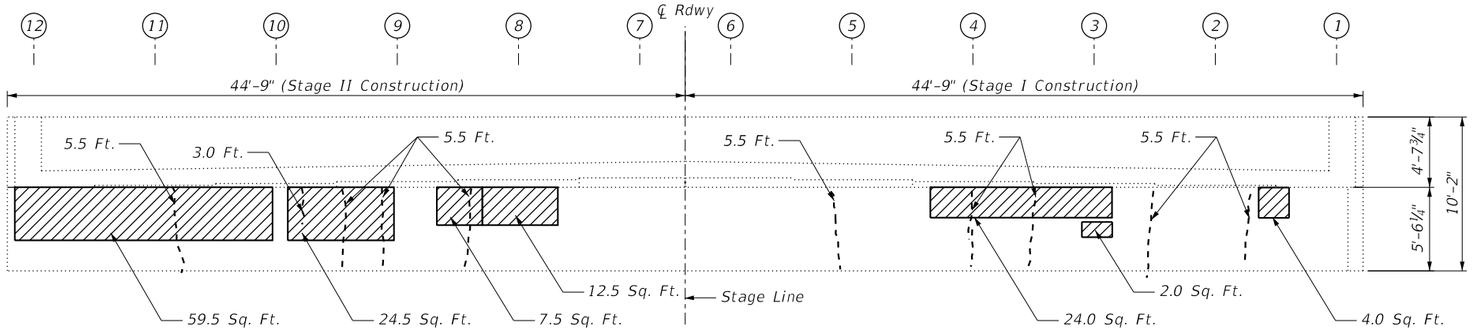

ELEVATION-WEST ABUTMENT

(Looking West)

Structural Repair of Concrete (Depth Equal to or Less Than 5 Inches)

Structural Repair of Concrete (Depth Greater Than 5 Inches)

Epoxy Crack Injection

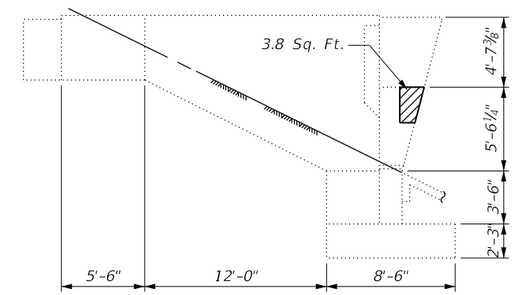

NE EXTERIOR VAULTED WALL

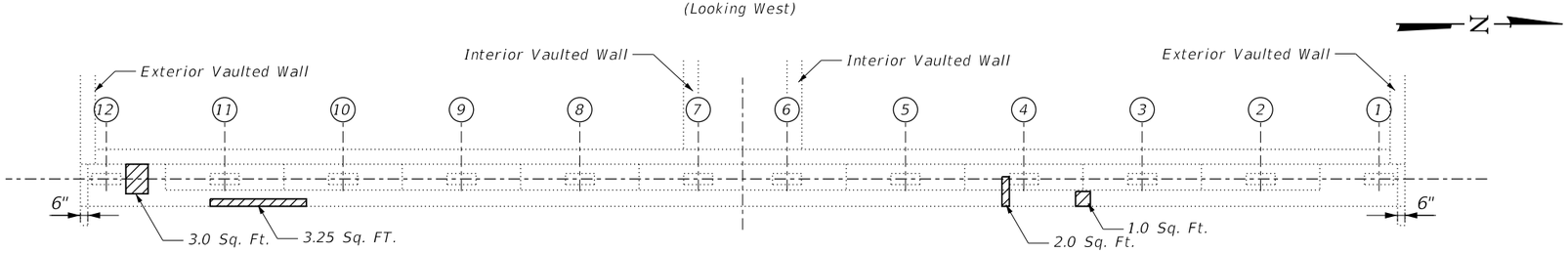

PLAN-WEST ABUTMENT

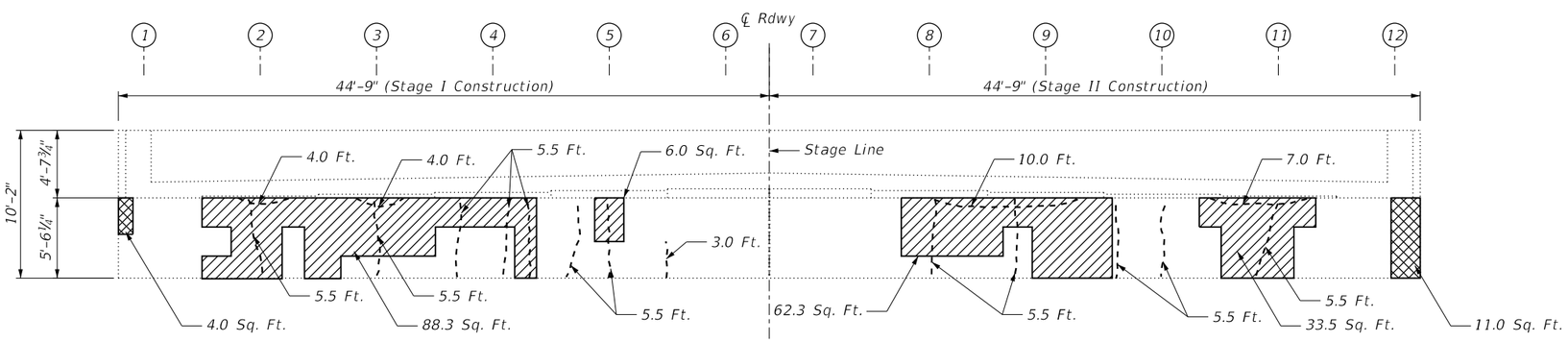

ELEVATION-EAST ABUTMENT

(Looking East)

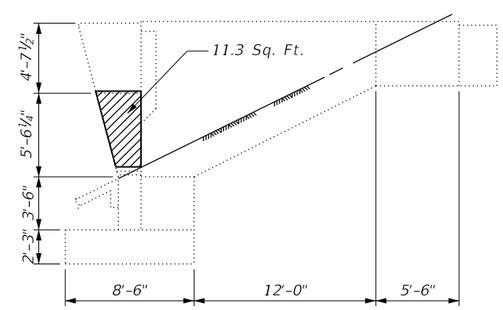

SE EXTERIOR VAULTED WALL

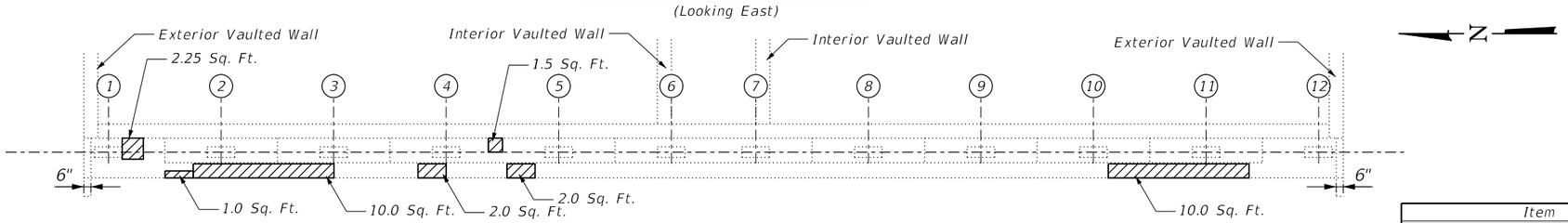

PLAN-EAST ABUTMENT

BILL OF MATERIAL

Item	Unit	Quantity
Structural Repair of Concrete (Depth Equal to or Less Than 5 Inches	Sq. Ft.	378
Structural Repair of Concrete (Depth Greater Than 5 Inches)	Sq. Ft.	15
Epoxy Crack Injection	Foot	147

MODEL: Default
FILE NAME: N:\IDOT\220628\CAD_Sheets\Structures\25-220628-Abutment.sht

CHRISTOPHER B. BURKE ENGINEERING, LTD.
9575 W. Higgins Road, Suite 600
Rosemont, Illinois 60018
(847) 823-0500

USER NAME = jjeziemy	DESIGNED - MM	REVISED -	
	DRAWN - PDR	REVISED -	
	CHECKED - CF	REVISED -	
PLOT DATE = 3/21/2025	DATE -	REVISED -	

STATE OF ILLINOIS
DEPARTMENT OF TRANSPORTATION

ABUTMENT REPAIRS
STRUCTURE NO. 071-0058

SCALE: | SHEET S-25 OF S-29 SHEETS | STA. | TO STA.

F.A.* RTE.	SECTION	COUNTY	TOTAL SHEETS	SHEET NO.
*	141-1HBR-3 & (9,10) R-3	OGLE	508	330
		CONTRACT NO. 64N98		
	ILLINOIS	FED. AID PROJECT		

*FAI ROUTE 39 (I-39) & FAP 567 (IL 38)

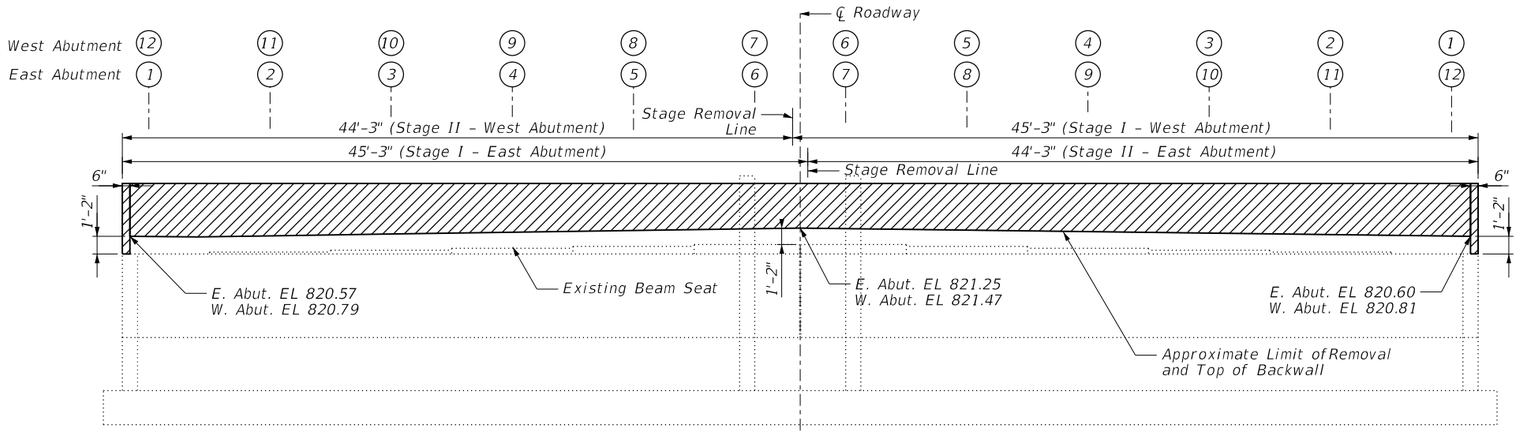

REMOVAL-ABUTMENT ELEVATION

(East abutment looking East; West abutment looking West)

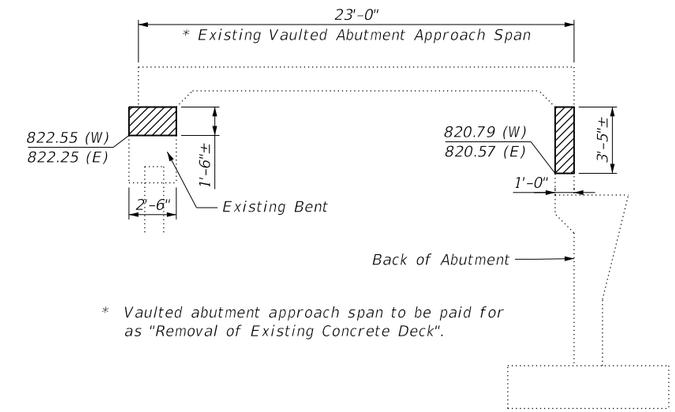

SECTION A-A

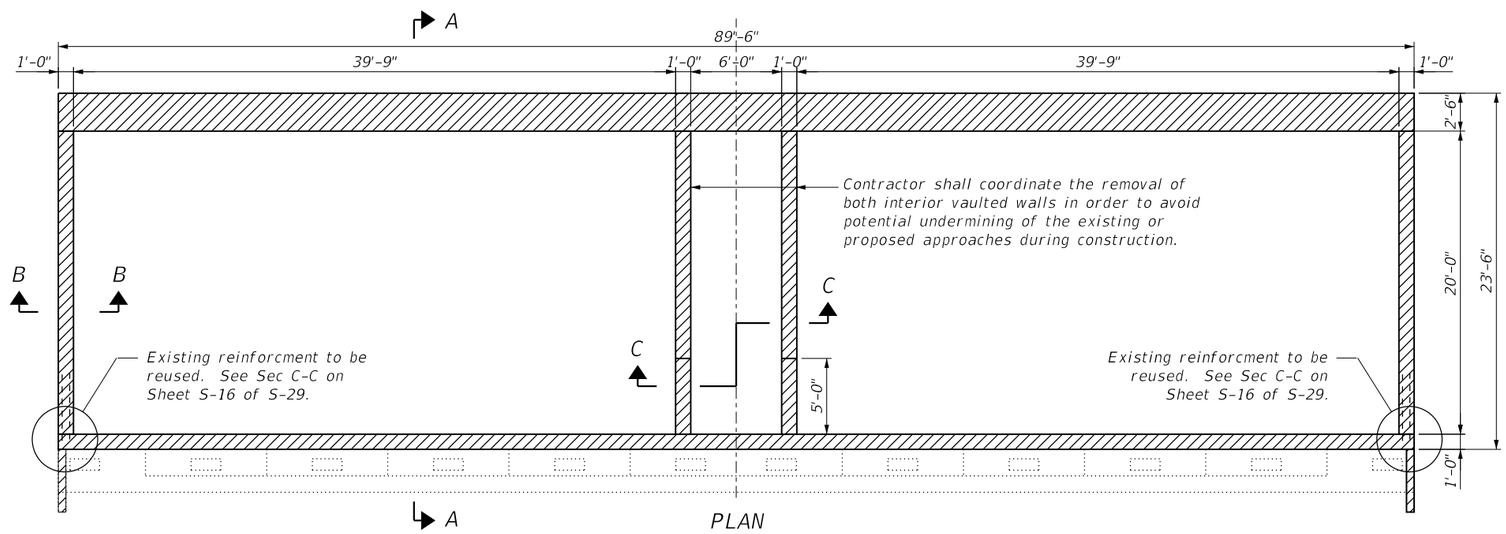

PLAN

(East abutment/walls shown; West abutment/walls mirror image)

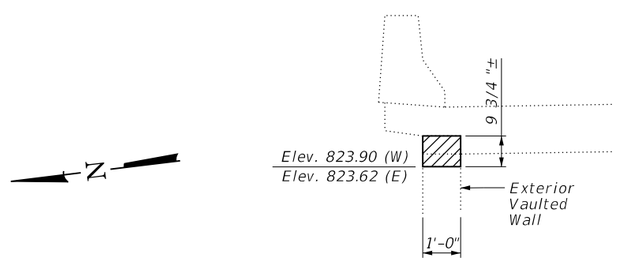

SECTION B-B

Concrete Removal

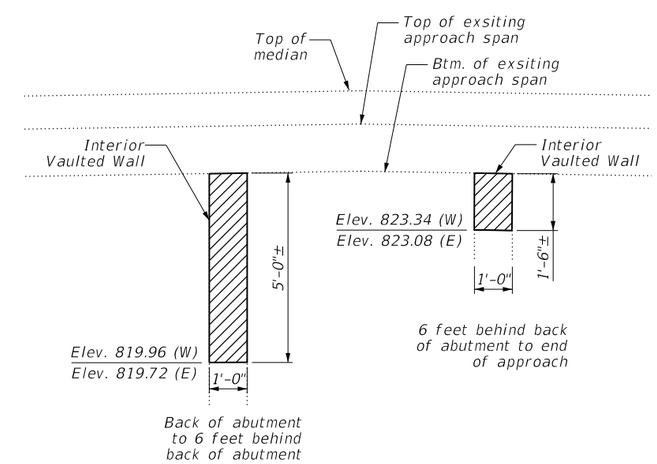

SECTION C-C

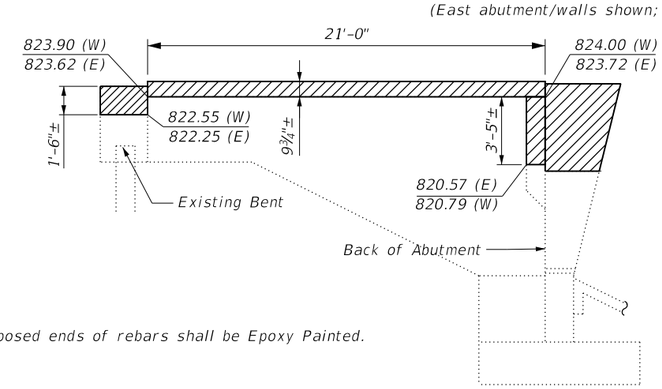

ELEVATION - EXTERIOR VAULTED WALLS

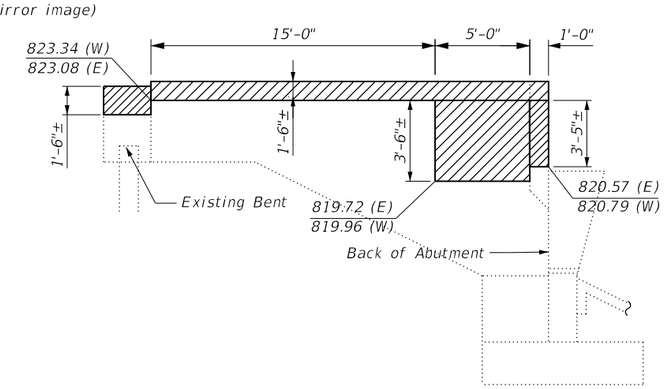

ELEVATION - INTERIOR VAULTED WALLS

NOTES:

1. The exposed ends of rebars shall be Epoxy Painted.

BILL OF MATERIAL

Item	Unit	Total
Concrete Removal	Cu. Yd.	58.2

MODEL: Default
FILE NAME: N:\IDOT\220628\CAD_Sheets\Structures\26-220628-Conc_Removal.sht

CHRISTOPHER B. BURKE ENGINEERING, LTD.
9575 W. Higgins Road, Suite 600
Rosemont, Illinois 60018
(847) 823-0500

USER NAME = jjeziemy	DESIGNED - MM	REVISED -	
	DRAWN - PDR	REVISED -	
	CHECKED - CF	REVISED -	
PLOT DATE = 3/21/2025	DATE -	REVISED -	

STATE OF ILLINOIS
DEPARTMENT OF TRANSPORTATION

CONCRETE REMOVAL
STRUCTURE NO. 071-0058

SCALE: | SHEET S-26 OF S-29 SHEETS | STA. | TO STA.

F.A.* RTE.	SECTION	COUNTY	TOTAL SHEETS	SHEET NO.
*	141-1HBR-3 & (9,10) R-3	OGLE	508	331
		CONTRACT NO. 64N98		
	ILLINOIS	FED. AID PROJECT		

*FAI ROUTE 39 (I-39) & FAP 567 (IL 38)

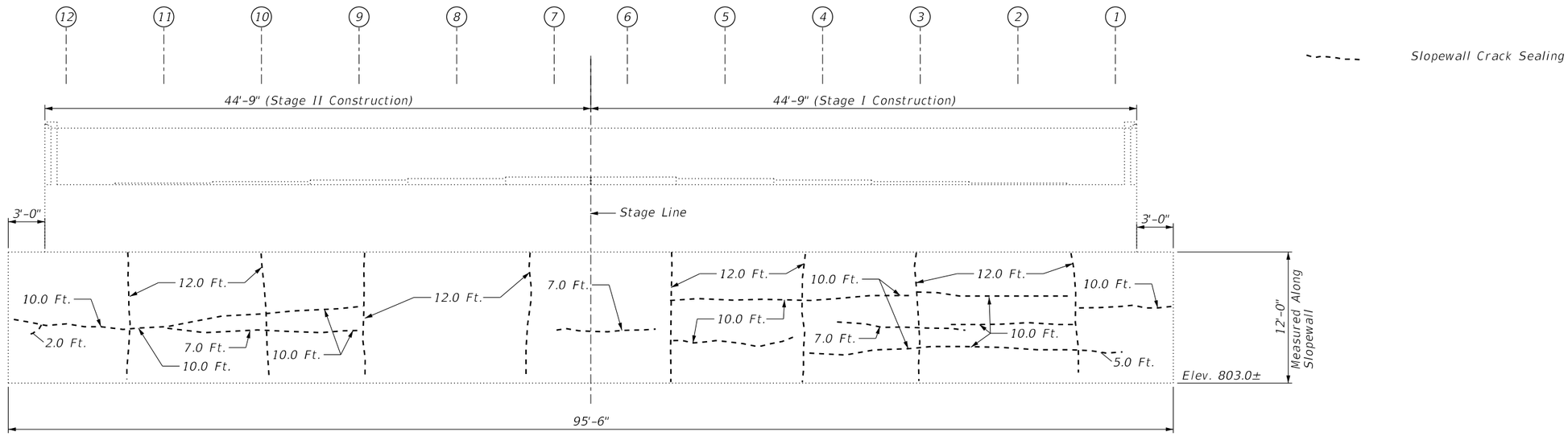

WEST ABUTMENT

(Looking West)

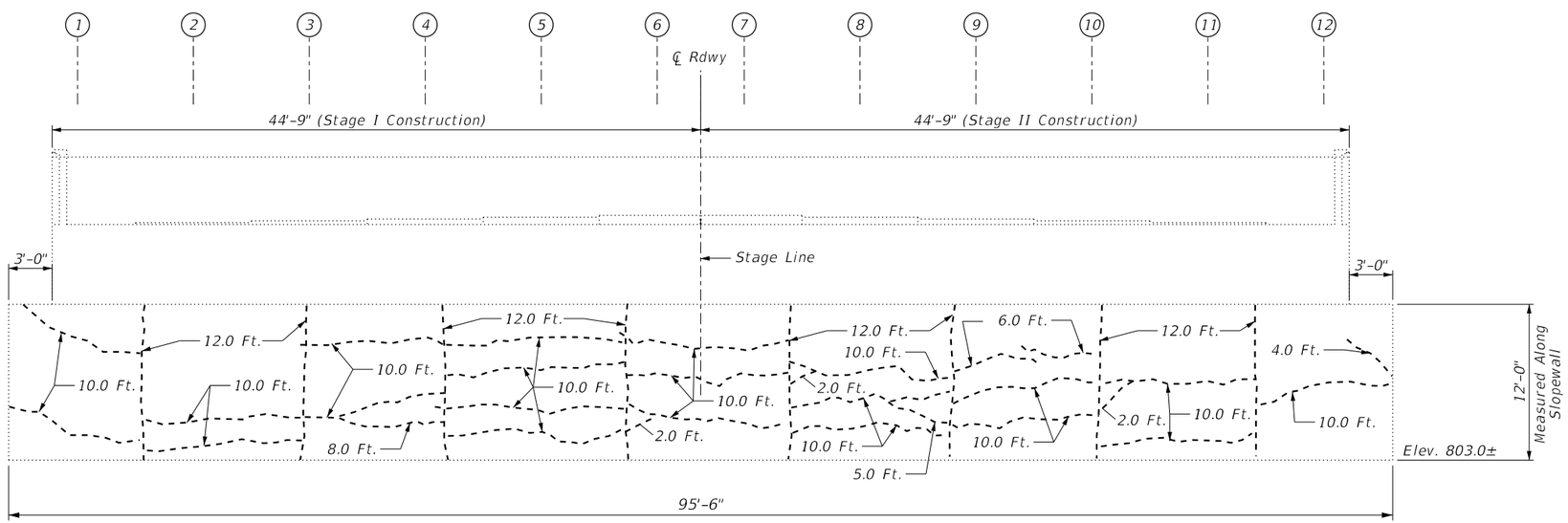

EAST ABUTMENT

(Looking East)

BILL OF MATERIAL

Item	Unit	Total
Slopewall Crack Sealing	Foot	616

MODEL: Default
FILE NAME: N:\IDOT\220628\CAD_Sheets\Structures\27-220628-Slope Wall.sht

CHRISTOPHER B. BURKE ENGINEERING, LTD.
9575 W. Higgins Road, Suite 600
Rosemont, Illinois 60018
(847) 823-0500

USER NAME = jjezierny	DESIGNED - MM	REVISED -	
	DRAWN - PDR	REVISED -	
	CHECKED - CF	REVISED -	
PLOT DATE = 3/21/2025	DATE -	REVISED -	

STATE OF ILLINOIS
DEPARTMENT OF TRANSPORTATION

SLOPE WALL REPAIRS
STRUCTURE NO. 071-0058

SCALE: | SHEET S-27 OF S-29 SHEETS | STA. | TO STA.

F.A.* RTE.	SECTION	COUNTY	TOTAL SHEETS	SHEET NO.
*	141-1HBR-3 & (9,10) R-3	OGLE	508	332
		CONTRACT NO. 64N98		
	ILLINOIS	FED. AID PROJECT		

*FAI ROUTE 39 (I-39) & FAP 567 (IL 38)

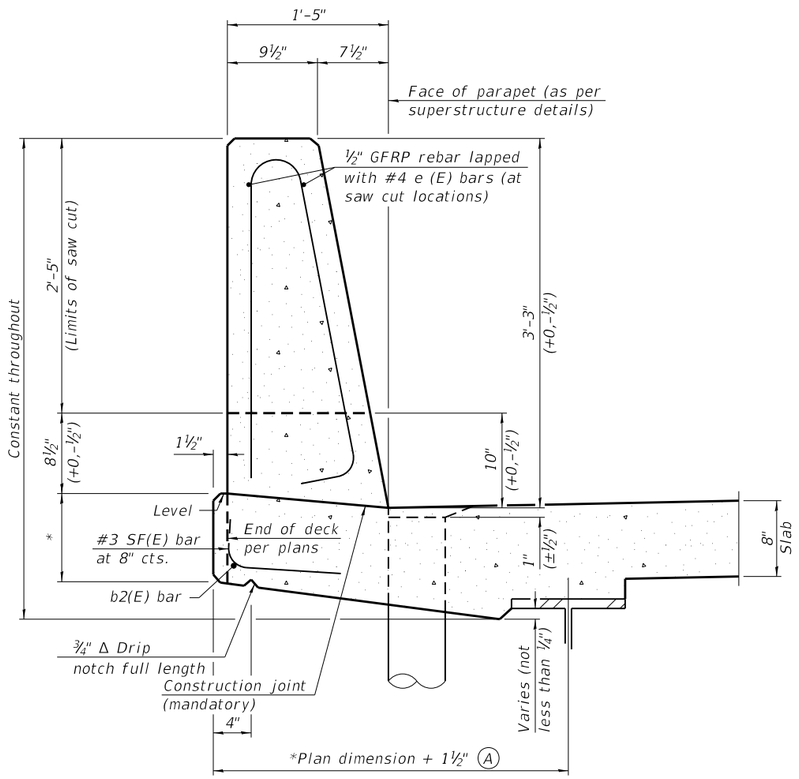

39" CONSTANT-SLOPE PARAPET SECTION

(Showing dimensions, d(E), and ½" Ø GFRP rebar)

*See Superstructure Details.

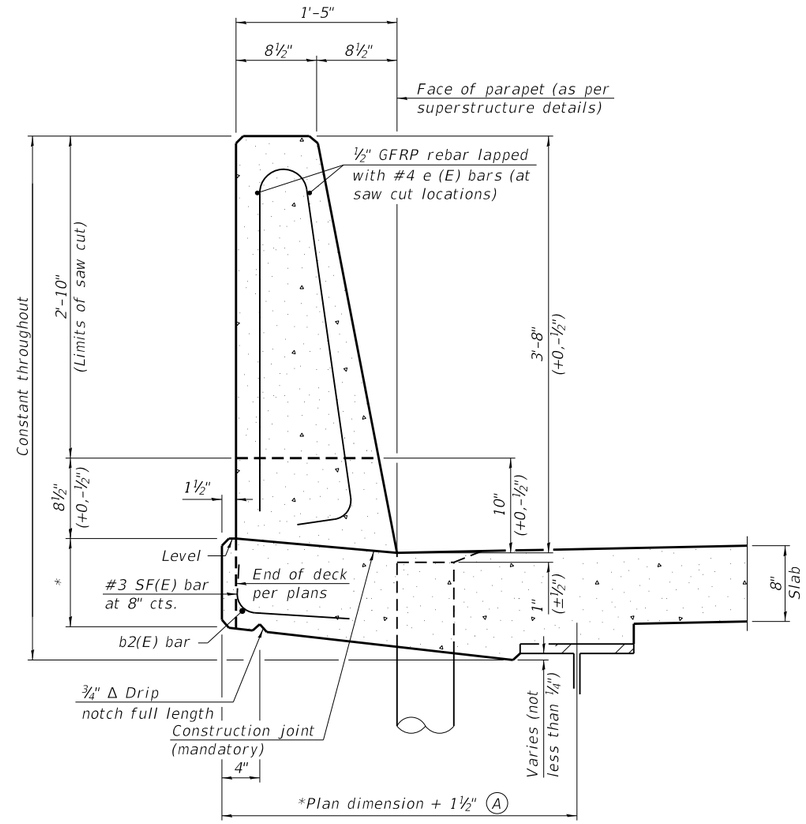

44" CONSTANT-SLOPE PARAPET SECTION

(Showing dimensions, d(E), and ½" Ø GFRP rebar)

Notes:

All dimensions shall remain the same as shown on superstructure details, except dimension A which is to be revised as shown. Additional concrete needed to revise dimension A = 0.00348 cu. yds./ft. for 39" and 44" parapets.

Place full depth aluminum sheets as shown on superstructure details.

Replace all cork joint filler locations with a full thickness saw cut.

Steel superstructure shown. Other superstructure types similar.

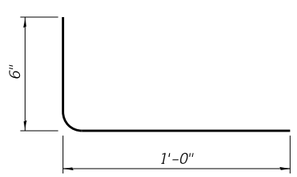

SF(E) BAR

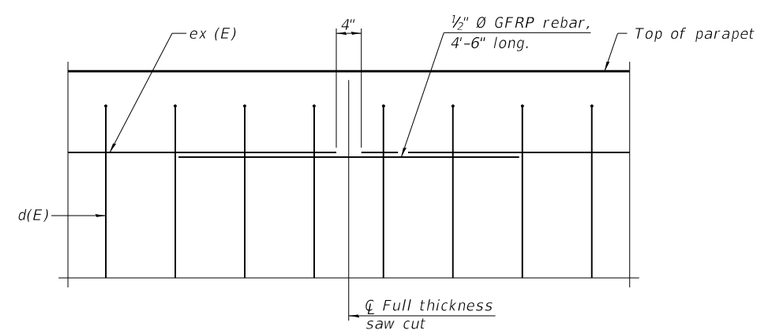

GFRP REBAR STIFFENING DETAIL

(Place as shown in parapet section at each parapet joint location.)

SFP 39-44 10/27/2023

MODEL: Default
FILE NAME: N:\IDOT\220628\CAD_Sheets\Structures\28-220628-Slipform.sht

CHRISTOPHER B. BURKE ENGINEERING, LTD.
9575 W. Higgins Road, Suite 600
Rosemont, Illinois 60018
(847) 823-0500

USER NAME = jlezierny	DESIGNED - MM	REVISED -	
	DRAWN - PDR	REVISED -	
	CHECKED - CF	REVISED -	
PLOT DATE = 3/21/2025	DATE -	REVISED -	

STATE OF ILLINOIS
DEPARTMENT OF TRANSPORTATION

CONCRETE PARAPET SLIPFORMING OPTION
STRUCTURE NO. 071-0058

SCALE: SHEET S-28 OF S-29 SHEETS STA. TO STA.

F.A.* RTE.	SECTION	COUNTY	TOTAL SHEETS	SHEET NO.
*	141-1HBR-3 & (9,10) R-3	OGLE	508	333

CONTRACT NO. 64N98

ILLINOIS FED. AID PROJECT

*FAI ROUTE 39 (I-39) & FAP 567 (IL 38)

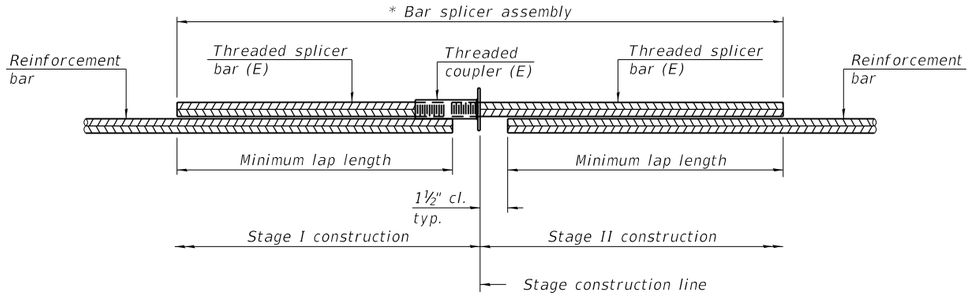

STANDARD BAR SPLICER ASSEMBLY PLAN

Only bar splicer assemblies as presented on the approved QPL list may be used.

Threaded splicer bar length = min. lap length + 1½" + thread length

* Epoxy not required on Bar Splicer Assembly components used in conjunction with black bars.

Location	Bar size	No. assemblies required	Minimum lap length
Deck	#5	458	3'-4"
Deck	#5	275	3'-4"
Approach	#5	92	3'-4"
Approach	#8	120	4'-9"
Approach Ftg.	#5	80	3'-4"

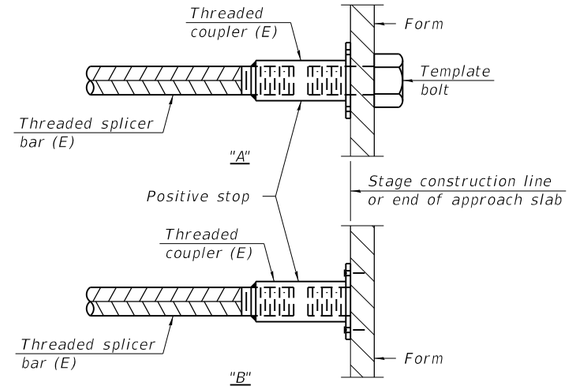

INSTALLATION AND SETTING METHODS

"A" : Set bar splicer assembly by means of a template bolt.
"B" : Set bar splicer assembly by nailing to wood forms or cementing to steel forms.
(E) : Indicates epoxy coating.

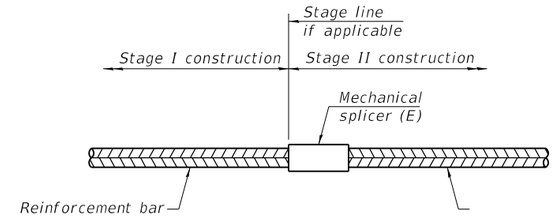

STANDARD MECHANICAL SPLICER

Location	Bar size	No. assemblies required

Notes:
Splicer bars shall be deformed with threaded ends and have a minimum 60 ksi yield strength.
All reinforcement shall be lapped and tied to the splicer bars.
Bar splicer assemblies shall be epoxy coated according to the requirements for reinforcement bars. See Section 508 of the Standard Specifications.
See approved list of bar splicer assemblies and mechanical splicers for alternatives.

BSD-1 5-15-2023

MODEL: Default
FILE NAME: N:\IDOT\220628\CAD_Sheets\Structures\29-220628-Bar Splicers.sht

CHRISTOPHER B. BURKE ENGINEERING, LTD.
9575 W. Higgins Road, Suite 600
Rosemont, Illinois 60018
(847) 823-0500

USER NAME = jjezierny	DESIGNED - MM	REVISED -	STATE OF ILLINOIS DEPARTMENT OF TRANSPORTATION
	DRAWN - PDR	REVISED -	
	CHECKED - CF	REVISED -	
PLOT DATE = 3/21/2025	DATE -	REVISED -	

BAR SPLICERS
STRUCTURE NO. 071-0058

SCALE: SHEET S-29 OF S-29 SHEETS STA. TO STA.

F.A.* RTE.	SECTION	COUNTY	TOTAL SHEETS	SHEET NO.
*	141-1HBR-3 & (9,10) R-3	OGLE	508	334
		CONTRACT NO. 64N98		
	ILLINOIS	FED. AID PROJECT		

*FAI ROUTE 39 (I-39) & FAP 567 (IL 38)

TRAFFIC SIGNAL SCHEDULE OF QUANTITIES

CODE NO.	ITEM	UNIT	TOTAL QUANTITY	IL ROUTE 38 AT DEMENT ROAD	IL ROUTE 38 AT DDI RAMPS	IL ROUTE 38 INTERCONNECT
50200400	ROCK EXCAVATION FOR STRUCTURES	CU YD	5.6	5.6		
72000100	SIGN PANEL - TYPE 1	SQ FT	267	60	207	
80500100	SERVICE INSTALLATION, TYPE A	EACH	3	1	2	
81028350	UNDERGROUND CONDUIT, PVC, 2" DIA.	FOOT	6159	329	1191	4639
81028360	UNDERGROUND CONDUIT, PVC, 2 1/2" DIA.	FOOT	499	146	353	
81028370	UNDERGROUND CONDUIT, PVC, 3" DIA.	FOOT	174	123	51	
81028380	UNDERGROUND CONDUIT, PVC, 3 1/2" DIA.	FOOT	258	135	123	
81028390	UNDERGROUND CONDUIT, PVC, 4" DIA.	FOOT	3526	451	3075	
81101001	CONDUIT ATTACHED TO STRUCTURE, RIGID NON-METALLIC, 2" DIA.	FOOT	216			216
81101002	CONDUIT ATTACHED TO STRUCTURE, RIGID NON-METALLIC, 4" DIA.	FOOT	432			432
81300948	JUNCTION BOX, STAINLESS STEEL, ATTACHED TO STRUCTURE, 24" X 24" X 10"	EACH	4			4
81400100	HANDHOLE	EACH	18	4	10	4
81400300	DOUBLE HANDHOLE	EACH	15	3	7	5
86000100	MASTER CONTROLLER	EACH	1	1		
86200300	UNINTERRUPTABLE POWER SUPPLY, EXTENDED	EACH	2		2	
86400100	TRANSCEIVER - FIBER OPTIC	EACH	3	1	2	
87300925	ELECTRIC CABLE IN CONDUIT, TRACER, NO. 14 1C	FOOT	5194			5194
87301215	ELECTRIC CABLE IN CONDUIT, SIGNAL NO. 14 2C	FOOT	11065	2970	8095	
87301225	ELECTRIC CABLE IN CONDUIT, SIGNAL NO. 14 3C	FOOT	14866	3040	11826	
87301245	ELECTRIC CABLE IN CONDUIT, SIGNAL NO. 14 5C	FOOT	45571	6299	39272	
87301255	ELECTRIC CABLE IN CONDUIT, SIGNAL NO. 14 7C	FOOT	2542	2440	102	
87301805	ELECTRIC CABLE IN CONDUIT, SERVICE, NO. 6 2 C	FOOT	294	44	250	
87301900	ELECTRIC CABLE IN CONDUIT, EQUIPMENT GROUNDING CONDUCTOR, NO. 6 1C	FOOT	8421	1757	6664	
87500600	TRAFFIC SIGNAL POST, 10 FT.	EACH	7	6	1	
87501300	TRAFFIC SIGNAL POST, 17 FT.	EACH	23	5	18	
87700120	STEEL MAST ARM ASSEMBLY AND POLE, 16 FT.	EACH	1	1		
87700240	STEEL MAST ARM ASSEMBLY AND POLE, 40 FT.	EACH	1	1		
87700280	STEEL MAST ARM ASSEMBLY AND POLE, 48 FT.	EACH	1	1		
87702840	STEEL COMBINATION MAST ARM ASSEMBLY AND POLE 22 FT.	EACH	1		1	
87702860	STEEL COMBINATION MAST ARM ASSEMBLY AND POLE 26 FT.	EACH	1		1	
87702870	STEEL COMBINATION MAST ARM ASSEMBLY AND POLE 28 FT.	EACH	1		1	
87702880	STEEL COMBINATION MAST ARM ASSEMBLY AND POLE 30 FT.	EACH	4		4	
87702890	STEEL COMBINATION MAST ARM ASSEMBLY AND POLE 32 FT.	EACH	1		1	
87702900	STEEL COMBINATION MAST ARM ASSEMBLY AND POLE 34 FT.	EACH	2	1	1	
87702920	STEEL COMBINATION MAST ARM ASSEMBLY AND POLE 38 FT.	EACH	1	1		
87702950	STEEL COMBINATION MAST ARM ASSEMBLY AND POLE 44 FT.	EACH	1	1		
87703020	STEEL COMBINATION MAST ARM ASSEMBLY AND POLE 58 FT.	EACH	1	1		
87703040	STEEL COMBINATION MAST ARM ASSEMBLY AND POLE 62 FT.	EACH	1	1		
87703120	STEEL COMBINATION MAST ARM ASSEMBLY AND POLE 75 FT.	EACH	1	1		
87800100	CONCRETE FOUNDATION, TYPE A	FOOT	90	33	57	
87800150	CONCRETE FOUNDATION, TYPE C	FOOT	9	3	6	
87800400	CONCRETE FOUNDATION, TYPE E 30-INCH DIAMETER	FOOT	42	10	32	
87800415	CONCRETE FOUNDATION, TYPE E 36-INCH DIAMETER	FOOT	127	61	66	
87800420	CONCRETE FOUNDATION, TYPE E 42-INCH DIAMETER	FOOT	45	45		
88040020	SIGNAL HEAD, POLYCARBONATE, LED, 1-FACE, 1-SECTION, BRACKET MOUNTED	EACH	3		3	
88040070	SIGNAL HEAD, POLYCARBONATE, LED, 1-FACE, 3-SECTION, BRACKET MOUNTED	EACH	24	6	18	
88040090	SIGNAL HEAD, POLYCARBONATE, LED, 1-FACE, 3-SECTION, MAST ARM MOUNTED	EACH	35	17	18	
88040110	SIGNAL HEAD, POLYCARBONATE, LED, 1-FACE, 4-SECTION, BRACKET MOUNTED	EACH	1		1	
88040120	SIGNAL HEAD, POLYCARBONATE, LED, 1-FACE, 4-SECTION, MAST ARM MOUNTED	EACH	4	4		
88040150	SIGNAL HEAD, POLYCARBONATE, LED, 1-FACE, 5-SECTION, BRACKET MOUNTED	EACH	2	2		
88040160	SIGNAL HEAD, POLYCARBONATE, LED, 1-FACE, 5-SECTION, MAST ARM MOUNTED	EACH	2	2		
88102825	PEDESTRIAN SIGNAL HEAD, POLYCARBONATE, LED, 1-FACE, BRACKET MOUNTED WITH COUNT DOWN TIMER	EACH	18	10	8	
88200510	TRAFFIC SIGNAL BACKPLATE, RETROREFLECTIVE	EACH	41	23	18	
89000100	TEMPORARY TRAFFIC SIGNAL INSTALLATION	EACH	3	1	2	
89502375	REMOVE EXISTING TRAFFIC SIGNAL EQUIPMENT	EACH	2	1	1	
89502380	REMOVE EXISTING HANDHOLE	EACH	11	5	6	
89502382	REMOVE EXISTING DOUBLE HANDHOLE	EACH	2	1	1	
89502385	REMOVE EXISTING CONCRETE FOUNDATION	EACH	12	6	6	
X0322920	COMMUNICATIONS CABINET AND EQUIPMENT	EACH	1		1	
X1400182	FULL-ACTUATED CONTROLLER AND TYPE SUPER R CABINET	EACH	2	1	1	
X1400328	AUTOMATIC TRANSFER SWITCH	EACH	1	1		
X1400481	LED INTERNALLY ILLUMINATED STREET NAME SIGN & VENDOR CABLE	EACH	4	4		
X8710024	FIBER OPTIC CABLE IN CONDUIT, NO. 62.5/125, MM12F SM24F	FOOT	5252			5252
X8760200	ACCESSIBLE PEDESTRIAN SIGNALS	EACH	18	10	8	
X8891202	WIDE AREA VIDEO VEHICLE DETECTION SYSTEM COMPLETE	EACH	3	1	2	
Z0033056	OPTIMIZE TRAFFIC SIGNAL SYSTEM	EACH	1			1
Z0073510	TEMPORARY TRAFFIC SIGNAL TIMING	EACH	24	8	16	

SCHEDULE OF POST, POLE, AND FOUNDATION QUANTITIES

REF.	LOCATION	TYPE	FOUNDATION TYPE	FOUNDATION DEPTH	STATION	OFFSET
IL ROUTE 38 AT DEMENT ROAD						
TSP-9	WEST MEDIAN	TS POST 17	CONC FDN TY A	3.0 FT	635+94.70	5.97' LT
MA-7	SOUTHWEST QUADRANT	STL COMB MAA&P 44	CONC FDN TY E 36D	13.0 FT	636+27.63	76.41' RT
MA-6	NORTHWEST QUADRANT	STL COMB MAA&P 62	CONC FDN TY E 42D	17.0 FT	636+34.31	65.71' LT
TSP-11	SOUTHWEST QUADRANT	TS POST 10	CONC FDN TY A	3.0 FT	636+40.08	84.63' RT
TSP-8	NORTHWEST QUADRANT	TS POST 17	CONC FDN TY A	3.0 FT	636+46.17	74.73' LT
MA-5	NORTHWEST QUADRANT	S MAA & P 40	CONC FDN TY E 36D	13.0 FT	636+54.76	87.30' LT
TSP-10	SOUTHWEST ISLAND	TS POST 10	CONC FDN TY A	3.0 FT	636+55.34	47.00' RT
MA-8	SOUTHWEST ISLAND	S MAA & P 48	CONC FDN TY E 36D	13.3 FT	636+69.97	44.05' RT
TSP-7	NORTHWEST ISLAND	TS POST 17	CONC FDN TY A	3.0 FT	636+72.01	45.10' LT
TSP-6	NORTHWEST ISLAND	TS POST 10	CONC FDN TY A	3.0 FT	636+83.46	56.70' LT
TSP-5	NORTHWEST ISLAND	TS POST 10	CONC FDN TY A	3.0 FT	636+85.34	44.79' LT
TSP-4	NORTHEAST ISLAND	TS POST 10	CONC FDN TY A	3.0 FT	637+62.20	50.40' LT
TSP-3	NORTHEAST ISLAND	TS POST 17	CONC FDN TY A	3.0 FT	637+72.42	64.23' LT
MA-2	SOUTHEAST QUADRANT	STL COMB MAA&P 38	CONC FDN TY E 36D	10.0 FT	637+75.92	95.48' RT
TSP-1	SOUTHEAST QUADRANT	TS POST 17	CONC FDN TY A	3.0 FT	637+91.01	74.65' RT
MA-4	NORTHEAST QUADRANT	STL COMB MAA&P 75	CONC FDN TY E 42D	14.5 FT	637+95.62	96.31' LT
TSP-2	NORTHEAST QUADRANT	TS POST 17	CONC FDN TY A	3.0 FT	638+03.32	86.35' LT
MA-1	SOUTHEAST QUADRANT	STL COMB MAA&P 58	CONC FDN TY E 42D	13.0 FT	638+18.34	61.00' RT
SERVICE	SOUTHEAST QUADRANT	WOODEN POLE	EXISTING		638+21.55	83.73' RT
MA-3	NORTHEAST QUADRANT	STL COMB MAA&P 34	CONC FDN TY E 36D	11.6 FT	638+30.79	67.57' LT
MA-9	NORTHEAST QUADRANT	S MAA & P 16	CONC FDN TY E 30D	10.0 FT	638+81.99	59.24' LT
IL ROUTE 38 AT SOUTHBOUND RAMPS						
MA-12	NORTHWEST QUADRANT	STL COMB MAA&P 34	CONC FDN TY E 36D	11.0 FT	656+94.38	64.43' LT
MA-13	WEST MEDIAN	STL COMB MAA&P 30	CONC FDN TY E 36D	11.0 FT	657+39.00	0.00' LT/RT
TSP-20	SOUTHWEST QUADRANT	TS POST 17	CONC FDN TY A	3.0 FT	657+59.24	70.44' RT
TSP-18	NORTHWEST QUADRANT	TS POST 17	CONC FDN TY A	3.0 FT	657+64.33	67.71' LT
TSP-19	SOUTH ISLAND	TS POST 17	CONC FDN TY A	3.0 FT	657+71.07	32.14' RT
SERVICE	SOUTHWEST QUADRANT	WOODEN POLE	EXISTING		657+92.73	113.90' RT
TSP-17	NORTH ISLAND	TS POST 17	CONC FDN TY A	3.0 FT	657+97.06	41.58' LT
TSP-16	NORTH ISLAND	TS POST 10	CONC FDN TY A	3.0 FT	658+19.36	29.89' LT
TSP-12	SOUTH ISLAND	TS POST 17	CONC FDN TY A	3.0 FT	658+40.13	34.68' RT
TSP-13	EAST MEDIAN	TS POST 17	CONC FDN TY A	3.0 FT	658+63.99	0.88' LT
TSP-14	NORTH ISLAND	TS POST 17	CONC FDN TY A	3.0 FT	658+70.65	45.66' LT
MA-11	EAST MEDIAN	STL COMB MAA&P 32	CONC FDN TY E 36D	11.0 FT	658+85.65	7.28' LT
TSP-15	NORTHEAST QUADRANT	TS POST 17	CONC FDN TY A	3.0 FT	658+95.65	80.79' LT
MA-10	EAST MEDIAN	STL COMB MAA&P 30	CONC FDN TY E 36D	11.0 FT	659+31.94	19.97' LT
IL ROUTE 38 AT NORTHBOUND RAMPS						
MA-17	WEST MEDIAN	STL COMB MAA&P 26	CONC FDN TY E 30D	11.0 FT	670+94.99	13.19' RT
TSP-30	SOUTHWEST QUADRANT	TS POST 17	CONC FDN TY A	3.0 FT	671+38.08	73.04' RT
TSP-28	NORTHWEST QUADRANT	TS POST 17	CONC FDN TY A	3.0 FT	671+40.06	85.76' LT
MA-18	WEST MEDIAN	STL COMB MAA&P 30	CONC FDN TY E 36D	11.0 FT	671+58.02	0.05' RT
TSP-27	NORTH ISLAND	TS POST 17	CONC FDN TY A	3.0 FT	671+62.51	48.99' LT
TSP-29	SOUTH ISLAND	TS POST 17	CONC FDN TY A	3.0 FT	671+70.04	39.43' RT
TSP-26	NORTH ISLAND	TS POST 17	CONC FDN TY A	3.0 FT	672+00.60	28.71' LT
MA-16	NORTH ISLAND	STL COMB MAA&P 28	CONC FDN TY E 30D	11.0 FT	672+30.01	77.82' LT
TSP-23	NORTH ISLAND	TS POST 17	CONC FDN TY A	3.0 FT	672+62.77	36.00' LT
TSP-21	SOUTH ISLAND	TS POST 17	CONC FDN TY A	3.0 FT	672+64.19	36.52' RT
TSP-24	NORTH ISLAND	TS POST 17	CONC FDN TY A	3.0 FT	672+65.67	47.89' LT
MA-15	EAST MEDIAN	STL COMB MAA&P 30	CONC FDN TY E 36D	11.0 FT	672+84.22	0.00' LT/RT
TSP-25	NORTHEAST QUADRANT	TS POST 17	CONC FDN TY A	3.0 FT	672+88.09	82.84' LT
TSP-22	SOUTHEAST QUADRANT	TS POST 17	CONC FDN TY A	3.0 FT	673+01.11	68.08' RT
SERVICE	SOUTHEAST QUADRANT	WOODEN POLE	EXISTING		673+34.59	77.02' RT
MA-14	EAST MEDIAN	STL COMB MAA&P 22	CONC FDN TY E 30D	10.0 FT	673+67.30	13.96' RT

SCHEDULE OF HANDHOLE QUANTITIES

REF.	LOCATION	TYPE	STATION	OFFSET
IL ROUTE 38 AT DEMENT ROAD				
HH-2	NORTHWEST QUADRANT	HANDHOLE	636+38.96	79.02' LT
HH-4	SOUTHWEST QUADRANT	HANDHOLE	636+45.31	85.87' RT
HH-1	NORTHWEST ISLAND	HANDHOLE	636+66.46	43.05' LT
HH-3	SOUTHWEST ISLAND	HANDHOLE	636+75.98	67.47' RT
DHH-3	NORTHEAST ISLAND	DBL HANDHOLE	637+70.96	49.04' LT
DHH-1	SOUTHEAST QUADRANT	DBL HANDHOLE	638+03.28	71.63' RT
DHH-2	NORTHEAST QUADRANT	DBL HANDHOLE	638+19.65	79.20' LT
IL ROUTE 38 AT SOUTHBOUND RAMPS				
HH-11	NORTHWEST QUADRANT	HANDHOLE	657+36.66	60.06' LT
DHH-6	WEST MEDIAN	DBL HANDHOLE	657+38.99	4.27' RT
HH-12	SOUTHWEST QUADRANT	HANDHOLE	657+69.14	70.81' RT
DHH-5	NORTH ISLAND	DBL HANDHOLE	657+70.10	30.68' LT
DHH-4	SOUTH ISLAND	DBL HANDHOLE	658+26.33	30.96' RT
HH-10	NORTH ISLAND	HANDHOLE	658+60.84	53.51' LT
HH-8	EAST MEDIAN	HANDHOLE	658+76.60	7.76' RT
HH-9	NORTHEAST QUADRANT	HANDHOLE	658+87.55	89.19' LT
IL ROUTE 38 AT NORTHBOUND RAMPS				
HH-16	NORTHWEST QUADRANT	HANDHOLE	671+49.75	88.22' LT
HH-17	SOUTHWEST QUADRANT	HANDHOLE	671+60.18	79.89' RT
DHH-14	WEST MEDIAN	DBL HANDHOLE	671+65.42	1.04' RT
DHH-12	SOUTH ISLAND	DBL HANDHOLE	672+13.32	42.38' RT
DHH-13	NORTH ISLAND	DBL HANDHOLE	672+23.83	21.26' LT
HH-14	EAST MEDIAN	HANDHOLE	672+78.77	0.03' RT
HH-15	NORTHEAST QUADRANT	HANDHOLE	672+80.72	84.46' LT
HH-13	SOUTHEAST QUADRANT	HANDHOLE	672+85.91	66.42' RT

SCHEDULE OF SIGNAL HEAD QUANTITIES

QTY.	UNIT	ITEM	SIGNAL#
IL ROUTE 38 AT DEMENT ROAD			
6	EACH	SH P LED 1F 3S BM	5, 14, 19, 24, 25, 28
17	EACH	SH P LED 1F 3S MAM	2, 3, 4, 6, 7, 11, 12, 13, 16, 17, 18, 21, 22, 27, 29, 30, 31
4	EACH	SH P LED 1F 4S MAM	1, 8, 23, 26
2	EACH	SH P LED 1F 5S BM	10, 15
2	EACH	SH P LED 1F 5S MAM	9, 20
10	EACH	PED SH P LED 1F BM CT	
23	EACH	TS BACKPLATE RET-REFL	1, 2, 3, 4, 6, 7, 8, 9, 11, 12, 13, 16, 17, 18, 20, 21, 22, 23, 26, 27, 29, 30, 31
IL ROUTE 38 AT SOUTHBOUND RAMPS			
1	EACH	SH P LED 1F 1S BM	47
7	EACH	SH P LED 1F 3S BM	34, 35, 38, 39, 40, 45, 48
8	EACH	SH P LED 1F 3S MAM	32, 33, 36, 37, 41, 42, 43, 44
1	EACH	SH P LED 1F 4S BM	46
4	EACH	PED SH P LED 1F BM CT	
8	EACH	TS BACKPLATE RET-REFL	32, 33, 36, 37, 41, 42, 43, 44
IL ROUTE 38 AT NORTHBOUND RAMPS			
2	EACH	SH P LED 1F 1S BM	61, 62
10	EACH	SH P LED 1F 3S BM	53, 54, 55, 56, 59, 64, 66, 68, 69, 70
10	EACH	SH P LED 1F 3S MAM	49, 50, 51, 52, 57, 58, 62, 63, 65, 66
4	EACH	PED SH P LED 1F BM CT	
10	EACH	TS BACKPLATE RET-REFL	49, 50, 51, 52, 57, 58, 62, 63, 65, 66

ELECTRICAL GENERAL NOTES

1. ALL SIGNAL HEADS SHALL HAVE 12" SECTIONS. SIDE OF POLE MOUNTING HARDWARE SHALL BE YELLOW POLYCARBONATE UNPAINTED ALUMINUM. ALL BOLTS, SCREWS, NUTS, AND WASHERS SHALL BE STAINLESS STEEL. ANTI-SEIZE PASTE COMPOUND SHALL BE USED ON ALL MOUNTING HARDWARE CONNECTIONS.
2. BACKPLATES SHALL BE ABS PLASTIC, POLYCARBONATE, LOUVERED FORMED BACKPLATES WITH FLUORESCENT YELLOW SHEETING.
3. THE LOCATION OF MAST ARM SUPPORTS SHALL BE APPROVED BY THE ENGINEER BEFORE FOUNDATIONS ARE CONSTRUCTED. MAST ARM POLES SHALL BE LOCATED A MINIMUM OF 10 FEET FROM THE EDGE OF PAVEMENT OR 2 FEET FROM THE EDGE OF SHOULDER, WHICHEVER DISTANCE IS GREATER. IN CURBED SECTION, THE MAST ARM POLES SHALL BE LOCATED A MINIMUM OF 5 FEET FROM THE FACE OF THE CURB. THESE DISTANCES ARE TO THE NEAR FACE OF THE MAST ARM POLE.
4. ALL TRAFFIC SIGNAL CABLES SHALL BE # 14 A.W.G. SOLID COPPER UNLESS OTHERWISE SPECIFIED.
5. ALL HANDHOLE'S SHALL BE CAST-IN-PLACE PORTLAND CEMENT CONCRETE (PER ARTICLE 814.03). THE CAST-IN-PLACE LEGEND IN THE COVER SHALL BE "TRAFFIC SIGNALS". SLOPE HANDHOLE COVERS TO MATCH PROPOSED GRADE ELEVATIONS. HANDHOLE LIDS SHALL OPEN SO THAT YOU ARE FACING THE ROAD.
6. GROUND WIRES SHALL BE TYPE XLP, NO. 6 A.W.G., STRANDED COPPER, GREEN COLOR CODED AND IN ACCORDANCE WITH STANDARD 873001 AND SECTION 873 OF THE STANDARD SPECIFICATIONS.
7. PROPOSED CONTROLLER EQUIPMENT SHALL BE COMPATIBLE WITH EXISTING DISTRICT MOBOTREX TRAFFIC SIGNAL EQUIPMENT MONITORING EQUIPMENT AND SOFTWARE.
8. CONDUIT SPLICES WILL NOT BE PAID FOR SEPARATELY, BUT SHALL BE CONSIDERED PART OF THE NEW CONDUIT INSTALLATION.
9. THE LOCATION OF SIGNAL HEADS ON MAST ARMS SHALL BE APPROVED BY THE ENGINEER BEFORE MAST ARMS ARE INSTALLED.
10. HDPE COILABLE CONDUIT MEETING REQUIREMENTS OF SECTION 810 MAY BE SUBSTITUTED FOR PVC CONDUITS.
11. ALL TRAFFIC SIGNAL WIRING SHALL EXTEND FROM CONTROLLER TO SIGNAL. SPLICES IN HANHOLES AND JUNCTION BOXES WILL NOT BE ALLOWED.
12. ALL VEHICLE AND PEDESTRIAN SIGNAL HEADS SHALL HAVE POLYCARBONATE YELLOW HOUSING AND POLYCARBONATE BRACKETS.
13. THE ELEVATION OF THE TOP OF THE DOUBLE HANDHOLE SHALL BE LESS THAN THE ELEVATION OF THE TOP OF THE CONTROLLER FOUNDATION. THE DOUBLE HANHOLES INSTALLED CLOSE TO THE ROADWAY SHALL OPEN UP TOWARDS THE ROADWAY SO THE ELECTRICAL MAINTAINER IS NOT EXPOSED TO TRAFFIC WHEN WORKING.
14. ALL UTILITIES SHALL BE LOCATED IN THE FIELD PRIOR TO ANY ATTEMPT TO CONSTRUCT ANY COMPONENT OF THE VARIOUS TRAFFIC SIGNAL INSTALLATIONS.
15. THE LOCATION OF EXISTING UTILITIES AS SHOWN ON THE PLANS HAVE BEEN LOCATED AT THE TIME OF SURVEY, OR BASED ON AVAILABLE EXISTING INFORMATION. NO GUARANTEE IS IMPLIED THAT ALL UTILITIES HAVE BEEN LOCATED OR DEPICTED ON THE PLANS. THE CONTRACTOR SHALL BE RESPONSIBLE FOR VERIFYING THE EXACT LOCATION OF ALL UTILITIES. IT MAY BE NECESSARY TO HAND DIG TEST HOLES TO EXPOSE EXISTING UTILITIES AT SOME LOCATIONS.
16. SIGN SHEETING FOR MAST ARM SIGNS SHALL BE TYPE ZZ SHEETING.
17. THE CONTRACTOR SHALL BE RESPONSIBLE TO LOCATE ALL EXISTING AND PROPOSED ELECTRICAL FACILITIES.

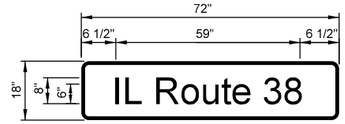

A

FURNISH & INSTALL SIX (6) EACH SIGN

DETAIL OF
SIGN PANEL - TYPE 1
(NOT TO SCALE)

COLOR	LEGEND AND BORDER	WHITE	REFLECTORIZED
	BACKGROUND	GREEN	REFLECTORIZED
SERIES	D 2000		
SIZE	8/6		

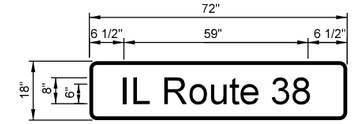

B

FURNISH & INSTALL TWO (2) EACH SIGN

DETAIL OF
INTERNALLY ILLUMINATED STREET NAME SIGN
(NOT TO SCALE)

COLOR	LEGEND AND BORDER	WHITE	REFLECTORIZED
	BACKGROUND	GREEN	REFLECTORIZED
SERIES	D 2000		
SIZE	8/6		

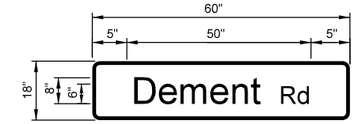

C

FURNISH & INSTALL TWO (2) EACH SIGN

DETAIL OF
INTERNALLY ILLUMINATED STREET NAME SIGN
(NOT TO SCALE)

COLOR	LEGEND AND BORDER	WHITE	REFLECTORIZED
	BACKGROUND	GREEN	REFLECTORIZED
SERIES	D 2000		
SIZE	8/6		

R3-3
36" x 36"

D

FURNISH & INSTALL FIVE (5) EACH SIGN

DETAIL OF
SIGN PANEL - TYPE 1
(NOT TO SCALE)

R10-11b
36" x 36"

E

FURNISH & INSTALL FIVE (5) EACH SIGN

DETAIL OF
SIGN PANEL - TYPE 1
(NOT TO SCALE)

R10-11b
24" x 24"

F

FURNISH & INSTALL TEN (10) EACH SIGN

DETAIL OF
SIGN PANEL - TYPE 1
(NOT TO SCALE)

R10-12a
30" x 36"

G

FURNISH & INSTALL FOUR (4) EACH SIGN

DETAIL OF
SIGN PANEL - TYPE 1
(NOT TO SCALE)

R10-5
30" x 36"

H

FURNISH & INSTALL FOUR (4) EACH SIGN

DETAIL OF
SIGN PANEL - TYPE 1
(NOT TO SCALE)

R10-3e
9" x 15"

I

FURNISH & INSTALL FIFTEEN (15) EACH SIGN

DETAIL OF
SIGN PANEL - TYPE 1
(NOT TO SCALE)

R10-3e
9" x 15"

J

FURNISH & INSTALL THREE (3) EACH SIGN

DETAIL OF
SIGN PANEL - TYPE 1
(NOT TO SCALE)

R5-1
36" x 36"

K

FURNISH & INSTALL ONE (1) EACH SIGN

DETAIL OF
SIGN PANEL - TYPE 1
(NOT TO SCALE)

MODEL: Default
FILE NAME: N:\IDOT\220628\CAD_Sheets\Traffic\D284N98-TS-Sign detail_Sht-01.dgn

CHRISTOPHER B. BURKE ENGINEERING, LTD.
9575 W. Higgins Road, Suite 600
Rosemont, Illinois 60018
(847) 823-0500

USER NAME = nhowellilindgren	DESIGNED - BC	REVISED -	
	DRAWN - FPB	REVISED -	
	CHECKED - GMZ	REVISED -	
PLOT DATE = 2/6/2025	DATE -	REVISED -	

STATE OF ILLINOIS
DEPARTMENT OF TRANSPORTATION

TRAFFIC SIGNAL GENERAL NOTES AND SIGNS
IL ROUTE 38 AND DEMENT ROAD
IL ROUTE 38 AND I-39 DDI

SCALE: 1:40 | SHEET OF SHEETS | STA. TO STA.

F.A.P. RTE.	SECTION	COUNTY	TOTAL SHEETS	SHEET NO.
567	141-1HBR-3 & (9,10) R-3	OGLE	508	337
		CONTRACT NO. 64N98		
		ILLINOIS	FED. AID PROJECT	

LEGEND:

R	REMOVE ITEM
A	ABANDON ITEM
RCF	CONTROLLER AND CABINET TO BE REMOVED
RMF	MAST ARM POLE AND FOUNDATION TO BE REMOVED
RPF	SIGNAL POST AND FOUNDATION TO BE REMOVED
	EXISTING CONDUIT
	EXISTING HANDHOLE
	EXISTING DOUBLE HANDHOLE
	EXISTING CONTROLLER CABINET
	EXISTING DETECTOR LOOP
	EXISTING SIGNAL HEAD WITH BACKPLATE
	EXISTING SIGNAL HEAD WITHOUT BACKPLATE
	EXISTING SIGN
	EXISTING STEEL COMBINATION MAST ARM ASSEMBLY AND POLE WITH LUMINAIRE (LENGTH SPECIFIED)
	EXISTING LUMINAIRE
	EXISTING SERVICE POLE

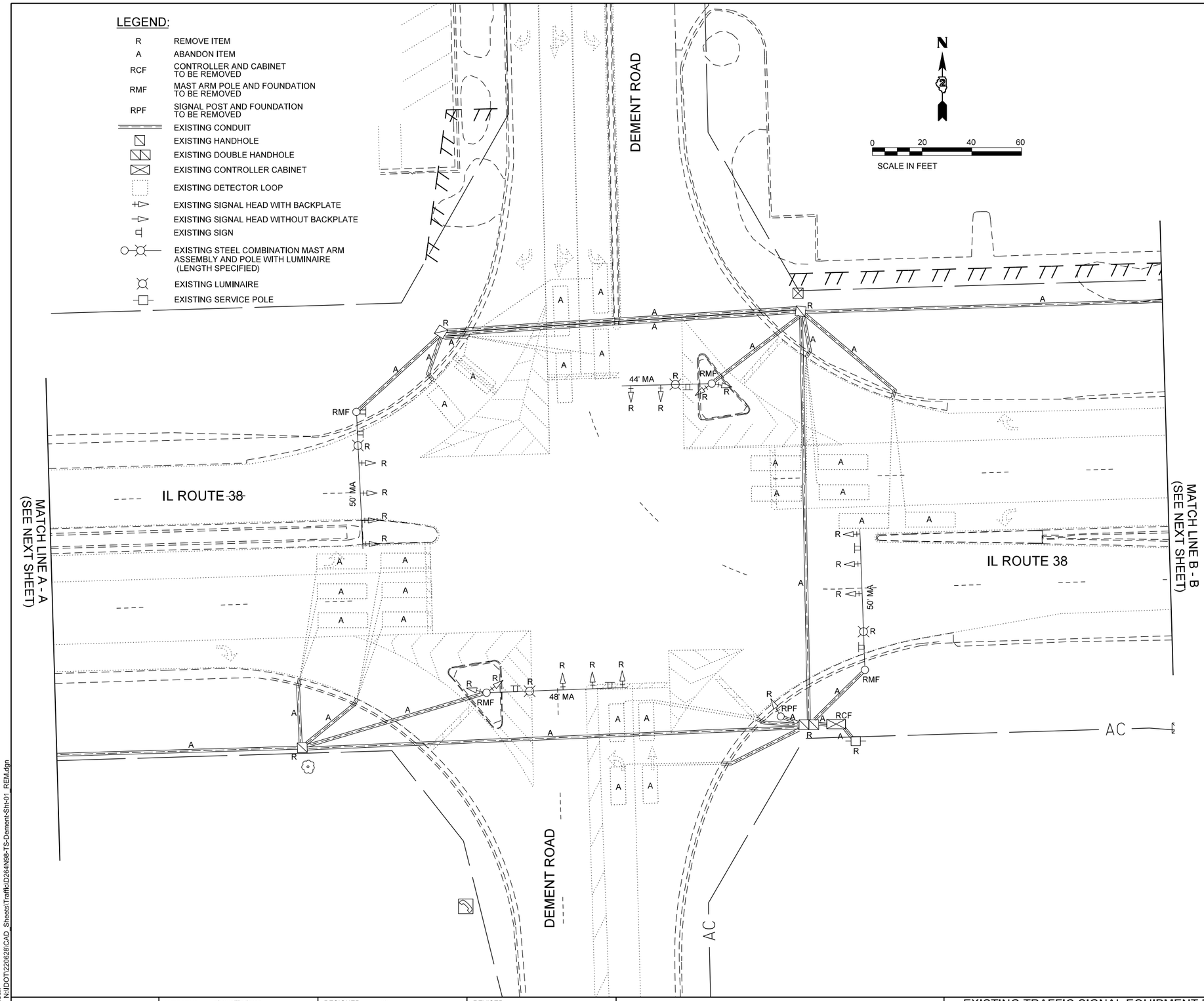

REMOVAL NOTES:

THE FOLLOWING ITEMS SHALL BE REMOVED BY THE CONTRACTOR AND SHALL BE DISPOSED OF BY THEM OUTSIDE THE RIGHT-OF-WAY AT THEIR EXPENSE. THE SALVAGE VALUE OF THE REMOVED EQUIPMENT SHALL BE REFLECTED IN THE CONTRACT BID PRICE.

1	EACH	CONTROLLER AND CABINET (COMPLETE)
4	EACH	COMBINATION MAST ARM ASSEMBLY AND POLE
1	EACH	TRAFFIC SIGNAL POST
8	EACH	3-SECTION SIGNAL HEAD
3	EACH	4-SECTION SIGNAL HEAD
6	EACH	5-SECTION SIGNAL HEAD
1	EACH	SERVICE INSTALLATION
17	EACH	TRAFFIC SIGNAL BACKPLATE
4	EACH	LUMINAIRE

GENERAL SIGNAL NOTES:

1. BEFORE STARTING ANY EXCAVATION, THE CONTRACTOR SHALL CALL "J.U.L.I.E." AT (800)-892-0123 OR 811 FOR FIELD LOCATIONS OF BURIED UTILITIES, 48-HOUR NOTIFICATION IS REQUIRED.

2. THE CONTRACTOR SHALL CONTACT THE TRAFFIC CONTROL SUPERVISOR AT 72-HOURS IN ADVANCE OF BEGINNING WORK.

3. IT SHALL BE THE CONTRACTOR'S RESPONSIBILITY TO VERIFY ALL DIMENSIONS AND CONDITIONS EXISTING IN THE FIELD PRIOR TO ORDERING MATERIALS AND BEGINNING CONSTRUCTION. THIS SHALL INCLUDE LOCATING THE MAST ARM FOUNDATIONS AND VERIFYING THE MAST ARM LENGTHS.

4. THE EXACT LOCATION OF ALL UTILITIES SHALL BE FIELD VERIFIED BY THE CONTRACTOR BEFORE ORDERING ANY MATERIALS AND STARTING ANY WORK. FOR LOCATIONS OF UTILITIES, LOCALLY OWNED EQUIPMENT, LEASED ENFORCEMENT CAMERA SYSTEM FACILITIES, AND IDOT UNDERGROUND FACILITIES, THE CONTRACTOR SHALL CONTACT THE LOCATION COUNTIES, MUNICIPALITIES, AND IDOT FOR LOCATES. THE CONTRACTOR SHALL BE RESPONSIBLE FOR LOCATING IDOT FACILITITES. THE CONTRACTOR SHALL CALL "J.U.L.I.E." AT (800)892-0123.

5. IF THE CONTRACT REQUIRES THE SERVICES OF AN ELECTRICAL CONTRACTOR, THE CONTRACTOR SHALL BE RESPONSIBLE AT HIS/HER OWN EXPENSE FOR LOCATING EXISTING IDOT ELECTRICAL FACILITIES PRIOR TO PERFORMING ANY WORK. IF THIS CONTRACT DOES NOT REQUIRE THE SERVICES OF AN ELECTRICAL CONTRACTOR, THE CONTRACTOR MAY REQUEST ON FREE LOCATE FOR EXISTING IDOT ELECTRICAL FACILITIES FROM THE DISTRICT TWO ELECTRICAL MAINTENANCE CONTRACTOR PRIOR TO THE START OF ANY WORK. ADDITIONAL REQUESTS MAY BE AT THE EXPENSE OF THE CONTRACTOR. THE LOCATION OF UNDERGROUND TRAFFIC FACILITIES DOES NOT RELIEVE THE CONTRACTOR OF THEIR RESPONSIBILITY TO REPAIR ANY FACILITIES DAMAGES DURING CONSTRUCTION AT THEIR EXPENSE.

6. THE CONTRACTOR SHALL CHECK THE PROPOSED TRAFFIC SIGNAL EQUIPMENT LOCATIONS FOR UNDERGROUND AND OVERHEAD UTILITY CONFLICTS. THE CONTRACTOR SHALL NOTIFY THE AREA ENGINEER, THE RESIDENT ENGINEER AND ANY IMPACTED UTILITY COMPANY OF THE CONFLICT AND SHALL COORDINATE AND RESOLVE THE ISSUE PRIOR TO ORDERING MATERIALS, AND PRIOR TO POURING FOUNDATIONS.

7. THE CONTRACTOR SHALL COORDINATE CONSTRUCTION ACTIVITIES WITH UTILITY COMPANIES, LOCAL GOVERNMENT AGENCIES, AND IDOT.

8. RESTORATION OF THE TRAFFIC SIGNAL WORK AREA SHALL BE INCLUDED IN THE RELATED PAY ITEMS SUCH AS FOUNDATION, CONDUIT, HANDHOLE, ETC., AND NO EXTRA COMPENSATION SHALL BE ALLOWED. ALL ROADWAY SURFACES SUCH AS SHOULDERS, MEDIAN, SIDEWALKS, PAVEMENT, ETC. SHALL BE REPLACED IN KIND. ALL DAMAGE TO MOWED LAWN SHALL BE REPLACED WITH AN APPROVED SOD, AND ALL DAMAGE TO UNMOWED FIELDS SHALL BE SEEDED IN ACCORDANCE WITH STANDARD SPECIFICATIONS 252 AND 250 RESPECTIVELY.

9. PARTIAL PAYMENT AS DESCRIBED IN ARTICLE 109.07(b) OF THE STANDARD SPECIFICATIONS WILL NOT BE ALLOWED FOR ITEMS INCLUDED IN THIS CONTRACT.

10. LOCATION WITH PEDESTRIAN EQUIPMENT HAVE BEEN DESIGNED TO BE ADA COMPLIANT. ANY DEVIATIONS FROM THE PLANS FOR TRAFFIC SIGNAL MAST ARM/POSTS THAT HAVE PEDESTRIAN EQUIPMENT WILL HAVE TO BE APPROVED BY THE ENGINEER TO ENSURE ADA COMPLIANCE.

11. CONTACT SCOTT KULLERSTRAND - IDOT BUREAU OF OPERATIONS (815)284-5468, TWO WEEKS IN ADVANCE TO DISCUSS PROPOSED CONSTRUCTION OF TRAFFIC SIGNALS AND TO ASSIST WITH SIGNAL TIMINGS.

MODEL: Default
FILE NAME: N:\IDOT\220628\CAD_Sheets\Traffic\D284N98-TS-Dement-Sht-01_REM.dgn

CHRISTOPHER B. BURKE ENGINEERING, LTD.
9575 W. Higgins Road, Suite 600
Rosemont, Illinois 60018
(847) 823-0500

USER NAME = nhowellilindgren	DESIGNED - BC	REVISED -	
	DRAWN - FPB	REVISED -	
	CHECKED - GMZ	REVISED -	
PLOT DATE = 2/6/2025	DATE -	REVISED -	

STATE OF ILLINOIS
DEPARTMENT OF TRANSPORTATION

EXISTING TRAFFIC SIGNAL EQUIPMENT REMOVAL PLAN
IL ROUTE 38 AND DEMENT ROAD
(SHEET 1 OF 2)

SCALE: 1:40 | SHEET OF SHEETS | STA. TO STA.

F.A.P. RTE.	SECTION	COUNTY	TOTAL SHEETS	SHEET NO.
567	141-1HBR-3 & (9,10) R-3	OGLE	508	338
		CONTRACT NO. 64N98		
		ILLINOIS	FED. AID PROJECT	

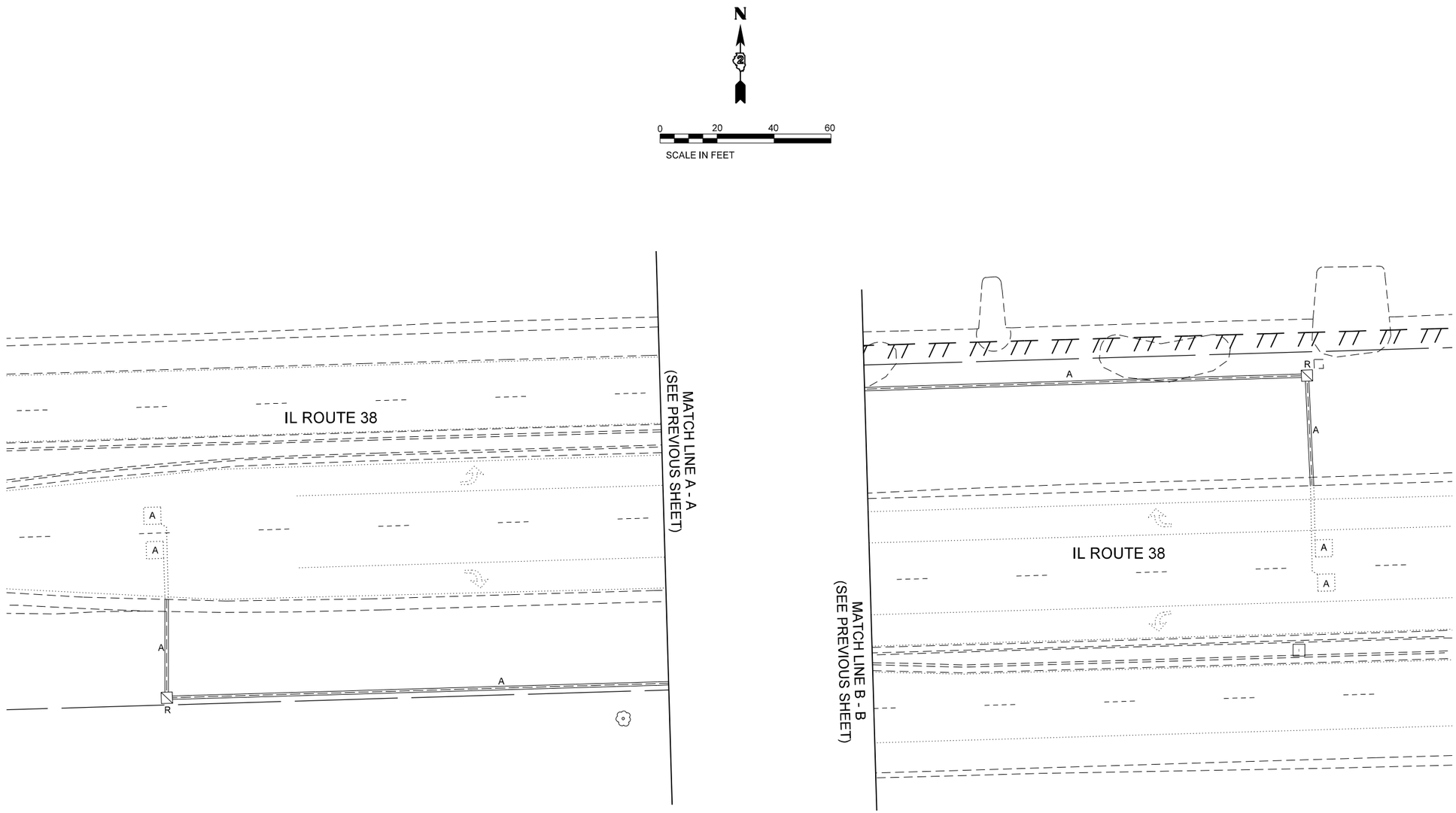

MODEL: Default
FILE NAME: N:\IDOT\220628\CAD_Sheets\Traffic\D284N98-TS-Dement-Sht-02_REM.dgn

CHRISTOPHER B. BURKE ENGINEERING, LTD.
9575 W. Higgins Road, Suite 600
Rosemont, Illinois 60018
(847) 823-0500

USER NAME = nhowellilindgren	DESIGNED - BC	REVISED -	
	DRAWN - FPB	REVISED -	
	CHECKED - GMZ	REVISED -	
PLOT DATE = 2/6/2025	DATE -	REVISED -	

STATE OF ILLINOIS
DEPARTMENT OF TRANSPORTATION

EXISTING TRAFFIC SIGNAL EQUIPMENT REMOVAL PLAN
IL ROUTE 38 AND DEMENT ROAD
(SHEET 2 OF 2)

SCALE: 1:40 | SHEET OF SHEETS | STA. TO STA.

F.A.P. RTE.	SECTION	COUNTY	TOTAL SHEETS	SHEET NO.
567	141-1HBR-3 & (9,10) R-3	OGLE	508	339

CONTRACT NO. 64N98

ILLINOIS | FED. AID PROJECT

TEMPORARY TRAFFIC SIGNAL LEGEND

- TEMPORARY SIGNAL CONTROLLER
- TEMPORARY SERVICE INSTALLATION
- TEMPORARY SIGNAL HEAD
- TEMPORARY WOOD POLE (CLASS 5 OR BETTER) 45' MIN.
- TEMPORARY SPAN WIRE, TETHER WIRE AND CABLE
- GUY WIRE
- TEMPORARY VIDEO DETECTION CAMERA
- TEMPORARY LED LUMINAIRE
- VIDEO DETECTION

MOT EXISTING CONDITION

N

0 20 40 60
SCALE IN FEET

TEMPORARY WOOD POLE
APPROX. STA. 637+83.0, 124.8' LT

TEMPORARY WOOD POLE
APPROX. STA. 638+12.8, 92.1' LT

TEMPORARY WOOD POLE
APPROX. STA. 636+31.5, 77.3' LT

250'
(STOP BAR TO DETECTION)

IL ROUTE 38

634 | 635+00 | 636 | 637 | 638 | 639 | 640+0

108 | 107 | 106 | 55+00

DEMENT ROAD

250'

TEMPORARY WOOD POLE
APPROX. STA. 638+09.6, 65.0' RT

TEMPORARY AERIAL
SERVICE CABLE

AC

TEMPORARY WOOD POLE
APPROX. STA. 636+19.7, 69.9' RT

TEMPORARY WOOD POLE
APPROX. STA. 636+51.7, 102.3' RT

DEMENT ROAD

AC

CONSTRUCTION NOTE:

1. SUPPLEMENTAL TEMPORARY LIGHTING POLES ARE INCLUDED IN THE UNIT COST OF PAY ITEM; TEMPORARY TRAFFIC SIGNAL INSTALLATION. SEE SPECIAL PROVISION FOR MORE INFORMATION.

MODEL: Default
FILE NAME: N:\DOT\220628\CAD_Sheets\Traffic\D284N98-TS-Dement-Sht-03_TMP-Ex Cond.dgn

CHRISTOPHER B. BURKE ENGINEERING, LTD.
9575 W. Higgins Road, Suite 600
Rosemont, Illinois 60018
(847) 823-0500

USER NAME = nhowellindgren	DESIGNED - BC	REVISED -	
	DRAWN - FPB	REVISED -	
	CHECKED - GMZ	REVISED -	
PLOT DATE = 2/6/2025	DATE -	REVISED -	

STATE OF ILLINOIS
DEPARTMENT OF TRANSPORTATION

TEMPORARY TRAFFIC SIGNAL INSTALLATION PLAN
IL ROUTE 38 AND DEMENT ROAD

SCALE: 1:40 | SHEET OF SHEETS | STA. TO STA.

F.A.P. RTE.	SECTION	COUNTY	TOTAL SHEETS	SHEET NO.
567	141-1HBR-3 & (9,10) R-3	OGLE	508	340
		CONTRACT NO. 64N98		
		ILLINOIS	FED. AID PROJECT	

TEMPORARY TRAFFIC SIGNAL LEGEND

- TEMPORARY SIGNAL CONTROLLER
- TEMPORARY SERVICE INSTALLATION
- TEMPORARY SIGNAL HEAD
- TEMPORARY WOOD POLE (CLASS 5 OR BETTER) 45' MIN.
- TEMPORARY SPAN WIRE, TETHER WIRE AND CABLE
- GUY WIRE
- TEMPORARY VIDEO DETECTION CAMERA
- TEMPORARY LED LUMINAIRE
- VIDEO DETECTION

MOT STAGE 1A, MOT STAGE 1B, AND MOT STAGE 1C

N

0 20 40 60
SCALE IN FEET

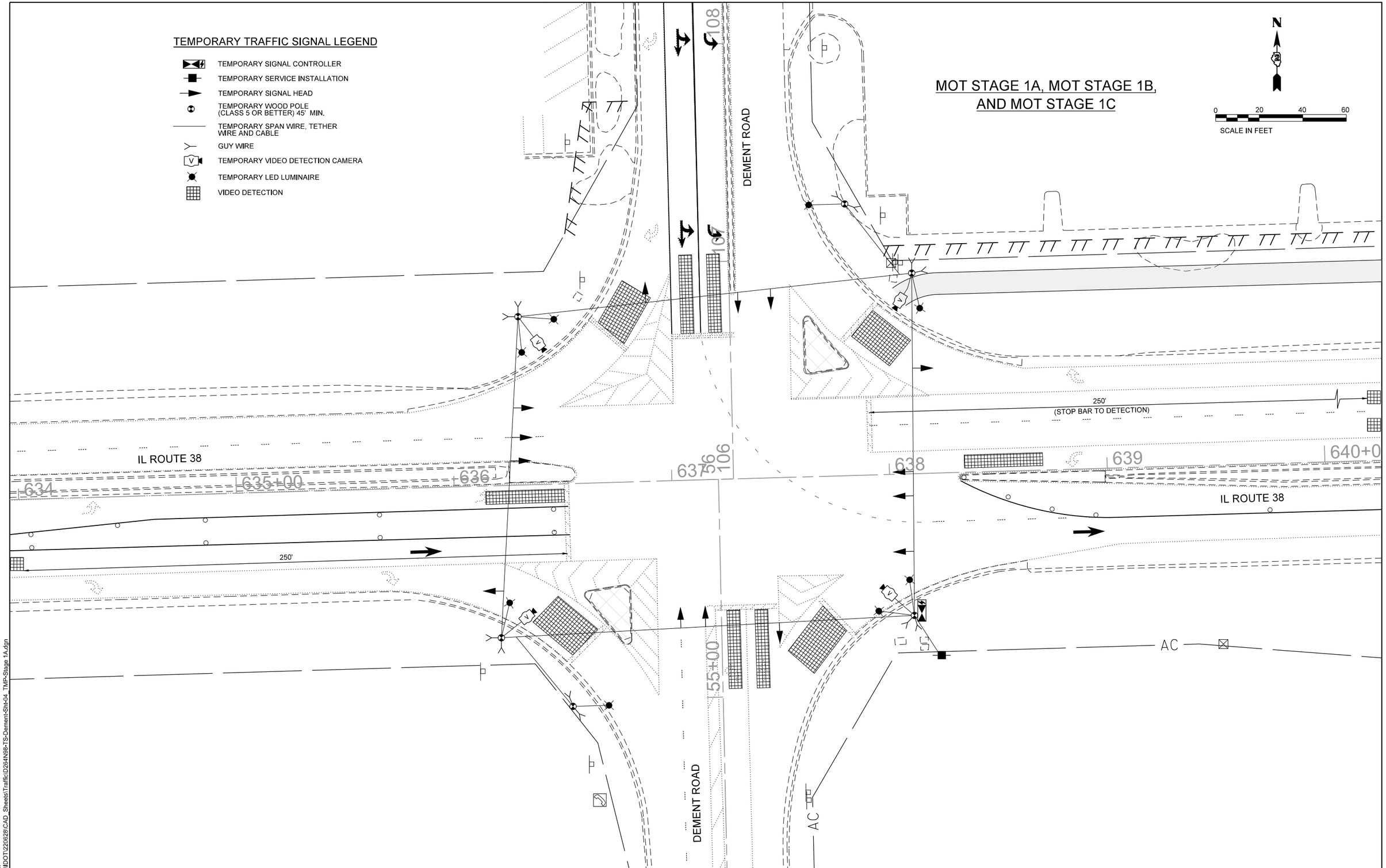

MODEL: Default
FILE NAME: N:\DOT\220628\CAD_Sheets\Traffic\D264N98-TS-Dement-Sht-04_TMP-Stage 1A.dgn

CHRISTOPHER B. BURKE ENGINEERING, LTD.
9575 W. Higgins Road, Suite 600
Rosemont, Illinois 60018
(847) 823-0500

USER NAME = nhowellindgren	DESIGNED - BC	REVISED -	
	DRAWN - FPB	REVISED -	
	CHECKED - GMZ	REVISED -	
PLOT DATE = 2/6/2025	DATE -	REVISED -	

STATE OF ILLINOIS
DEPARTMENT OF TRANSPORTATION

TEMPORARY TRAFFIC SIGNAL INSTALLATION PLAN
IL ROUTE 38 AND DEMENT ROAD

SCALE: 1:40 | SHEET OF SHEETS | STA. TO STA.

F.A.P. RTE.	SECTION	COUNTY	TOTAL SHEETS	SHEET NO.
567	141-1HBR-3 & (9,10) R-3	OGLE	508	341
		CONTRACT NO. 64N98		
		ILLINOIS	FED. AID PROJECT	

TEMPORARY TRAFFIC SIGNAL LEGEND

- TEMPORARY SIGNAL CONTROLLER
- TEMPORARY SERVICE INSTALLATION
- TEMPORARY SIGNAL HEAD
- TEMPORARY WOOD POLE (CLASS 5 OR BETTER) 45' MIN.
- TEMPORARY SPAN WIRE, TETHER WIRE AND CABLE
- GUY WIRE
- TEMPORARY VIDEO DETECTION CAMERA
- TEMPORARY LED LUMINAIRE
- VIDEO DETECTION

MOT STAGE 1D, MOT STAGE 2A, AND MOT STAGE 2B

N

0 20 40 60
SCALE IN FEET

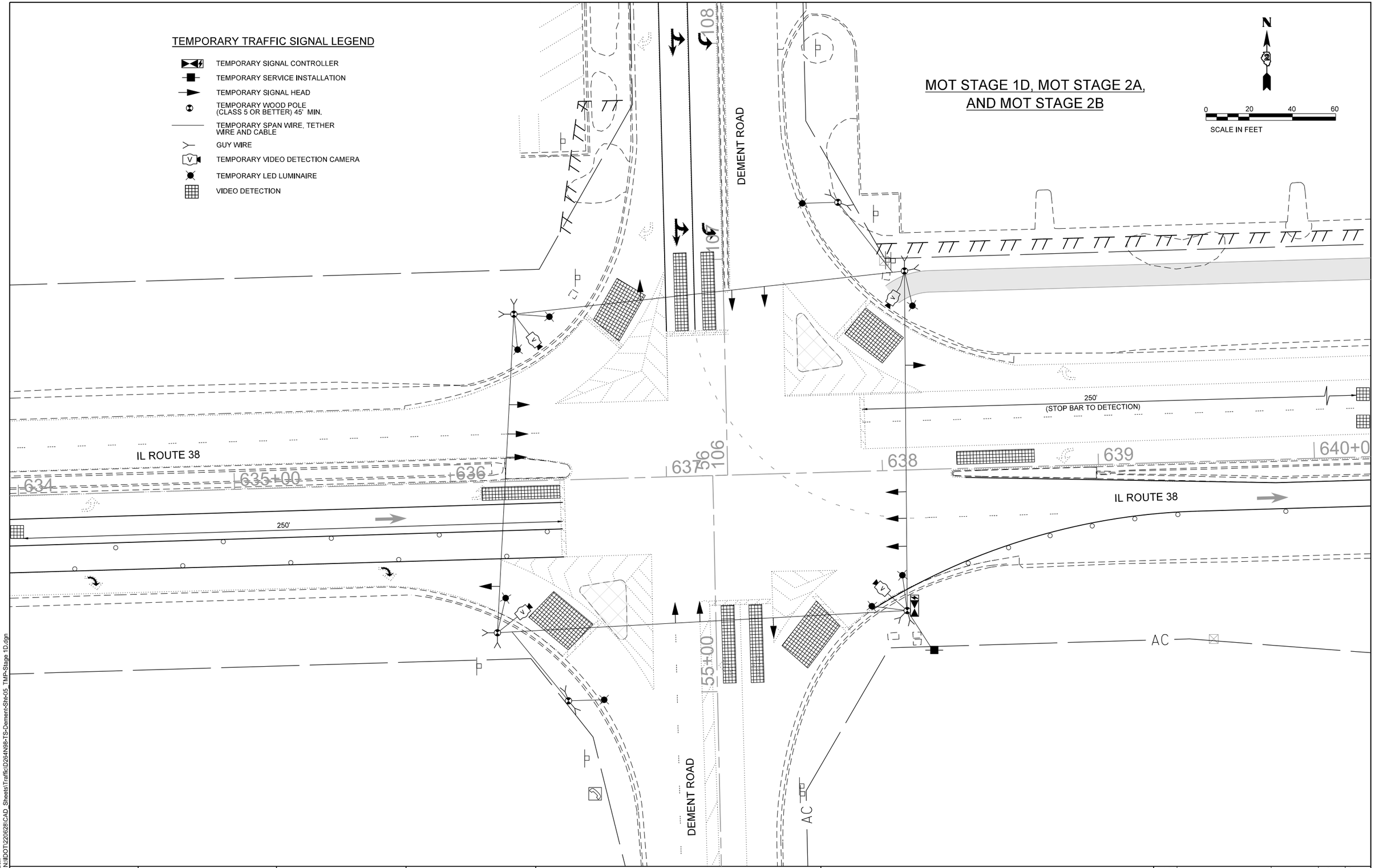

MODEL: Default
FILE NAME: N:\DOT\220628\CAD_Sheets\Traffic\D264N98-TS-Dement-Sht-05_TMP-Stage 1D.dgn

CHRISTOPHER B. BURKE ENGINEERING, LTD.
9575 W. Higgins Road, Suite 600
Rosemont, Illinois 60018
(847) 823-0500

USER NAME = nhowellindgren	DESIGNED - BC	REVISED -	
	DRAWN - FPB	REVISED -	
	CHECKED - GMZ	REVISED -	
PLOT DATE = 2/6/2025	DATE -	REVISED -	

STATE OF ILLINOIS
DEPARTMENT OF TRANSPORTATION

TEMPORARY TRAFFIC SIGNAL INSTALLATION PLAN
IL ROUTE 38 AND DEMENT ROAD

SCALE: 1:40 | SHEET OF SHEETS | STA. TO STA.

F.A.P. RTE.	SECTION	COUNTY	TOTAL SHEETS	SHEET NO.
567	141-1HBR-3 & (9,10) R-3	OGLE	508	342
		CONTRACT NO. 64N98		
		ILLINOIS	FED. AID PROJECT	

TEMPORARY TRAFFIC SIGNAL LEGEND

- TEMPORARY SIGNAL CONTROLLER
- TEMPORARY SERVICE INSTALLATION
- TEMPORARY SIGNAL HEAD
- TEMPORARY WOOD POLE (CLASS 5 OR BETTER) 45' MIN.
- TEMPORARY SPAN WIRE, TETHER WIRE AND CABLE
- GUY WIRE
- TEMPORARY VIDEO DETECTION CAMERA
- TEMPORARY LED LUMINAIRE
- VIDEO DETECTION
- TEMPORARY PEDESTRIAN SIGNAL
- TEMPORARY PUSHBUTTON
- BM ● BARREL MOUNTED SIGNAL POST

MOT FINAL CONDITION

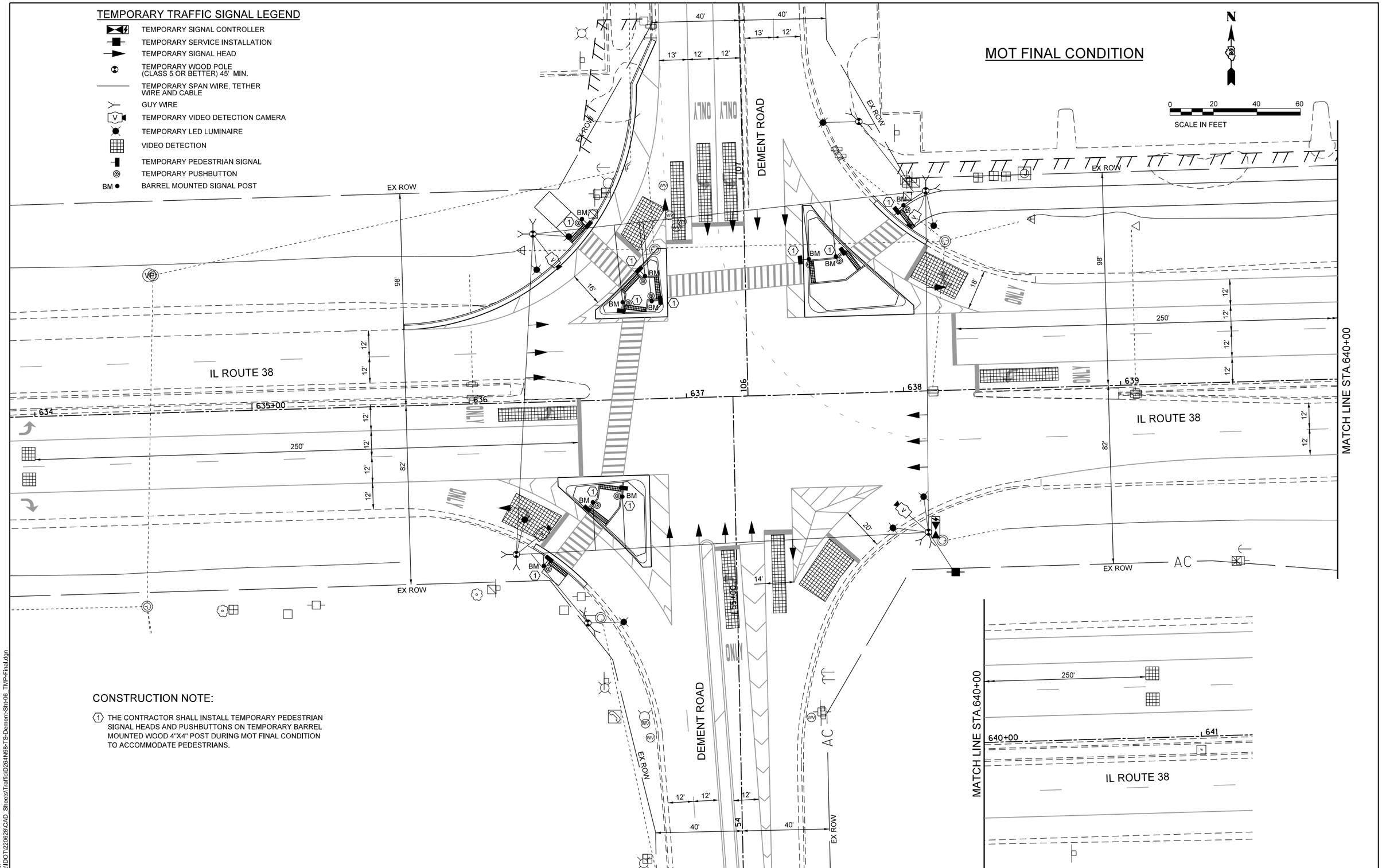

CONSTRUCTION NOTE:

1. THE CONTRACTOR SHALL INSTALL TEMPORARY PEDESTRIAN SIGNAL HEADS AND PUSHBUTTONS ON TEMPORARY BARREL MOUNTED WOOD 4"X4" POST DURING MOT FINAL CONDITION TO ACCOMMODATE PEDESTRIANS.

MODEL: Default
FILE NAME: N:\IDOT\220628\CAD_Sheets\Traffic\D284N98-TS-Dement-Sht-06_TMP-Final.dgn

CHRISTOPHER B. BURKE ENGINEERING, LTD.
9575 W. Higgins Road, Suite 600
Rosemont, Illinois 60018
(847) 823-0500

USER NAME = nhowellllindgren	DESIGNED - BC	REVISED -	
	DRAWN - FPB	REVISED -	
	CHECKED - GMZ	REVISED -	
PLOT DATE = 2/6/2025	DATE -	REVISED -	

STATE OF ILLINOIS
DEPARTMENT OF TRANSPORTATION

TEMPORARY TRAFFIC SIGNAL INSTALLATION PLAN
IL ROUTE 38 AND DEMENT ROAD

SCALE: 1:40 | SHEET OF SHEETS | STA. TO STA.

F.A.P. RTE.	SECTION	COUNTY	TOTAL SHEETS	SHEET NO.
567	141-1HBR-3 & (9,10) R-3	OGLE	508	343
		CONTRACT NO. 64N98		
		ILLINOIS	FED. AID PROJECT	

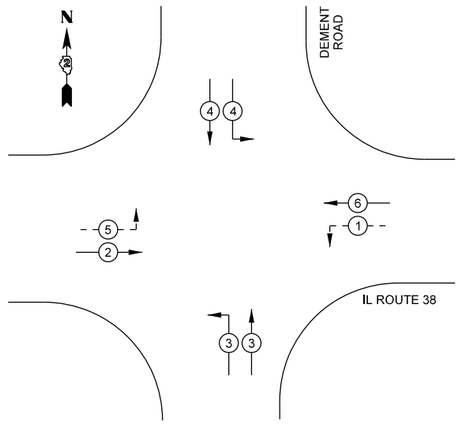

PROPOSED
CONTROLLER SEQUENCE

6 NUMBER REFERS TO ASSOCIATED PHASE

LEGEND:

- PROTECTED PHASE
- PROTECTED/PERMITTED PHASE
- PEDESTRIAN PHASE
- OL OVERLAP

TEMPORARY SIGNAL CABLE LEGEND

- TEMPORARY SIGNAL CONTROLLER
- TEMPORARY SERVICE INSTALLATION
- G DIRECTIONAL SIGNAL SECTION, 12"
- R TEMPORARY SIGNAL SECTION, 12"
- 3 ELECTRIC CABLE DENOTING NUMBER OF CONDUCTORS
- V VENDOR CABLE
- TEMPORARY WOOD POLE
- V TEMPORARY VIDEO DETECTION CAMERA
- TEMPORARY LED LUMINAIRE

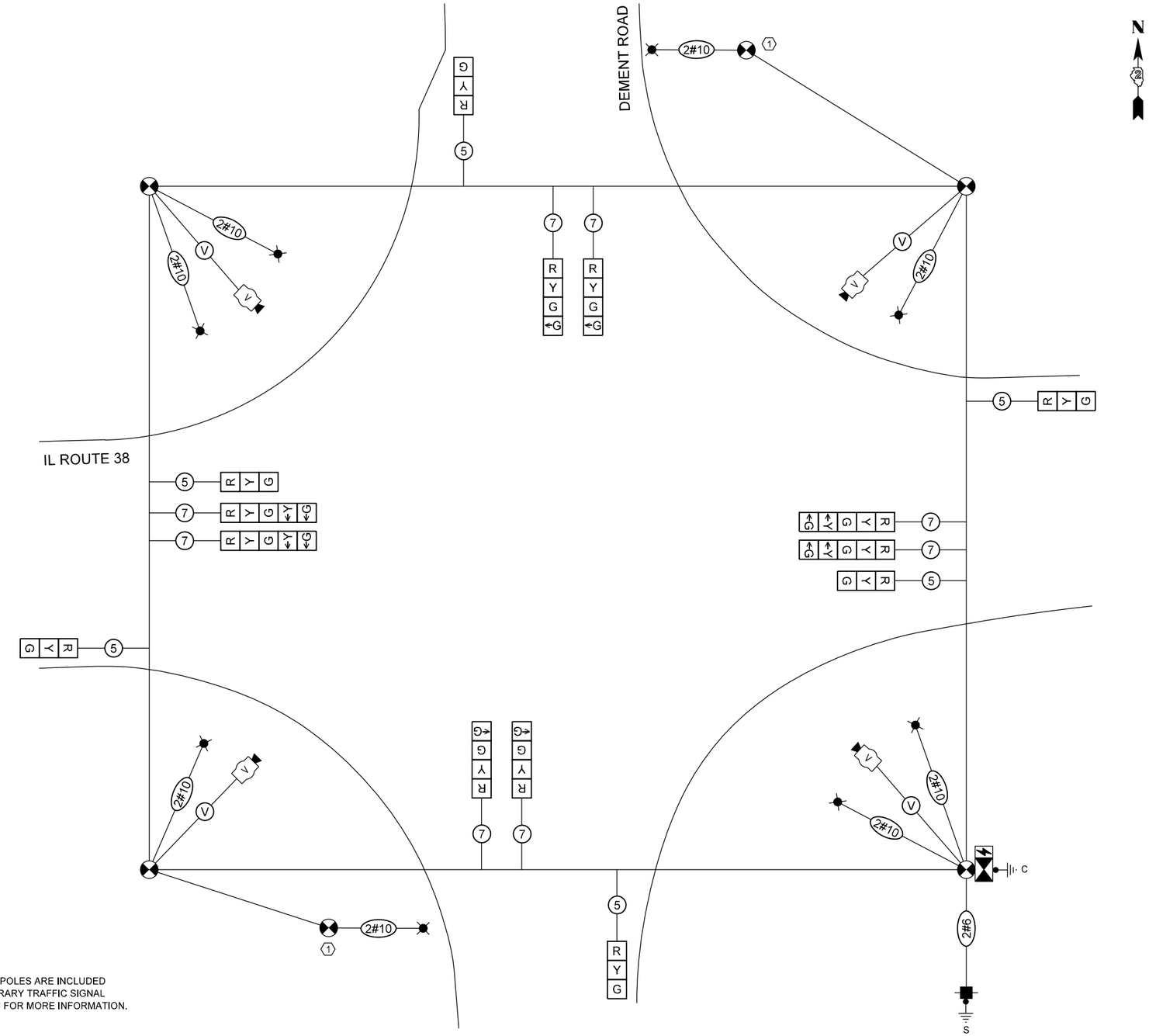

CONSTRUCTION NOTE:

1 SUPPLEMENTAL TEMPORARY LIGHTING POLES ARE INCLUDED IN THE UNIT COST OF PAY ITEM: TEMPORARY TRAFFIC SIGNAL INSTALLATION. SEE SPECIAL PROVISION FOR MORE INFORMATION.

MOT EXISTING CONDITION, MOT STAGE 1A,
MOT STAGE 1B, MOT STAGE 1C, MOT STAGE 1D,
MOT STAGE 2A, AND MOT STAGE 2B

TEMPORARY CABLE PLAN

NOT TO SCALE

MODEL: Default
FILE NAME: N:\IDOT\220628\CAD_Sheets\Traffic\D284N98-TS-Dement-Sht-07_TMP-CAB1.dgn

CHRISTOPHER B. BURKE ENGINEERING, LTD.
9575 W. Higgins Road, Suite 600
Rosemont, Illinois 60018
(847) 823-0500

USER NAME = nhowellilindgren	DESIGNED - BC	REVISED -	STATE OF ILLINOIS DEPARTMENT OF TRANSPORTATION
	DRAWN - FPB	REVISED -	
	CHECKED - GMZ	REVISED -	
PLOT DATE = 2/6/2025	DATE -	REVISED -	

TRAFFIC SIGNAL PLANS
TEMPORARY CABLE PLAN
IL ROUTE 38 AND DEMENT ROAD

SCALE: N.T.S. | SHEET OF SHEETS | STA. TO STA.

F.A.P. RTE.	SECTION	COUNTY	TOTAL SHEETS	SHEET NO.
567	141-1HBR-3 & (9,10) R-3	OGLE	508	344
		CONTRACT NO. 64N98		
		ILLINOIS FED. AID PROJECT		

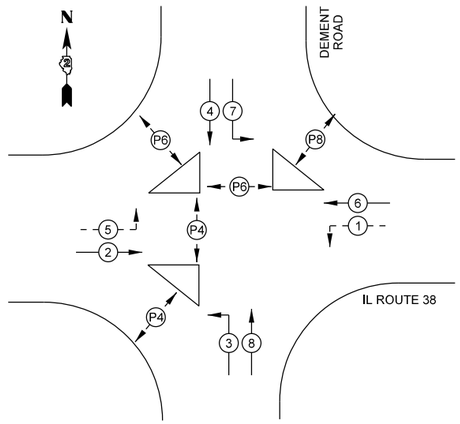

PROPOSED
CONTROLLER SEQUENCE

6 NUMBER REFERS TO ASSOCIATED PHASE

LEGEND:

- PROTECTED PHASE
- PROTECTED/PERMITTED PHASE
- PEDESTRIAN PHASE
- OL OVERLAP

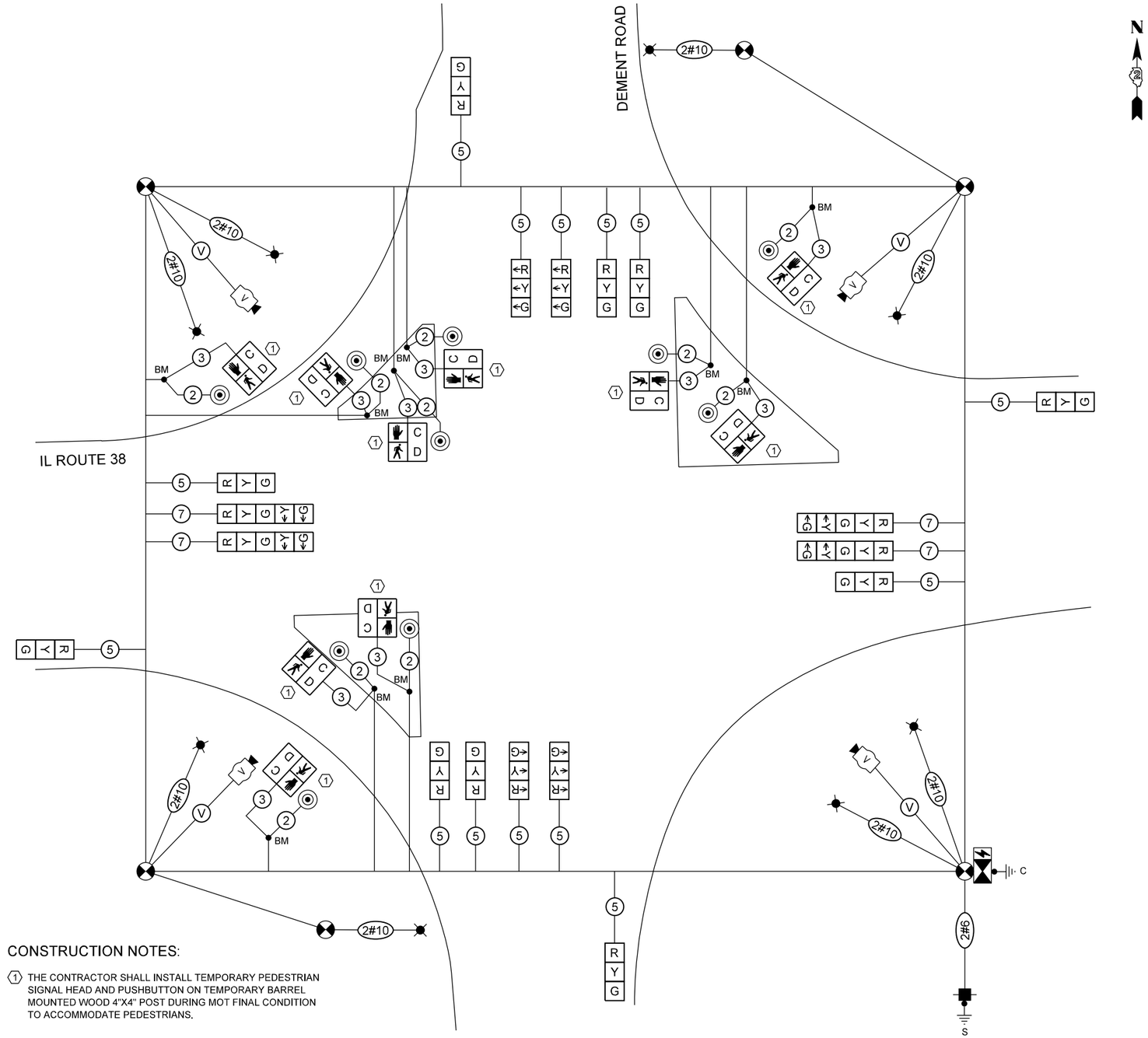

TEMPORARY SIGNAL CABLE LEGEND

- TEMPORARY SIGNAL CONTROLLER
- TEMPORARY SERVICE INSTALLATION
- G DIRECTIONAL SIGNAL SECTION, 12"
- R TEMPORARY SIGNAL SECTION, 12"
- 3 ELECTRIC CABLE DENOTING NUMBER OF CONDUCTORS
- V VENDOR CABLE
- TEMPORARY WOOD POLE
- V TEMPORARY VIDEO DETECTION CAMERA
- TEMPORARY LED LUMINAIRE
- C D TEMPORARY PEDESTRIAN SIGNAL SECTION WITH COUNTDOWN TIMER
- TEMPORARY PUSHBUTTON
- BM BARREL MOUNTED SIGNAL POST

CONSTRUCTION NOTES:

1. THE CONTRACTOR SHALL INSTALL TEMPORARY PEDESTRIAN SIGNAL HEAD AND PUSHBUTTON ON TEMPORARY BARREL MOUNTED WOOD 4"X4" POST DURING MOT FINAL CONDITION TO ACCOMMODATE PEDESTRIANS.

MOT FINAL CONDITION
TEMPORARY CABLE PLAN
NOT TO SCALE

MODEL: Default
FILE NAME: N:\DOT\220\628\CAD_Sheets\Traffic\D284N98-TS-Dement-Sht-08_TMP-CAB2.dgn

CHRISTOPHER B. BURKE ENGINEERING, LTD.
9575 W. Higgins Road, Suite 600
Rosemont, Illinois 60018
(847) 823-0500

USER NAME = nhowellllindgren	DESIGNED - BC	REVISED -	STATE OF ILLINOIS DEPARTMENT OF TRANSPORTATION
	DRAWN - FPB	REVISED -	
	CHECKED - GMZ	REVISED -	
PLOT DATE = 2/6/2025	DATE -	REVISED -	

TRAFFIC SIGNAL PLANS
TEMPORARY CABLE PLAN
IL ROUTE 38 AND DEMENT ROAD

SCALE: N.T.S. | SHEET OF SHEETS | STA. TO STA.

F.A.P. RTE.	SECTION	COUNTY	TOTAL SHEETS	SHEET NO.
567	141-1HBR-3 & (9,10) R-3	OGLE	508	345
		CONTRACT NO. 64N98		
		ILLINOIS FED. AID PROJECT		

TRAFFIC SIGNAL LEGEND

EXISTING	PROPOSED	
		SIGNAL HEAD WITH BACKPLATE
		SIGNAL HEAD WITHOUT BACKPLATE
		HANDHOLE, PCC
		DOUBLE HANDHOLE, PCC
		JUNCTION BOX
		CONDUIT
		STEEL MAST ARM ASSEMBLY AND POLE
		STEEL COMBINATION MAST ARM ASSEMBLY AND POLE WITH LUMINAIRE (LENGTH SPECIFIED)
		TRAFFIC SIGNAL POST
		SERVICE POLE
		CONTROLLER CABINET WITH CONCRETE FOUNDATION
V	V	TRAFFIC SIGNAL VIDEO DETECTOR SYSTEM
		TRAFFIC SIGNAL PEDESTRIAN SIGNAL HEAD
		TRAFFIC SIGNAL PEDESTRIAN PUSH BUTTON -(APS) ACCESSIBLE PEDESTRIAN PUSH-BUTTON
		SIGN
TS	TS	TRANSFER SWITCH

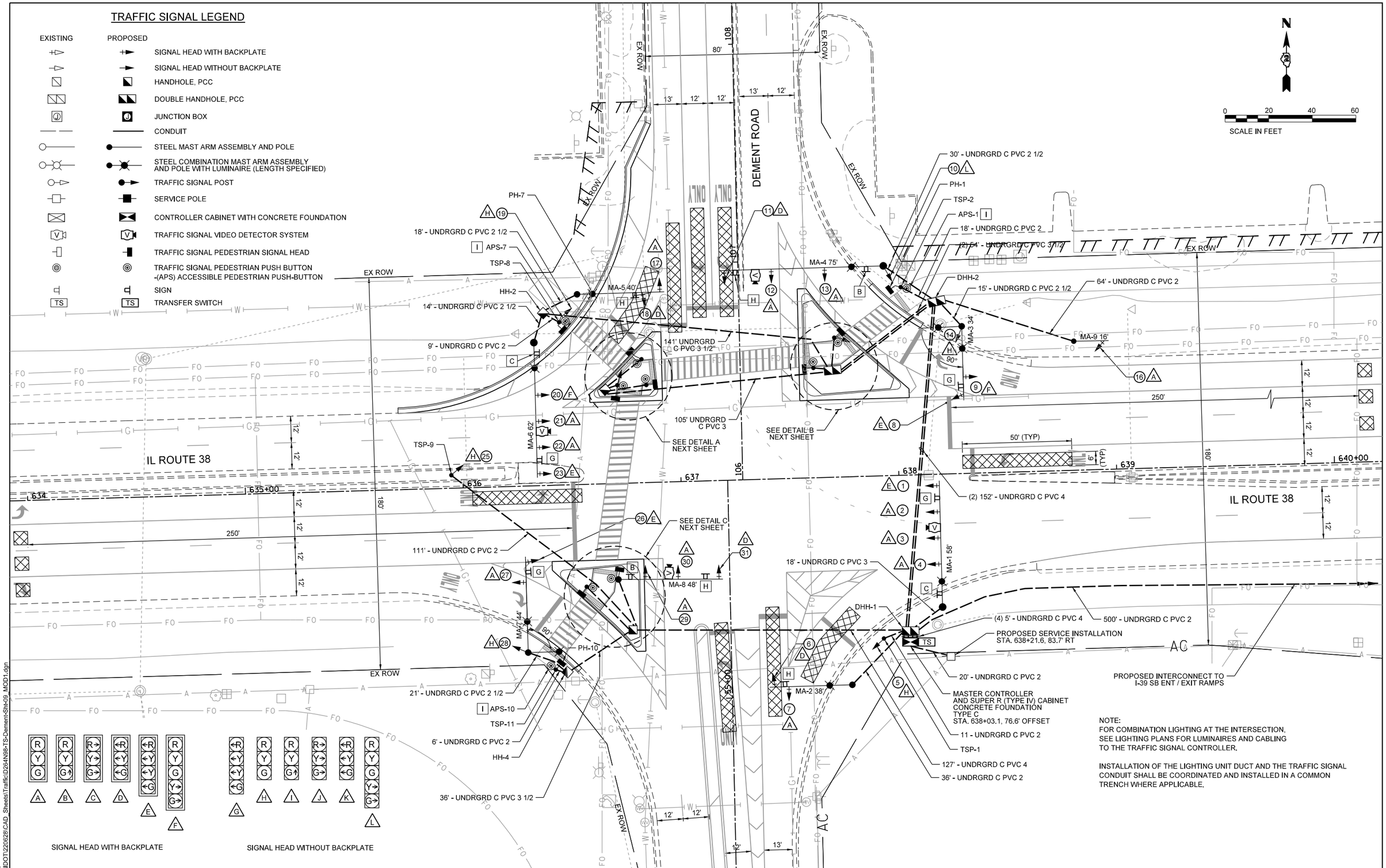

NOTE:
FOR COMBINATION LIGHTING AT THE INTERSECTION, SEE LIGHTING PLANS FOR LUMINAIRES AND CABLING TO THE TRAFFIC SIGNAL CONTROLLER.

INSTALLATION OF THE LIGHTING UNIT DUCT AND THE TRAFFIC SIGNAL CONDUIT SHALL BE COORDINATED AND INSTALLED IN A COMMON TRENCH WHERE APPLICABLE.

MODEL: Default
FILE NAME: N:\DOT\220628\CAD_Sheets\Traffic\D264N98-TS-Dement-Sht-09_MOD1.dgn

CHRISTOPHER B. BURKE ENGINEERING, LTD.
9575 W. Higgins Road, Suite 600
Rosemont, Illinois 60018
(847) 823-0500

USER NAME = nhowelllindgren	DESIGNED - BC	REVISED -	
	DRAWN - FPB	REVISED -	
	CHECKED - GMZ	REVISED -	
PLOT DATE = 2/6/2025	DATE -	REVISED -	

STATE OF ILLINOIS
DEPARTMENT OF TRANSPORTATION

TRAFFIC SIGNAL PLANS
IL ROUTE 38 AND DEMENT ROAD

SCALE: 1:40 | SHEET OF SHEETS | STA. TO STA.

F.A.P. RTE.	SECTION	COUNTY	TOTAL SHEETS	SHEET NO.
567	141-1HBR-3 & (9,10) R-3	OGLE	508	346
		CONTRACT NO. 64N98		
		ILLINOIS	FED. AID PROJECT	

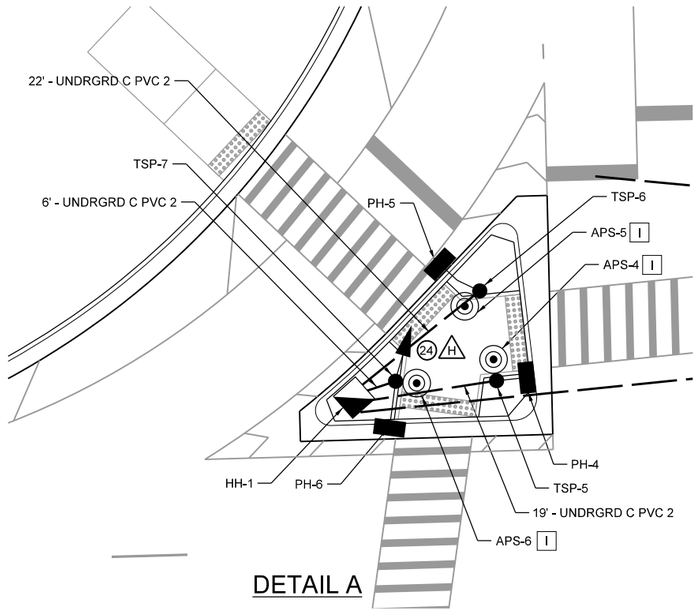

DETAIL A

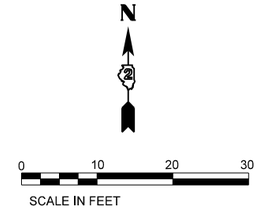

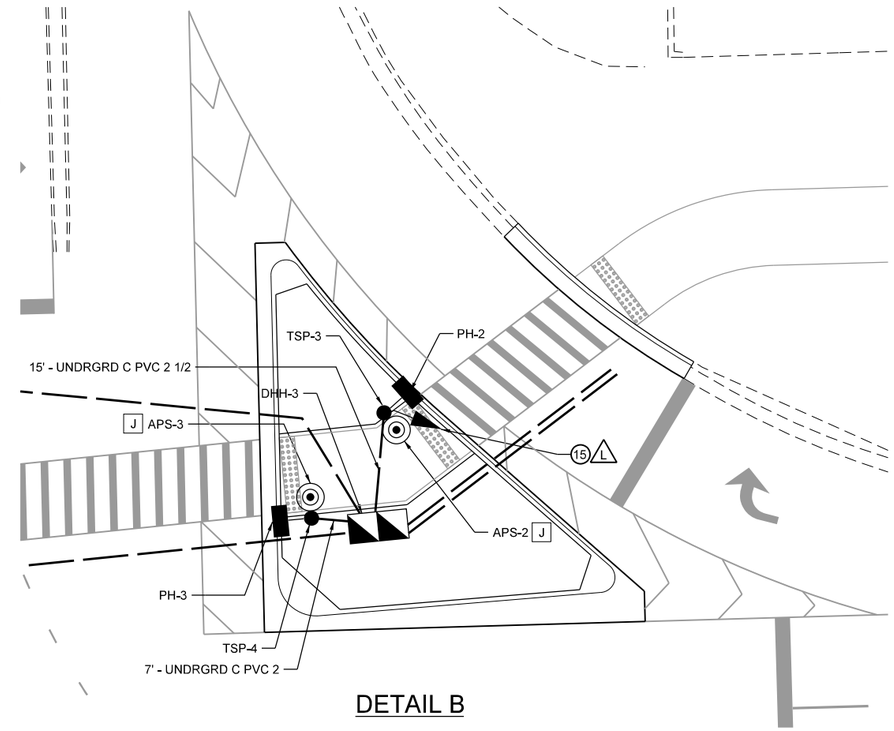

DETAIL B

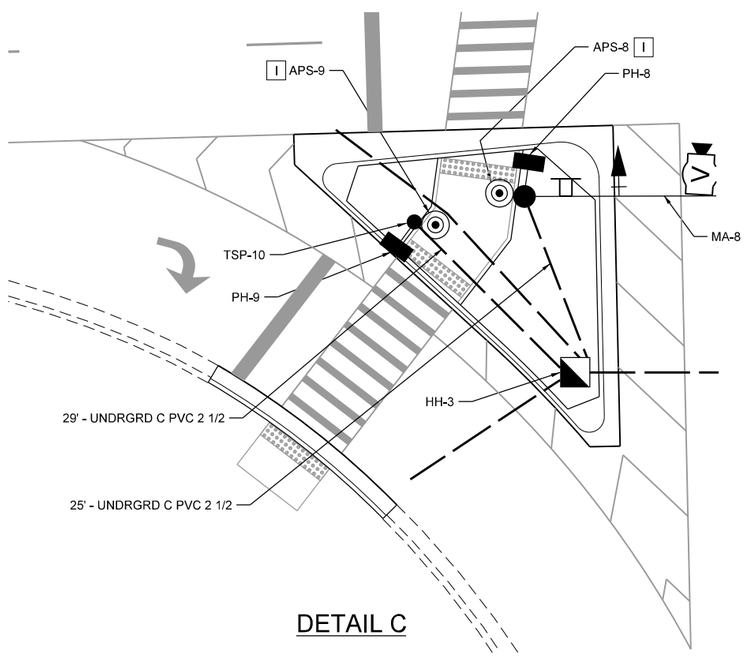

DETAIL C

MODEL: Default
FILE NAME: N:\DOT\220628\CAD_Sheets\Traffic\D284N98-TS-Dement-Sht-10_MOD2.dgn

CHRISTOPHER B. BURKE ENGINEERING, LTD. 9575 W. Higgins Road, Suite 600 Rosemont, Illinois 60018 (847) 823-0500	USER NAME = nhowelllindgren	DESIGNED - BC	REVISED -	STATE OF ILLINOIS DEPARTMENT OF TRANSPORTATION	TRAFFIC SIGNAL PLANS IL ROUTE 38 AND DEMENT ROAD	F.A.P. RTE.	SECTION	COUNTY	TOTAL SHEETS / SHEET NO.
		DRAWN - FPB	REVISED -			567	141-1HBR-3 & (9,10) R-3	OGLE	508 / 347
		CHECKED - GMZ	REVISED -					CONTRACT NO. 64N98	
	PLOT DATE = 2/6/2025	DATE -	REVISED -		SCALE: 1:20 SHEET OF SHEETS STA. TO STA.			ILLINOIS FED. AID PROJECT	

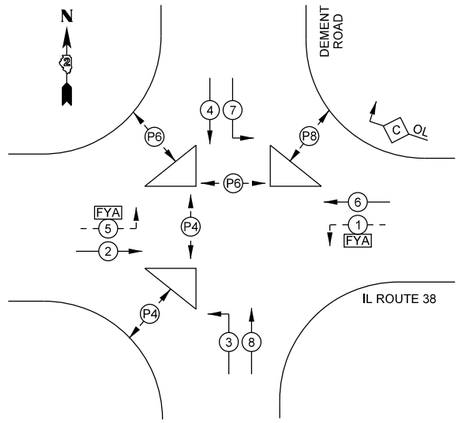

LEGEND:

- PROTECTED PHASE
- PROTECTED/PERMITTED PHASE
- PEDESTRIAN PHASE
- OL — OVERLAP
- FYA — FLASHING YELLOW ARROW

PROPOSED CONTROLLER SEQUENCE

(6) — NUMBER REFERS TO ASSOCIATED PHASE

FYA: FLASHING YELLOW ARROW

RIGHT TURN OVERLAP PHASE DESIGNATION:

OVERLAP LETTER		PERMISSIVE PHASE		PROTECTED PHASE
C	=	6	+	7

PROPOSED TRAFFIC SIGNAL LEGEND (SHEET DETAILS)

- (5) — ELECTRIC CABLE DENOTING NUMBER OF CONDUCTORS
- SIGNAL FACE WITH BACKPLATE
- SIGNAL FACE WITHOUT BACKPLATE
- G — DIRECTIONAL SIGNAL SECTION
- R — SIGNAL SECTION 12"
- C / D — WALK/DON'T WALK SECTION + COUNT DOWN
- P — GROUND WIRE (POLE)
- MA — GROUND WIRE (MAST ARM)
- APS — PROPOSED TRAFFIC SIGNAL PEDESTRIAN PUSH BUTTON -(APS) ACCESSIBLE PEDESTRIAN PUSH-BUTTON
- V — VIDEO DETECTION CAMERA
- (V) — VENDOR CABLE
- TS — TRANSFER SWITCH
- CONTROLLER CABINET
- TRAFFIC SIGNAL SERVICE INSTALLATION

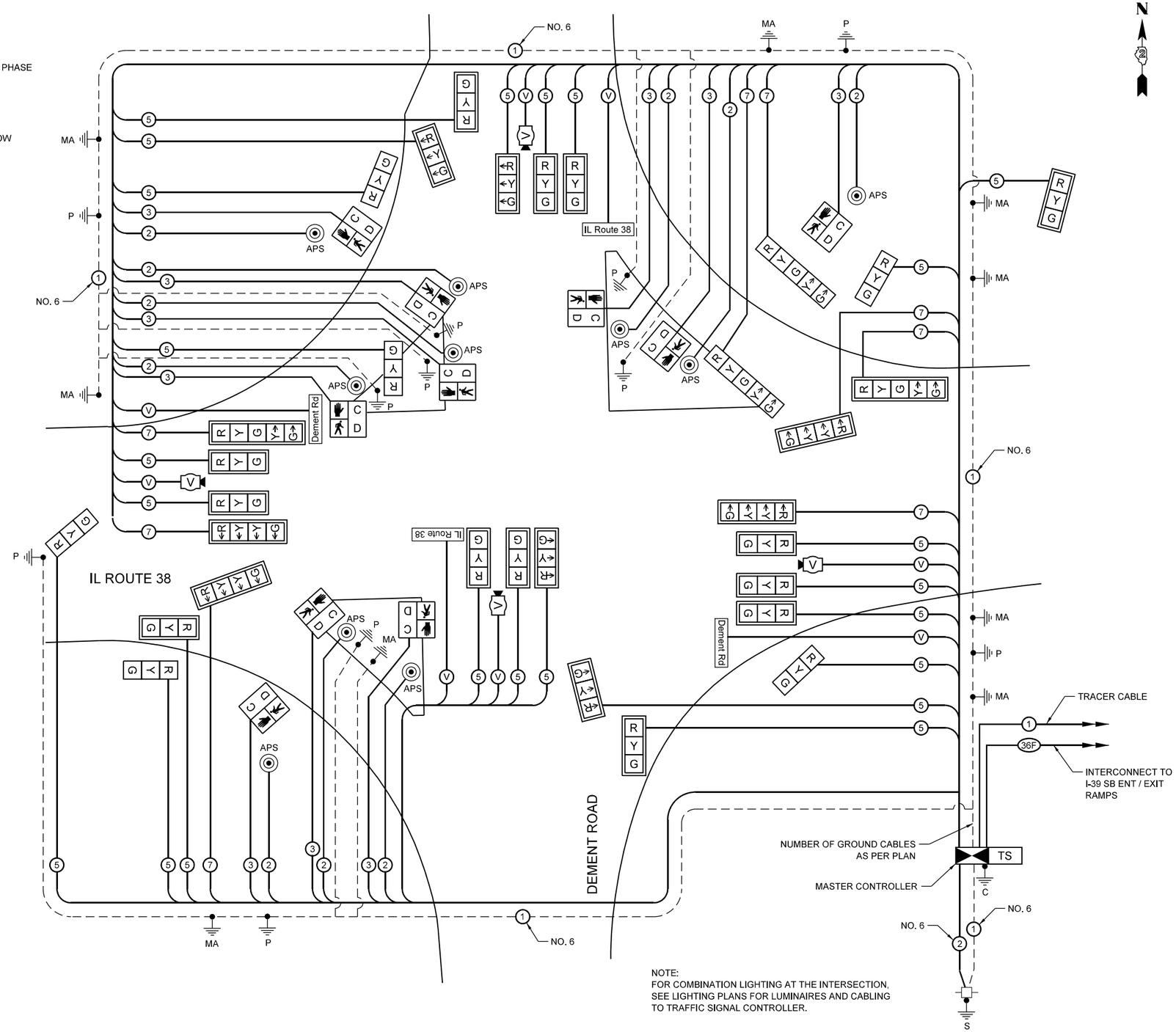

NOTE:
FOR COMBINATION LIGHTING AT THE INTERSECTION, SEE LIGHTING PLANS FOR LUMINAIRES AND CABLING TO TRAFFIC SIGNAL CONTROLLER.

MODEL: Default
FILE NAME: N:\IDOT\220628\CAD_Sheets\Traffic\D264N98-TS-Dement-Sht-11_CAB.dgn

CHRISTOPHER B. BURKE ENGINEERING, LTD.
9575 W. Higgins Road, Suite 600
Rosemont, Illinois 60018
(847) 823-0500

USER NAME = nhowellllindgren	DESIGNED - BC	REVISED -	
	DRAWN - FPB	REVISED -	
	CHECKED - GMZ	REVISED -	
PLOT DATE = 2/6/2025	DATE -	REVISED -	

STATE OF ILLINOIS
DEPARTMENT OF TRANSPORTATION

TRAFFIC SIGNAL PLANS
CABLE PLAN
IL ROUTE 38 AND DEMENT ROAD

SCALE: N.T.S. | SHEET OF SHEETS | STA. TO STA.

F.A.P. RTE.	SECTION	COUNTY	TOTAL SHEETS	SHEET NO.
567	141-1HBR-3 & (9,10) R-3	OGLE	508	348

CONTRACT NO. 64N98

ILLINOIS | FED. AID PROJECT

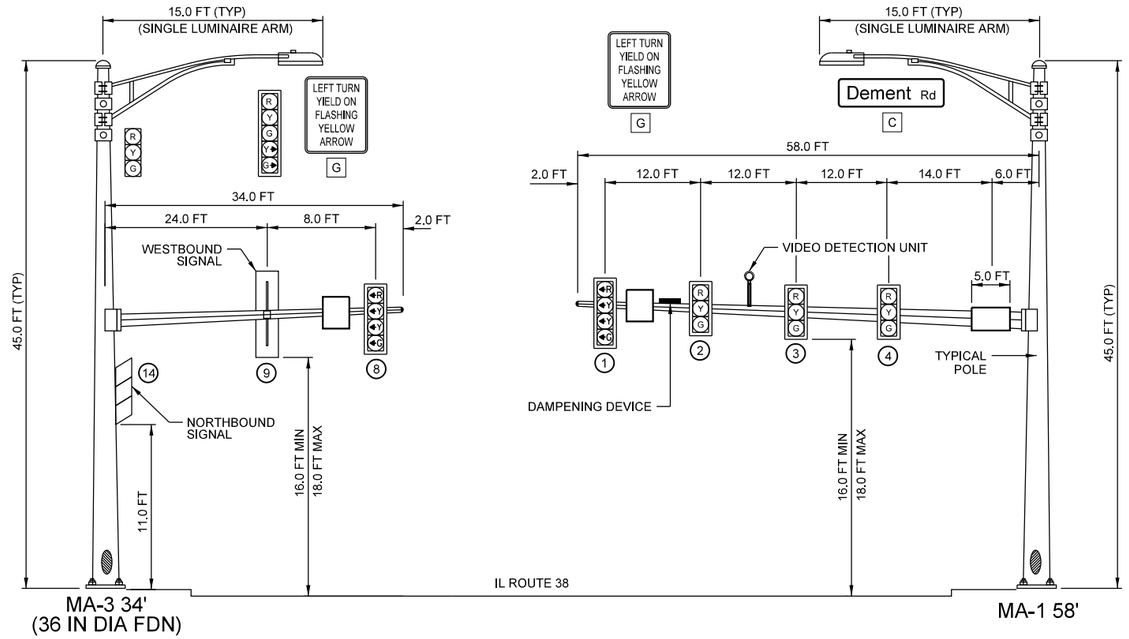

EASTBOUND TRAFFIC SIGNAL (NE AND SE QUADRANTS)
IL ROUTE 38 AND DEMENT ROAD

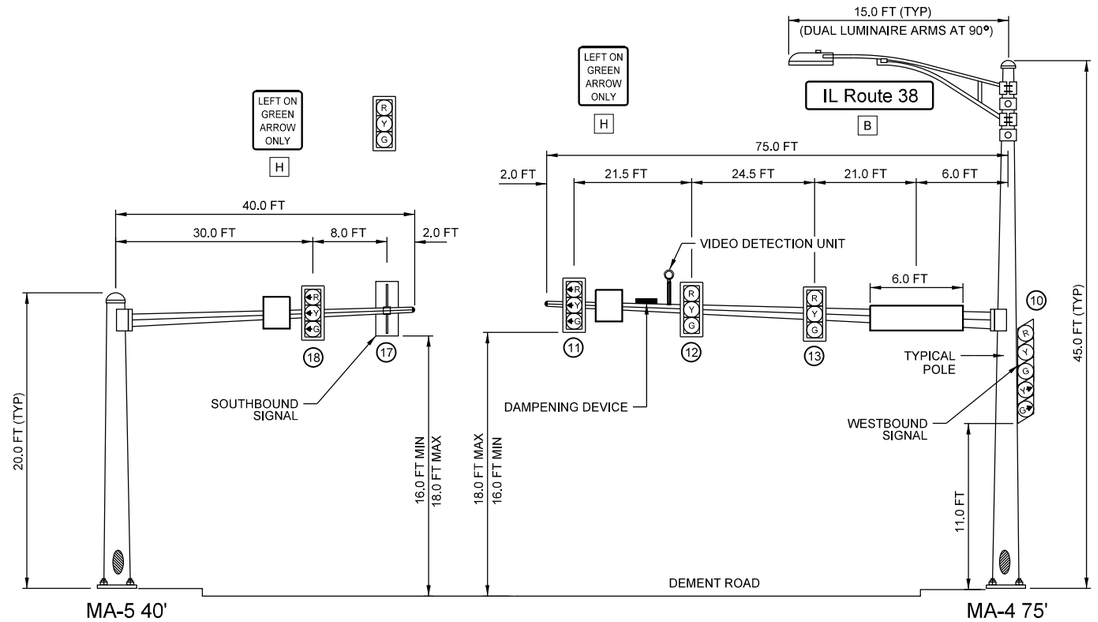

NORTHBOUND TRAFFIC SIGNAL (NW AND NE QUADRANTS)
IL ROUTE 38 AND DEMENT ROAD

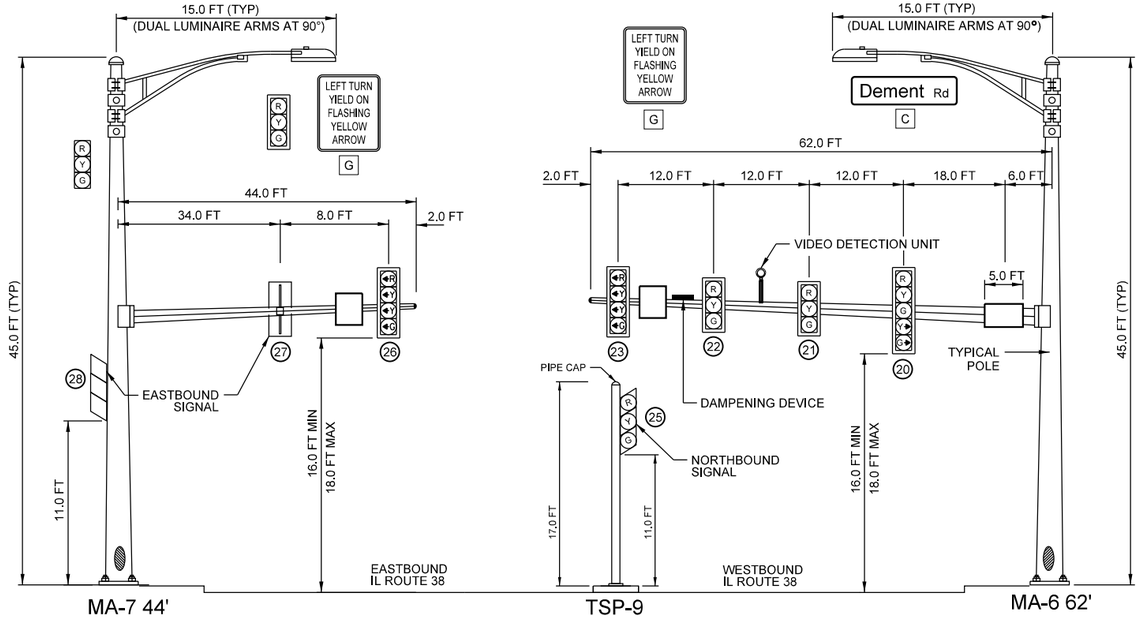

WESTBOUND TRAFFIC SIGNAL (SW AND NW QUADRANTS)
IL ROUTE 38 AND DEMENT ROAD

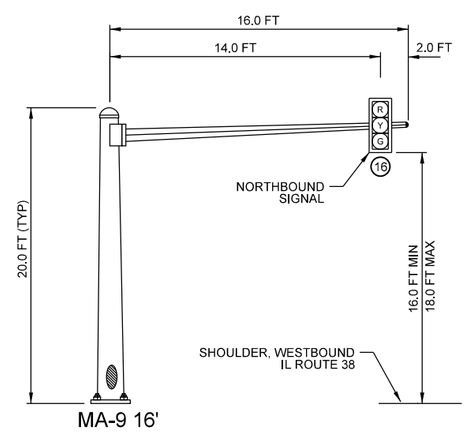

SOUTH APPROACH NORTHBOUND TRAFFIC SIGNAL
(NE QUADRANT)
IL ROUTE 38 AND DEMENT ROAD

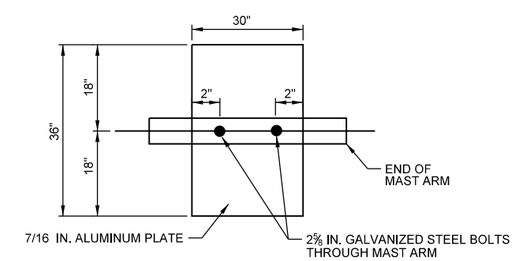

DAMPENING PLATE DETAIL
(TOP VIEW) INCIDENTAL TO MAST ARM QUANTITY
NOT TO SCALE

NOTE:
DAMPENING DEVICE SHALL CONSIST OF A 30" x 36" TYPE 1 UNPAINTED ALUMINUM SIGN STOCK MOUNTED HORIZONTALLY ON TOP OF MAST ARM WITH THE 30" LENGTH PERPENDICULAR TO THE ARM. THE COST OF THE DAMPENING DEVICE IS INCLUDED IN THE COST OF THE MAST ARM PAY ITEM.

MODEL: Default
FILE NAME: N:\DOT\2220628\CAD_Sheets\Traffic\D264N98-TS-Dement-Sht-12_DET.dgn

CHRISTOPHER B. BURKE ENGINEERING, LTD.
9575 W. Higgins Road, Suite 600
Rosemont, Illinois 60018
(847) 823-0500

USER NAME = nhowellindgren	DESIGNED - BC	REVISED -	
	DRAWN - FPB	REVISED -	
	CHECKED - GMZ	REVISED -	
PLOT DATE = 2/6/2025	DATE -	REVISED -	

STATE OF ILLINOIS
DEPARTMENT OF TRANSPORTATION

TRAFFIC SIGNAL MAST ARM DETAILS
IL ROUTE 38 AND DEMENT ROAD

SCALE: N.T.S. | SHEET OF SHEETS | STA. TO STA.

F.A.P. RTE.	SECTION	COUNTY	TOTAL SHEETS	SHEET NO.
567	141-1HBR-3 & (9,10) R-3	OGLE	508	349
		CONTRACT NO. 64N98		
		ILLINOIS FED. AID PROJECT		

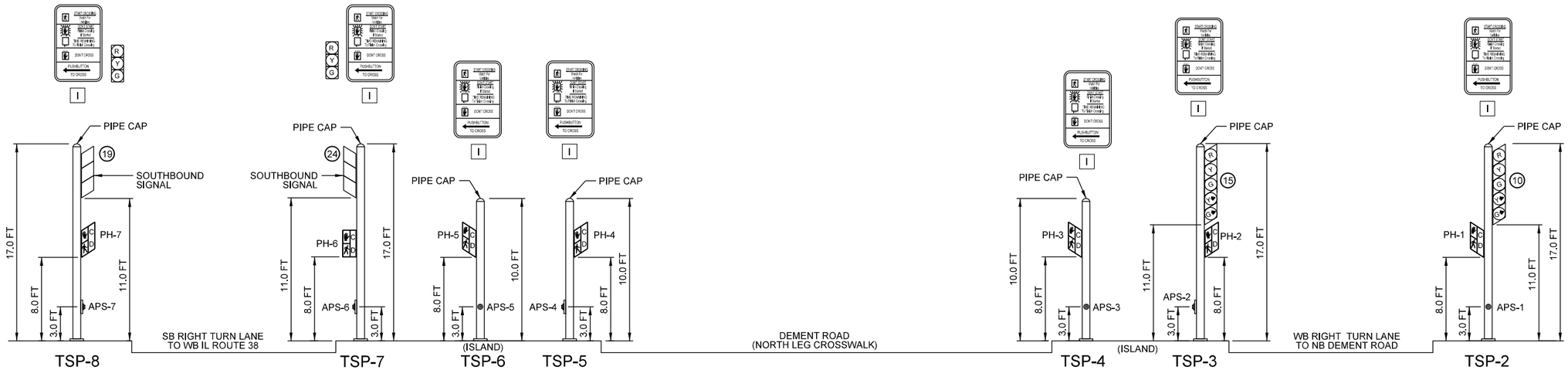

NORTHWEST AND NORTHEAST QUADRANTS
(LOOKING NORTH)
IL ROUTE 38 AND DEMENT ROAD

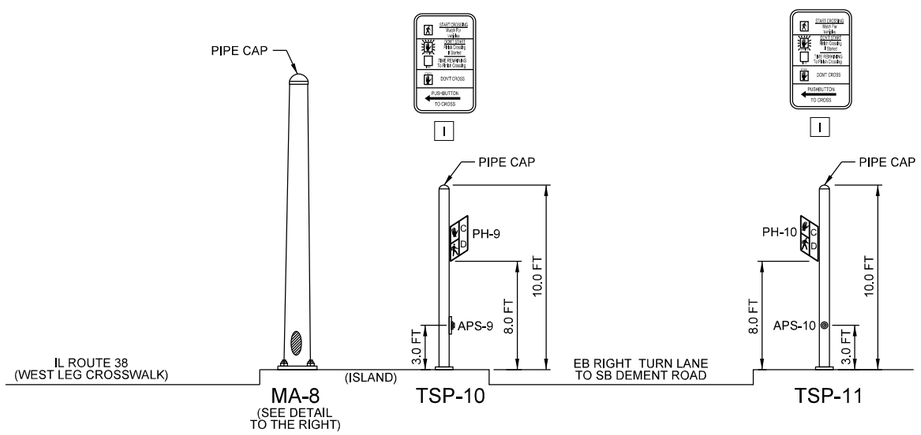

SOUTHWEST QUADRANT
(LOOKING EAST)
IL ROUTE 38 AND DEMENT ROAD

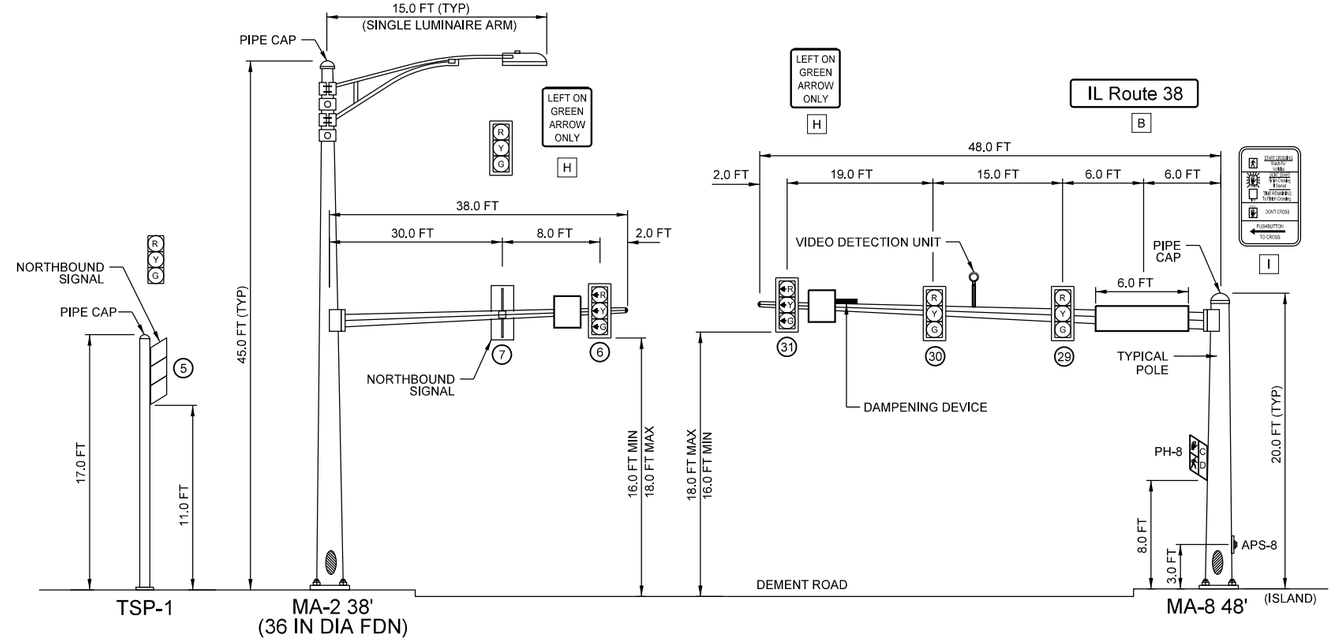

SOUTHBOUND TRAFFIC SIGNAL (SE AND SW QUADRANTS)
IL ROUTE 38 AND DEMENT ROAD

MODEL: Default
FILE NAME: N:\IDOT\220628\CAD_Sheets\Traffic\D284N98-TS-Dement-Sht-13_DET.dgn

CHRISTOPHER B. BURKE ENGINEERING, LTD.
9575 W. Higgins Road, Suite 600
Rosemont, Illinois 60018
(847) 823-0500

USER NAME = nhowellilindgren	DESIGNED - BC	REVISED -	
	DRAWN - FPB	REVISED -	
	CHECKED - GMZ	REVISED -	
PLOT DATE = 2/6/2025	DATE -	REVISED -	

STATE OF ILLINOIS
DEPARTMENT OF TRANSPORTATION

TRAFFIC SIGNAL MAST ARM AND SIGNAL POST DETAILS
IL ROUTE 38 AND DEMENT ROAD

SCALE: N.T.S. | SHEET OF SHEETS | STA. TO STA.

F.A.P. RTE.	SECTION	COUNTY	TOTAL SHEETS	SHEET NO.
567	141-1HBR-3 & (9,10) R-3	OGLE	508	350

CONTRACT NO. 64N98

ILLINOIS | FED. AID PROJECT

TEMPORARY TRAFFIC SIGNAL LEGEND

- TEMPORARY SIGNAL CONTROLLER
- TEMPORARY SERVICE INSTALLATION
- TEMPORARY SIGNAL HEAD
- TEMPORARY WOOD POLE (CLASS 5 OR BETTER) 45' MIN.
- TEMPORARY SPAN WIRE, TETHER WIRE AND CABLE
- GUY WIRE
- TEMPORARY VIDEO DETECTION CAMERA
- TEMPORARY LED LUMINAIRE
- VIDEO DETECTION

SIGN LEGEND:

SIGN (A) R3-1 36" x 36"

SIGN (B) R3-2 36" x 36"

MOT EXISTING CONDITION

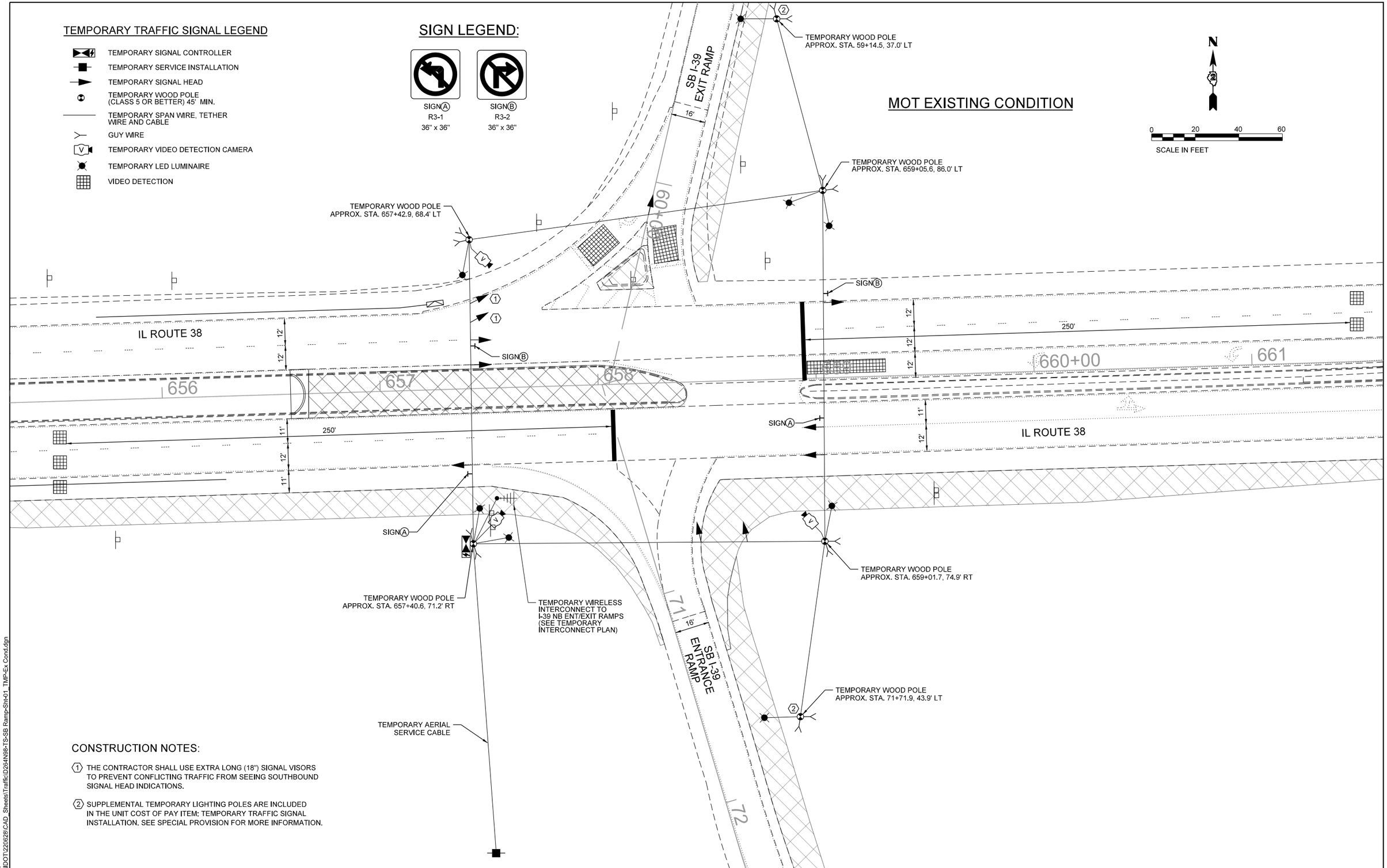

CONSTRUCTION NOTES:

(1) THE CONTRACTOR SHALL USE EXTRA LONG (18") SIGNAL VISORS TO PREVENT CONFLICTING TRAFFIC FROM SEEING SOUTHBOUND SIGNAL HEAD INDICATIONS.

(2) SUPPLEMENTAL TEMPORARY LIGHTING POLES ARE INCLUDED IN THE UNIT COST OF PAY ITEM: TEMPORARY TRAFFIC SIGNAL INSTALLATION. SEE SPECIAL PROVISION FOR MORE INFORMATION.

MODEL: Default
FILE NAME: N:\DOT\220628\CAD_Sheets\Traffic\D264N98-TS-SB Ramp-Sht-01_TMP-Ex Cond.dgn

CHRISTOPHER B. BURKE ENGINEERING, LTD.
9575 W. Higgins Road, Suite 600
Rosemont, Illinois 60018
(847) 823-0500

USER NAME = nhowellindgren	DESIGNED - BC	REVISED -	
	DRAWN - FPB	REVISED -	
	CHECKED - GMZ	REVISED -	
PLOT DATE = 2/6/2025	DATE -	REVISED -	

STATE OF ILLINOIS
DEPARTMENT OF TRANSPORTATION

TEMPORARY TRAFFIC SIGNAL INSTALLATION PLAN
IL ROUTE 38 AND I-39 SB ENT / EXIT RAMPS

SCALE: 1:40 | SHEET OF SHEETS | STA. TO STA.

F.A.P. RTE.	SECTION	COUNTY	TOTAL SHEETS	SHEET NO.
567	141-1HBR-3 & (9,10) R-3	OGLE	508	351
		CONTRACT NO. 64N98		
	ILLINOIS	FED. AID PROJECT		

TEMPORARY TRAFFIC SIGNAL LEGEND

- TEMPORARY SIGNAL CONTROLLER
- TEMPORARY SERVICE INSTALLATION
- TEMPORARY SIGNAL HEAD
- TEMPORARY WOOD POLE (CLASS 5 OR BETTER) 45' MIN.
- TEMPORARY SPAN WIRE, TETHER WIRE AND CABLE
- GUY WIRE
- TEMPORARY VIDEO DETECTION CAMERA
- TEMPORARY LED LUMINAIRE
- VIDEO DETECTION

SIGN LEGEND:

SIGN Ⓐ R3-1 36" x 36"

SIGN Ⓑ R3-2 36" x 36"

MOT STAGE 1A

N

0 20 40 60

SCALE IN FEET

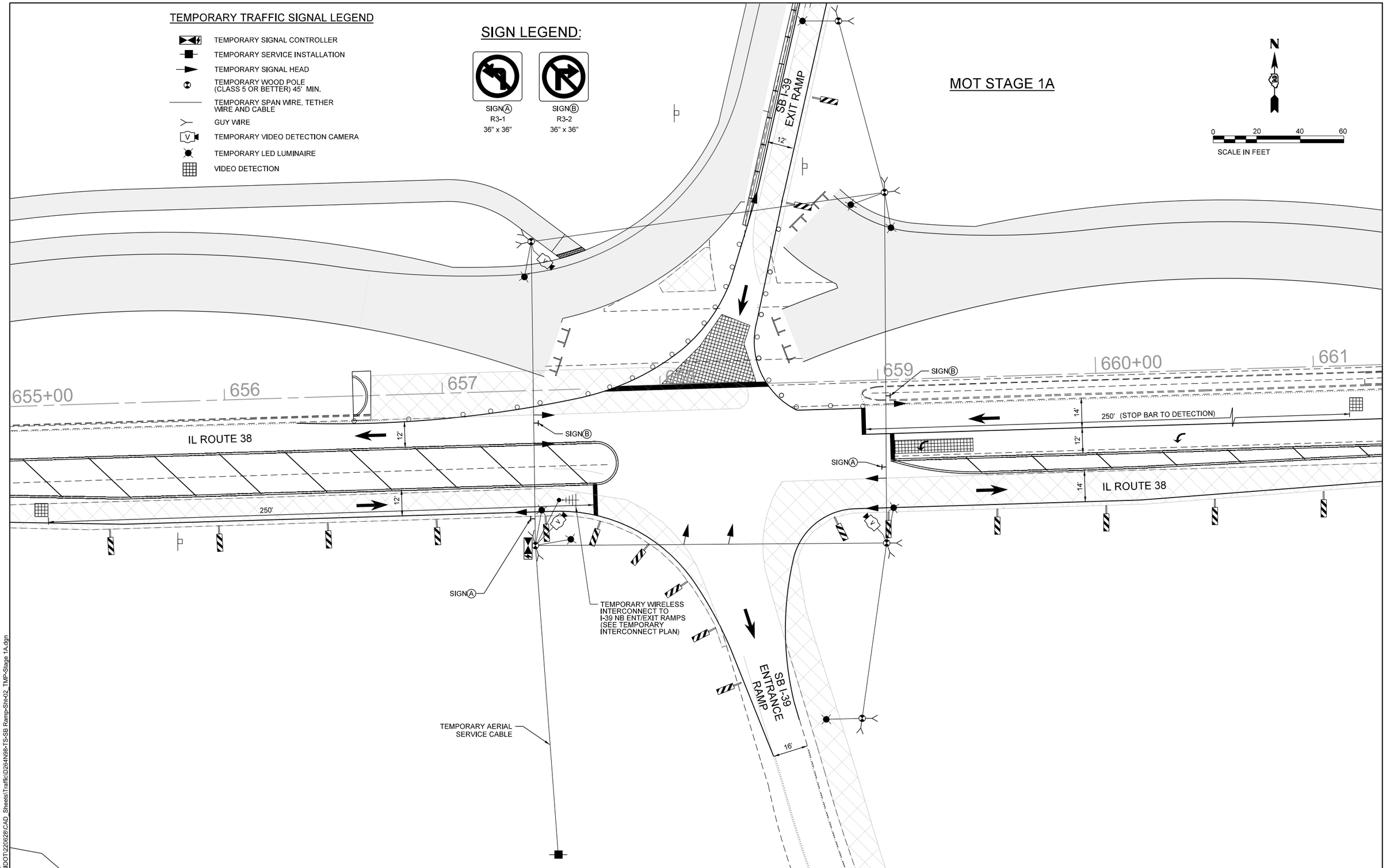

MODEL: Default
FILE NAME: N:\IDOT\220628\CAD_Sheets\Traffic\D264N98-TS-SB Ramp-Sht-02_TMP-Stage 1A.dgn

CHRISTOPHER B. BURKE ENGINEERING, LTD.
9575 W. Higgins Road, Suite 600
Rosemont, Illinois 60018
(847) 823-0500

USER NAME = nhowellindgren	DESIGNED - BC	REVISED -	
	DRAWN - FPB	REVISED -	
	CHECKED - GMZ	REVISED -	
PLOT DATE = 2/6/2025	DATE -	REVISED -	

STATE OF ILLINOIS
DEPARTMENT OF TRANSPORTATION

TEMPORARY TRAFFIC SIGNAL INSTALLATION PLAN
IL ROUTE 38 AND I-39 SB ENT / EXIT RAMPS

SCALE: 1:40 | SHEET OF SHEETS | STA. TO STA.

F.A.P. RTE.	SECTION	COUNTY	TOTAL SHEETS	SHEET NO.
567	141-1HBR-3 & (9,10) R-3	OGLE	508	352

CONTRACT NO. 64N98

ILLINOIS | FED. AID PROJECT

TEMPORARY TRAFFIC SIGNAL LEGEND

- TEMPORARY SIGNAL CONTROLLER
- TEMPORARY SERVICE INSTALLATION
- TEMPORARY SIGNAL HEAD
- TEMPORARY WOOD POLE (CLASS 5 OR BETTER) 45' MIN.
- TEMPORARY SPAN WIRE, TETHER WIRE AND CABLE
- GUY WIRE
- TEMPORARY VIDEO DETECTION CAMERA
- TEMPORARY LED LUMINAIRE
- VIDEO DETECTION

SIGN LEGEND:

SIGN Ⓐ R3-1 36" x 36"

SIGN Ⓑ R3-2 36" x 36"

MOT STAGE 1B

N

0 20 40 60

SCALE IN FEET

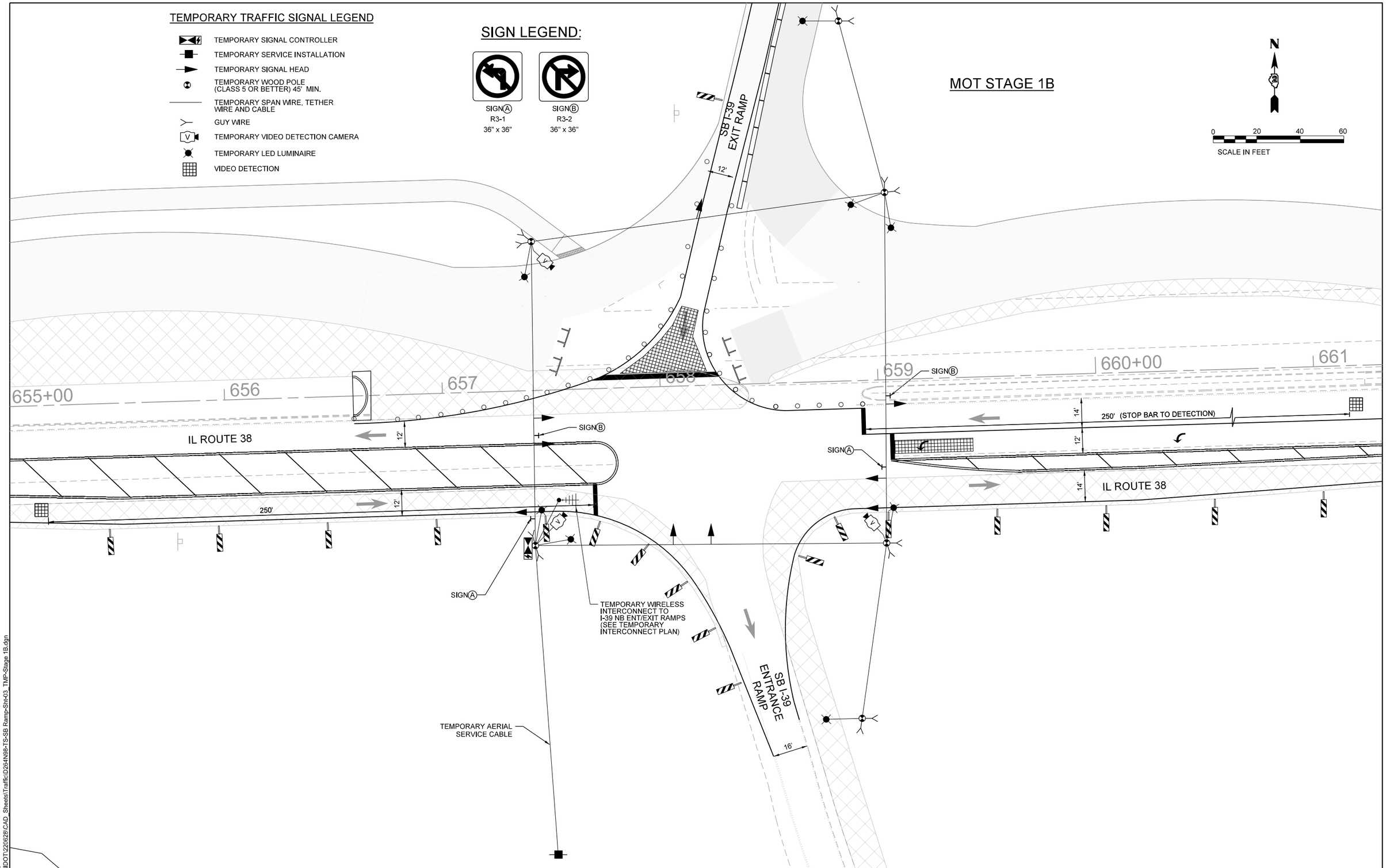

MODEL: Default
FILE NAME: N:\IDOT\220628\CAD_Sheets\Traffic\D264N98-TS-SB Ramp-Sht-03_TMP-Stage 1B.dgn

CHRISTOPHER B. BURKE ENGINEERING, LTD.
9575 W. Higgins Road, Suite 600
Rosemont, Illinois 60018
(847) 823-0500

USER NAME = nhowellindgren	DESIGNED - BC	REVISED -	
	DRAWN - FPB	REVISED -	
	CHECKED - GMZ	REVISED -	
PLOT DATE = 2/6/2025	DATE -	REVISED -	

STATE OF ILLINOIS
DEPARTMENT OF TRANSPORTATION

TEMPORARY TRAFFIC SIGNAL INSTALLATION PLAN
IL ROUTE 38 AND I-39 SB ENT / EXIT RAMPS

SCALE: 1:40 | SHEET OF SHEETS | STA. TO STA.

F.A.P. RTE.	SECTION	COUNTY	TOTAL SHEETS	SHEET NO.
567	141-1HBR-3 & (9,10) R-3	OGLE	508	353

CONTRACT NO. 64N98

ILLINOIS | FED. AID PROJECT

TEMPORARY TRAFFIC SIGNAL LEGEND

- TEMPORARY SIGNAL CONTROLLER
- TEMPORARY SERVICE INSTALLATION
- TEMPORARY SIGNAL HEAD
- TEMPORARY WOOD POLE (CLASS 5 OR BETTER) 45' MIN.
- TEMPORARY SPAN WIRE, TETHER WIRE AND CABLE
- GUY WIRE
- TEMPORARY VIDEO DETECTION CAMERA
- TEMPORARY LED LUMINAIRE
- VIDEO DETECTION

SIGN LEGEND:

SIGN Ⓐ R3-1 36" x 36"

SIGN Ⓑ R3-2 36" x 36"

MOT STAGE 1C

N

0 20 40 60

SCALE IN FEET

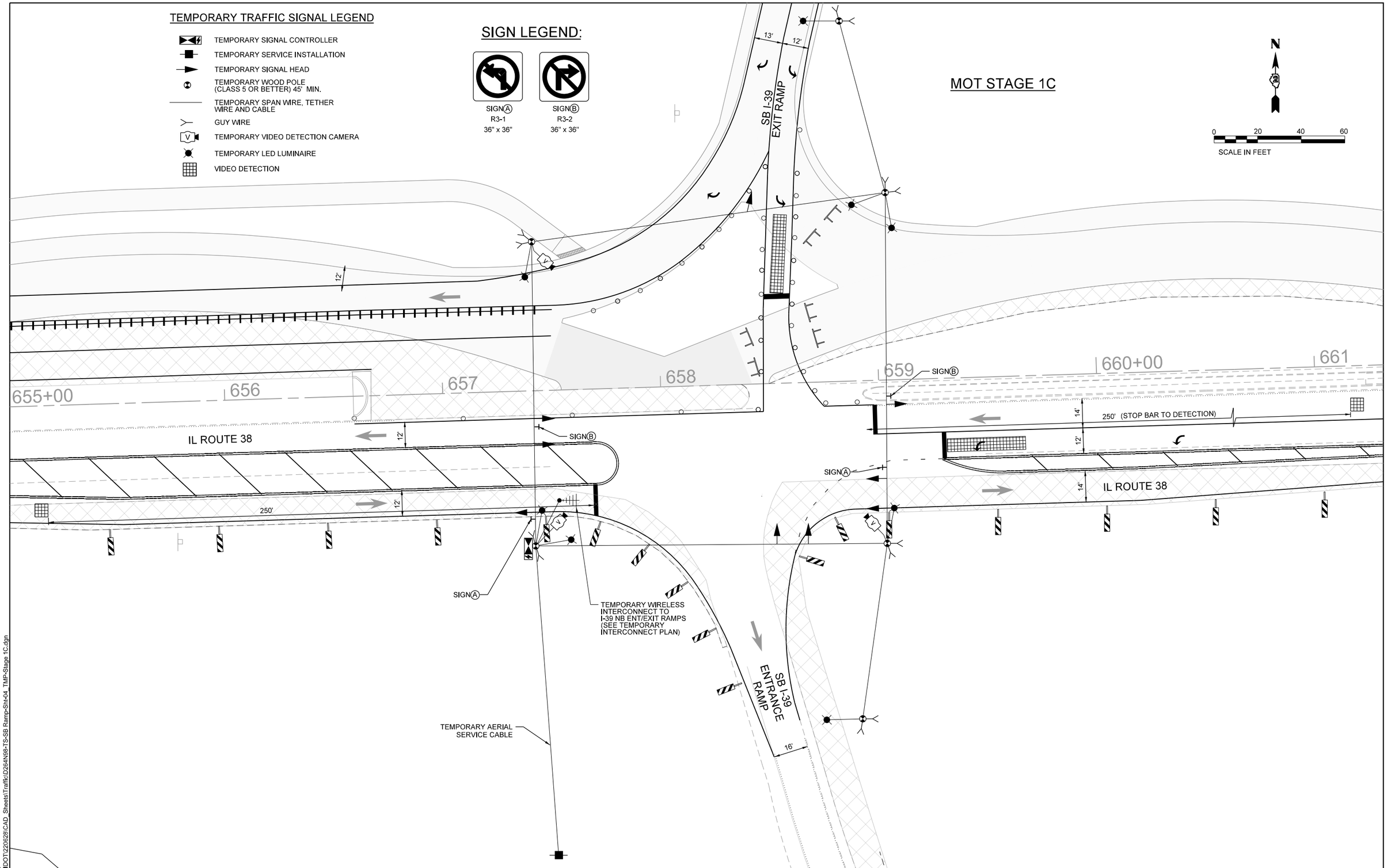

MODEL: Default
FILE NAME: N:\IDOT\220628\CAD_Sheets\Traffic\D284N98-TS-SB Ramp-Sht-04 TMP-Stage 1C.dgn

CHRISTOPHER B. BURKE ENGINEERING, LTD.
9575 W. Higgins Road, Suite 600
Rosemont, Illinois 60018
(847) 823-0500

USER NAME = nhowellilindgren	DESIGNED - BC	REVISED -	
	DRAWN - FPB	REVISED -	
	CHECKED - GMZ	REVISED -	
PLOT DATE = 2/6/2025	DATE -	REVISED -	

STATE OF ILLINOIS
DEPARTMENT OF TRANSPORTATION

TEMPORARY TRAFFIC SIGNAL INSTALLATION PLAN
IL ROUTE 38 AND I-39 SB ENT / EXIT RAMPS

SCALE: 1:40 | SHEET OF SHEETS | STA. TO STA.

F.A.P. RTE.	SECTION	COUNTY	TOTAL SHEETS	SHEET NO.
567	141-1HBR-3 & (9,10) R-3	OGLE	508	354
		CONTRACT NO. 64N98		
		ILLINOIS	FED. AID PROJECT	

TEMPORARY TRAFFIC SIGNAL LEGEND

- TEMPORARY SIGNAL CONTROLLER
- TEMPORARY SERVICE INSTALLATION
- TEMPORARY SIGNAL HEAD
- TEMPORARY WOOD POLE (CLASS 5 OR BETTER) 45' MIN.
- TEMPORARY SPAN WIRE, TETHER WIRE AND CABLE
- GUY WIRE
- TEMPORARY VIDEO DETECTION CAMERA
- TEMPORARY LED LUMINAIRE
- VIDEO DETECTION

SIGN LEGEND:

SIGN Ⓐ R3-1 36" x 36"

SIGN Ⓑ R3-2 36" x 36"

MOT STAGE 1D

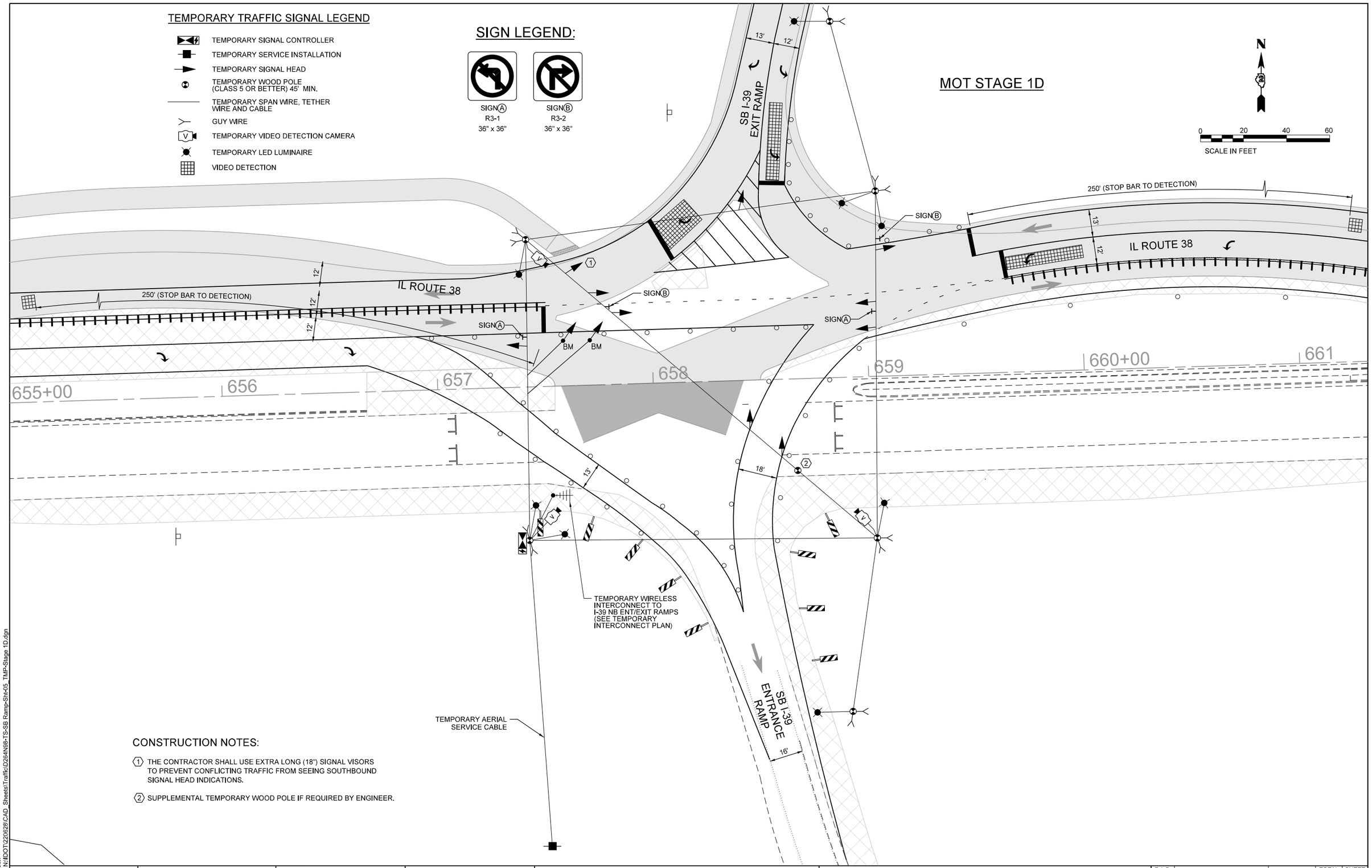

CONSTRUCTION NOTES:

1. THE CONTRACTOR SHALL USE EXTRA LONG (18") SIGNAL VISORS TO PREVENT CONFLICTING TRAFFIC FROM SEEING SOUTHBOUND SIGNAL HEAD INDICATIONS.
2. SUPPLEMENTAL TEMPORARY WOOD POLE IF REQUIRED BY ENGINEER.

MODEL: Default
FILE NAME: N:\IDOT\220628\CAD_Sheets\Traffic\D264N98-TS-SB Ramp-Sht-05_TMP-Stage 1D.dgn

CHRISTOPHER B. BURKE ENGINEERING, LTD.
9575 W. Higgins Road, Suite 600
Rosemont, Illinois 60018
(847) 823-0500

USER NAME = nhowellindgren	DESIGNED - BC	REVISED -	
	DRAWN - FPB	REVISED -	
	CHECKED - GMZ	REVISED -	
PLOT DATE = 2/6/2025	DATE -	REVISED -	

STATE OF ILLINOIS
DEPARTMENT OF TRANSPORTATION

TEMPORARY TRAFFIC SIGNAL INSTALLATION PLAN
IL ROUTE 38 AND I-39 SB ENT / EXIT RAMPS

SCALE: 1:40 | SHEET OF SHEETS | STA. TO STA.

F.A.P. RTE.	SECTION	COUNTY	TOTAL SHEETS	SHEET NO.
567	141-1HBR-3 & (9,10) R-3	OGLE	508	355
		CONTRACT NO. 64N98		
		ILLINOIS	FED. AID PROJECT	

TEMPORARY TRAFFIC SIGNAL LEGEND

- TEMPORARY SIGNAL CONTROLLER
- TEMPORARY SERVICE INSTALLATION
- TEMPORARY SIGNAL HEAD
- TEMPORARY WOOD POLE (CLASS 5 OR BETTER) 45' MIN.
- TEMPORARY SPAN WIRE, TETHER WIRE AND CABLE
- GUY WIRE
- TEMPORARY VIDEO DETECTION CAMERA
- TEMPORARY LED LUMINAIRE
- VIDEO DETECTION

SIGN LEGEND:

SIGN Ⓐ R3-1 36" x 36"

SIGN Ⓑ R3-2 36" x 36"

MOT STAGE 2A

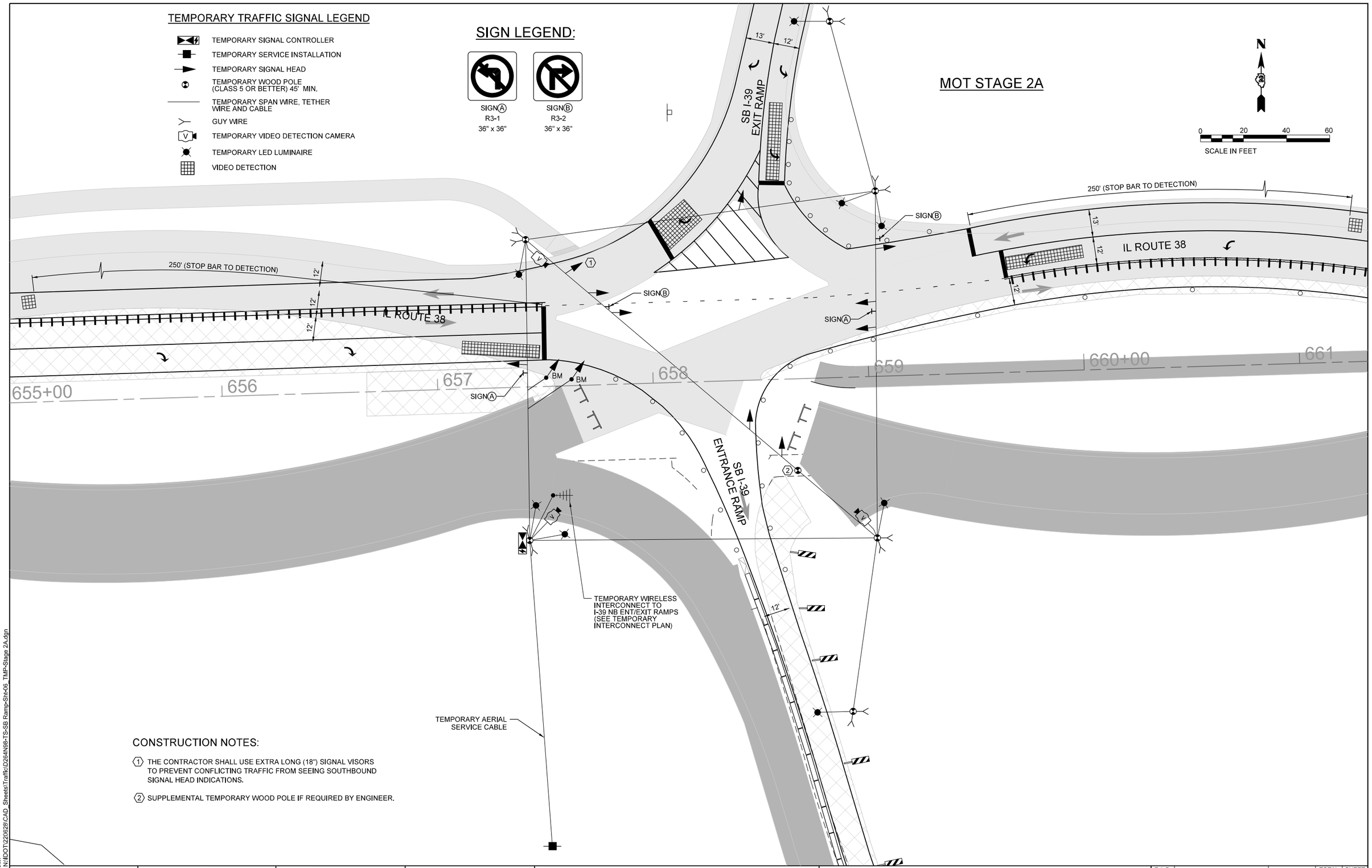

CONSTRUCTION NOTES:

1. THE CONTRACTOR SHALL USE EXTRA LONG (18") SIGNAL VISORS TO PREVENT CONFLICTING TRAFFIC FROM SEEING SOUTHBOUND SIGNAL HEAD INDICATIONS.
2. SUPPLEMENTAL TEMPORARY WOOD POLE IF REQUIRED BY ENGINEER.

MODEL: Default
FILE NAME: N:\DOT\220\628\CAD Sheets\Traffic\D264N98-TS-SB Ramp-Sh-06 TMP-Stage 2A.dgn

CHRISTOPHER B. BURKE ENGINEERING, LTD.
9575 W. Higgins Road, Suite 600
Rosemont, Illinois 60018
(847) 823-0500

USER NAME = nhowellindgren	DESIGNED - BC	REVISED -	
	DRAWN - FPB	REVISED -	
	CHECKED - GMZ	REVISED -	
PLOT DATE = 2/6/2025	DATE -	REVISED -	

STATE OF ILLINOIS
DEPARTMENT OF TRANSPORTATION

TEMPORARY TRAFFIC SIGNAL INSTALLATION PLAN
IL ROUTE 38 AND I-39 SB ENT / EXIT RAMPS

SCALE: 1:40 | SHEET OF SHEETS | STA. TO STA.

F.A.P. RTE.	SECTION	COUNTY	TOTAL SHEETS	SHEET NO.
567	141-1HBR-3 & (9,10) R-3	OGLE	508	356

CONTRACT NO. 64N98

ILLINOIS | FED. AID PROJECT

TEMPORARY TRAFFIC SIGNAL LEGEND

- TEMPORARY SIGNAL CONTROLLER
- TEMPORARY SERVICE INSTALLATION
- TEMPORARY SIGNAL HEAD
- TEMPORARY WOOD POLE (CLASS 5 OR BETTER) 45' MIN.
- TEMPORARY SPAN WIRE, TETHER WIRE AND CABLE
- GUY WIRE
- TEMPORARY VIDEO DETECTION CAMERA
- TEMPORARY LED LUMINAIRE
- VIDEO DETECTION

SIGN LEGEND:

SIGN Ⓐ R3-1 36" x 36"

SIGN Ⓑ R3-2 36" x 36"

MOT STAGE 2B

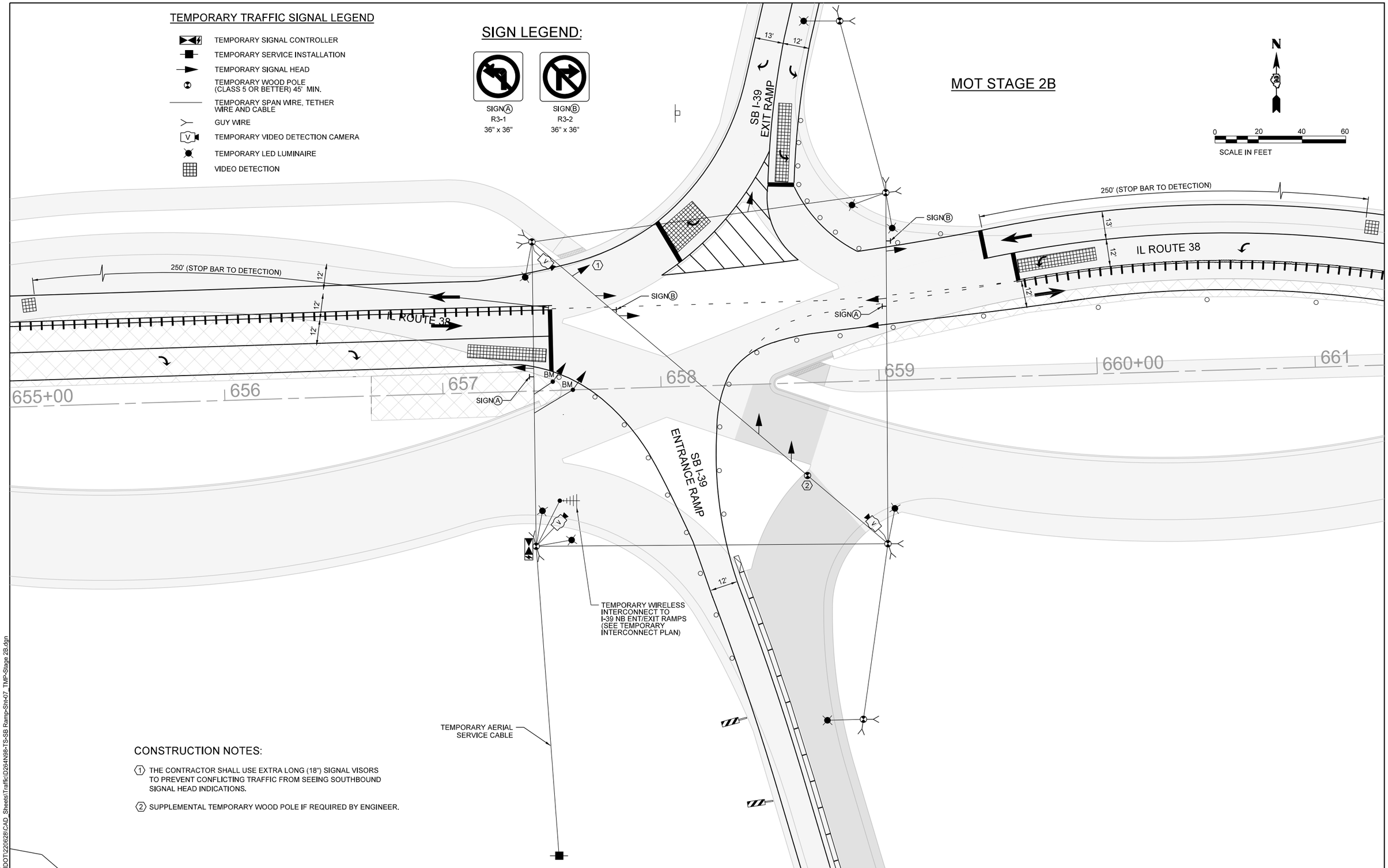

CONSTRUCTION NOTES:

1. THE CONTRACTOR SHALL USE EXTRA LONG (18") SIGNAL VISORS TO PREVENT CONFLICTING TRAFFIC FROM SEEING SOUTHBOUND SIGNAL HEAD INDICATIONS.
2. SUPPLEMENTAL TEMPORARY WOOD POLE IF REQUIRED BY ENGINEER.

MODEL: Default
FILE NAME: N:\IDOT\220628\CAD_Sheets\Traffic\D264N98-TS-SB Ramp-Sht-07_TMP-Stage 2B.dgn

CHRISTOPHER B. BURKE ENGINEERING, LTD.
9575 W. Higgins Road, Suite 600
Rosemont, Illinois 60018
(847) 823-0500

USER NAME = nhowellindgren	DESIGNED - BC	REVISED -	
	DRAWN - FPB	REVISED -	
	CHECKED - GMZ	REVISED -	
PLOT DATE = 2/6/2025	DATE -	REVISED -	

STATE OF ILLINOIS
DEPARTMENT OF TRANSPORTATION

TEMPORARY TRAFFIC SIGNAL INSTALLATION PLAN
IL ROUTE 38 AND I-39 SB ENT / EXIT RAMPS

SCALE: 1:40 | SHEET OF SHEETS | STA. TO STA.

F.A.P. RTE.	SECTION	COUNTY	TOTAL SHEETS	SHEET NO.
567	141-1HBR-3 & (9,10) R-3	OGLE	508	357

CONTRACT NO. 64N98

ILLINOIS | FED. AID PROJECT

TEMPORARY TRAFFIC SIGNAL LEGEND

- TEMPORARY SIGNAL CONTROLLER
- TEMPORARY SERVICE INSTALLATION
- TEMPORARY SIGNAL HEAD
- TEMPORARY WOOD POLE (CLASS 5 OR BETTER) 45' MIN.
- TEMPORARY SPAN WIRE, TETHER WIRE AND CABLE
- GUY WIRE
- TEMPORARY VIDEO DETECTION CAMERA
- TEMPORARY LED LUMINAIRE
- VIDEO DETECTION
- TEMPORARY PEDESTRIAN SIGNAL
- TEMPORARY PUSHBUTTON
- BM BARREL MOUNTED SIGNAL POST

MOT FINAL CONDITION

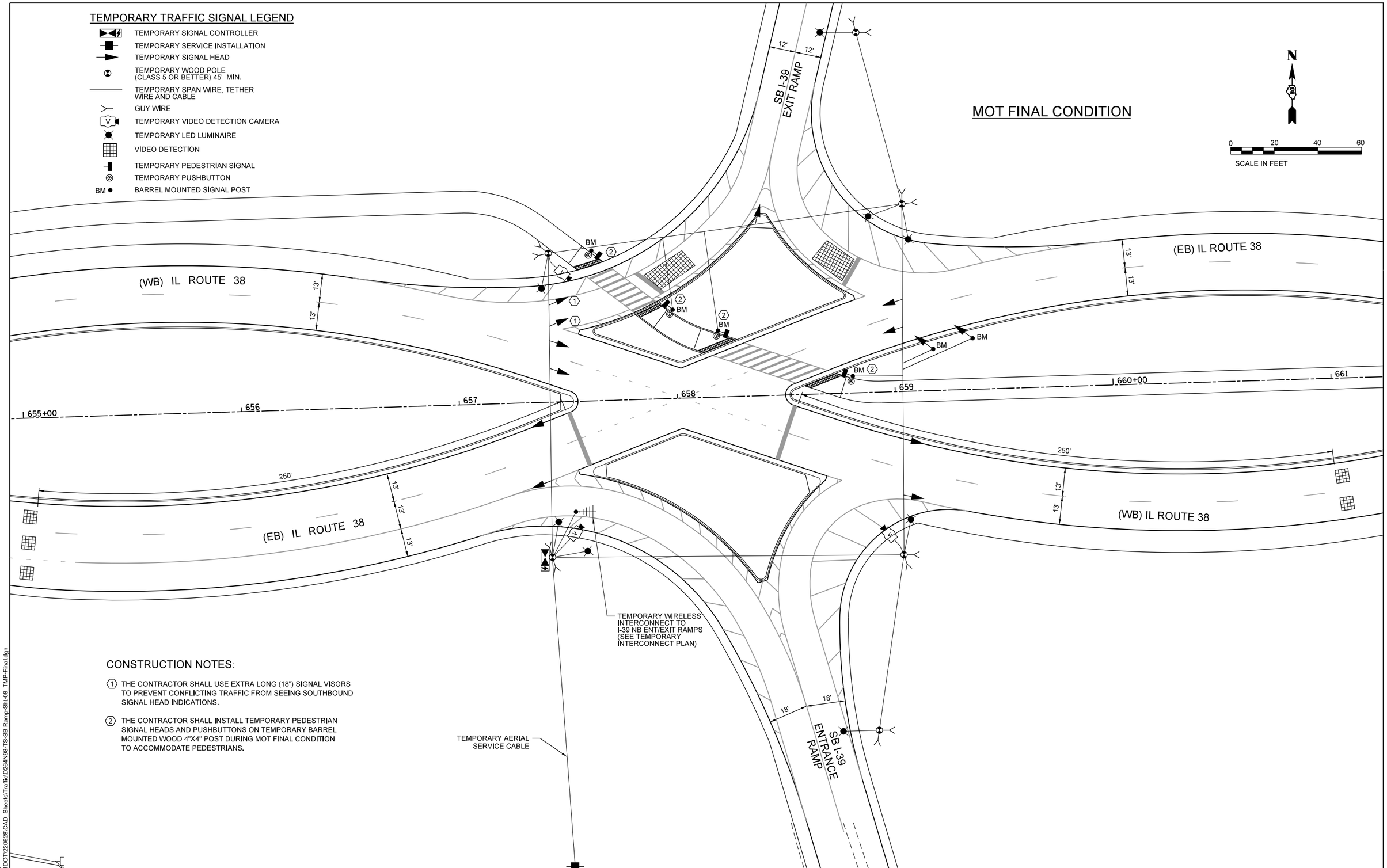

CONSTRUCTION NOTES:

1. THE CONTRACTOR SHALL USE EXTRA LONG (18") SIGNAL VISORS TO PREVENT CONFLICTING TRAFFIC FROM SEEING SOUTHBOUND SIGNAL HEAD INDICATIONS.
2. THE CONTRACTOR SHALL INSTALL TEMPORARY PEDESTRIAN SIGNAL HEADS AND PUSHBUTTONS ON TEMPORARY BARREL MOUNTED WOOD 4"X4" POST DURING MOT FINAL CONDITION TO ACCOMMODATE PEDESTRIANS.

MODEL: Default
FILE NAME: N:\IDOT\220628\CAD_Sheets\Traffic\D264N98-TS-SB Ramp-Sht-08_TMP-Final.dgn

CHRISTOPHER B. BURKE ENGINEERING, LTD.
9575 W. Higgins Road, Suite 600
Rosemont, Illinois 60018
(847) 823-0500

USER NAME = nhowellindgren	DESIGNED - BC	REVISED -	
	DRAWN - FPB	REVISED -	
	CHECKED - GMZ	REVISED -	
PLOT DATE = 2/6/2025	DATE -	REVISED -	

STATE OF ILLINOIS
DEPARTMENT OF TRANSPORTATION

TEMPORARY TRAFFIC SIGNAL INSTALLATION PLAN
IL ROUTE 38 AND I-39 SB ENT / EXIT RAMPS

SCALE: 1:40 | SHEET OF SHEETS | STA. TO STA.

F.A.P. RTE.	SECTION	COUNTY	TOTAL SHEETS	SHEET NO.
567	141-1HBR-3 & (9,10) R-3	OGLE	508	358

CONTRACT NO. 64N98

ILLINOIS | FED. AID PROJECT

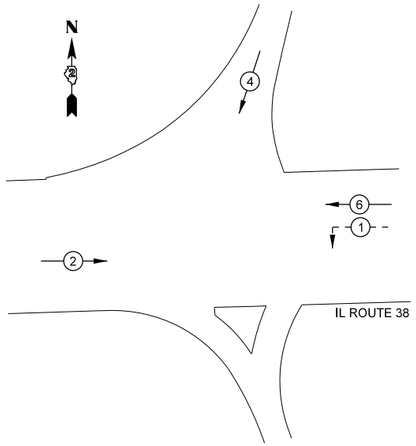

PROPOSED
CONTROLLER SEQUENCE

6 NUMBER REFERS TO ASSOCIATED PHASE

LEGEND:

- PROTECTED PHASE
- PROTECTED/PERMITTED PHASE
- PEDESTRIAN PHASE
- OL OVERLAP

TEMPORARY SIGNAL CABLE LEGEND

- TEMPORARY SIGNAL CONTROLLER
- TEMPORARY SERVICE INSTALLATION
- DIRECTIONAL SIGNAL SECTION, 12"
- R TEMPORARY SIGNAL SECTION, 12"
- 3 ELECTRIC CABLE DENOTING NUMBER OF CONDUCTORS
- V VENDOR CABLE
- TEMPORARY WOOD POLE
- V TEMPORARY VIDEO DETECTION CAMERA
- TEMPORARY LED LUMINAIRE

CONSTRUCTION NOTES:

1. THE CONTRACTOR SHALL USE EXTRA LONG (18") SIGNAL VISORS TO PREVENT CONFLICTING TRAFFIC FROM SEEING SOUTHBOUND SIGNAL HEAD INDICATIONS.
2. SUPPLEMENTAL TEMPORARY LIGHTING POLES ARE INCLUDED IN THE UNIT COST OF PAY ITEM: TEMPORARY TRAFFIC SIGNAL INSTALLATION. SEE SPECIAL PROVISION FOR MORE INFORMATION.

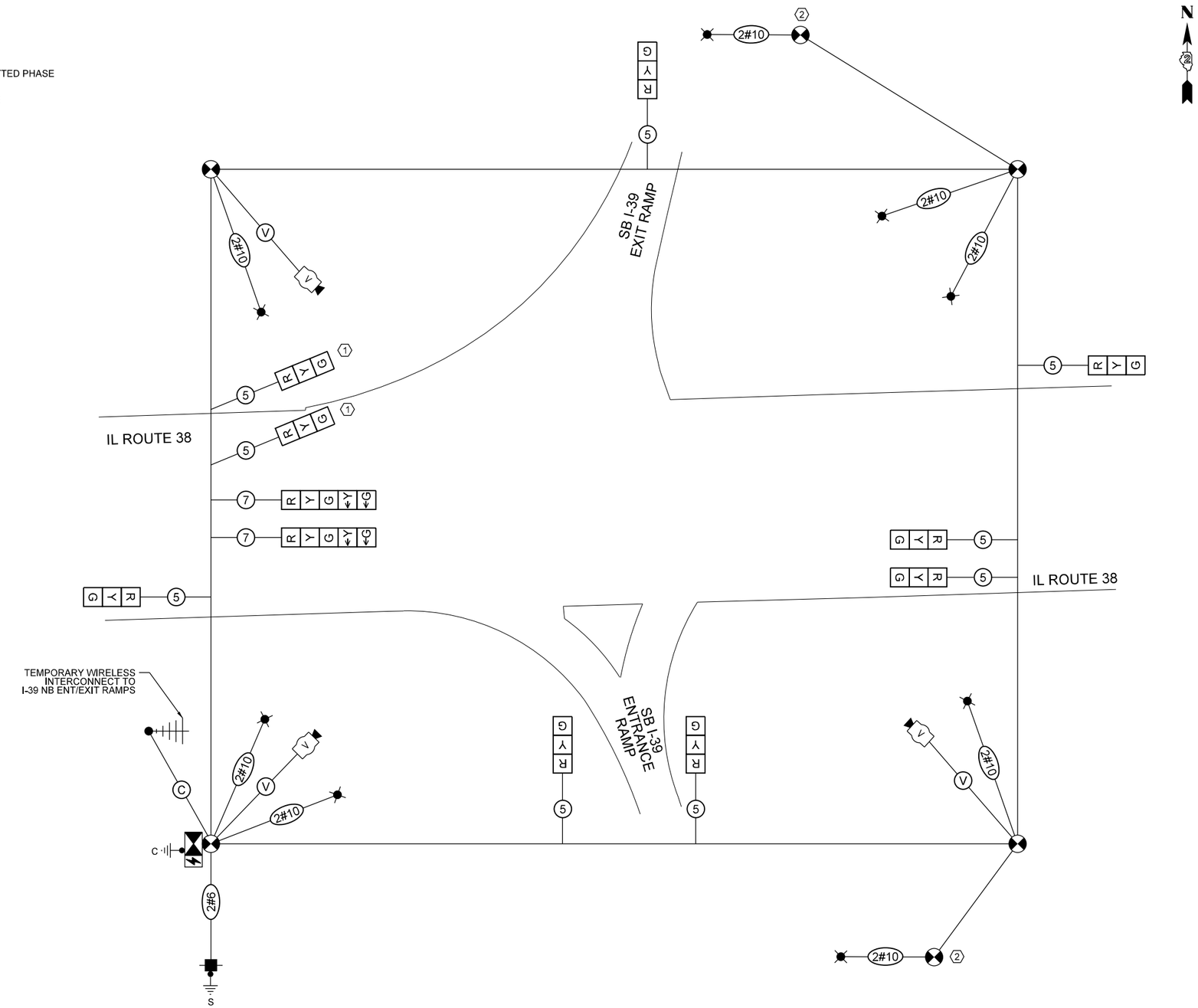

MOT EXISTING CONDITION

TEMPORARY CABLE PLAN

NOT TO SCALE

MODEL: Default
FILE NAME: N:\DOT\220628\CAD_Sheets\Traffic\D264N98-TS-SB Ramp-Sht-09_TMP-CAB1.dgn

CHRISTOPHER B. BURKE ENGINEERING, LTD. 9575 W. Higgins Road, Suite 600 Rosemont, Illinois 60018 (847) 823-0500	USER NAME = nhowellilindgren	DESIGNED - BC	REVISED -	STATE OF ILLINOIS DEPARTMENT OF TRANSPORTATION	TRAFFIC SIGNAL PLANS TEMPORARY CABLE PLAN IL ROUTE 38 AND I-39 SB ENT / EXIT RAMPS	F.A.P. RTE.	SECTION	COUNTY	TOTAL SHEETS / SHEET NO.
		DRAWN - FPB	REVISED -			567	141-1HBR-3 & (9,10) R-3	OGLE	508 / 359
		CHECKED - GMZ	REVISED -			CONTRACT NO. 64N98			
	PLOT DATE = 2/6/2025	DATE -	REVISED -		SCALE: 1:40 SHEET OF SHEETS STA. TO STA.	ILLINOIS FED. AID PROJECT			

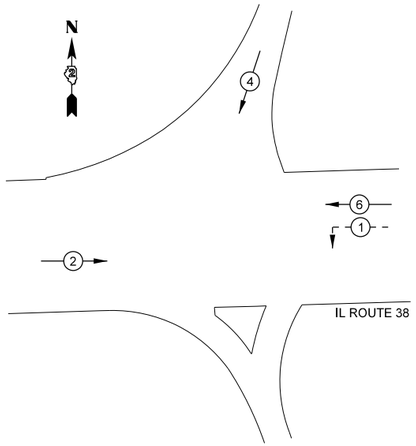

PROPOSED
CONTROLLER SEQUENCE

6 NUMBER REFERS TO ASSOCIATED PHASE

LEGEND:

- PROTECTED PHASE
- PROTECTED/PERMITTED PHASE
- PEDESTRIAN PHASE
- OL OVERLAP

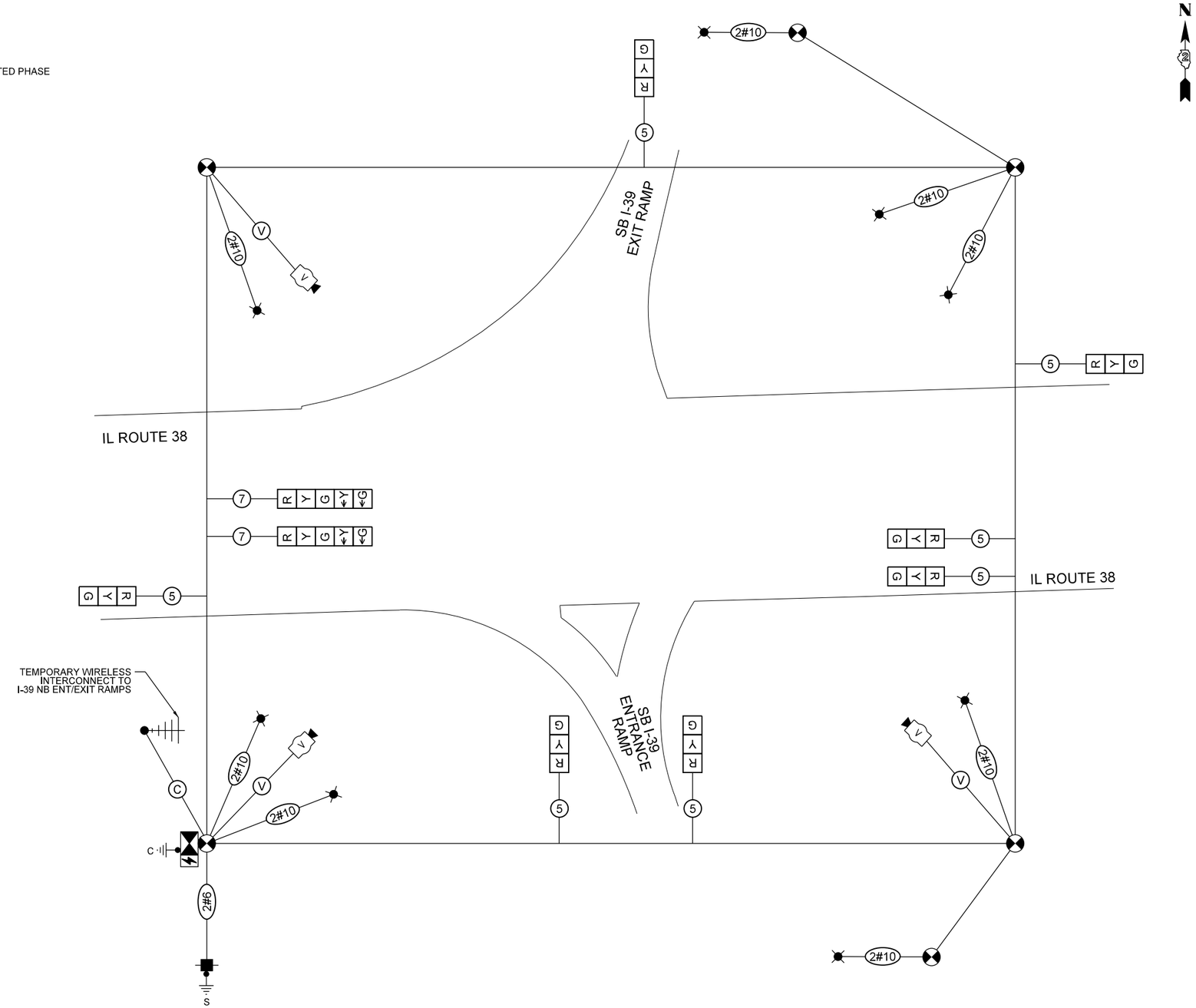

TEMPORARY SIGNAL CABLE LEGEND

- TEMPORARY SIGNAL CONTROLLER
- TEMPORARY SERVICE INSTALLATION
- G DIRECTIONAL SIGNAL SECTION, 12"
- R TEMPORARY SIGNAL SECTION, 12"
- 3 ELECTRIC CABLE DENOTING NUMBER OF CONDUCTORS
- V VENDOR CABLE
- TEMPORARY WOOD POLE
- V TEMPORARY VIDEO DETECTION CAMERA
- TEMPORARY LED LUMINAIRE

MOT STAGE 1A AND MOT STAGE 1B,
AND MOT STAGE 1C

TEMPORARY CABLE PLAN

NOT TO SCALE

MODEL: Default
FILE NAME: N:\DOT\220628\CAD_Sheets\Traffic\D264N98-TS-SB Ramp-Sht-10_TMP-CAB2.dgn

CHRISTOPHER B. BURKE ENGINEERING, LTD.
9575 W. Higgins Road, Suite 600
Rosemont, Illinois 60018
(847) 823-0500

USER NAME = nhowellilindgren	DESIGNED - BC	REVISED -	
	DRAWN - FPB	REVISED -	
	CHECKED - GMZ	REVISED -	
PLOT DATE = 2/6/2025	DATE -	REVISED -	

STATE OF ILLINOIS
DEPARTMENT OF TRANSPORTATION

TRAFFIC SIGNAL PLANS
TEMPORARY CABLE PLAN
IL ROUTE 38 AND I-39 SB ENT / EXIT RAMPS

SCALE: 1:40 | SHEET OF SHEETS | STA. TO STA.

F.A.P. RTE.	SECTION	COUNTY	TOTAL SHEETS	SHEET NO.
567	141-1HBR-3 & (9,10) R-3	OGLE	508	360

CONTRACT NO. 64N98

ILLINOIS | FED. AID PROJECT

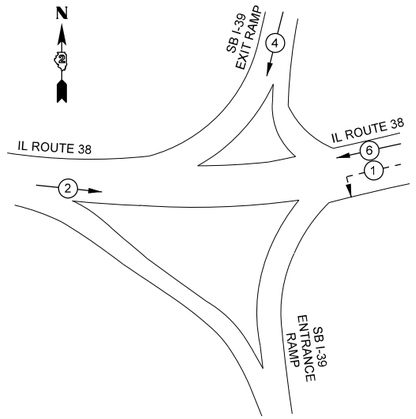

PROPOSED CONTROLLER SEQUENCE

NUMBER REFERS TO ASSOCIATED PHASE

LEGEND:

- PROTECTED PHASE
- PROTECTED/PERMITTED PHASE
- PEDESTRIAN PHASE
- OL — OVERLAP

TEMPORARY SIGNAL CABLE LEGEND

- TEMPORARY SIGNAL CONTROLLER
- TEMPORARY SERVICE INSTALLATION
- G — DIRECTIONAL SIGNAL SECTION, 12"
- R — TEMPORARY SIGNAL SECTION, 12"
- 3 — ELECTRIC CABLE DENOTING NUMBER OF CONDUCTORS
- V — VENDOR CABLE
- TEMPORARY WOOD POLE
- V — TEMPORARY VIDEO DETECTION CAMERA
- TEMPORARY LED LUMINAIRE

CONSTRUCTION NOTES:

1. THE CONTRACTOR SHALL USE EXTRA LONG (18") SIGNAL VISORS TO PREVENT CONFLICTING TRAFFIC FROM SEEING SOUTHBOUND SIGNAL HEAD INDICATIONS.
2. SUPPLEMENTAL TEMPORARY WOOD POLE IF REQUIRED BY ENGINEER.

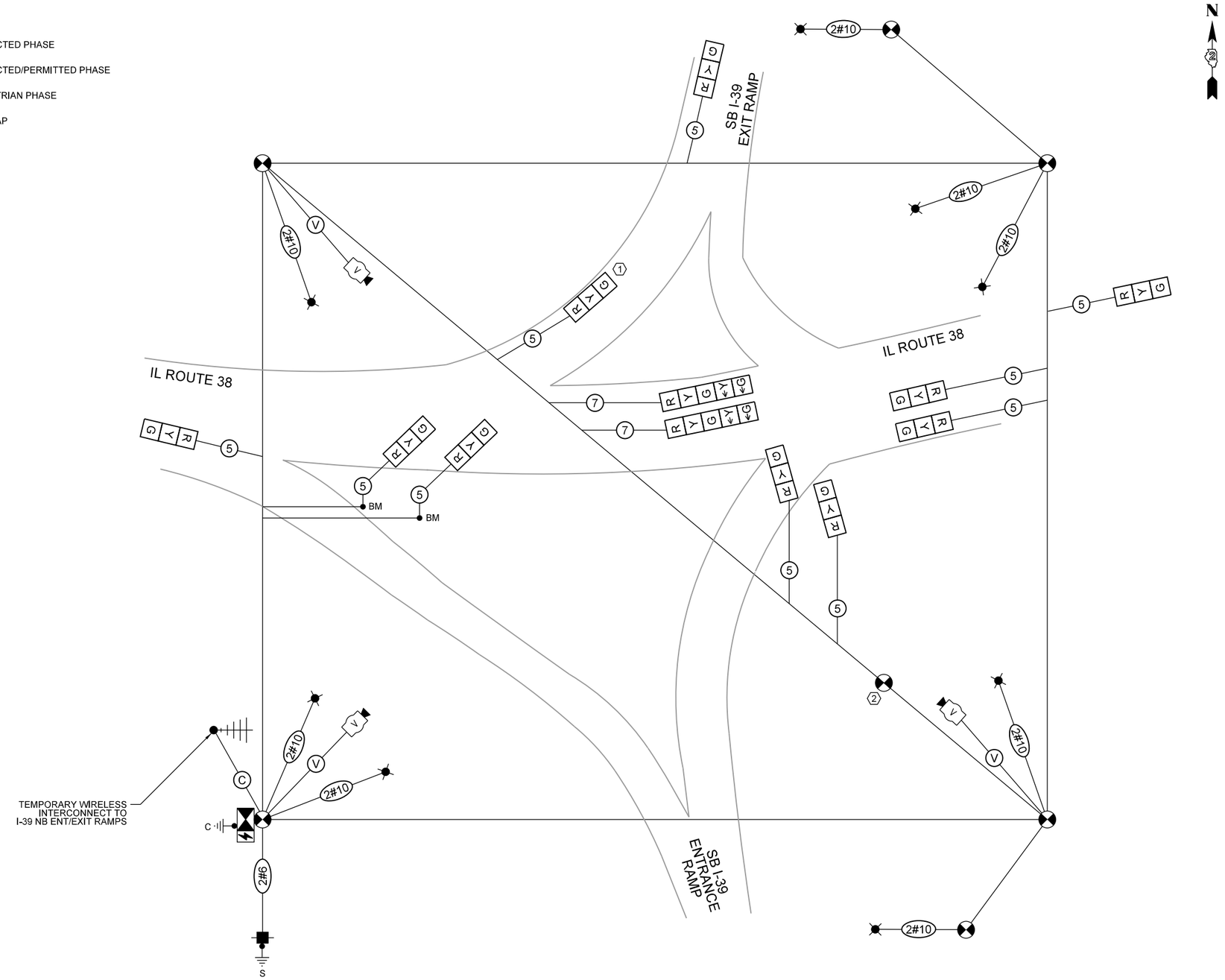

MOT STAGE 1D, MOT STAGE 2A, AND MOT STAGE 2B

TEMPORARY CABLE PLAN

NOT TO SCALE

MODEL: Default
FILE NAME: N:\IDOT\220628\CAD_Sheets\Traffic\D264N98-TS-SB Ramp-Sht-11_TMP-CAB3.dgn

CHRISTOPHER B. BURKE ENGINEERING, LTD.
9575 W. Higgins Road, Suite 600
Rosemont, Illinois 60018
(847) 823-0500

USER NAME = nhowellindgren	DESIGNED - BC	REVISED -	
	DRAWN - FPB	REVISED -	
	CHECKED - GMZ	REVISED -	
PLOT DATE = 2/6/2025	DATE -	REVISED -	

STATE OF ILLINOIS
DEPARTMENT OF TRANSPORTATION

TRAFFIC SIGNAL PLANS
TEMPORARY CABLE PLAN
IL ROUTE 38 AND I-39 SB ENT / EXIT RAMPS

SCALE: 1:40 | SHEET OF SHEETS | STA. TO STA.

F.A.P. RTE.	SECTION	COUNTY	TOTAL SHEETS	SHEET NO.
567	141-1HBR-3 & (9,10) R-3	OGLE	508	361
		CONTRACT NO. 64N98		
		ILLINOIS	FED. AID PROJECT	

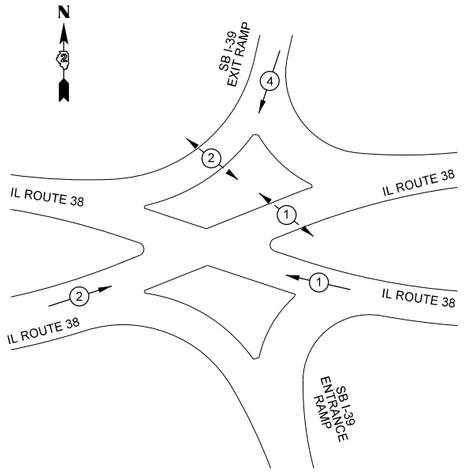

PROPOSED CONTROLLER SEQUENCE

(6) NUMBER REFERS TO ASSOCIATED PHASE

LEGEND:

- PROTECTED PHASE
- PROTECTED/PERMITTED PHASE
- PEDESTRIAN PHASE
- OL OVERLAP

TEMPORARY SIGNAL CABLE LEGEND

- TEMPORARY SIGNAL CONTROLLER
- TEMPORARY SERVICE INSTALLATION
- G DIRECTIONAL SIGNAL SECTION, 12"
- R TEMPORARY SIGNAL SECTION, 12"
- (3) ELECTRIC CABLE DENOTING NUMBER OF CONDUCTORS
- (V) VENDOR CABLE
- TEMPORARY WOOD POLE
- V TEMPORARY VIDEO DETECTION CAMERA
- TEMPORARY LED LUMINAIRE

CONSTRUCTION NOTES:

1. THE CONTRACTOR SHALL USE EXTRA LONG (18") SIGNAL VISORS TO PREVENT CONFLICTING TRAFFIC FROM SEEING SOUTHBOUND SIGNAL HEAD INDICATIONS.
2. THE CONTRACTOR SHALL INSTALL TEMPORARY PEDESTRIAN SIGNAL HEADS AND PUSHBUTTONS ON TEMPORARY BARREL MOUNTED WOOD 4"X4" POST DURING MOT FINAL CONDITION TO ACCOMMODATE PEDESTRIANS.
3. THE CONTRACTOR SHALL BAG AND DISABLE THE YELLOW AND GREEN LEFT ARROW INDICATION DURING MOT FINAL CONDITION.

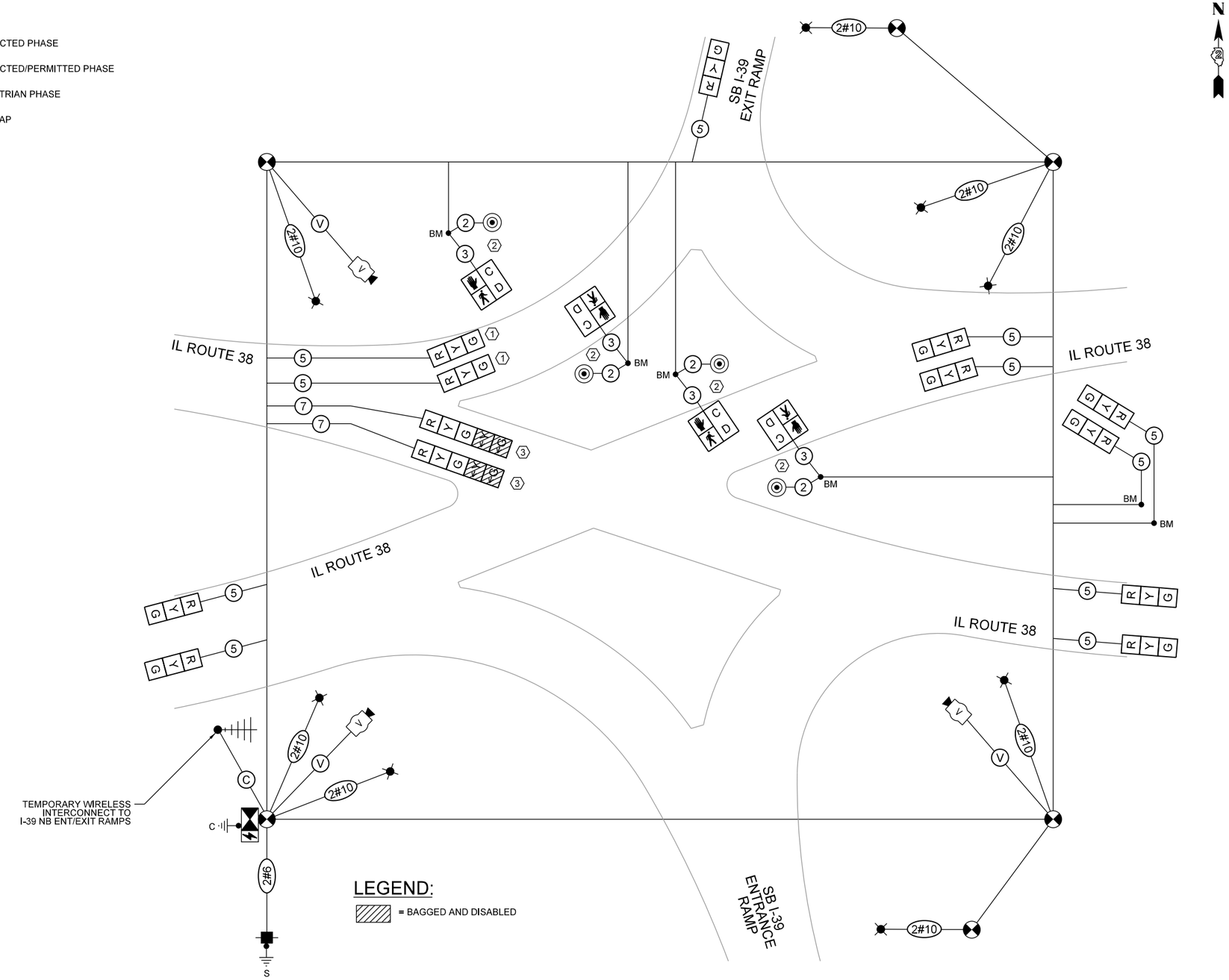

LEGEND:

= BAGGED AND DISABLED

MOT FINAL CONDITION
TEMPORARY CABLE PLAN

NOT TO SCALE

MODEL: Default
FILE NAME: N:\IDOT\220628\CAD_Sheets\Traffic\D264N98-TS-SB Ramp-Sht-12_TMP-CAB4.dgn

CHRISTOPHER B. BURKE ENGINEERING, LTD.
9575 W. Higgins Road, Suite 600
Rosemont, Illinois 60018
(847) 823-0500

USER NAME = nhowellindgren	DESIGNED - BC	REVISED -	
	DRAWN - FPB	REVISED -	
	CHECKED - GMZ	REVISED -	
PLOT DATE = 2/6/2025	DATE -	REVISED -	

STATE OF ILLINOIS
DEPARTMENT OF TRANSPORTATION

TRAFFIC SIGNAL PLANS
TEMPORARY CABLE PLAN
IL ROUTE 38 AND I-39 SB ENT / EXIT RAMPS

SCALE: 1:40 | SHEET OF SHEETS | STA. TO STA.

F.A.P. RTE.	SECTION	COUNTY	TOTAL SHEETS	SHEET NO.
567	141-1HBR-3 & (9,10) R-3	OGLE	508	362
		CONTRACT NO. 64N98		
		ILLINOIS	FED. AID PROJECT	

NOTE:
FOR COMBINATION LIGHTING AT THE INTERSECTION, SEE LIGHTING PLANS FOR LUMINAIRES AND CABLING TO THE TRAFFIC SIGNAL CONTROLLER.

INSTALLATION OF THE LIGHTING UNIT DUCT AND THE TRAFFIC SIGNAL CONDUIT SHALL BE COORDINATED AND INSTALLED IN A COMMON TRENCH WHERE APPLICABLE.

N

0 20 40 60
SCALE IN FEET

44' - UNDRGRD C PVC 2
12' - UNDRGRD C PVC 2
93' - UNDRGRD C PVC 4
47' - UNDRGRD C PVC 2
SB I-39 EXIT RAMP
12' 12'
TSP-18
APS-14
PH-14
29' - UNDRGRD C PVC 2
28' - UNDRGRD C PVC 2
42' - UNDRGRD C PVC 2 1/2
HH-11
PH-13
TSP-17
50' (TYP)
9' (TYP)
HH-9
12' - UNDRGRD C PVC 2
TSP-15
HH-10
TSP-14
TSP-16
PH-12
DHH-5
43' - UNDRGRD C PVC 3
MA-12 34'
MA-13 30'
MA-11 32'
MA-10 30'
APS-13
APS-12
(2) 47' - UNDRGRD C PVC 4
5' - UNDRGRD C PVC 2 1/2
DHH-6
PH-11
TSP-13
12' - UNDRGRD C PVC 2
DHH-4
APS-11
62' - UNDRGRD C PVC 2 1/2
18' - UNDRGRD C PVC 2 1/2
HH-8
54' - UNDRGRD C PVC 2
TSP-19
DHH-7
UPS
TSP-20
10' - UNDRGRD C PVC 2
HH-12
75' - UNDRGRD C PVC 2
(2) 91' - UNDRGRD C PVC 4
(2) 12' - UNDRGRD C PVC 4
PROPOSED SERVICE INSTALLATION
STA. 657+92.73, 113.90' RT
75'-UNDRGRD C PVC 2
TO PROPOSED
SERVICE INSTALLATION
530' - UNDRGRD C PVC 2
PROPOSED INTERCONNECT TO DEMENT ROAD
16' - UNDRGRD C PVC 2
55' - UNDRGRD C PVC 3 1/2
TSP-12
(2) 12' - UNDRGRD C PVC 4
FULL-ACTUATED CONTROLLER
AND TYPE SUPER R CABINET
CONCRETE FOUNDATION TYPE C
STA. 658+23.5, 45.2' RT
PROPOSED INTERCONNECT
TO I-39 NB ENT / EXIT RAMPS
SB I-39 ENTRANCE RAMP
18' 18'
(WB) IL ROUTE 38
(EB) IL ROUTE 38
(EB) IL ROUTE 38
(WB) IL ROUTE 38
13' 13'
250'
250'
655+00
656
657
658
659
660+00
661
39°
137°
142°
81°

SIGNAL HEAD WITH BACKPLATE

SIGNAL HEAD WITHOUT BACKPLATE

TRAFFIC SIGNAL LEGEND

EXISTING	PROPOSED	
		SIGNAL HEAD WITH BACKPLATE
		SIGNAL HEAD WITHOUT BACKPLATE
		HANDHOLE, PCC
		DOUBLE HANDHOLE, PCC
		JUNCTION BOX
		CONDUIT
		STEEL MAST ARM ASSEMBLY AND POLE
		STEEL COMBINATION MAST ARM ASSEMBLY AND POLE WITH LUMINAIRE (LENGTH SPECIFIED)
		TRAFFIC SIGNAL POST
		SERVICE POLE
		CONTROLLER CABINET WITH CONCRETE FOUNDATION
		TRAFFIC SIGNAL VIDEO DETECTOR SYSTEM
		TRAFFIC SIGNAL PEDESTRIAN SIGNAL HEAD
		TRAFFIC SIGNAL PEDESTRIAN PUSH BUTTON -(APS) ACCESSIBLE PEDESTRIAN PUSH-BUTTON
		SIGN
UPS	UPS	UNINTERRUPTABLE POWER SUPPLY

MODEL: Default
FILE NAME: N:\IDOT\220628\CAD_Sheets\Traffic\D264N98-TS-SB Ramp-Sht-13_MOD.dgn

CHRISTOPHER B. BURKE ENGINEERING, LTD.
9575 W. Higgins Road, Suite 600
Rosemont, Illinois 60018
(847) 823-0500

USER NAME = nhowellindgren	DESIGNED - BC	REVISED -	
	DRAWN - FPB	REVISED -	
	CHECKED - GMZ	REVISED -	
PLOT DATE = 2/6/2025	DATE -	REVISED -	

STATE OF ILLINOIS
DEPARTMENT OF TRANSPORTATION

TRAFFIC SIGNAL PLANS
IL ROUTE 38 AND I-39 SB ENT / EXIT RAMPS

SCALE: 1:40 | SHEET OF SHEETS | STA. TO STA.

F.A.P. RTE.	SECTION	COUNTY	TOTAL SHEETS	SHEET NO.
567	141-1HBR-3 & (9,10) R-3	OGLE	508	363
		CONTRACT NO. 64N98		
		ILLINOIS FED. AID PROJECT		

PROPOSED TRAFFIC SIGNAL LEGEND (SHEET DETAILS)

- (5) ELECTRIC CABLE DENOTING NUMBER OF CONDUCTORS
- SIGNAL FACE WITH BACKPLATE
- SIGNAL FACE WITHOUT BACKPLATE
- G — DIRECTIONAL SIGNAL SECTION
- R — SIGNAL SECTION 12"
- C / D — WALK/DON'T WALK SECTION + COUNT DOWN
- P — GROUND WIRE (POLE)
- MA — GROUND WIRE (MAST ARM)
- APS — PROPOSED TRAFFIC SIGNAL PEDESTRIAN PUSH BUTTON -(APS) ACCESSIBLE PEDESTRIAN PUSH-BUTTON
- V — VIDEO DETECTION CAMERA
- (V) — VENDOR CABLE
- UPS — UNINTERRUPTABLE POWER SUPPLY
- CONTROLLER CABINET
- TRAFFIC SIGNAL SERVICE INSTALLATION

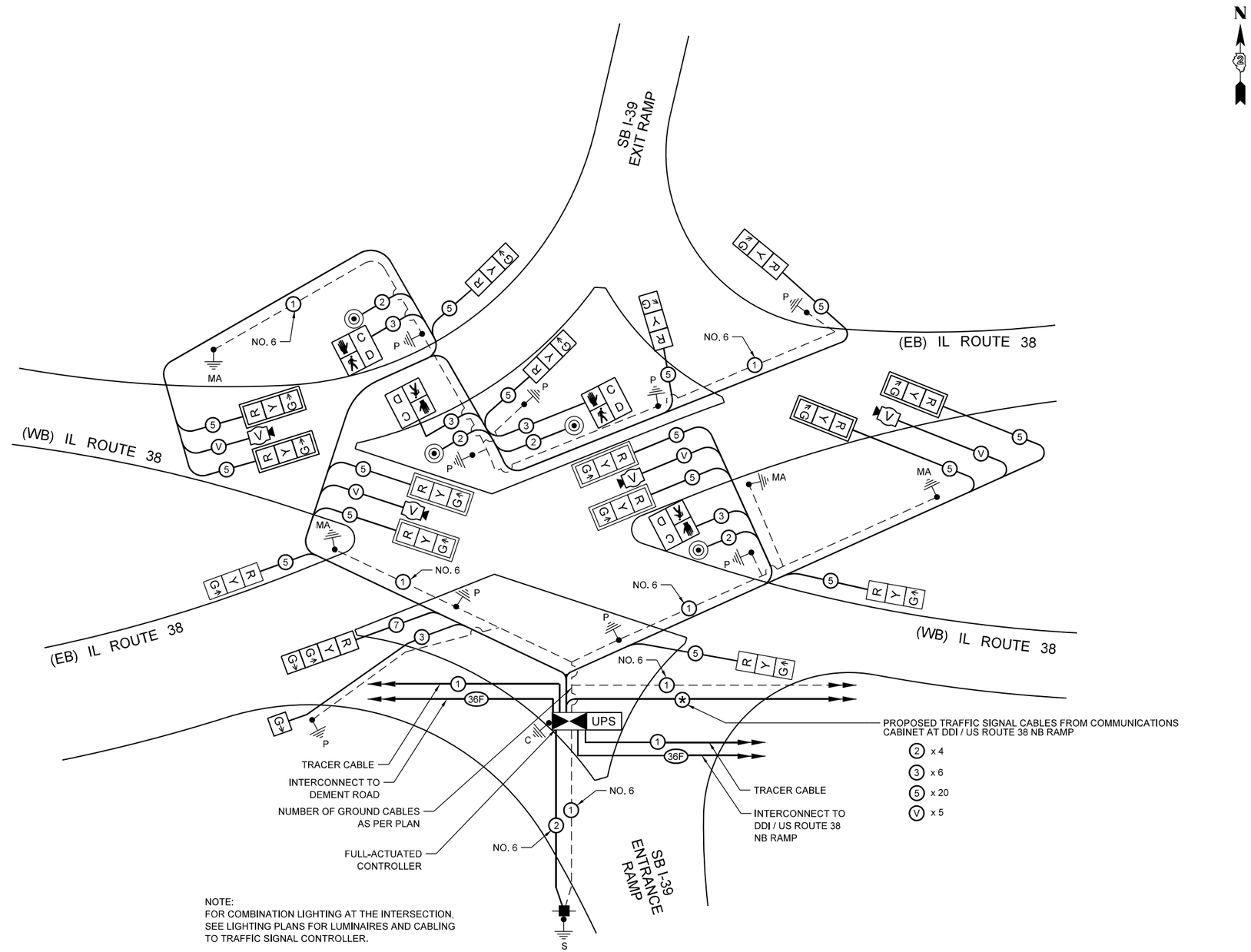

NOTE:
FOR COMBINATION LIGHTING AT THE INTERSECTION, SEE LIGHTING PLANS FOR LUMINAIRES AND CABLING TO TRAFFIC SIGNAL CONTROLLER.

MODEL: Default
FILE NAME: N:\DOT\220628\CAD_Sheets\Traffic\D264N98-TS-SB Ramp-Sht-14_CAB.dgn

CHRISTOPHER B. BURKE ENGINEERING, LTD.
9575 W. Higgins Road, Suite 600
Rosemont, Illinois 60018
(847) 823-0500

USER NAME = nhowellllindgren	DESIGNED - BC	REVISED -	
	DRAWN - FPB	REVISED -	
	CHECKED - GMZ	REVISED -	
PLOT DATE = 2/6/2025	DATE -	REVISED -	

STATE OF ILLINOIS
DEPARTMENT OF TRANSPORTATION

TRAFFIC SIGNAL PLANS
CABLE PLAN
IL ROUTE 38 AND I-39 SB ENT / EXIT RAMPS

SCALE: N.T.S. | SHEET OF SHEETS | STA. TO STA.

F.A.P. RTE.	SECTION	COUNTY	TOTAL SHEETS	SHEET NO.
567	141-1HBR-3 & (9,10) R-3	OGLE	508	364
		CONTRACT NO. 64N98		
		ILLINOIS	FED. AID PROJECT	

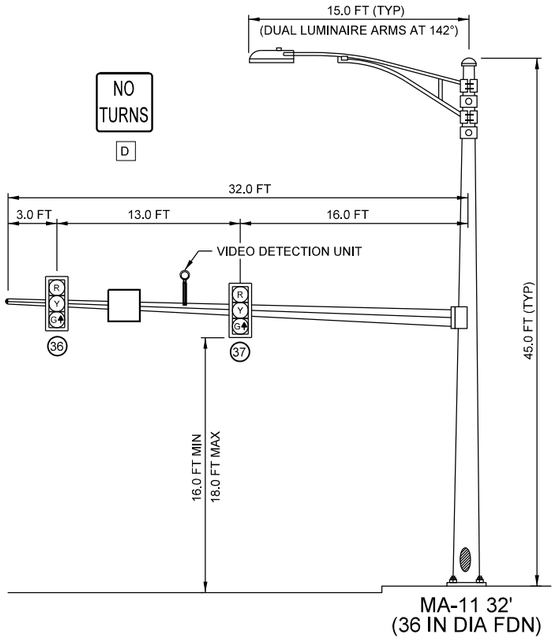

EASTBOUND TRAFFIC SIGNAL
IL ROUTE 38 AND I-39 SB ENT / EXIT RAMP

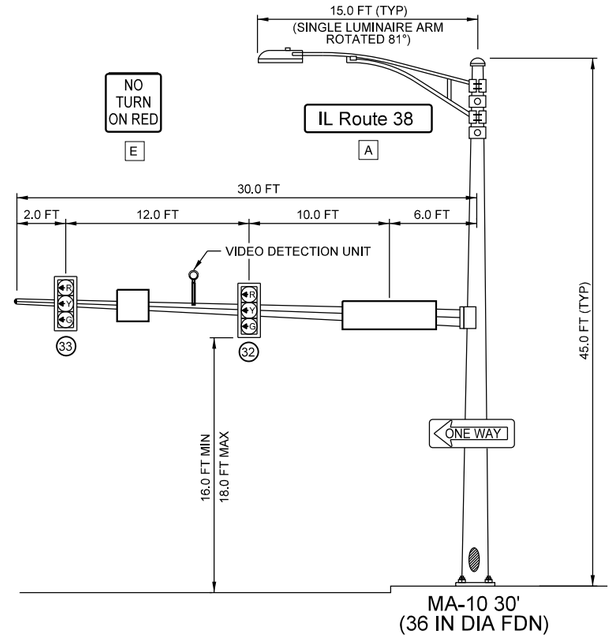

SOUTHBOUND (LEFT TURN) TRAFFIC SIGNAL
IL ROUTE 38 AND I-39 SB ENT / EXIT RAMP

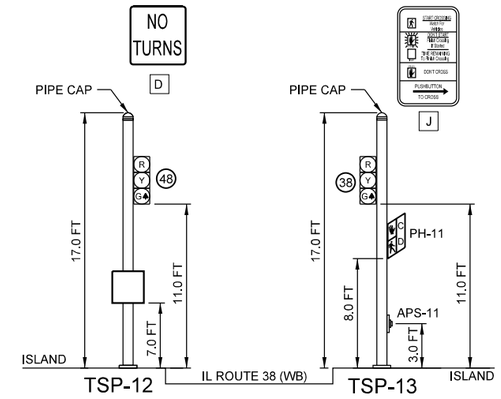

SOUTHEAST QUADRANT
WESTBOUND (AT STOP LINE)
IL ROUTE 38 AND I-39 SB ENT / EXIT RAMP

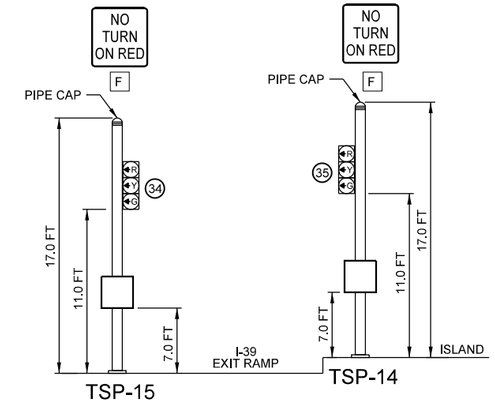

NORTHEAST QUADRANT
SOUTHBOUND LEFT TURN (AT STOP LINE)
IL ROUTE 38 AND I-39 SB ENT / EXIT RAMP

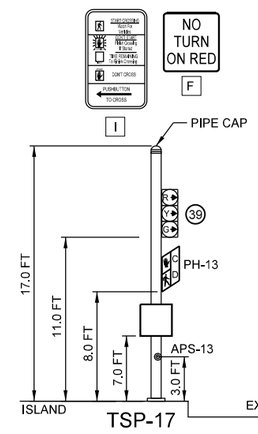

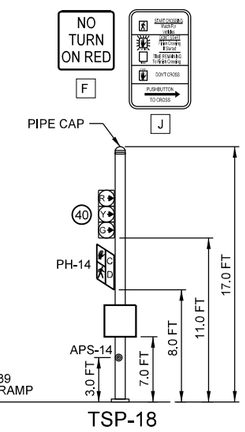

NORTHWEST QUADRANT
SOUTHBOUND RIGHT TURN (AT STOP LINE)
IL ROUTE 38 AND I-39 SB ENT / EXIT RAMP

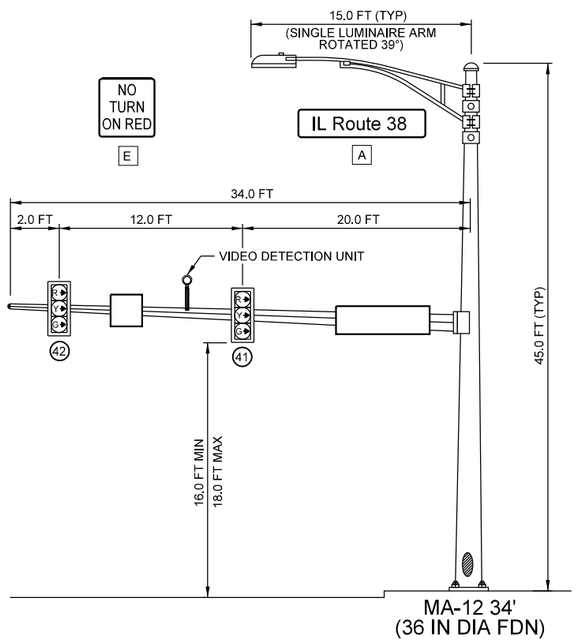

SOUTHBOUND (RIGHT TURN) TRAFFIC SIGNAL
IL ROUTE 38 AND I-39 SB ENT / EXIT RAMP

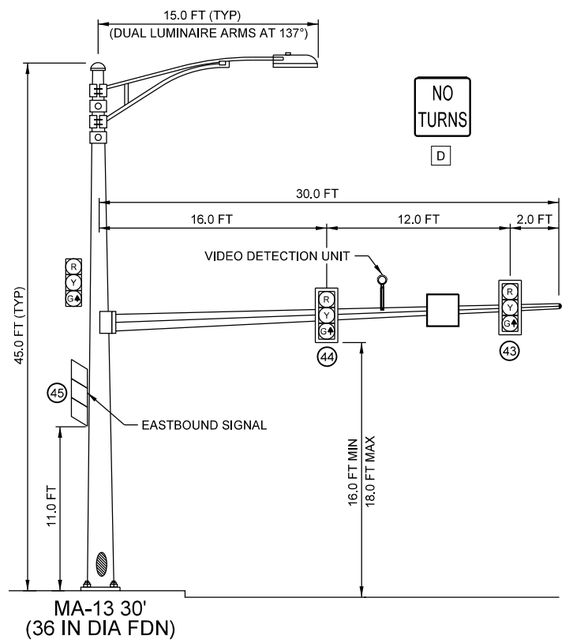

WESTBOUND TRAFFIC SIGNAL
IL ROUTE 38 AND I-39 SB ENT / EXIT RAMP

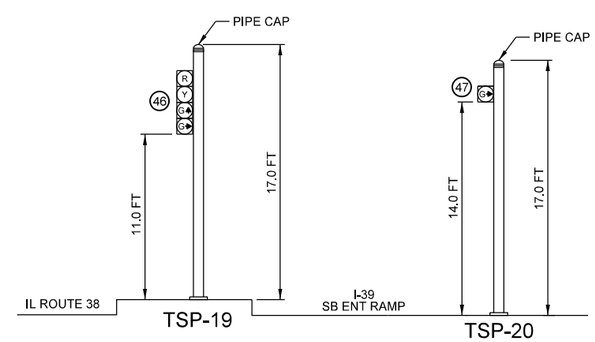

EASTBOUND SW QUADRANT
IL ROUTE 38 AND I-39 SB ENT / EXIT RAMP

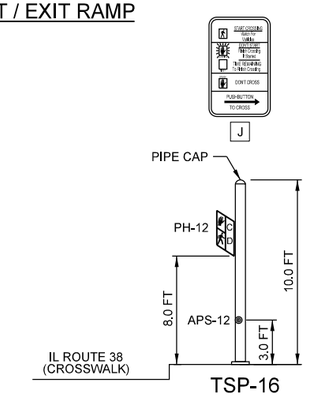

EAST LEG CROSSWALK (LOOKING WEST)
IL ROUTE 38 AND I-39 SB ENT / EXIT RAMP

MODEL: Default
FILE NAME: N:\IDOT\220628\CAD_Sheets\Traffic\D264N98-TS-SB Ramp-Sht-15_DET1.dgn

CHRISTOPHER B. BURKE ENGINEERING, LTD.
9575 W. Higgins Road, Suite 600
Rosemont, Illinois 60018
(847) 823-0500

USER NAME = nhowellindgren	DESIGNED - BC	REVISED -	
	DRAWN - FPB	REVISED -	
	CHECKED - GMZ	REVISED -	
PLOT DATE = 2/6/2025	DATE -	REVISED -	

STATE OF ILLINOIS
DEPARTMENT OF TRANSPORTATION

TRAFFIC SIGNAL MAST ARM AND SIGNAL POST DETAILS
IL ROUTE 38 AND I-39 SB ENT / EXIT RAMPS

SCALE: 1:40 | SHEET OF SHEETS | STA. TO STA.

F.A.P. RTE.	SECTION	COUNTY	TOTAL SHEETS	SHEET NO.
567	141-1HBR-3 & (9,10) R-3	OGLE	508	365
		CONTRACT NO. 64N98		
		ILLINOIS	FED. AID PROJECT	

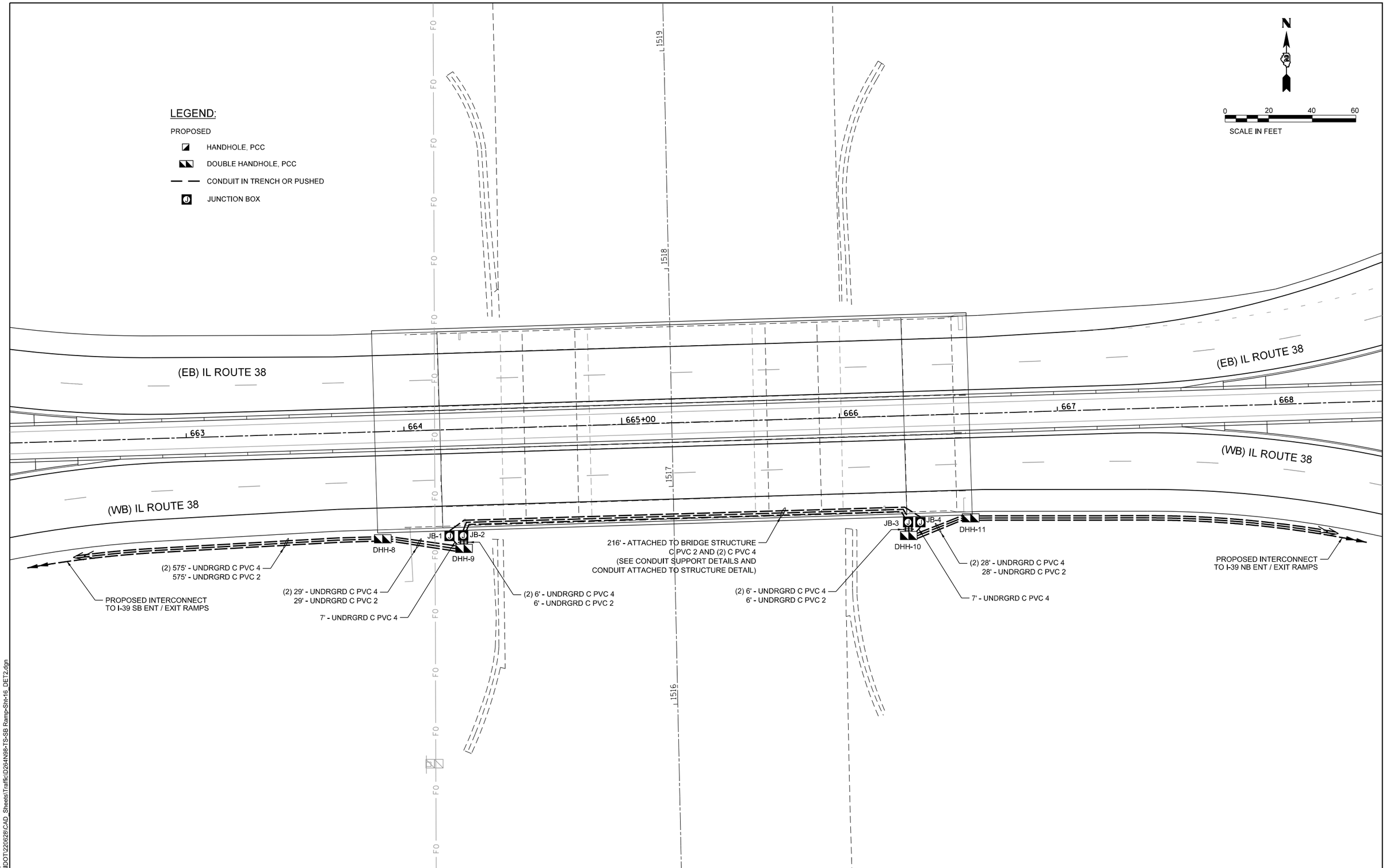

MODEL: Default
FILE NAME: N:\DOT\220\628\CAD_Sheets\Traffic\D264N98-TS-SB Ramp-Sht-16_DET2.dgn

CHRISTOPHER B. BURKE ENGINEERING, LTD.
9575 W. Higgins Road, Suite 600
Rosemont, Illinois 60018
(847) 823-0500

USER NAME = nhowellindgren	DESIGNED - BC	REVISED -	
	DRAWN - FPB	REVISED -	
	CHECKED - GMZ	REVISED -	
PLOT DATE = 2/6/2025	DATE -	REVISED -	

STATE OF ILLINOIS
DEPARTMENT OF TRANSPORTATION

TRAFFIC SIGNAL PLANS
IL ROUTE 38 AND I-39 SB ENT / EXIT RAMPS

SCALE: 1:40 | SHEET OF SHEETS | STA. TO STA.

F.A.P. RTE.	SECTION	COUNTY	TOTAL SHEETS	SHEET NO.
567	141-1HBR-3 & (9,10) R-3	OGLE	508	366
		CONTRACT NO. 64N98		
		ILLINOIS	FED. AID PROJECT	

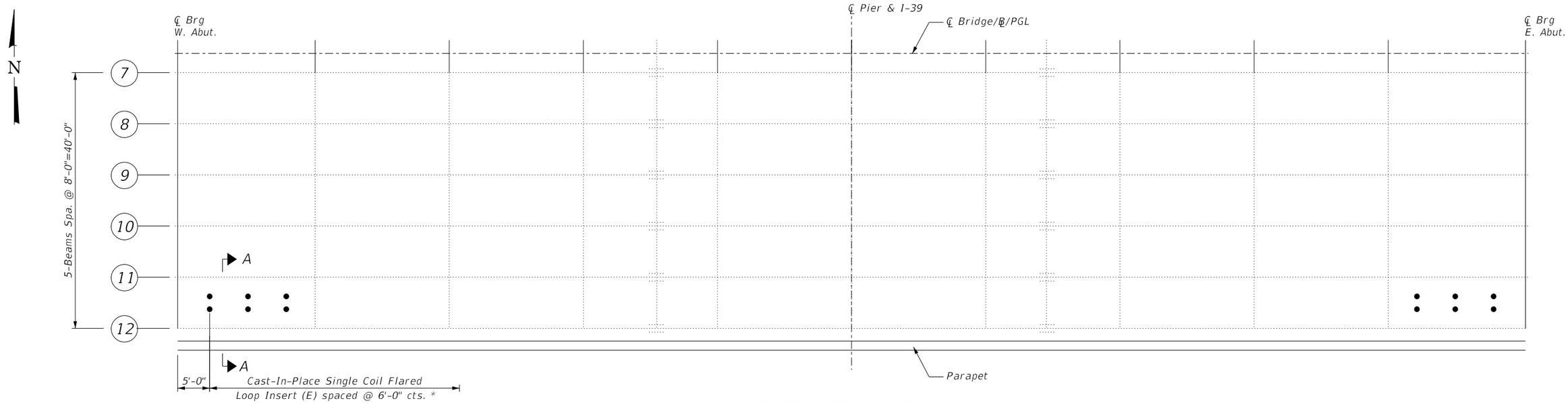

PARTIAL FRAMING PLAN

* Coordinate single coil flared loop inserts for conduit support. The cost of single coil flared loop inserts shall be included in the cost of Concrete Superstructure.

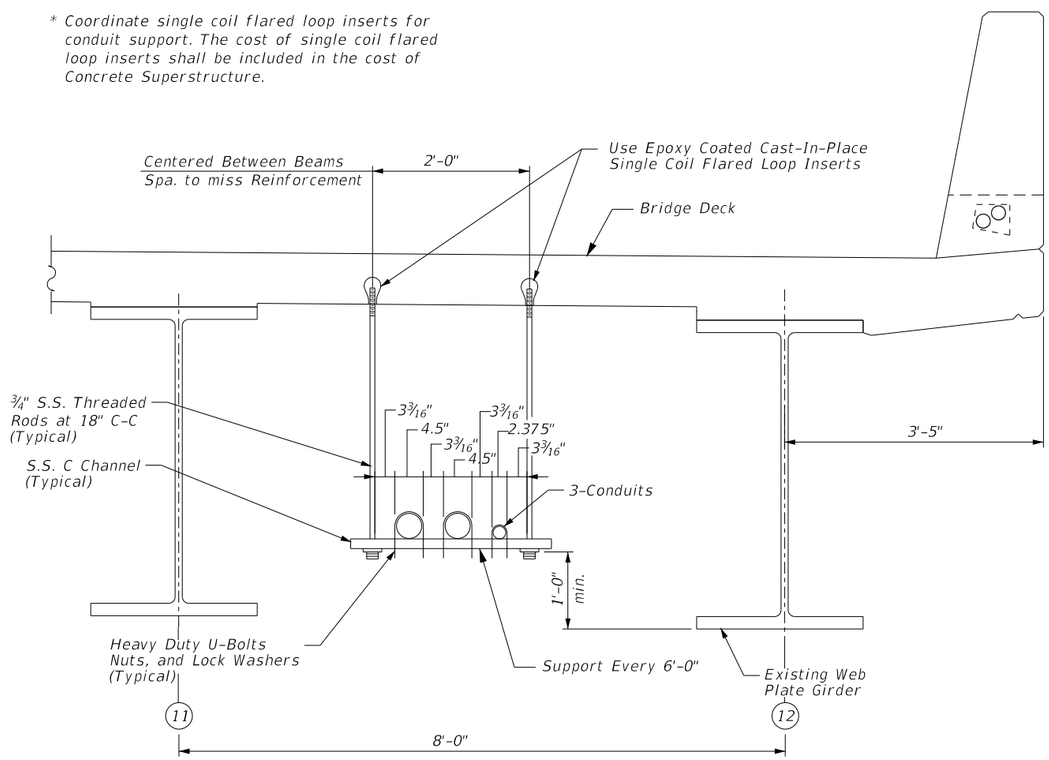

SECTION A-A
TYPICAL CONDUIT SUPPORT
ATTACHED TO BRIDGE DECK DETAIL

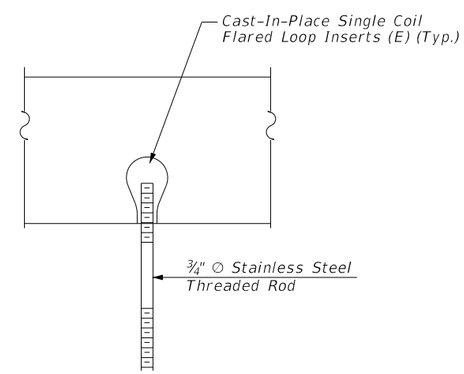

THREADED COIL LOOP
INSERTS DETAIL

NOTE:
For more detail and information, See Traffic Signal Plans.

MODEL: Default
FILE NAME: N:\IDOT\220628\CAD_Sheets\Traffic\D264N98-TS-SB Ramp-Sht-17_S-DET3.dgn

CHRISTOPHER B. BURKE ENGINEERING, LTD.
9575 W. Higgins Road, Suite 600
Rosemont, Illinois 60018
(847) 823-0500

USER NAME = nhowellindgren	DESIGNED -	REVISED -	
	DRAWN -	REVISED -	
	CHECKED -	REVISED -	
PLOT DATE = 2/6/2025	DATE -	REVISED -	

STATE OF ILLINOIS
DEPARTMENT OF TRANSPORTATION

CONDUIT SUPPORT DETAILS
STRUCTURE NO. 071-0058

SCALE: | SHEET 17 OF 29 SHEETS | STA. | TO STA.

F.A.* RTE.	SECTION	COUNTY	TOTAL SHEETS	SHEET NO.
*	141-1HBR-3 & (9,10) R-3	OGLE	508	367
		CONTRACT NO. 64N98		
	ILLINOIS	FED. AID PROJECT		

*FAI ROUTE 39 (I-39) & FAP 567 (IL 38)

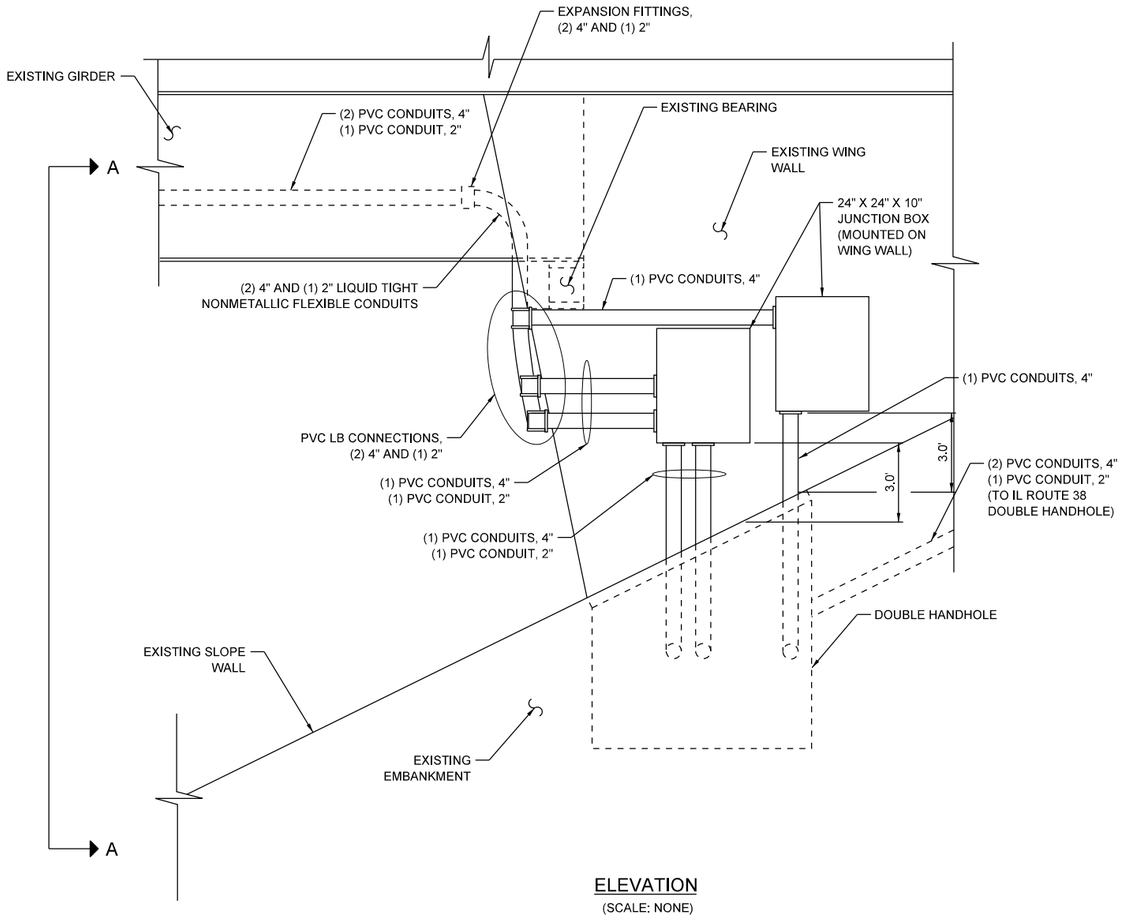

ELEVATION
(SCALE: NONE)

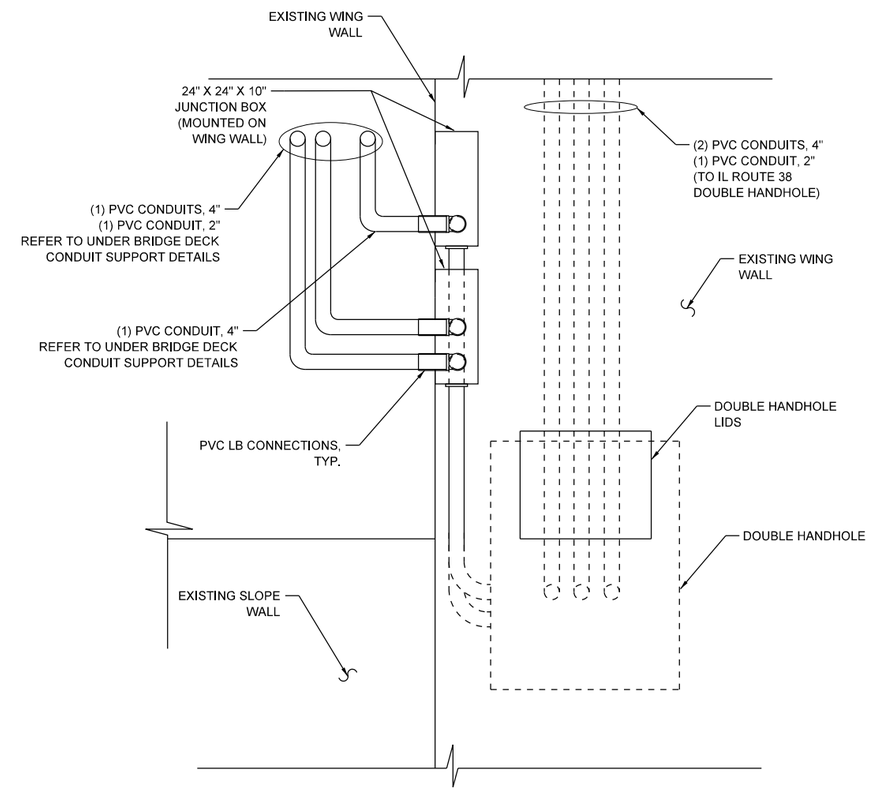

SECTION A-A
(SCALE: NONE)

MODEL: Default
FILE NAME: N:\DOT\220628\CAD_Sheets\Traffic\D264N98-TS-SB Ramp-Sht-18_DET4.dgn

CHRISTOPHER B. BURKE ENGINEERING, LTD. 9575 W. Higgins Road, Suite 600 Rosemont, Illinois 60018 (847) 823-0500	USER NAME = nhowelllindgren	DESIGNED - BC	REVISED -	STATE OF ILLINOIS DEPARTMENT OF TRANSPORTATION	CONDUIT ATTACHED TO STRUCTURE DETAIL IL ROUTE 38 AND I-39 BRIDGE STRUCTURE
		DRAWN - FPB	REVISED -		
		CHECKED - GMZ	REVISED -		
	PLOT DATE = 2/6/2025	DATE -	REVISED -		SCALE: 1:40 SHEET OF SHEETS STA. TO STA.

F.A.P. RTE.	SECTION	COUNTY	TOTAL SHEETS	SHEET NO.
567	141-1HBR-3 & (9,10) R-3	OGLE	508	368
		CONTRACT NO. 64N98		
		ILLINOIS FED. AID PROJECT		

LEGEND:

R	REMOVE ITEM
A	ABANDON ITEM
RCF	CONTROLLER AND CABINET TO BE REMOVED
RMF	MAST ARM POLE AND FOUNDATION TO BE REMOVED
RPF	SIGNAL POST AND FOUNDATION TO BE REMOVED
	EXISTING CONDUIT
	EXISTING HANDHOLE
	EXISTING DOUBLE HANDHOLE
	EXISTING CONTROLLER CABINET
	EXISTING SIGNAL HEAD WITH BACKPLATE
	EXISTING SIGNAL HEAD WITHOUT BACKPLATE
	EXISTING SIGN
	EXISTING STEEL COMBINATION MAST ARM ASSEMBLY AND POLE WITH LUMINAIRE (LENGTH SPECIFIED)
	EXISTING LUMINAIRE
	EXISTING SERVICE POLE
	EXISTING TRAFFIC SIGNAL SIGNAL VIDEO DETECTOR SYSTEM
	EXISTING FLASHING BEACON LIGHT
	EXISTING STEEL MAST ARM ASSEMBLY AND POLE

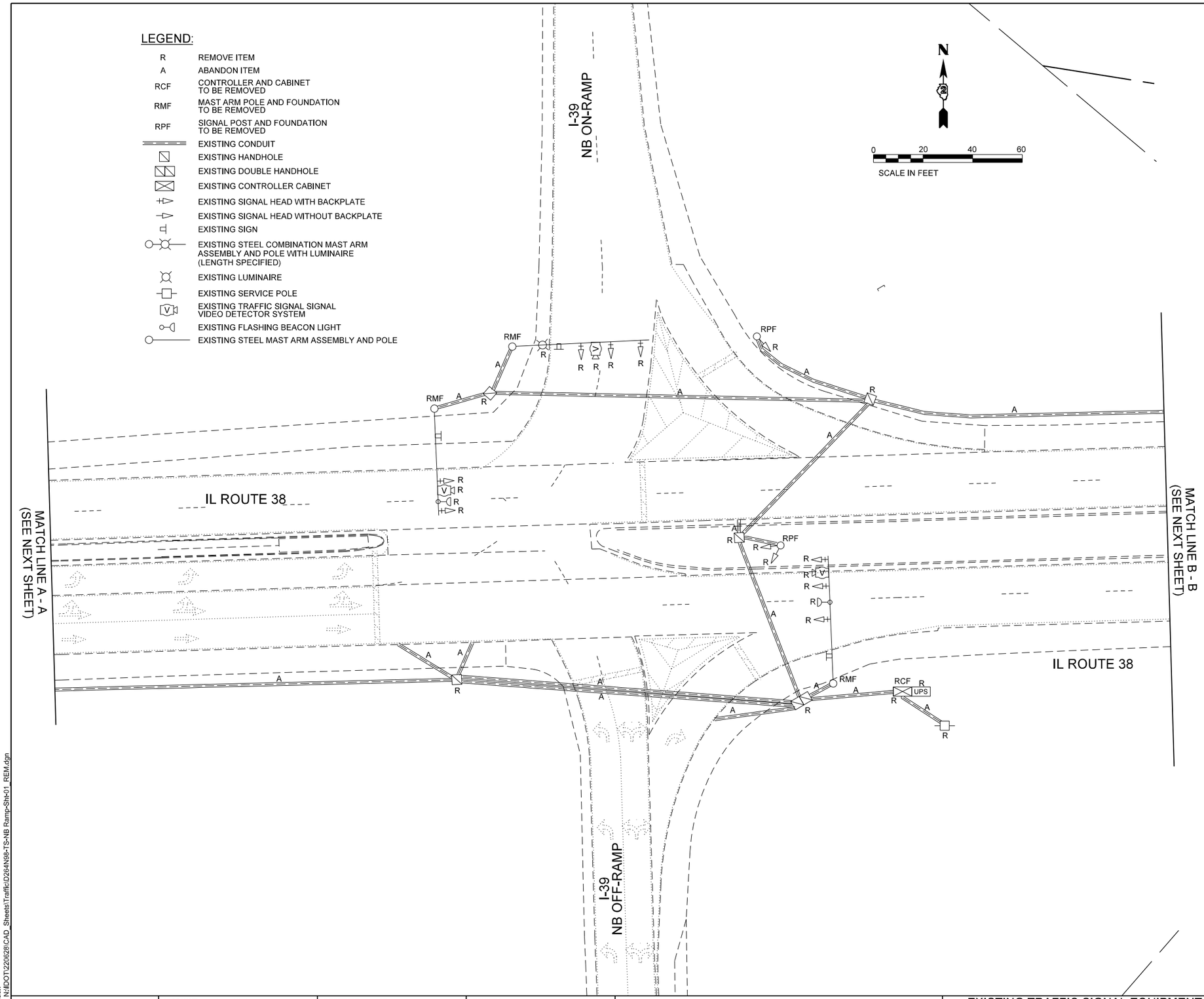

REMOVAL NOTES:

THE FOLLOWING ITEMS SHALL BE REMOVED BY THE CONTRACTOR AND SHALL BE DISPOSED OF BY THEM OUTSIDE THE RIGHT-OF-WAY AT THEIR EXPENSE. THE SALVAGE VALUE OF THE REMOVED EQUIPMENT SHALL BE REFLECTED IN THE CONTRACT BID PRICE.

1	EACH	CONTROLLER AND CABINET (COMPLETE)
1	EACH	COMBINATION STEEL MAST ARM ASSEMBLY AND POLE
2	EACH	STEEL MAST ARM ASSEMBLY AND POLE
2	EACH	TRAFFIC SIGNAL POST
10	EACH	3-SECTION SIGNAL HEAD
1	EACH	4-SECTION SIGNAL HEAD
8	EACH	TRAFFIC SIGNAL BACKPLATE
1	EACH	LUMINAIRE
3	EACH	VIDEO DETECTION CAMERA
1	EACH	SERVICE INSTALLATION
1	EACH	UNINTERRUPTABLE POWER SUPPLY
2	EACH	FLASHING BEACON LIGHT

GENERAL SIGNAL NOTES:

1. BEFORE STARTING ANY EXCAVATION, THE CONTRACTOR SHALL CALL "J.U.L.I.E." AT (800)-892-0123 OR 811 FOR FIELD LOCATIONS OF BURIED UTILITIES, 48-HOUR NOTIFICATION IS REQUIRED.

2. THE CONTRACTOR SHALL CONTACT THE TRAFFIC CONTROL SUPERVISOR AT 72-HOURS IN ADVANCE OF BEGINNING WORK.

3. IT SHALL BE THE CONTRACTOR'S RESPONSIBILITY TO VERIFY ALL DIMENSIONS AND CONDITIONS EXISTING IN THE FIELD PRIOR TO ORDERING MATERIALS AND BEGINNING CONSTRUCTION. THIS SHALL INCLUDE LOCATING THE MAST ARM FOUNDATIONS AND VERIFYING THE MAST ARM LENGTHS.

4. THE EXACT LOCATION OF ALL UTILITIES SHALL BE FIELD VERIFIED BY THE CONTRACTOR BEFORE ORDERING ANY MATERIALS AND STARTING ANY WORK. FOR LOCATIONS OF UTILITIES, LOCALLY OWNED EQUIPMENT, LEASED ENFORCEMENT CAMERA SYSTEM FACILITIES, AND IDOT UNDERGROUND FACILITIES, THE CONTRACTOR SHALL CONTACT THE LOCATION COUNTIES, MUNICIPALITIES, AND IDOT FOR LOCATES. THE CONTRACTOR SHALL BE RESPONSIBLE FOR LOCATING IDOT FACILITITES. THE CONTRACTOR SHALL CALL "J.U.L.I.E." AT (800)892-0123.

5. IF THE CONTRACT REQUIRES THE SERVICES OF AN ELECTRICAL CONTRACTOR, THE CONTRACTOR SHALL BE RESPONSIBLE AT HIS/HER OWN EXPENSE FOR LOCATING EXISTING IDOT ELECTRICAL FACILITIES PRIOR TO PERFORMING ANY WORK. IF THIS CONTRACT DOES NOT REQUIRE THE SERVICES OF AN ELECTRICAL CONTRACTOR, THE CONTRACTOR MAY REQUEST ON FREE LOCATE FOR EXISTING IDOT ELECTRICAL FACILITIES FROM THE DISTRICT TWO ELECTRICAL MAINTENANCE CONTRACTOR PRIOR TO THE START OF ANY WORK. ADDITIONAL REQUESTS MAY BE AT THE EXPENSE OF THE CONTRACTOR. THE LOCATION OF UNDERGROUND TRAFFIC FACILITIES DOES NOT RELIEVE THE CONTRACTOR OF THEIR RESPONSIBILITY TO REPAIR ANY FACILITIES DAMAGES DURING CONSTRUCTION AT THEIR EXPENSE.

6. THE CONTRACTOR SHALL CHECK THE PROPOSED TRAFFIC SIGNAL EQUIPMENT LOCATIONS FOR UNDERGROUND AND OVERHEAD UTILITY CONFLICTS. THE CONTRACTOR SHALL NOTIFY THE AREA ENGINEER, THE RESIDENT ENGINEER AND ANY IMPACTED UTILITY COMPANY OF THE CONFLICT AND SHALL COORDINATE AND RESOLVE THE ISSUE PRIOR TO ORDERING MATERIALS, AND PRIOR TO POURING FOUNDATIONS.

7. THE CONTRACTOR SHALL COORDINATE CONSTRUCTION ACTIVITIES WITH UTILITY COMPANIES, LOCAL GOVERNMENT AGENCIES, AND IDOT.

8. RESTORATION OF THE TRAFFIC SIGNAL WORK AREA SHALL BE INCLUDED IN THE RELATED PAY ITEMS SUCH AS FOUNDATION, CONDUIT, HANDHOLE, ETC., AND NO EXTRA COMPENSATION SHALL BE ALLOWED. ALL ROADWAY SURFACES SUCH AS SHOULDERS, MEDIAN, SIDEWALKS, PAVEMENT, ETC. SHALL BE REPLACED IN KIND. ALL DAMAGE TO MOWED LAWN SHALL BE REPLACED WITH AN APPROVED SOD, AND ALL DAMAGE TO UNMOWED FIELDS SHALL BE SEEDED IN ACCORDANCE WITH STANDARD SPECIFICATIONS 252 AND 250 RESPECTIVELY.

9. PARTIAL PAYMENT AS DESCRIBED IN ARTICLE 109.07(b) OF THE STANDARD SPECIFICATIONS WILL NOT BE ALLOWED FOR ITEMS INCLUDED IN THIS CONTRACT.

10. LOCATION WITH PEDESTRIAN EQUIPMENT HAVE BEEN DESIGNED TO BE ADA COMPLIANT. ANY DEVIATIONS FROM THE PLANS FOR TRAFFIC SIGNAL MAST ARM/POSTS THAT HAVE PEDESTRIAN EQUIPMENT WILL HAVE TO BE APPROVED BY THE ENGINEER TO ENSURE ADA COMPLIANCE.

11. CONTACT SCOTT KULLERSTRAND - IDOT BUREAU OF OPERATIONS (815)284-5468, TWO WEEKS IN ADVANCE TO DISCUSS PROPOSED CONSTRUCTION OF TRAFFIC SIGNALS AND TO ASSIST WITH SIGNAL TIMINGS.

MODEL: Default
FILE NAME: N:\IDOT\220628\CAD_Sheets\Traffic\D264N98-TS-NB Ramp-Sht-01_REM.dgn

CHRISTOPHER B. BURKE ENGINEERING, LTD.
9575 W. Higgins Road, Suite 600
Rosemont, Illinois 60018
(847) 823-0500

USER NAME = nhowellindgren	DESIGNED - BC	REVISED -	
	DRAWN - FPB	REVISED -	
	CHECKED - GMZ	REVISED -	
PLOT DATE = 2/6/2025	DATE -	REVISED -	

STATE OF ILLINOIS
DEPARTMENT OF TRANSPORTATION

EXISTING TRAFFIC SIGNAL EQUIPMENT REMOVAL PLAN
IL ROUTE 38 AND I-39 NB ENT / EXIT RAMPS
(SHEET 1 OF 2)

SCALE: 1:40 | SHEET OF SHEETS | STA. TO STA.

F.A.P. RTE.	SECTION	COUNTY	TOTAL SHEETS	SHEET NO.
567	141-1HBR-3 & (9,10) R-3	OGLE	508	369
		CONTRACT NO. 64N98		
		ILLINOIS	FED. AID PROJECT	

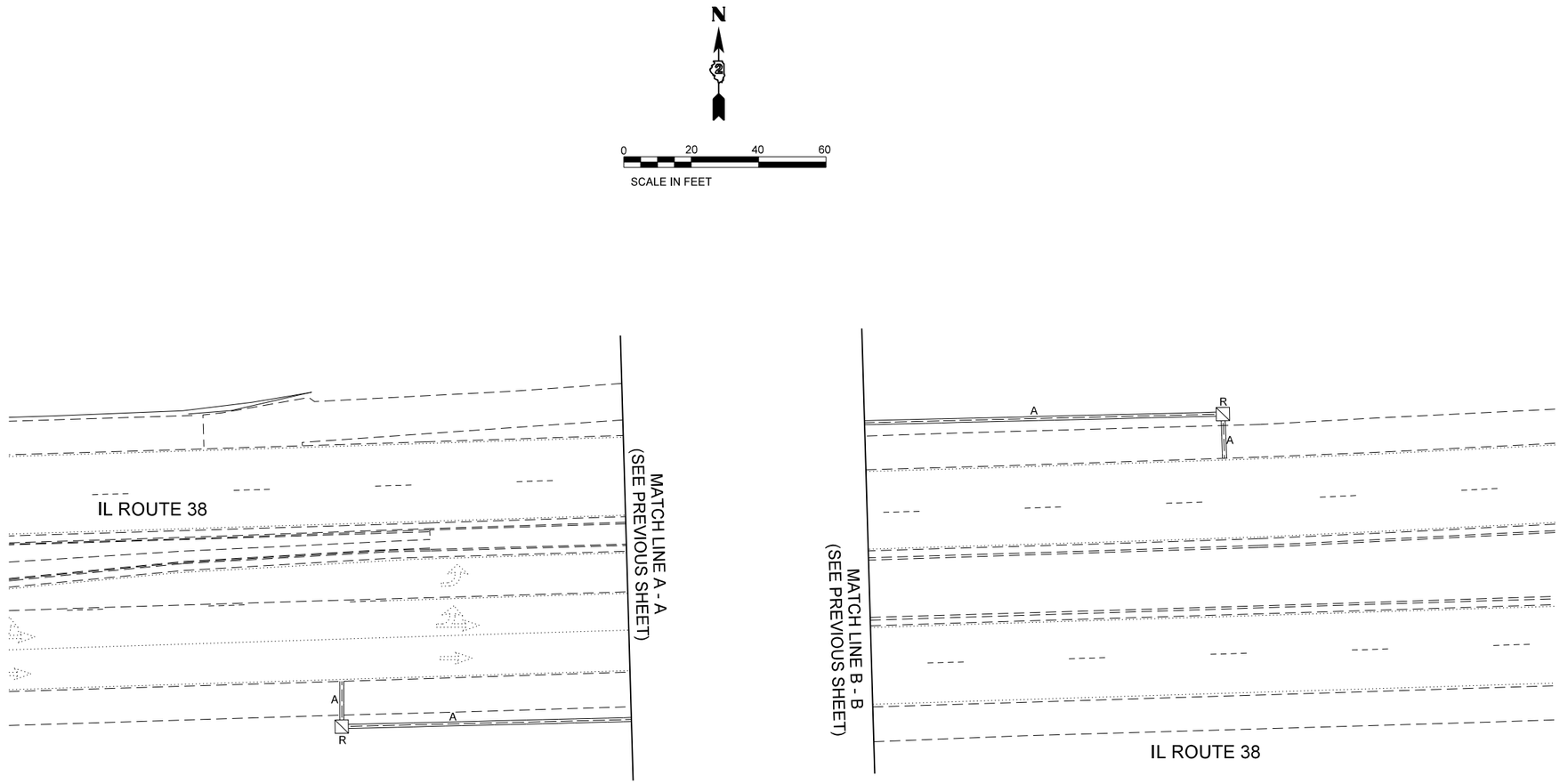

MODEL: Default
FILE NAME: N:\IDOT\220628\CAD_Sheets\Traffic\D284N98-TS-NB Ramp-Sht-02_REM.dgn

CHRISTOPHER B. BURKE ENGINEERING, LTD.
9575 W. Higgins Road, Suite 600
Rosemont, Illinois 60018
(847) 823-0500

USER NAME = nhowellilindgren	DESIGNED - BC	REVISED -	
	DRAWN - FPB	REVISED -	
	CHECKED - GMZ	REVISED -	
PLOT DATE = 2/6/2025	DATE -	REVISED -	

STATE OF ILLINOIS
DEPARTMENT OF TRANSPORTATION

EXISTING TRAFFIC SIGNAL EQUIPMENT REMOVAL PLAN
IL ROUTE 38 AND I-39 NB ENT / EXIT RAMPS
(SHEET 2 OF 2)

SCALE: 1:40 | SHEET OF SHEETS | STA. TO STA.

F.A.P. RTE.	SECTION	COUNTY	TOTAL SHEETS	SHEET NO.
567	141-1HBR-3 & (9,10) R-3	OGLE	508	370

CONTRACT NO. 64N98

ILLINOIS FED. AID PROJECT

TEMPORARY TRAFFIC SIGNAL LEGEND

- TEMPORARY SIGNAL CONTROLLER
- TEMPORARY SERVICE INSTALLATION
- TEMPORARY SIGNAL HEAD
- TEMPORARY WOOD POLE (CLASS 5 OR BETTER) 45' MIN.
- TEMPORARY SPAN WIRE, TETHER WIRE AND CABLE
- GUY WIRE
- TEMPORARY VIDEO DETECTION CAMERA
- TEMPORARY LED LUMINAIRE
- VIDEO DETECTION

SIGN LEGEND:

SIGN (A) R3-1 36" x 36"

SIGN (B) R3-2 36" x 36"

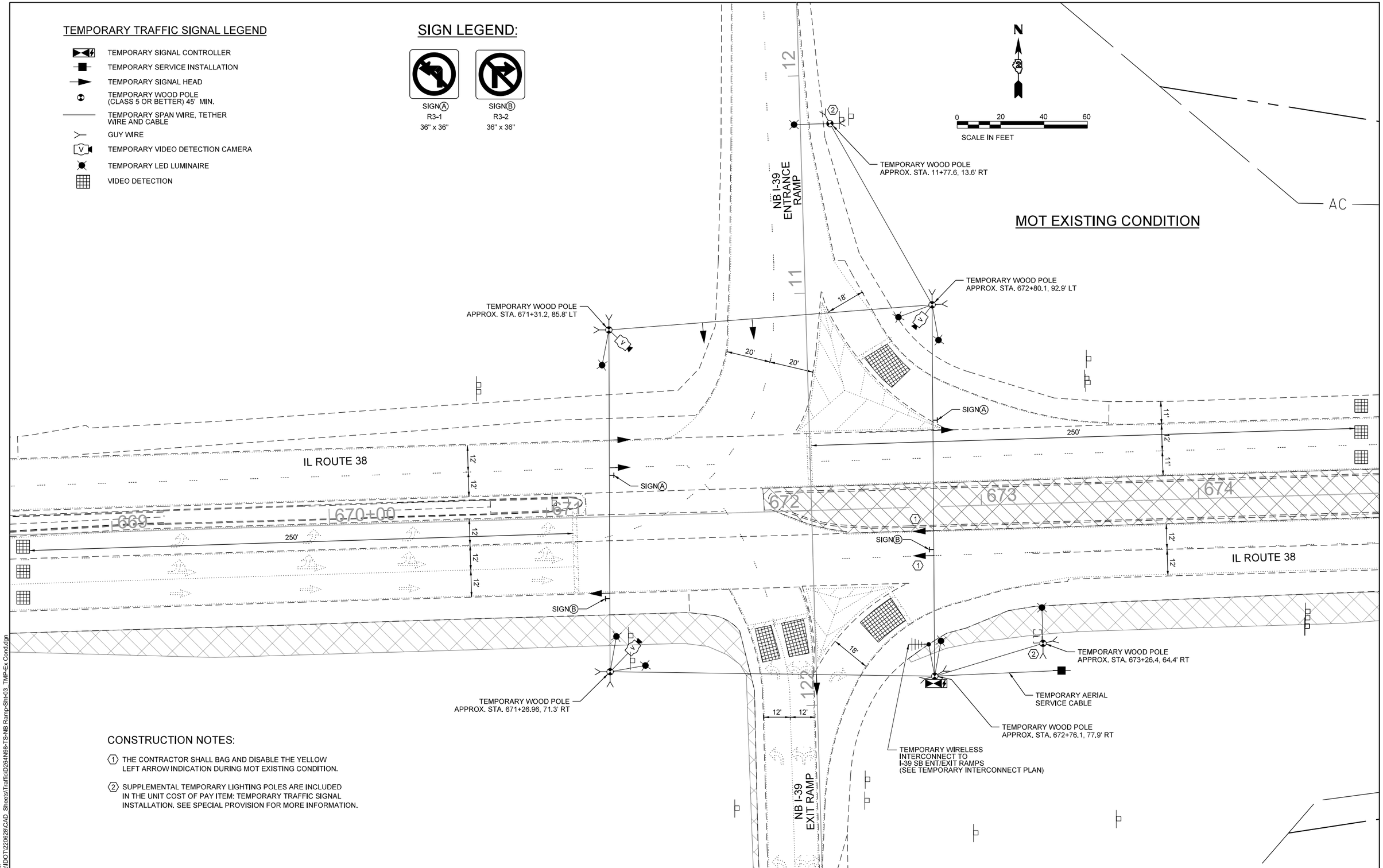

CONSTRUCTION NOTES:

1. THE CONTRACTOR SHALL BAG AND DISABLE THE YELLOW LEFT ARROW INDICATION DURING MOT EXISTING CONDITION.
2. SUPPLEMENTAL TEMPORARY LIGHTING POLES ARE INCLUDED IN THE UNIT COST OF PAY ITEM: TEMPORARY TRAFFIC SIGNAL INSTALLATION. SEE SPECIAL PROVISION FOR MORE INFORMATION.

MODEL: Default
FILE NAME: N:\IDOT\220628\CAD_Sheets\Traffic\D264N98-TS-NB Ramp-Sht-03_TMP-Ex Cond.dgn

CHRISTOPHER B. BURKE ENGINEERING, LTD.
9575 W. Higgins Road, Suite 600
Rosemont, Illinois 60018
(847) 823-0500

USER NAME = nhowellindgren	DESIGNED - BC	REVISED -	
	DRAWN - FPB	REVISED -	
	CHECKED - GMZ	REVISED -	
PLOT DATE = 2/6/2025	DATE -	REVISED -	

STATE OF ILLINOIS
DEPARTMENT OF TRANSPORTATION

TEMPORARY TRAFFIC SIGNAL INSTALLATION PLAN
IL ROUTE 38 AND I-39 NB ENT / EXIT RAMPS

SCALE: 1:40 | SHEET OF SHEETS | STA. TO STA.

F.A.P. RTE.	SECTION	COUNTY	TOTAL SHEETS	SHEET NO.
567	141-1HBR-3 & (9,10) R-3	OGLE	508	371

CONTRACT NO. 64N98

ILLINOIS | FED. AID PROJECT

TEMPORARY TRAFFIC SIGNAL LEGEND

- TEMPORARY SIGNAL CONTROLLER
- TEMPORARY SERVICE INSTALLATION
- TEMPORARY SIGNAL HEAD
- TEMPORARY WOOD POLE (CLASS 5 OR BETTER) 45' MIN.
- TEMPORARY SPAN WIRE, TETHER WIRE AND CABLE
- GUY WIRE
- TEMPORARY VIDEO DETECTION CAMERA
- TEMPORARY LED LUMINAIRE
- VIDEO DETECTION

SIGN LEGEND:

SIGN (A) R3-1 36" x 36"

SIGN (B) R3-2 36" x 36"

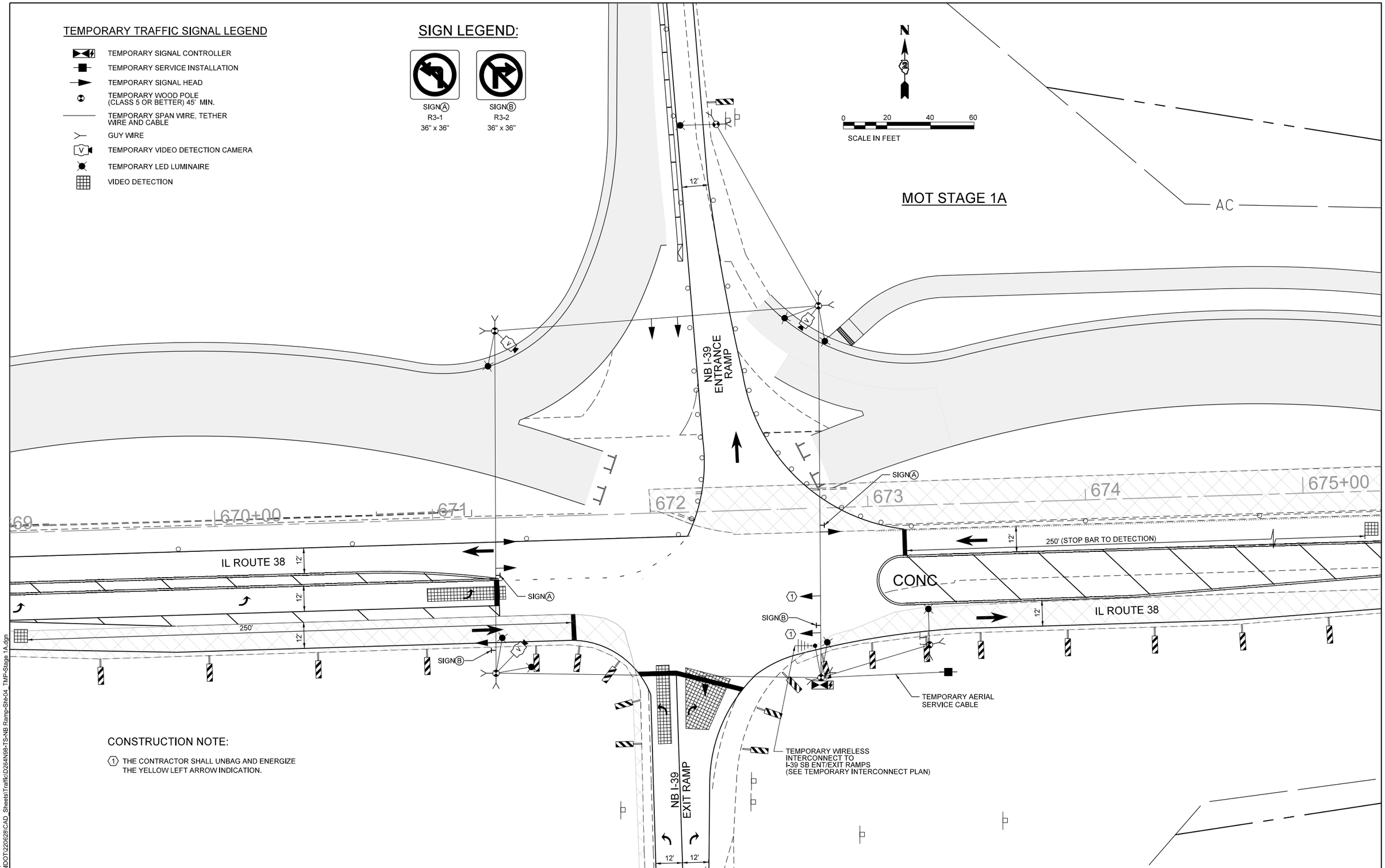

CONSTRUCTION NOTE:

(1) THE CONTRACTOR SHALL UNBAG AND ENERGIZE THE YELLOW LEFT ARROW INDICATION.

MODEL: Default
FILE NAME: N:\IDOT\220628\CAD_Sheets\Traffic\D264N98-TS-NB Ramp-Sht-04_TMP-Stage 1A.dgn

CHRISTOPHER B. BURKE ENGINEERING, LTD.
9575 W. Higgins Road, Suite 600
Rosemont, Illinois 60018
(847) 823-0500

USER NAME = nhowellllindgren	DESIGNED - BC	REVISED -	
	DRAWN - FPB	REVISED -	
	CHECKED - GMZ	REVISED -	
PLOT DATE = 2/6/2025	DATE -	REVISED -	

STATE OF ILLINOIS
DEPARTMENT OF TRANSPORTATION

TEMPORARY TRAFFIC SIGNAL INSTALLATION PLAN
IL ROUTE 38 AND I-39 NB ENT / EXIT RAMPS

SCALE: 1:40 | SHEET OF SHEETS | STA. TO STA.

F.A.P. RTE.	SECTION	COUNTY	TOTAL SHEETS	SHEET NO.
567	141-1HBR-3 & (9,10) R-3	OGLE	508	372
		CONTRACT NO. 64N98		
		ILLINOIS	FED. AID PROJECT	

TEMPORARY TRAFFIC SIGNAL LEGEND

- TEMPORARY SIGNAL CONTROLLER
- TEMPORARY SERVICE INSTALLATION
- TEMPORARY SIGNAL HEAD
- TEMPORARY WOOD POLE (CLASS 5 OR BETTER) 45' MIN.
- TEMPORARY SPAN WIRE, TETHER WIRE AND CABLE
- GUY WIRE
- TEMPORARY VIDEO DETECTION CAMERA
- TEMPORARY LED LUMINAIRE
- VIDEO DETECTION

SIGN LEGEND:

SIGN (A) R3-1 36" x 36"

SIGN (B) R3-2 36" x 36"

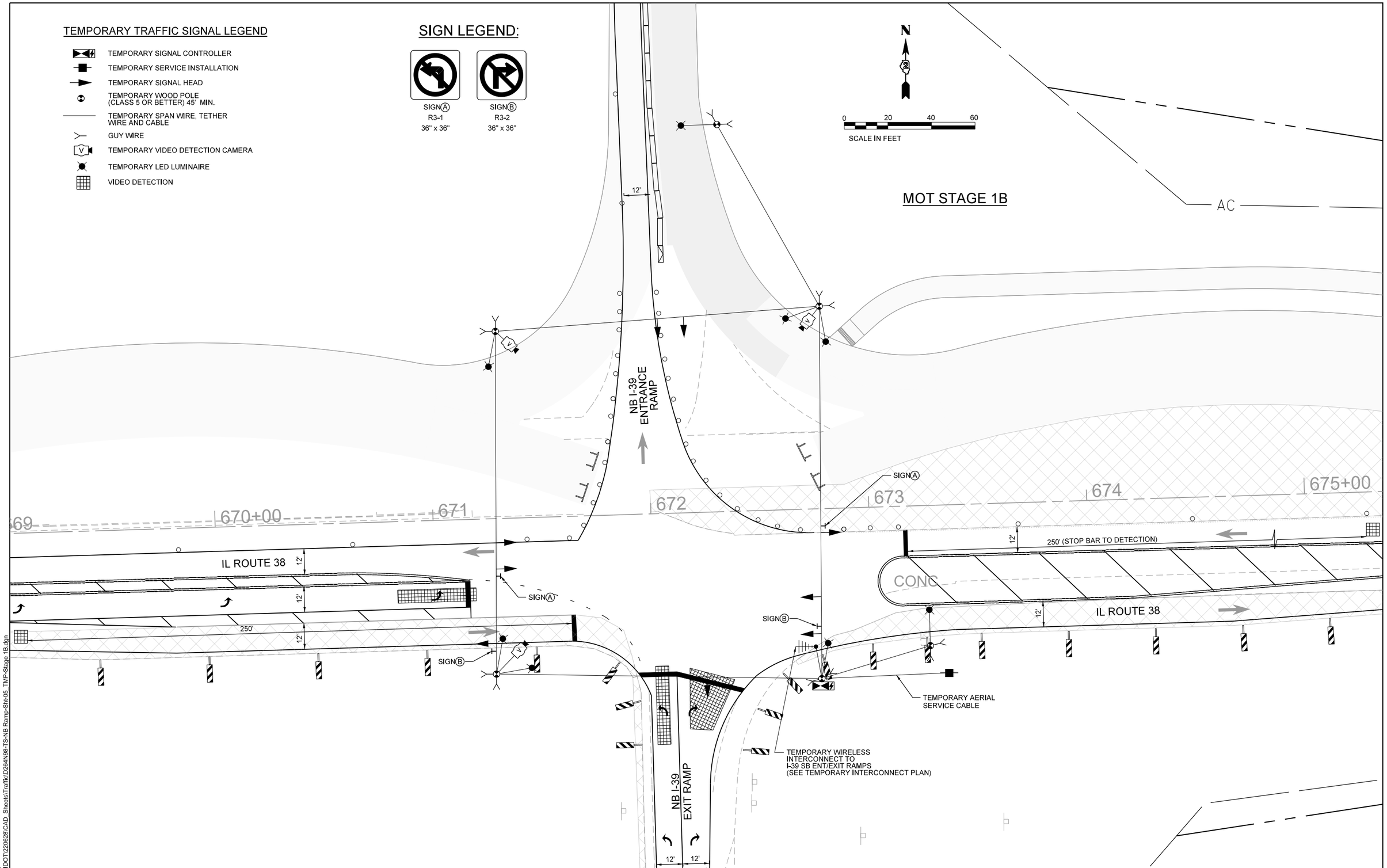

MODEL: Default
FILE NAME: N:\IDOT\220628\CAD_Sheets\Traffic\D264N98-TS-NB Ramp-Sht-05_TMP-Stage 1B.dgn

CHRISTOPHER B. BURKE ENGINEERING, LTD.
9575 W. Higgins Road, Suite 600
Rosemont, Illinois 60018
(847) 823-0500

USER NAME = nhowellllindgren	DESIGNED - BC	REVISED -	
	DRAWN - FPB	REVISED -	
	CHECKED - GMZ	REVISED -	
PLOT DATE = 2/6/2025	DATE -	REVISED -	

STATE OF ILLINOIS
DEPARTMENT OF TRANSPORTATION

TEMPORARY TRAFFIC SIGNAL INSTALLATION PLAN
IL ROUTE 38 AND I-39 NB ENT / EXIT RAMPS

SCALE: 1:40 | SHEET OF SHEETS | STA. TO STA.

F.A.P. RTE.	SECTION	COUNTY	TOTAL SHEETS	SHEET NO.
567	141-1HBR-3 & (9,10) R-3	OGLE	508	373
		CONTRACT NO. 64N98		
		ILLINOIS	FED. AID PROJECT	

TEMPORARY TRAFFIC SIGNAL LEGEND

- TEMPORARY SIGNAL CONTROLLER
- TEMPORARY SERVICE INSTALLATION
- TEMPORARY SIGNAL HEAD
- TEMPORARY WOOD POLE (CLASS 5 OR BETTER) 45' MIN.
- TEMPORARY SPAN WIRE, TETHER WIRE AND CABLE
- GUY WIRE
- TEMPORARY VIDEO DETECTION CAMERA
- TEMPORARY LED LUMINAIRE
- VIDEO DETECTION

SIGN LEGEND:

SIGN Ⓐ	SIGN Ⓑ	SIGN Ⓒ
R3-1	R3-2	R3-27
36" x 36"	36" x 36"	36" x 36"

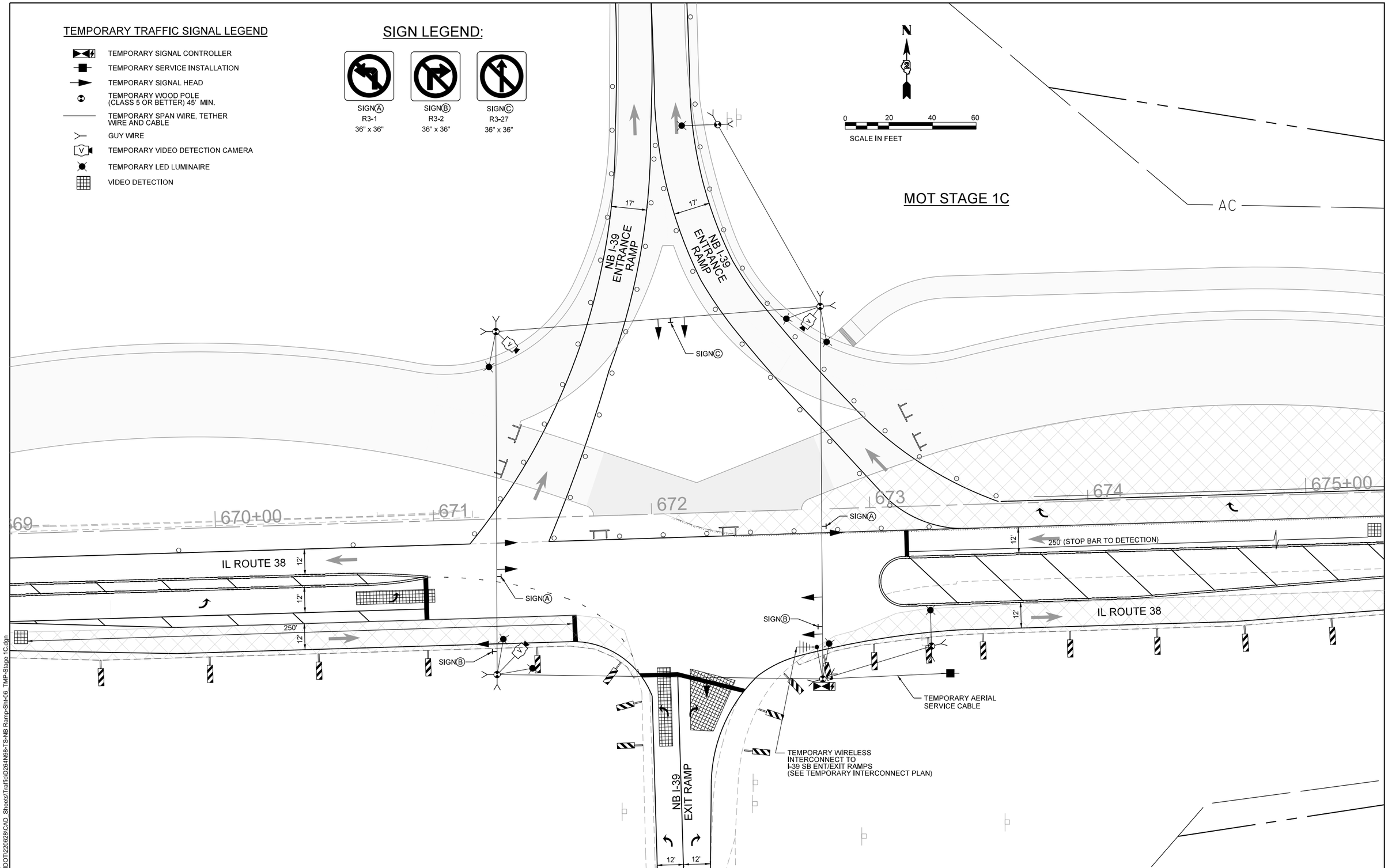

MODEL: Default
FILE NAME: N:\IDOT\220628\CAD_Sheets\Traffic\D264N98-TS-NB Ramp-Sht-06_TMP-Stage 1C.dgn

CHRISTOPHER B. BURKE ENGINEERING, LTD.
9575 W. Higgins Road, Suite 600
Rosemont, Illinois 60018
(847) 823-0500

USER NAME = nhowellllindgren	DESIGNED - BC	REVISED -
	DRAWN - FPB	REVISED -
	CHECKED - GMZ	REVISED -
PLOT DATE = 2/6/2025	DATE -	REVISED -

STATE OF ILLINOIS
DEPARTMENT OF TRANSPORTATION

TEMPORARY TRAFFIC SIGNAL INSTALLATION PLAN
IL ROUTE 38 AND I-39 NB ENT / EXIT RAMPS

SCALE: 1:40 | SHEET OF SHEETS | STA. TO STA.

F.A.P. RTE.	SECTION	COUNTY	TOTAL SHEETS	SHEET NO.
567	141-1HBR-3 & (9,10) R-3	OGLE	508	374

CONTRACT NO. 64N98

ILLINOIS | FED. AID PROJECT

TEMPORARY TRAFFIC SIGNAL LEGEND

- TEMPORARY SIGNAL CONTROLLER
- TEMPORARY SERVICE INSTALLATION
- TEMPORARY SIGNAL HEAD
- TEMPORARY WOOD POLE (CLASS 5 OR BETTER) 45' MIN.
- TEMPORARY SPAN WIRE, TETHER WIRE AND CABLE
- GUY WIRE
- TEMPORARY VIDEO DETECTION CAMERA
- TEMPORARY LED LUMINAIRE
- VIDEO DETECTION

SIGN LEGEND:

SIGN Ⓐ	SIGN Ⓑ	SIGN Ⓒ
R3-1	R3-2	R3-27
36" x 36"	36" x 36"	36" x 36"

MOT STAGE 1D

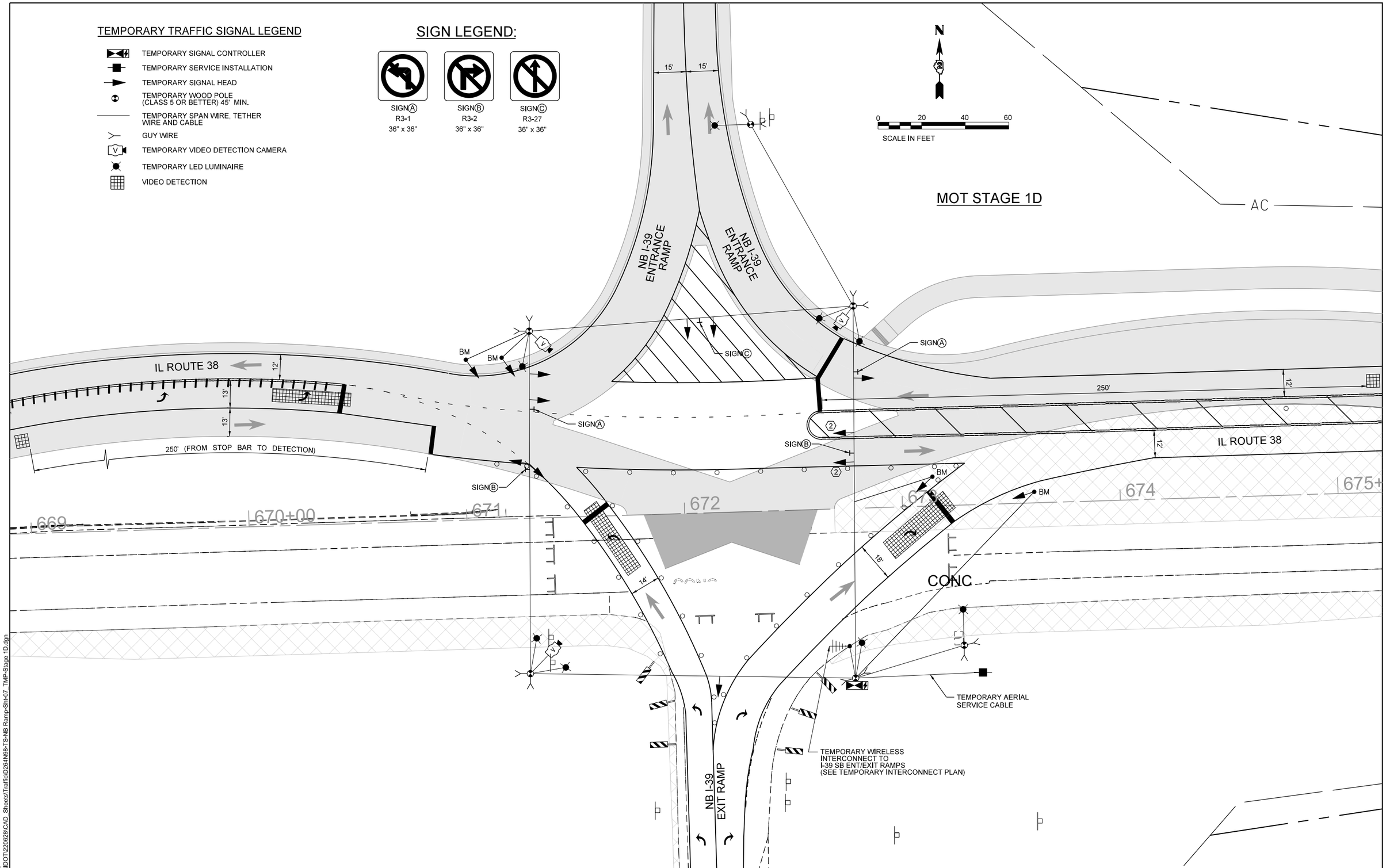

MODEL: Default
FILE NAME: N:\DOT\220628\CAD_Sheets\Traffic\D264N98-TS-NB Ramp-Sht-07_TMP-Stage 1D.dgn

CHRISTOPHER B. BURKE ENGINEERING, LTD.
9575 W. Higgins Road, Suite 600
Rosemont, Illinois 60018
(847) 823-0500

USER NAME = nhowellilindgren	DESIGNED - BC	REVISED -	
	DRAWN - FPB	REVISED -	
	CHECKED - GMZ	REVISED -	
PLOT DATE = 2/6/2025	DATE -	REVISED -	

STATE OF ILLINOIS
DEPARTMENT OF TRANSPORTATION

TEMPORARY TRAFFIC SIGNAL INSTALLATION PLAN
IL ROUTE 38 AND I-39 NB ENT / EXIT RAMPS

SCALE: 1:40 | SHEET OF SHEETS | STA. TO STA.

F.A.P. RTE.	SECTION	COUNTY	TOTAL SHEETS	SHEET NO.
567	141-1HBR-3 & (9,10) R-3	OGLE	508	375
		CONTRACT NO. 64N98		
	ILLINOIS	FED. AID PROJECT		

TEMPORARY TRAFFIC SIGNAL LEGEND

- TEMPORARY SIGNAL CONTROLLER
- TEMPORARY SERVICE INSTALLATION
- TEMPORARY SIGNAL HEAD
- TEMPORARY WOOD POLE (CLASS 5 OR BETTER) 45' MIN.
- TEMPORARY SPAN WIRE, TETHER WIRE AND CABLE
- GUY WIRE
- TEMPORARY VIDEO DETECTION CAMERA
- TEMPORARY LED LUMINAIRE
- VIDEO DETECTION

SIGN LEGEND:

SIGN Ⓐ	SIGN Ⓑ	SIGN Ⓒ
R3-1	R3-2	R3-27
36" x 36"	36" x 36"	36" x 36"

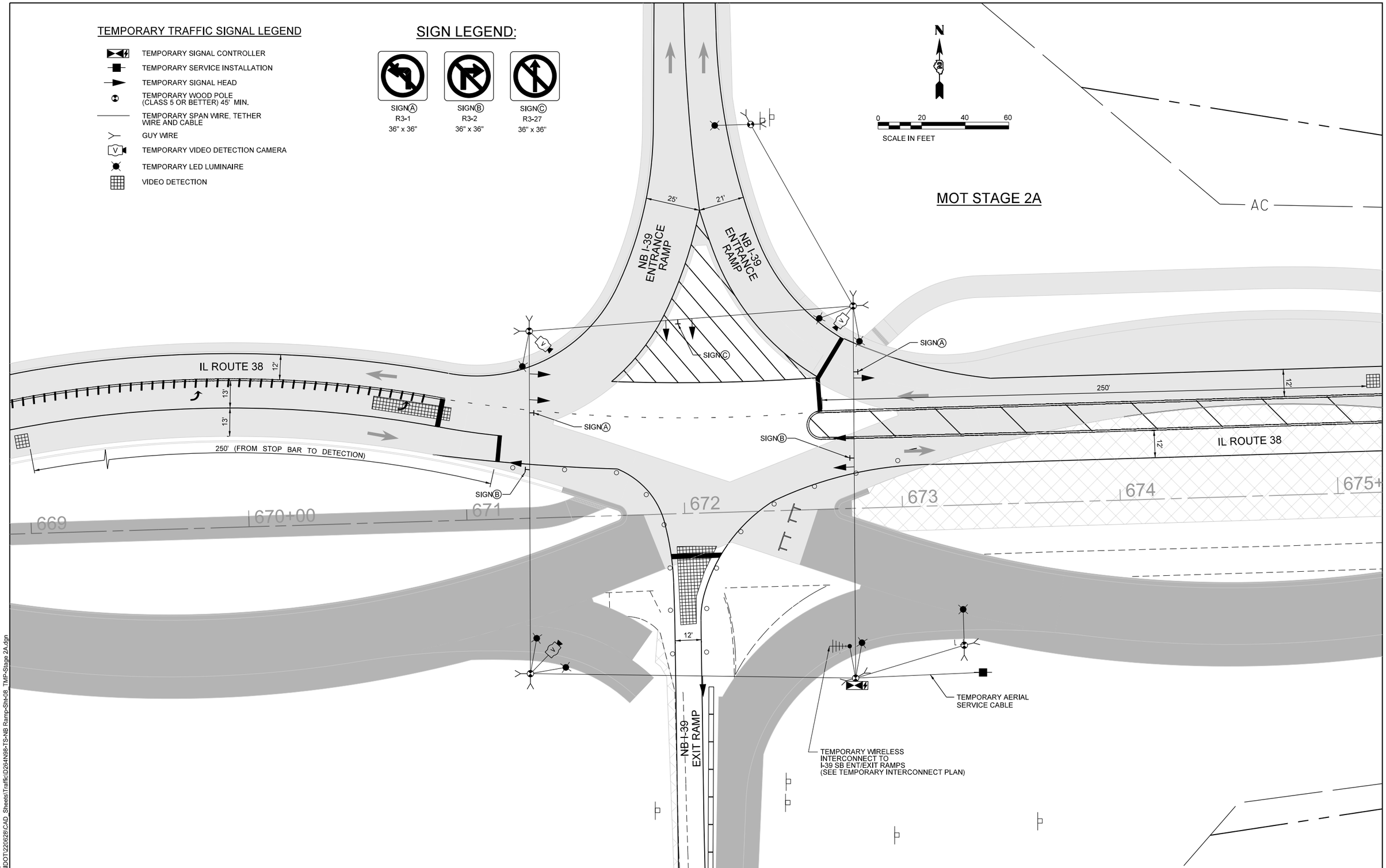

MODEL: Default
FILE NAME: N:\IDOT\220628\CAD_Sheets\Traffic\D264N98-TS-NB Ramp-Shk-08_TMP-Stage 2A.dgn

CHRISTOPHER B. BURKE ENGINEERING, LTD.
9575 W. Higgins Road, Suite 600
Rosemont, Illinois 60018
(847) 823-0500

USER NAME = nhowellllindgren	DESIGNED - BC	REVISED -	
	DRAWN - FPB	REVISED -	
	CHECKED - GMZ	REVISED -	
PLOT DATE = 2/6/2025	DATE -	REVISED -	

STATE OF ILLINOIS
DEPARTMENT OF TRANSPORTATION

TEMPORARY TRAFFIC SIGNAL INSTALLATION PLAN
IL ROUTE 38 AND I-39 NB ENT / EXIT RAMPS

SCALE: 1:40 | SHEET OF SHEETS | STA. TO STA.

F.A.P. RTE.	SECTION	COUNTY	TOTAL SHEETS	SHEET NO.
567	141-1HBR-3 & (9,10) R-3	OGLE	508	376
		CONTRACT NO. 64N98		
	ILLINOIS	FED. AID PROJECT		

TEMPORARY TRAFFIC SIGNAL LEGEND

- TEMPORARY SIGNAL CONTROLLER
- TEMPORARY SERVICE INSTALLATION
- TEMPORARY SIGNAL HEAD
- TEMPORARY WOOD POLE (CLASS 5 OR BETTER) 45' MIN.
- TEMPORARY SPAN WIRE, TETHER WIRE AND CABLE
- GUY WIRE
- TEMPORARY VIDEO DETECTION CAMERA
- TEMPORARY LED LUMINAIRE
- VIDEO DETECTION

SIGN LEGEND:

SIGN Ⓐ	SIGN Ⓑ	SIGN Ⓒ
R3-1	R3-2	R3-27
36" x 36"	36" x 36"	36" x 36"

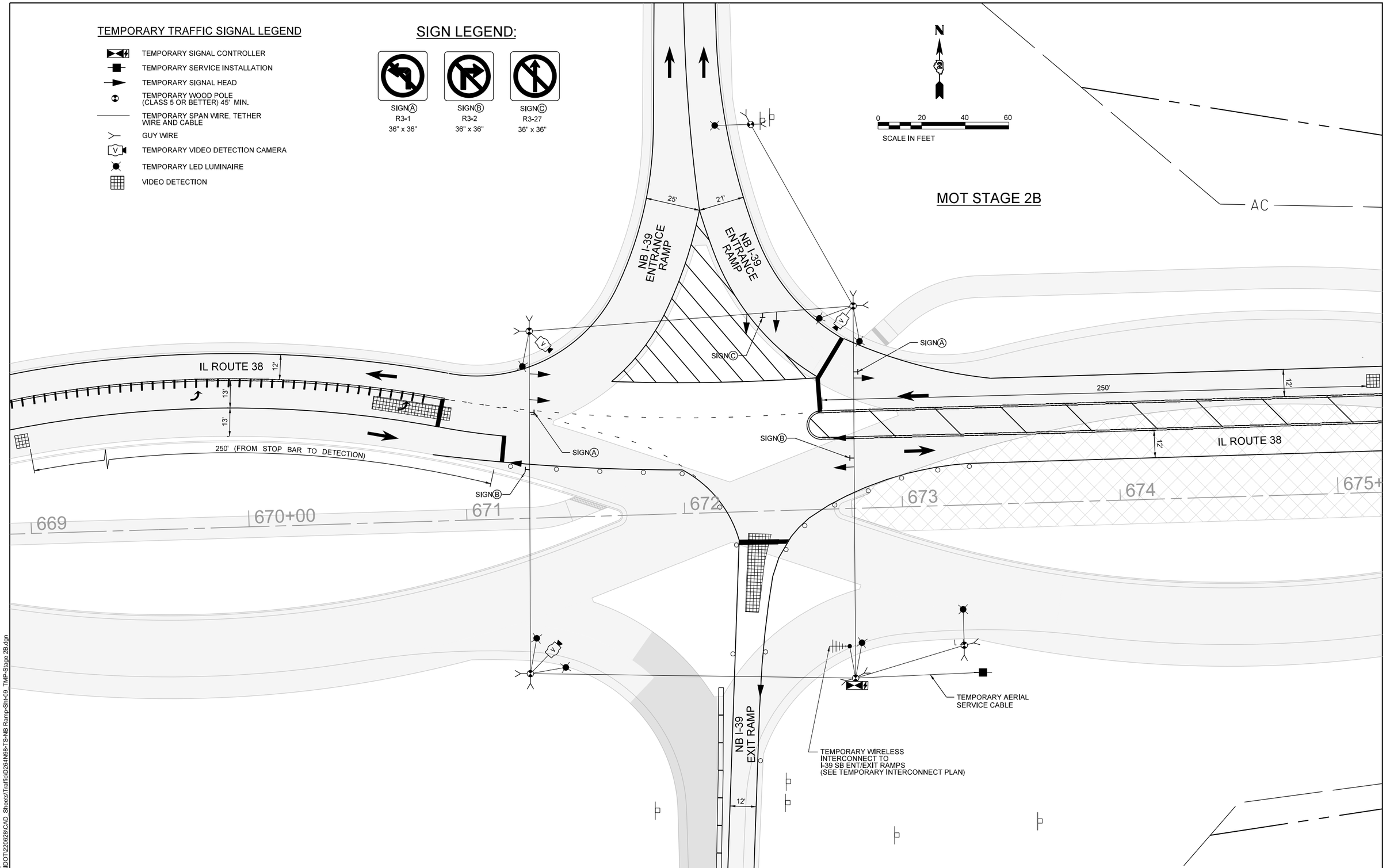

MODEL: Default
FILE NAME: N:\IDOT\220628\CAD_Sheets\Traffic\D264N98-TS-NB Ramp-Sht-09_TMP-Stage 2B.dgn

CHRISTOPHER B. BURKE ENGINEERING, LTD.
9575 W. Higgins Road, Suite 600
Rosemont, Illinois 60018
(847) 823-0500

USER NAME = nhowellindgren	DESIGNED - BC	REVISED -	
	DRAWN - FPB	REVISED -	
	CHECKED - GMZ	REVISED -	
PLOT DATE = 2/6/2025	DATE -	REVISED -	

STATE OF ILLINOIS
DEPARTMENT OF TRANSPORTATION

TEMPORARY TRAFFIC SIGNAL INSTALLATION PLAN
IL ROUTE 38 AND I-39 NB ENT / EXIT RAMPS

SCALE: 1:40 | SHEET OF SHEETS | STA. TO STA.

F.A.P. RTE.	SECTION	COUNTY	TOTAL SHEETS	SHEET NO.
567	141-1HBR-3 & (9,10) R-3	OGLE	508	377

CONTRACT NO. 64N98

ILLINOIS | FED. AID PROJECT

TEMPORARY TRAFFIC SIGNAL LEGEND

- TEMPORARY SIGNAL CONTROLLER
- TEMPORARY SERVICE INSTALLATION
- TEMPORARY SIGNAL HEAD
- TEMPORARY WOOD POLE (CLASS 5 OR BETTER) 45' MIN.
- TEMPORARY SPAN WIRE, TETHER WIRE AND CABLE
- GUY WIRE
- TEMPORARY VIDEO DETECTION CAMERA
- TEMPORARY LED LUMINAIRE
- VIDEO DETECTION
- TEMPORARY PEDESTRIAN SIGNAL
- TEMPORARY PUSHBUTTON
- BM BARREL MOUNTED SIGNAL POST

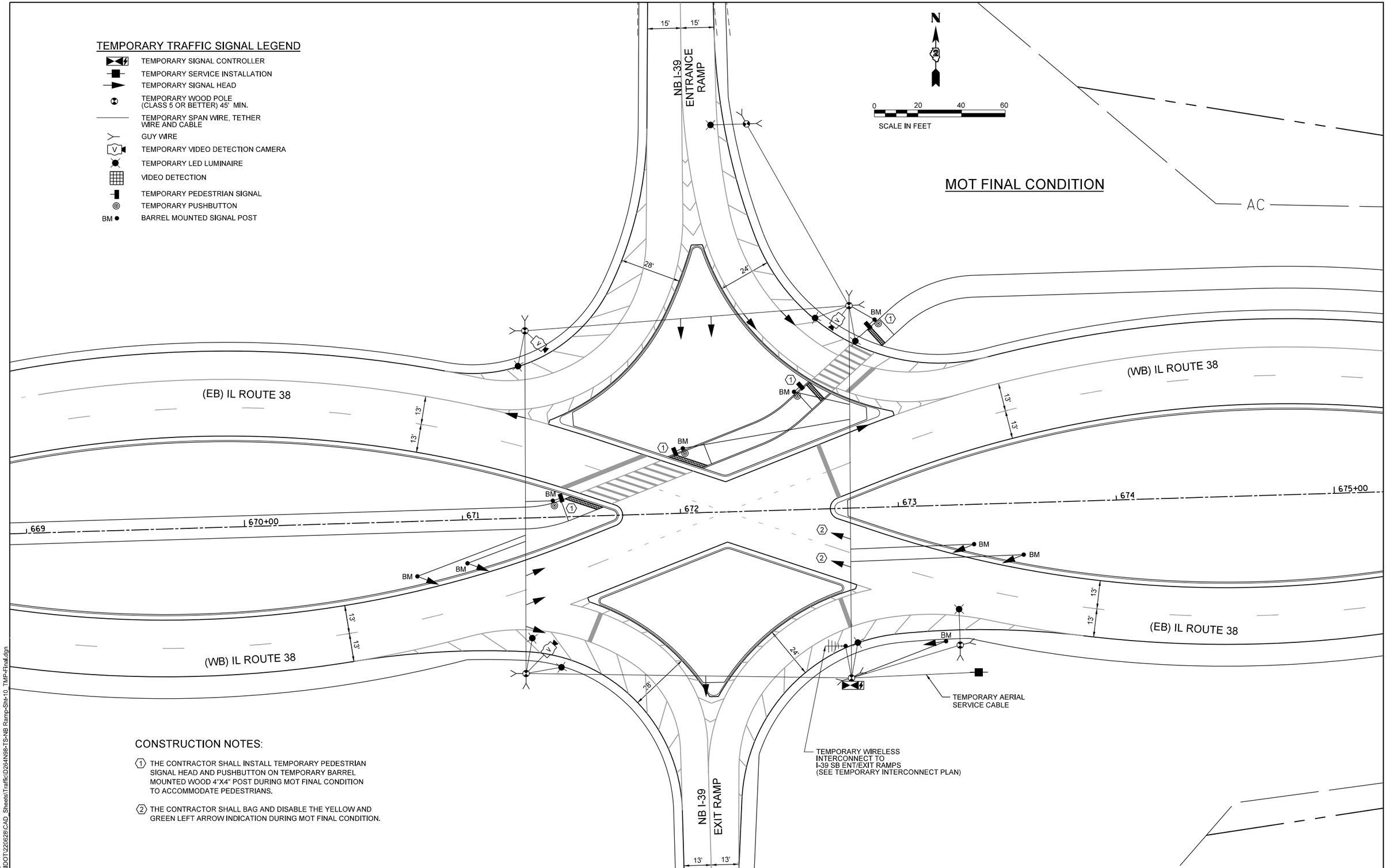

CONSTRUCTION NOTES:

1. THE CONTRACTOR SHALL INSTALL TEMPORARY PEDESTRIAN SIGNAL HEAD AND PUSHBUTTON ON TEMPORARY BARREL MOUNTED WOOD 4"X4" POST DURING MOT FINAL CONDITION TO ACCOMMODATE PEDESTRIANS.

2. THE CONTRACTOR SHALL BAG AND DISABLE THE YELLOW AND GREEN LEFT ARROW INDICATION DURING MOT FINAL CONDITION.

MODEL: Default
FILE NAME: N:\IDOT\220628\CAD_Sheets\Traffic\D264N98-TS-NB Ramp-Sht-10_TMP-Final.dgn

CHRISTOPHER B. BURKE ENGINEERING, LTD. 9575 W. Higgins Road, Suite 600 Rosemont, Illinois 60018 (847) 823-0500	USER NAME = nhowellindgren	DESIGNED - BC	REVISED -
		DRAWN - FPB	REVISED -
		CHECKED - GMZ	REVISED -
	PLOT DATE = 2/6/2025	DATE -	REVISED -

STATE OF ILLINOIS
DEPARTMENT OF TRANSPORTATION

TEMPORARY TRAFFIC SIGNAL INSTALLATION PLAN
IL ROUTE 38 AND I-39 NB ENT / EXIT RAMPS

SCALE: 1:40 | SHEET OF SHEETS | STA. TO STA.

F.A.P. RTE.	SECTION	COUNTY	TOTAL SHEETS	SHEET NO.
567	141-1HBR-3 & (9,10) R-3	OGLE	508	378
		CONTRACT NO. 64N98		
		ILLINOIS FED. AID PROJECT		

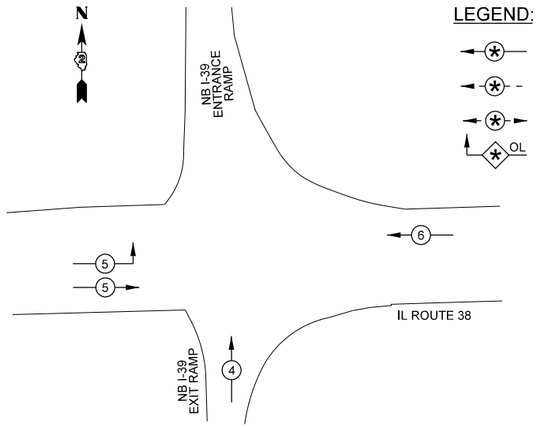

LEGEND:

- PROTECTED PHASE
- PROTECTED/PERMITTED PHASE PEDESTRIAN PHASE
- OL — OVERLAP

PROPOSED CONTROLLER SEQUENCE

6 — NUMBER REFERS TO ASSOCIATED PHASE

TEMPORARY SIGNAL CABLE LEGEND

- TEMPORARY SIGNAL CONTROLLER
- TEMPORARY SERVICE INSTALLATION
- G — DIRECTIONAL SIGNAL SECTION, 12"
- R — TEMPORARY SIGNAL SECTION, 12"
- 3 — ELECTRIC CABLE DENOTING NUMBER OF CONDUCTORS
- V — VENDOR CABLE
- TEMPORARY WOOD POLE
- V — TEMPORARY VIDEO DETECTION CAMERA
- TEMPORARY LED LUMINAIRE

CONSTRUCTION NOTES:

1. THE CONTRACTOR SHALL BAG AND DISABLE THE YELLOW LEFT ARROW INDICATION DURING MOT EXISTING CONDITION.
2. SUPPLEMENTAL TEMPORARY LIGHTING POLES ARE INCLUDED IN THE UNIT COST OF PAY ITEM: TEMPORARY TRAFFIC SIGNAL INSTALLATION. SEE SPECIAL PROVISION FOR MORE INFORMATION.

LEGEND:

= BAGGED AND DISABLED

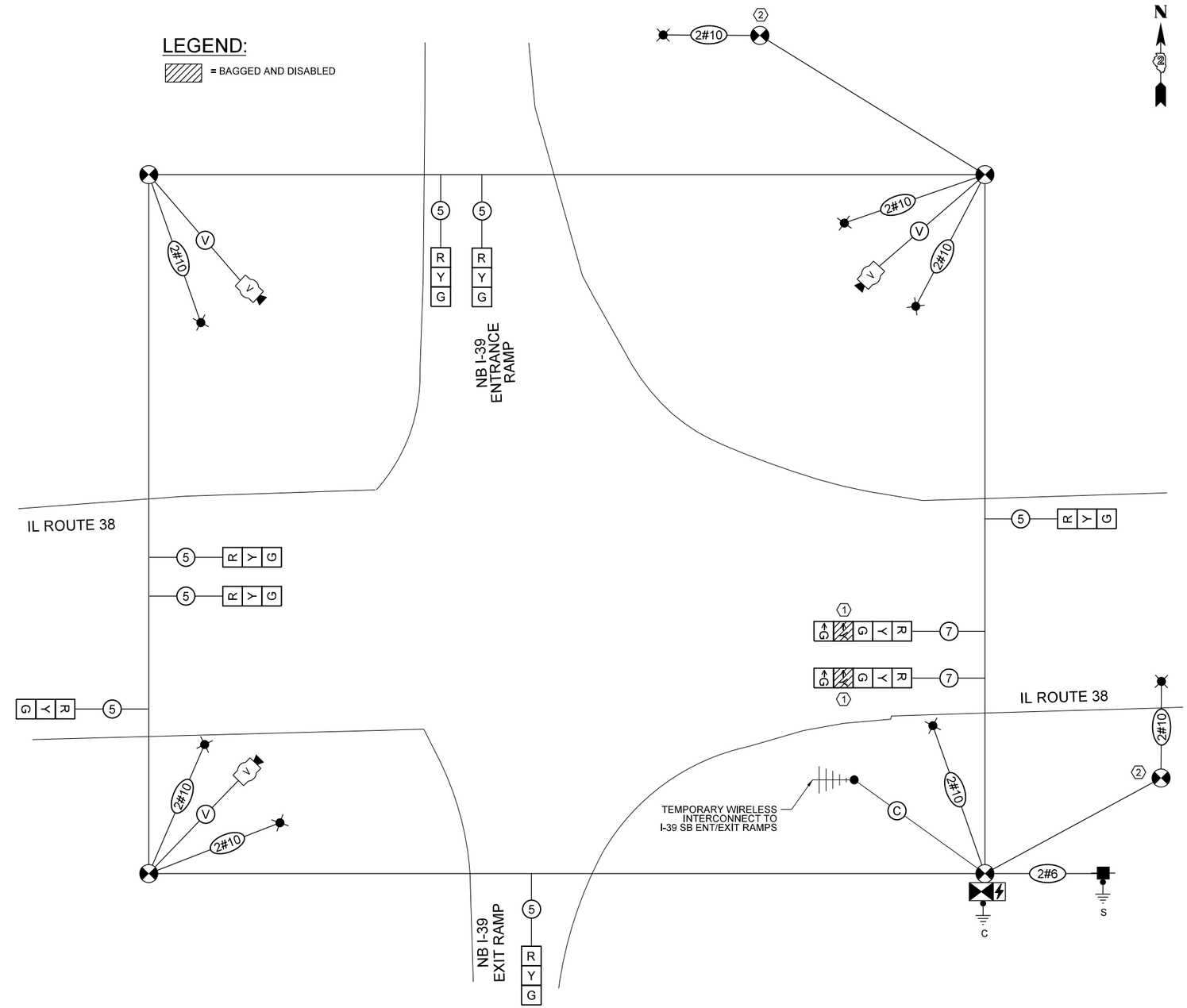

MOT EXISTING CONDITION
TEMPORARY CABLE PLAN

NOT TO SCALE

MODEL: Default
FILE NAME: N:\IDOT\220628\CAD_Sheets\Traffic\D264N98-TS-NB Ramp-Sht-11_TMP-CAB1.dgn

CHRISTOPHER B. BURKE ENGINEERING, LTD.
9575 W. Higgins Road, Suite 600
Rosemont, Illinois 60018
(847) 823-0500

USER NAME = nhowellindgren	DESIGNED - BC	REVISED -	STATE OF ILLINOIS DEPARTMENT OF TRANSPORTATION
	DRAWN - FPB	REVISED -	
	CHECKED - GMZ	REVISED -	
PLOT DATE = 2/6/2025	DATE -	REVISED -	

TRAFFIC SIGNAL PLANS
TEMPORARY CABLE PLAN
IL ROUTE 38 AND I-39 NB ENT / EXIT RAMPS

SCALE: 1:40 | SHEET OF SHEETS | STA. TO STA.

F.A.P. RTE.	SECTION	COUNTY	TOTAL SHEETS	SHEET NO.
567	141-1HBR-3 & (9,10) R-3	OGLE	508	379
		CONTRACT NO. 64N98		
		ILLINOIS	FED. AID PROJECT	

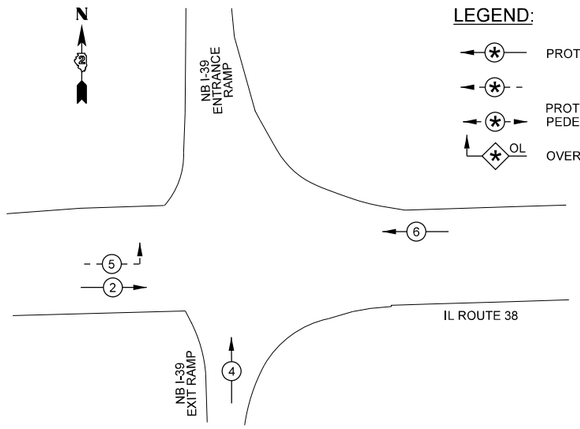

LEGEND:

- PROTECTED PHASE
- PROTECTED/PERMITTED PHASE
- PEDESTRIAN PHASE
- OL — OVERLAP

PROPOSED CONTROLLER SEQUENCE

6 — NUMBER REFERS TO ASSOCIATED PHASE

TEMPORARY SIGNAL CABLE LEGEND

- TEMPORARY SIGNAL CONTROLLER
- TEMPORARY SERVICE INSTALLATION
- G — DIRECTIONAL SIGNAL SECTION, 12"
- R — TEMPORARY SIGNAL SECTION, 12"
- 3 — ELECTRIC CABLE DENOTING NUMBER OF CONDUCTORS
- V — VENDOR CABLE
- TEMPORARY WOOD POLE
- V — TEMPORARY VIDEO DETECTION CAMERA
- TEMPORARY LED LUMINAIRE

CONSTRUCTION NOTE:

1. THE CONTRACTOR SHALL UNBAG AND ENERGIZE THE YELLOW LEFT ARROW INDICATION.

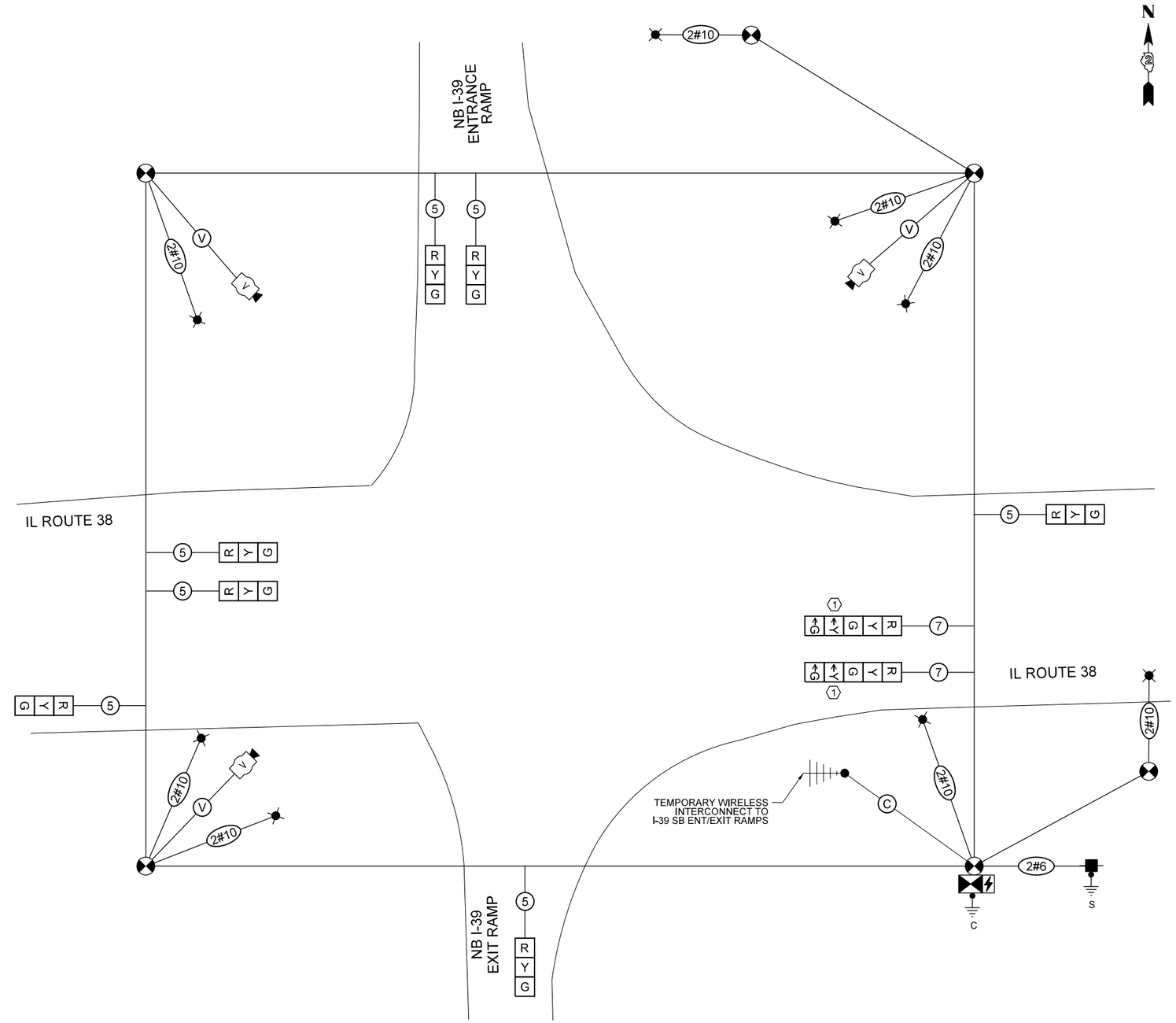

MOT STAGE 1A, MOT STAGE 1B, AND MOT STAGE 1C

TEMPORARY CABLE PLAN

NOT TO SCALE

MODEL: Default
FILE NAME: N:\DOT\220628\CAD_Sheets\Traffic\D284N98-TS-NB Ramp-Sht-12_TMP-CAB2.dgn

CHRISTOPHER B. BURKE ENGINEERING, LTD. 9575 W. Higgins Road, Suite 600 Rosemont, Illinois 60018 (847) 823-0500	USER NAME = nhowellindgren	DESIGNED - BC	REVISED -	STATE OF ILLINOIS DEPARTMENT OF TRANSPORTATION	TRAFFIC SIGNAL PLANS TEMPORARY CABLE PLAN IL ROUTE 38 AND I-39 NB ENT / EXIT RAMPS
		DRAWN - FPB	REVISED -		
		CHECKED - GMZ	REVISED -		
	PLOT DATE = 2/6/2025	DATE -	REVISED -		SCALE: 1:40 SHEET OF SHEETS STA. TO STA.

F.A.P. RTE.	SECTION	COUNTY	TOTAL SHEETS	SHEET NO.
567	141-1HBR-3 & (9,10) R-3	OGLE	508	380
		CONTRACT NO. 64N98		
		ILLINOIS FED. AID PROJECT		

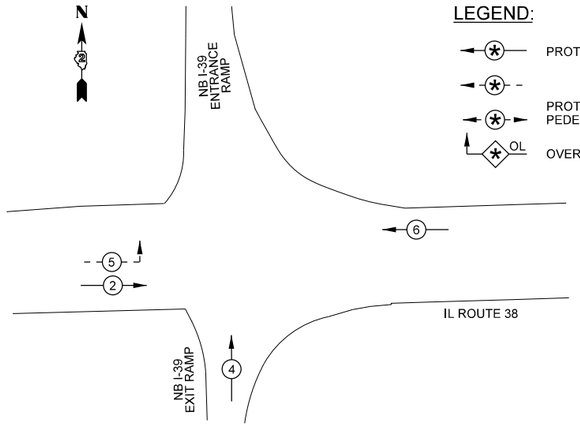

PROPOSED CONTROLLER SEQUENCE

6 — NUMBER REFERS TO ASSOCIATED PHASE

LEGEND:

- PROTECTED PHASE
- PROTECTED/PERMITTED PHASE
- PEDESTRIAN PHASE
- OL — OVERLAP

TEMPORARY SIGNAL CABLE LEGEND

- TEMPORARY SIGNAL CONTROLLER
- TEMPORARY SERVICE INSTALLATION
- G — DIRECTIONAL SIGNAL SECTION, 12"
- R — TEMPORARY SIGNAL SECTION, 12"
- 3 — ELECTRIC CABLE DENOTING NUMBER OF CONDUCTORS
- V — VENDOR CABLE
- TEMPORARY WOOD POLE
- V — TEMPORARY VIDEO DETECTION CAMERA
- TEMPORARY LED LUMINAIRE

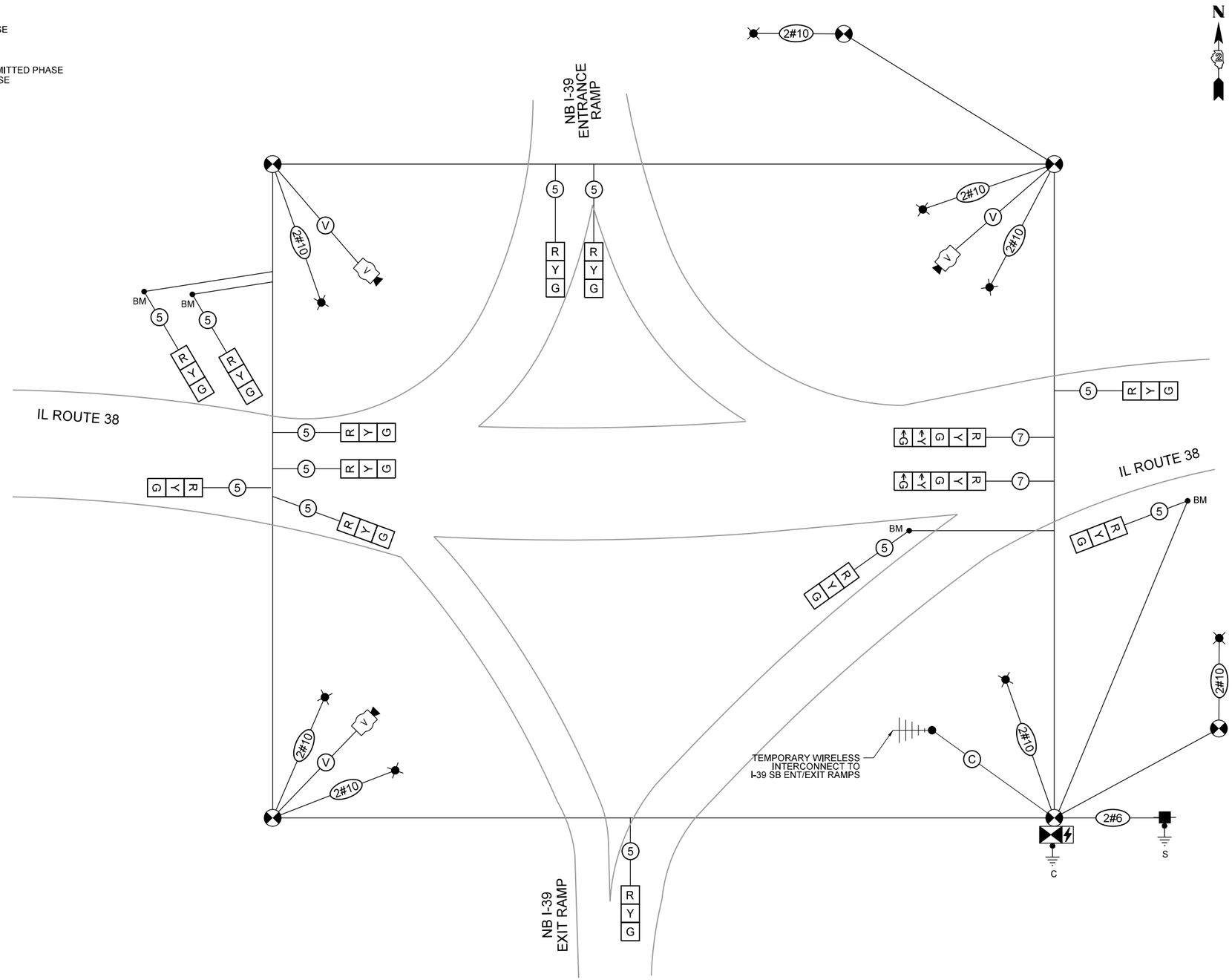

MOT STAGE 1D
TEMPORARY CABLE PLAN

NOT TO SCALE

MODEL: Default
FILE NAME: N:\DOT\220628\CAD_Sheets\Traffic\D264N98-TS-NB Ramp-Sht-13_TMP-CAB3.dgn

CHRISTOPHER B. BURKE ENGINEERING, LTD. 9575 W. Higgins Road, Suite 600 Rosemont, Illinois 60018 (847) 823-0500	USER NAME = nhowellilindgren	DESIGNED - BC	REVISED -
		DRAWN - FPB	REVISED -
		CHECKED - GMZ	REVISED -
	PLOT DATE = 2/6/2025	DATE -	REVISED -

STATE OF ILLINOIS
DEPARTMENT OF TRANSPORTATION

TRAFFIC SIGNAL PLANS
TEMPORARY CABLE PLAN
IL ROUTE 38 AND I-39 NB ENT / EXIT RAMPS

SCALE: 1:40 | SHEET OF SHEETS | STA. TO STA.

F.A.P. RTE.	SECTION	COUNTY	TOTAL SHEETS	SHEET NO.
567	141-1HBR-3 & (9,10) R-3	OGLE	508	381

CONTRACT NO. 64N98

ILLINOIS | FED. AID PROJECT

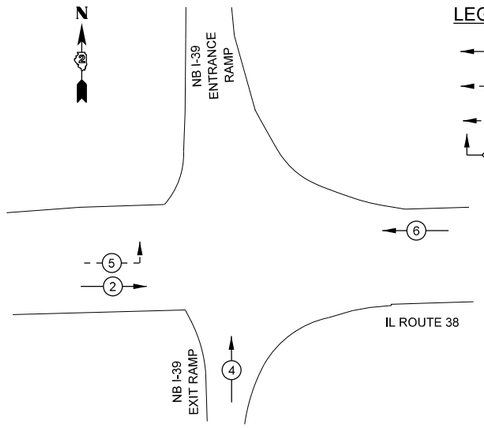

LEGEND:

- PROTECTED PHASE
- PROTECTED/PERMITTED PHASE
- PEDESTRIAN PHASE
- OL — OVERLAP

PROPOSED CONTROLLER SEQUENCE

6 — NUMBER REFERS TO ASSOCIATED PHASE

TEMPORARY SIGNAL CABLE LEGEND

- TEMPORARY SIGNAL CONTROLLER
- TEMPORARY SERVICE INSTALLATION
- G — DIRECTIONAL SIGNAL SECTION, 12"
- R — TEMPORARY SIGNAL SECTION, 12"
- 3 — ELECTRIC CABLE DENOTING NUMBER OF CONDUCTORS
- V — VENDOR CABLE
- TEMPORARY WOOD POLE
- V — TEMPORARY VIDEO DETECTION CAMERA
- TEMPORARY LED LUMINAIRE

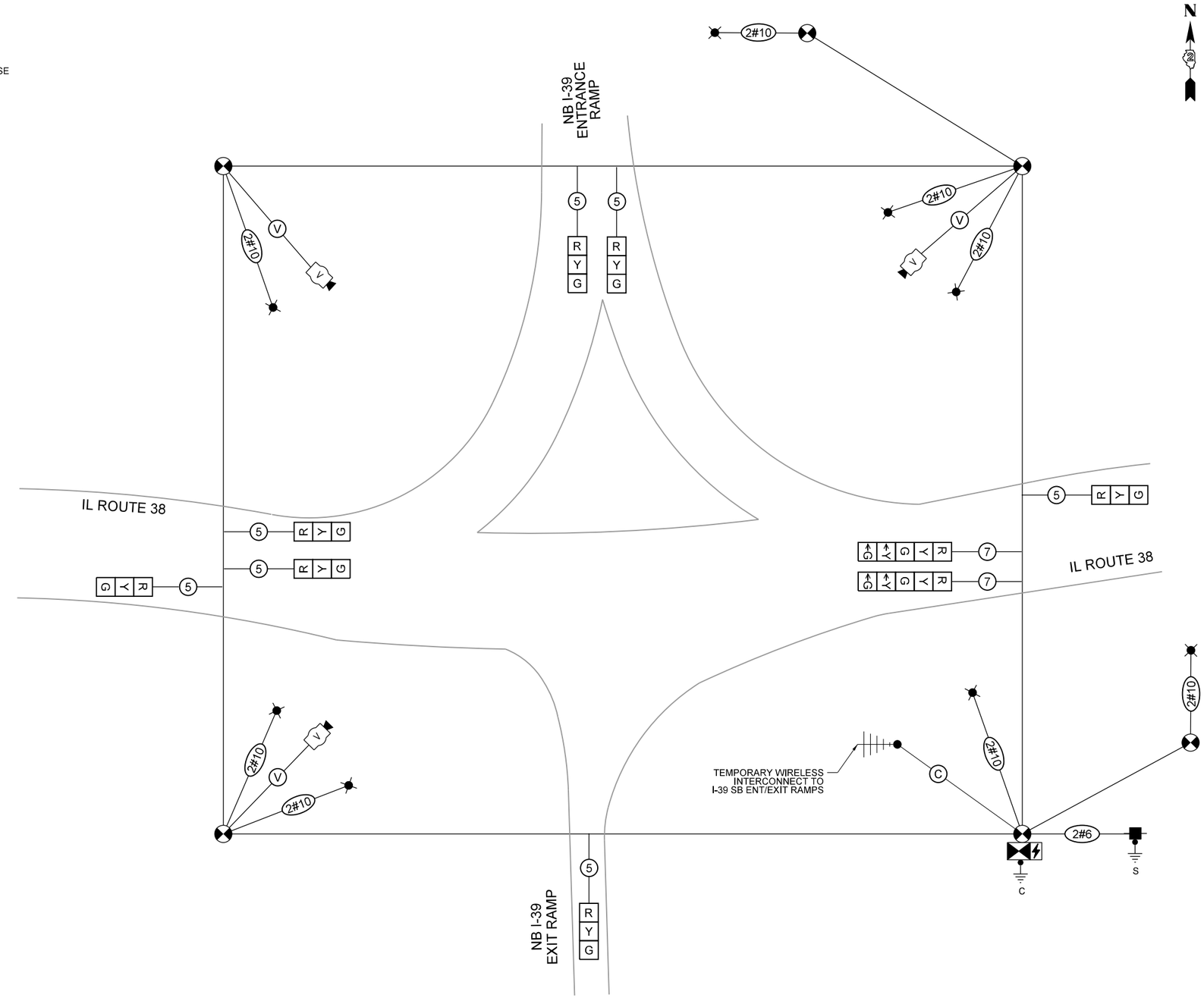

MOT STAGE 2A AND STAGE 2B
TEMPORARY CABLE PLAN

NOT TO SCALE

MODEL: Default
FILE NAME: N:\IDOT\220628\CAD_Sheets\Traffic\D264N98-TS-NB Ramp-Sht-14_TMP-CAB4.dgn

CHRISTOPHER B. BURKE ENGINEERING, LTD. 9575 W. Higgins Road, Suite 600 Rosemont, Illinois 60018 (847) 823-0500	USER NAME = nhowellilindgren	DESIGNED - BC	REVISED -	STATE OF ILLINOIS DEPARTMENT OF TRANSPORTATION	TRAFFIC SIGNAL PLANS TEMPORARY CABLE PLAN IL ROUTE 38 AND I-39 NB ENT / EXIT RAMPS
		DRAWN - FPB	REVISED -		
		CHECKED - GMZ	REVISED -		
	PLOT DATE = 2/6/2025	DATE -	REVISED -		SCALE: 1:40 SHEET OF SHEETS STA. TO STA.

F.A.P. RTE.	SECTION	COUNTY	TOTAL SHEETS	SHEET NO.
567	141-1HBR-3 & (9,10) R-3	OGLE	508	382
		CONTRACT NO. 64N98		
		ILLINOIS	FED. AID PROJECT	

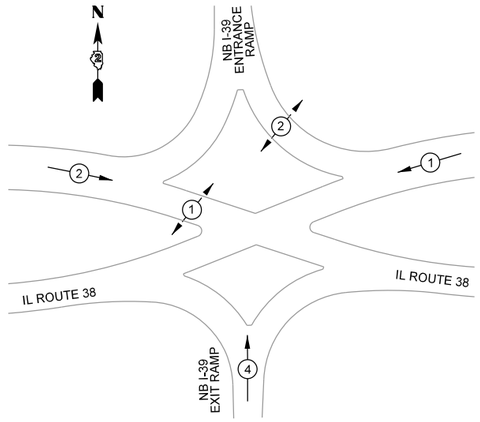

PROPOSED CONTROLLER SEQUENCE

6 — NUMBER REFERS TO ASSOCIATED PHASE

LEGEND:

- PROTECTED PHASE
- PROTECTED/PERMITTED PHASE
- PEDESTRIAN PHASE
- OL — OVERLAP

TEMPORARY SIGNAL CABLE LEGEND

- TEMPORARY SIGNAL CONTROLLER
- TEMPORARY SERVICE INSTALLATION
- G — DIRECTIONAL SIGNAL SECTION, 12"
- R — TEMPORARY SIGNAL SECTION, 12"
- 3 — ELECTRIC CABLE DENOTING NUMBER OF CONDUCTORS
- V — VENDOR CABLE
- TEMPORARY WOOD POLE
- V — TEMPORARY VIDEO DETECTION CAMERA
- TEMPORARY LED LUMINAIRE

CONSTRUCTION NOTES:

1. THE CONTRACTOR SHALL BAG AND DISABLE THE YELLOW AND GREEN LEFT ARROW INDICATION DURING MOT FINAL CONDITION.
2. THE CONTRACTOR SHALL INSTALL TEMPORARY PEDESTRIAN SIGNAL HEAD AND PUSHBUTTON ON TEMPORARY BARREL MOUNTED WOOD 4"X4" POST DURING MOT FINAL CONDITION TO ACCOMMODATE PEDESTRIANS.

LEGEND:

= BAGGED AND DISABLED

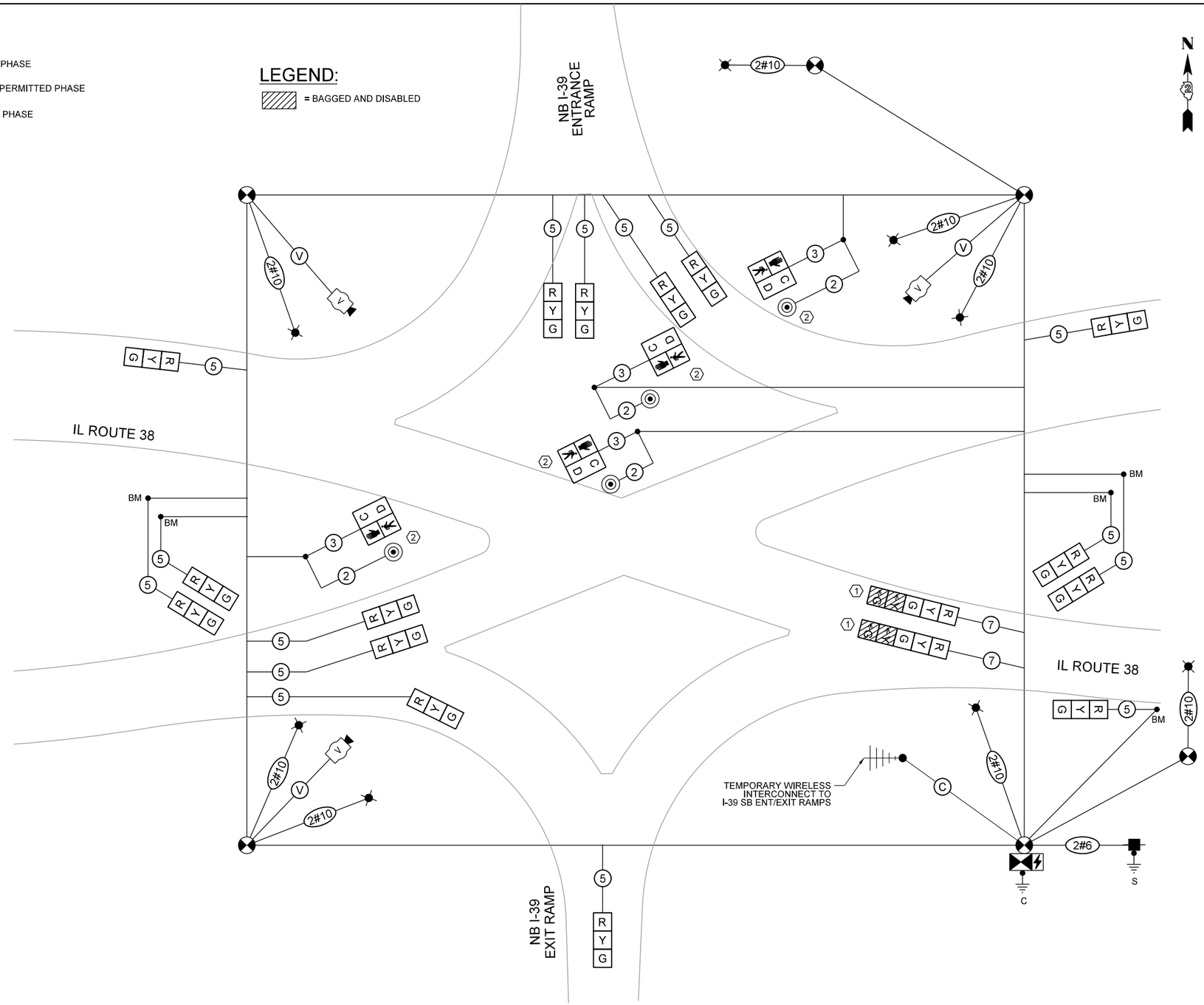

MOT FINAL CONDITION
TEMPORARY CABLE PLAN

NOT TO SCALE

MODEL: Default
FILE NAME: N:\DOT\2220628\CAD_Sheets\Traffic\D284N98-TS-NB Ramp-Sht-15_TMP-CAB5.dgn

CHRISTOPHER B. BURKE ENGINEERING, LTD.
9575 W. Higgins Road, Suite 600
Rosemont, Illinois 60018
(847) 823-0500

USER NAME = nhowellindgren	DESIGNED - BC	REVISED -	
	DRAWN - FPB	REVISED -	
	CHECKED - GMZ	REVISED -	
PLOT DATE = 2/6/2025	DATE -	REVISED -	

STATE OF ILLINOIS
DEPARTMENT OF TRANSPORTATION

TRAFFIC SIGNAL PLANS
TEMPORARY CABLE PLAN
IL ROUTE 38 AND I-39 NB ENT / EXIT RAMPS

SCALE: 1:40 | SHEET OF SHEETS | STA. TO STA.

F.A.P. RTE.	SECTION	COUNTY	TOTAL SHEETS	SHEET NO.
567	141-1HBR-3 & (9,10) R-3	OGLE	508	383
		CONTRACT NO. 64N98		
		ILLINOIS	FED. AID PROJECT	

TRAFFIC SIGNAL LEGEND

EXISTING	PROPOSED	
		SIGNAL HEAD WITH BACKPLATE
		SIGNAL HEAD WITHOUT BACKPLATE
		HANDHOLE, PCC
		DOUBLE HANDHOLE, PCC
		JUNCTION BOX
		CONDUIT
		STEEL MAST ARM ASSEMBLY AND POLE
		STEEL COMBINATION MAST ARM ASSEMBLY AND POLE WITH LUMINAIRE (LENGTH SPECIFIED)
		TRAFFIC SIGNAL POST
		SERVICE POLE
		CONTROLLER CABINET WITH CONCRETE FOUNDATION
V	V	TRAFFIC SIGNAL VIDEO DETECTOR SYSTEM
		TRAFFIC SIGNAL PEDESTRIAN SIGNAL HEAD
		TRAFFIC SIGNAL PEDESTRIAN PUSH BUTTON -(APS) ACCESSIBLE PEDESTRIAN PUSH-BUTTON
		SIGN
UPS	UPS	UNINTERRUPTABLE POWER SUPPLY

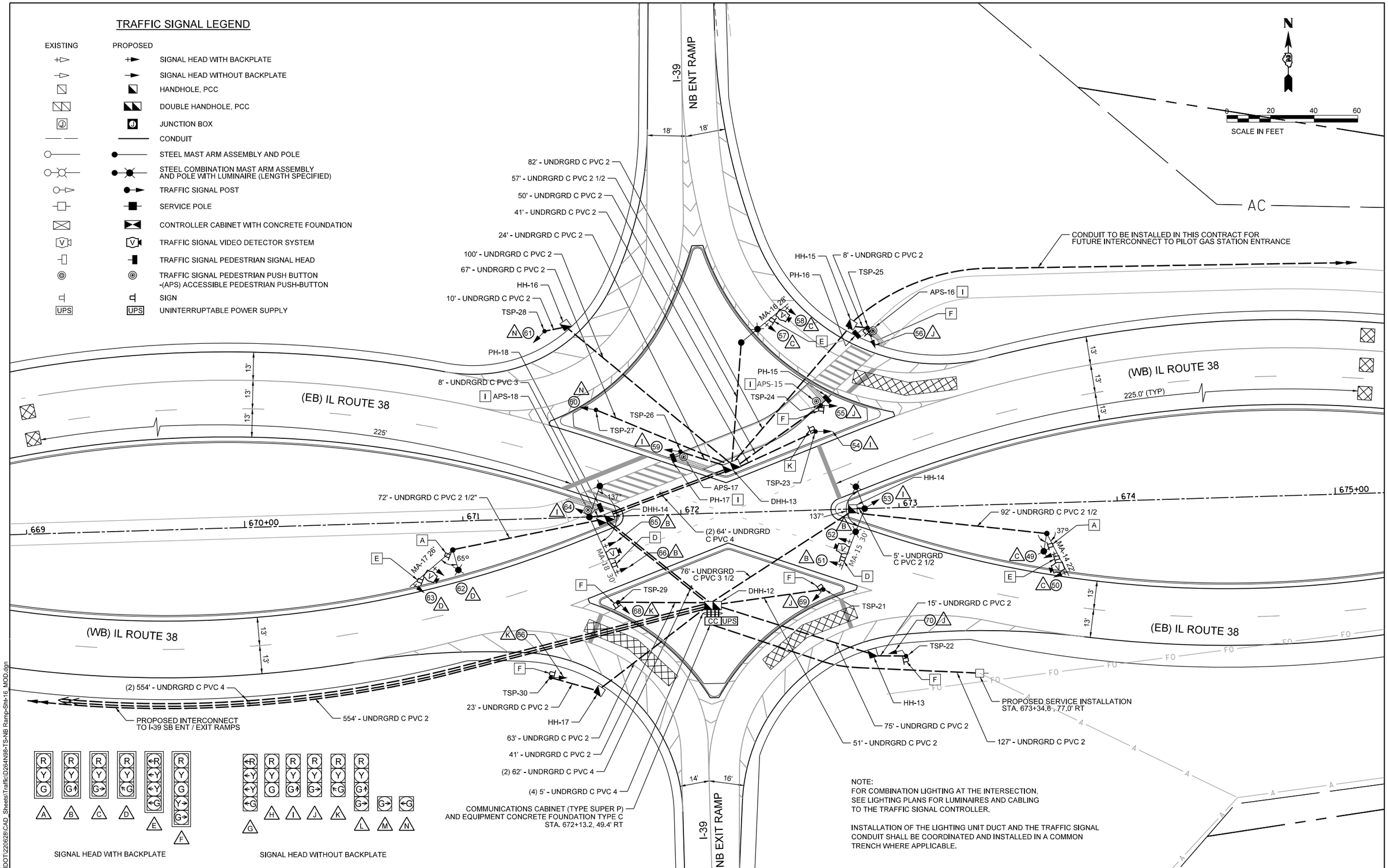

NOTE:
FOR COMBINATION LIGHTING AT THE INTERSECTION, SEE LIGHTING PLANS FOR LUMINAIRES AND CABLING TO THE TRAFFIC SIGNAL CONTROLLER.

INSTALLATION OF THE LIGHTING UNIT DUCT AND THE TRAFFIC SIGNAL CONDUIT SHALL BE COORDINATED AND INSTALLED IN A COMMON TRENCH WHERE APPLICABLE.

MODEL: Default
FILE NAME: N:\DOT\220628\CAD_Sheets\Traffic\D264N98-TS-NB Ramp-Sht-16_MOD.dgn

CHRISTOPHER B. BURKE ENGINEERING, LTD.
9575 W. Higgins Road, Suite 600
Rosemont, Illinois 60018
(847) 823-0500

USER NAME = nhowellllindgren	DESIGNED - BC	REVISED -	
	DRAWN - FPB	REVISED -	
	CHECKED - GMZ	REVISED -	
PLOT DATE = 2/6/2025	DATE -	REVISED -	

STATE OF ILLINOIS
DEPARTMENT OF TRANSPORTATION

TRAFFIC SIGNAL PLANS
IL ROUTE 38 AND I-39 NB ENT / EXIT RAMPS

SCALE: 1:40 | SHEET OF SHEETS | STA. TO STA.

F.A.P. RTE.	SECTION	COUNTY	TOTAL SHEETS	SHEET NO.
567	141-1HBR-3 & (9,10) R-3	OGLE	508	384
		CONTRACT NO. 64N98		
		ILLINOIS	FED. AID PROJECT	

PROPOSED TRAFFIC SIGNAL LEGEND (SHEET DETAILS)

- (5) ELECTRIC CABLE DENOTING NUMBER OF CONDUCTORS
- SIGNAL FACE WITH BACKPLATE
- SIGNAL FACE WITHOUT BACKPLATE
- G DIRECTIONAL SIGNAL SECTION
- R SIGNAL SECTION 12"
- C D WALK/DON'T WALK SECTION + COUNT DOWN
- P GROUND WIRE (POLE)
- MA GROUND WIRE (MAST ARM)
- APS PROPOSED TRAFFIC SIGNAL PEDESTRIAN PUSH BUTTON -(APS) ACCESSIBLE PEDESTRIAN PUSH-BUTTON
- V VIDEO DETECTION CAMERA
- (V) VENDOR CABLE
- UPS UNINTERRUPTABLE POWER SUPPLY
- CONTROLLER CABINET
- TRAFFIC SIGNAL SERVICE INSTALLATION
- CC COMMUNICATIONS CABINET

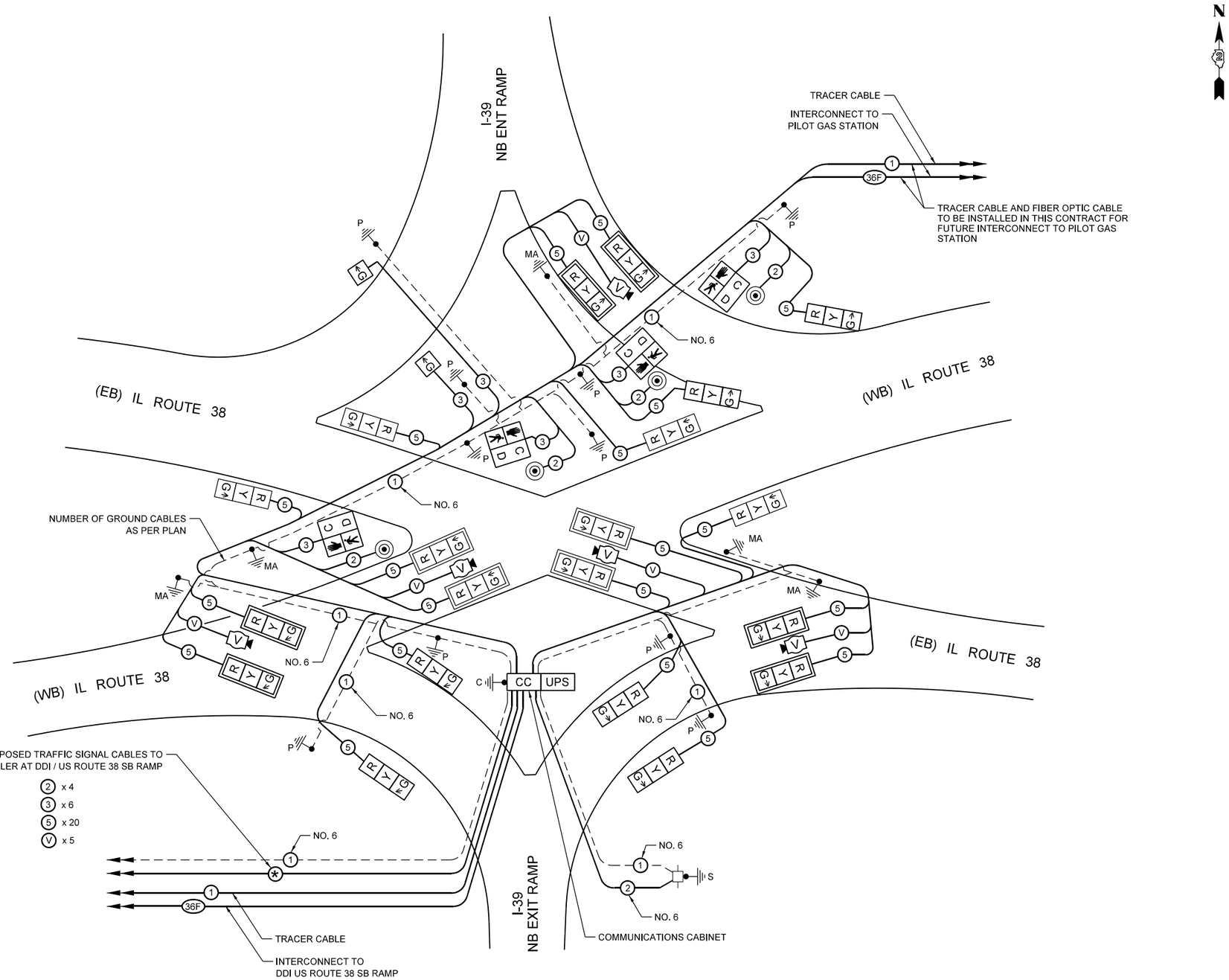

MODEL: Default
FILE NAME: N:\IDOT\220628\CAD_Sheets\Traffic\D284N98-TS-NB Ramp-Sht-17_CAB.dgn

CHRISTOPHER B. BURKE ENGINEERING, LTD. 9575 W. Higgins Road, Suite 600 Rosemont, Illinois 60018 (847) 823-0500	USER NAME = nhowellilindgren	DESIGNED - BC	REVISED -	STATE OF ILLINOIS DEPARTMENT OF TRANSPORTATION	TRAFFIC SIGNAL PLANS CABLE PLAN IL ROUTE 38 AND I-39 NB ENT / EXIT RAMPS	F.A.P. RTE.	SECTION	COUNTY	TOTAL SHEETS	SHEET NO.
		DRAWN - FPB	REVISED -			567	141-1HBR-3 & (9,10) R-3	OGLE	508	385
		CHECKED - GMZ	REVISED -					CONTRACT NO. 64N98		
	PLOT DATE = 2/6/2025	DATE -	REVISED -		SCALE: 1:40 SHEET OF SHEETS STA. TO STA.		ILLINOIS	FED. AID PROJECT		

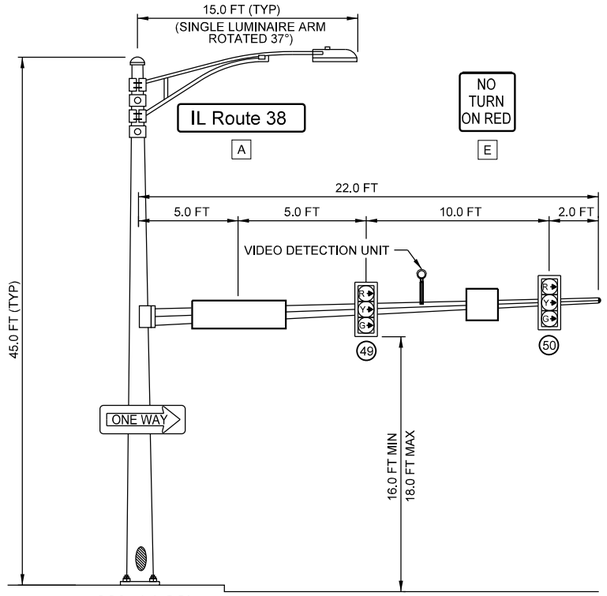

MA-14 22'

NORTHBOUND (RIGHT TURN) TRAFFIC SIGNAL
IL ROUTE 38 AND I-39 ENT / EXIT RAMP

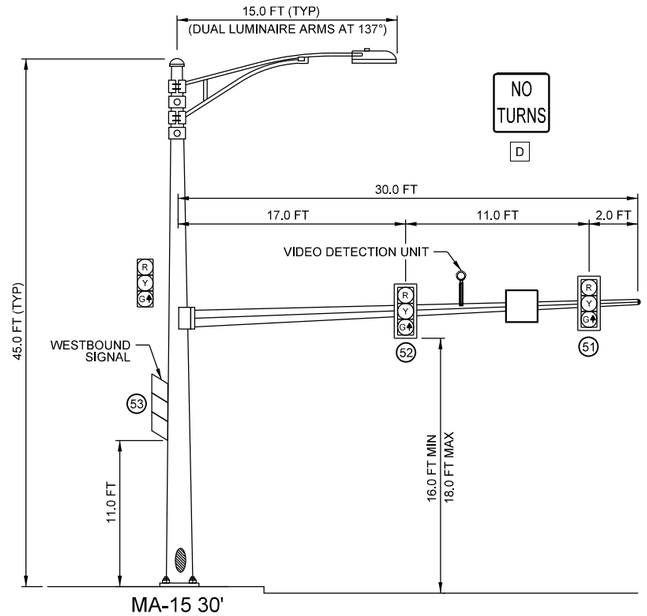

MA-15 30'
(36 IN DIA FDN)

EASTBOUND TRAFFIC SIGNAL
IL ROUTE 38 AND I-39 ENT / EXIT RAMP

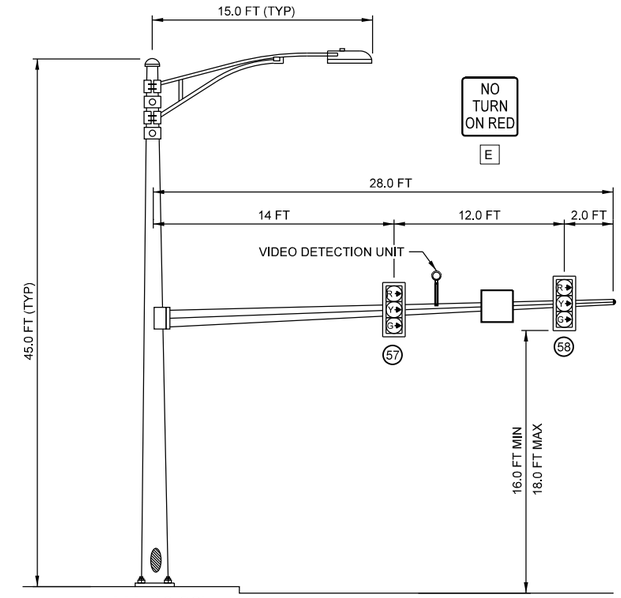

MA-16 28'

WESTBOUND (RIGHT TURN) TRAFFIC SIGNAL
IL ROUTE 38 AND I-39 ENT / EXIT RAMP

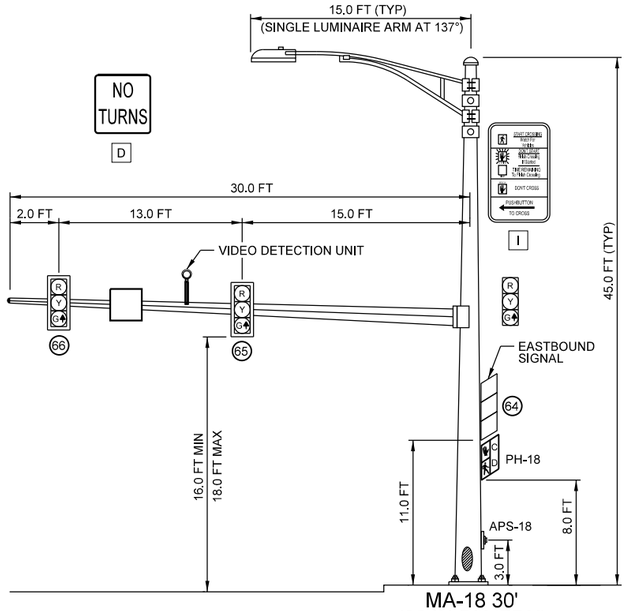

MA-18 30'
(36 IN DIA FDN)

WESTBOUND TRAFFIC SIGNAL
IL ROUTE 38 AND I-39 ENT / EXIT RAMP

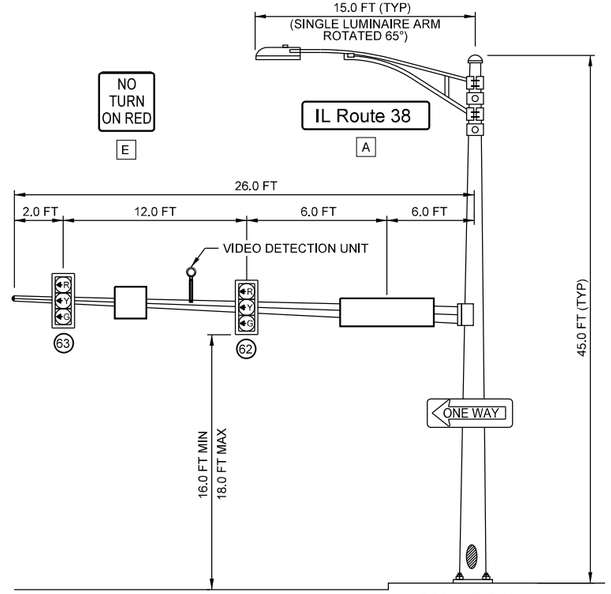

MA-17 26'

NORTHBOUND (LEFT TURN) TRAFFIC SIGNAL
IL ROUTE 38 AND I-39 ENT / EXIT RAMP

MODEL: Default
FILE NAME: N:\IDOT\220628\CAD_Sheets\Traffic\D284N98-TS-NB Ramp-Sht-18_DET.dgn

CHRISTOPHER B. BURKE ENGINEERING, LTD.
9575 W. Higgins Road, Suite 600
Rosemont, Illinois 60018
(847) 823-0500

USER NAME = nhowellilindgren	DESIGNED - BC	REVISED -	
	DRAWN - FPB	REVISED -	
	CHECKED - GMZ	REVISED -	
PLOT DATE = 2/6/2025	DATE -	REVISED -	

STATE OF ILLINOIS
DEPARTMENT OF TRANSPORTATION

TRAFFIC SIGNAL MAST ARM DETAILS
IL ROUTE 38 AND I-39 NB ENT / EXIT RAMPS

SCALE: 1:40 | SHEET OF SHEETS | STA. TO STA.

F.A.P. RTE.	SECTION	COUNTY	TOTAL SHEETS	SHEET NO.
567	141-1HBR-3 & (9,10) R-3	OGLE	508	386
		CONTRACT NO. 64N98		
		ILLINOIS	FED. AID PROJECT	

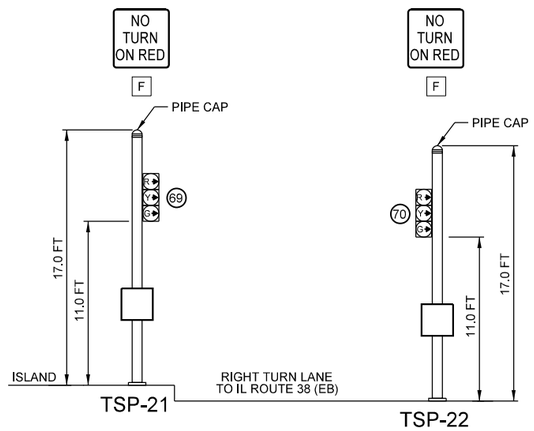

SOUTHEAST QUADRANT
NORTHBOUND (RIGHT TURN) TRAFFIC SIGNAL
IL ROUTE 38 AND I-39 ENT / EXIT RAMP

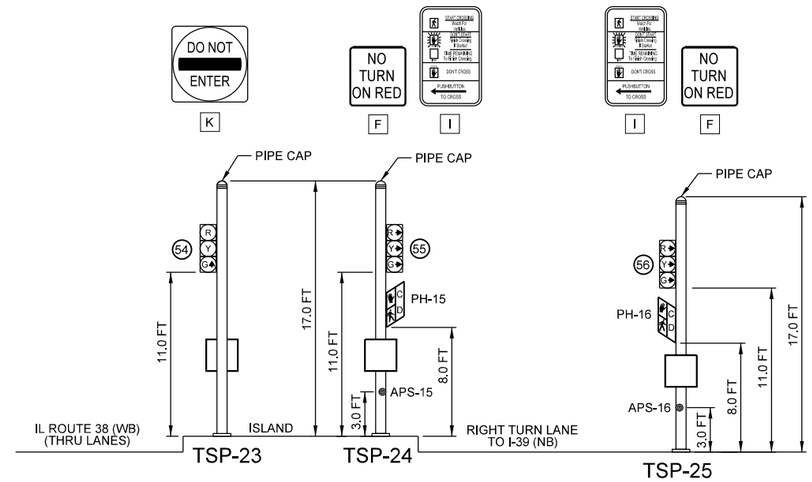

NORTHEAST QUADRANT
WESTBOUND & WESTBOUND (RIGHT TURN) TRAFFIC SIGNAL
IL ROUTE 38 AND I-39 ENT / EXIT RAMP

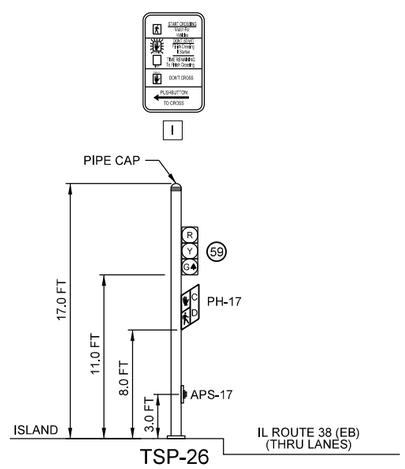

NORTHWEST QUADRANT
EASTBOUND TRAFFIC SIGNAL
IL ROUTE 38 AND I-39 ENT / EXIT RAMP

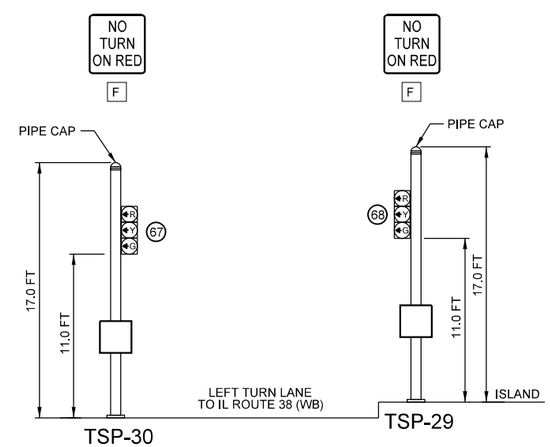

SOUTHWEST QUADRANT
NORTHBOUND (LEFT TURN) TRAFFIC SIGNAL
IL ROUTE 38 AND I-39 ENT / EXIT RAMP

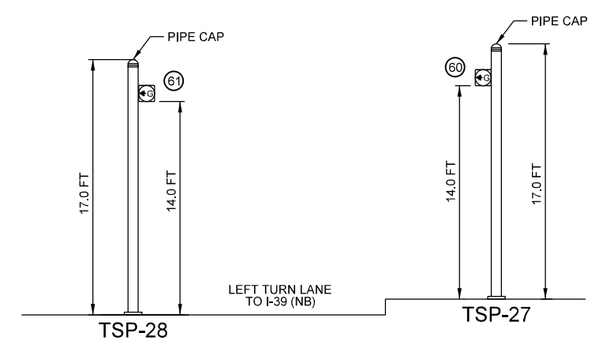

NORTHWEST QUADRANT
EASTBOUND FREE-FLOW LEFT TRAFFIC SIGNAL
IL ROUTE 38 AND I-39 ENT / EXIT RAMP

MODEL: Default
FILE NAME: N:\IDOT\220628\CAD_Sheets\Traffic\D284N98-TS-NB Ramp-Sht-19_DET.dgn

CHRISTOPHER B. BURKE ENGINEERING, LTD.
9575 W. Higgins Road, Suite 600
Rosemont, Illinois 60018
(847) 823-0500

USER NAME = nhowellilindgren	DESIGNED - BC	REVISED -	
	DRAWN - FPB	REVISED -	
	CHECKED - GMZ	REVISED -	
PLOT DATE = 2/6/2025	DATE -	REVISED -	

STATE OF ILLINOIS
DEPARTMENT OF TRANSPORTATION

TRAFFIC SIGNAL POST DETAILS
IL ROUTE 38 AND I-39 NB ENT / EXIT RAMPS

SCALE: 1:40 | SHEET OF SHEETS | STA. TO STA.

F.A.P. RTE.	SECTION	COUNTY	TOTAL SHEETS	SHEET NO.
567	141-1HBR-3 & (9,10) R-3	OGLE	508	387
		CONTRACT NO. 64N98		
		ILLINOIS	FED. AID PROJECT	

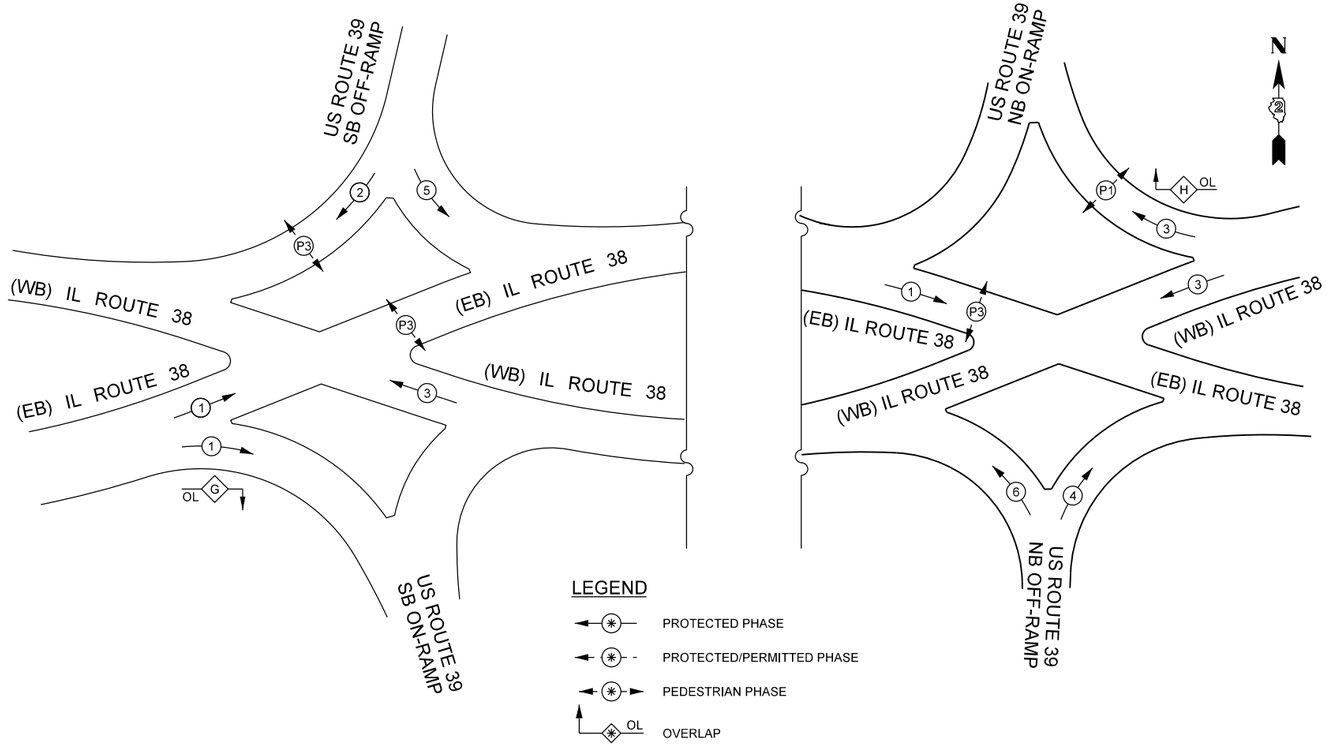

LEGEND

- PROTECTED PHASE
- PROTECTED/PERMITTED PHASE
- PEDESTRIAN PHASE
- OVERLAP

PHASE DESIGNATION DIAGRAM

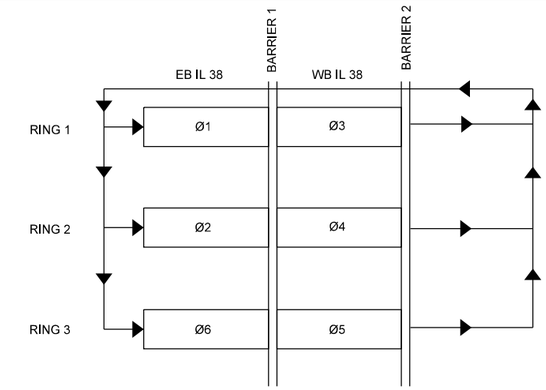

PROPOSED
PHASE, RING AND BARRIER DESIGN

TRAFFIC MOVEMENT	Ø NUMBER	OVERLAP	NOTES
EB IL 38 AT SB I-39 ENT RAMP (RT)	Ø1 + Ø3	G	
WB IL 38 AT NB I-39 ENT RAMP (RT)	Ø1 + Ø3	H	
PEDESTRIAN CROSSING SB I-39 EXT RAMP (WB)	ØP3		
PEDESTRIAN CROSSING NB I-39 ENT RAMP (EB)	ØP3		
PEDESTRIAN CROSSING NB I-39 ENT RAMP (WB)	ØP1		PED PROTECT, NOTE 1

PHASING ASSIGNMENT

EASTBOUND PHASE

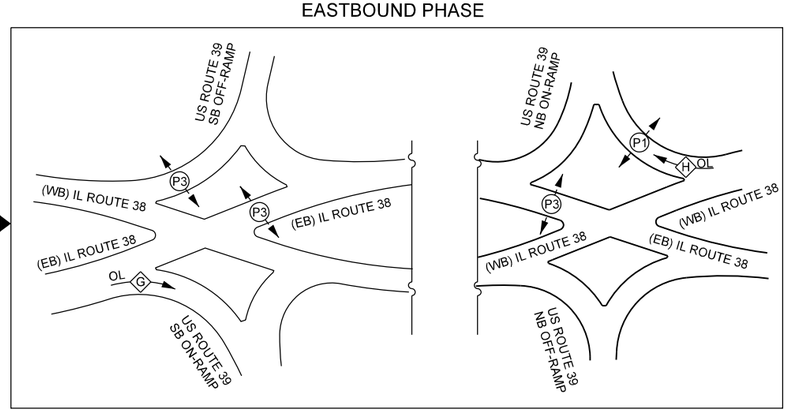

WESTBOUND PHASE

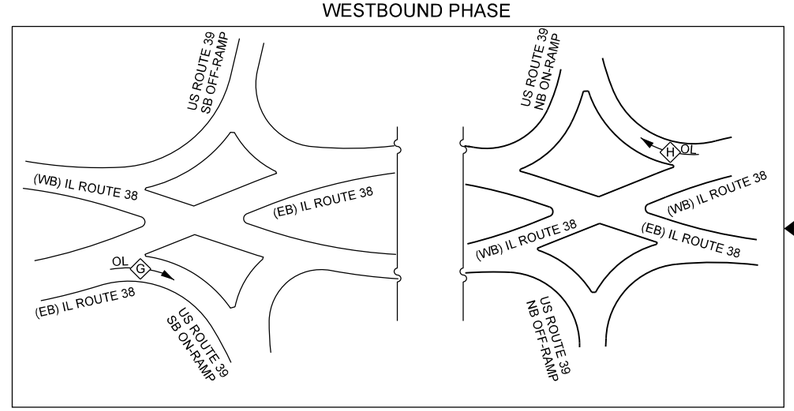

NOTES:
1. PEDESTRIAN PROTECT - N.B. ON RAMP:
UPON PUSH-BUTTON ACTIVATION OF P1 PHASE AT N.B. ON RAMP CROSSING. OVERLAP "H" SHALL NOT DISPLAY GREEN UNTIL P1 HAS TERMINATED.

SEQUENCE OF OPERATIONS / OVERLAP DESIGNATION

MODEL: Default
FILE NAME: N:\IDOT\220628\CAD_Sheets\Traffic\D284N98-TS-NB Ramp-Sht-20_Phasing.dgn

CHRISTOPHER B. BURKE ENGINEERING, LTD.
9575 W. Higgins Road, Suite 600
Rosemont, Illinois 60018
(847) 823-0500

USER NAME = nhowellilindgren	DESIGNED - BC	REVISED -	
	DRAWN - FPB	REVISED -	
	CHECKED - GMZ	REVISED -	
PLOT DATE = 2/6/2025	DATE -	REVISED -	

STATE OF ILLINOIS
DEPARTMENT OF TRANSPORTATION

TRAFFIC SIGNAL PHASE DESIGNATION DIAGRAM
IL ROUTE 38 AND I-39 DDI

SCALE: 1:40 | SHEET OF SHEETS | STA. TO STA.

F.A.P. RTE.	SECTION	COUNTY	TOTAL SHEETS	SHEET NO.
567	141-1HBR-3 & (9,10) R-3	OGLE	508	388

CONTRACT NO. 64N98

ILLINOIS | FED. AID PROJECT

TEMPORARY INTERCONNECT PLAN LEGEND:

- TEMPORARY CONTROLLER WITH UNINTERRUPTIBLE POWER SUPPLY (UPS)
- TEMPORARY WOOD POLE
- TEMPORARY WIRELESS RADIO INTERCONNECT
- TEMPORARY AERIAL CABLE
- TEMPORARY SERVICE POLE

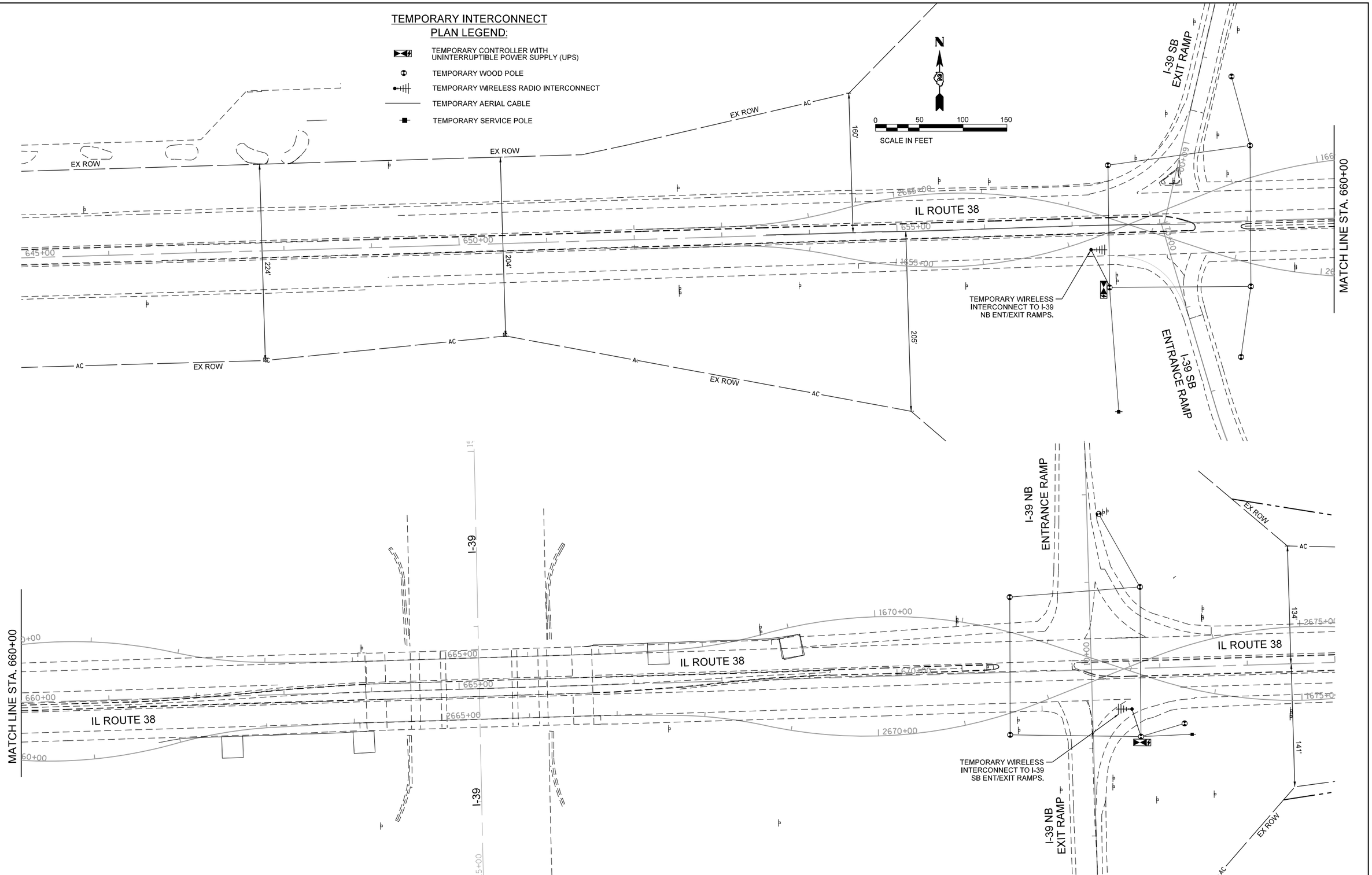

MODEL: Default
FILE NAME: N:\IDOT\220628\CAD_Sheets\Traffic\D284N98-TS-INT-TMP-Sht-01.dgn

CHRISTOPHER B. BURKE ENGINEERING, LTD.
9575 W. Higgins Road, Suite 600
Rosemont, Illinois 60018
(847) 823-0500

USER NAME = nhowellindgren	DESIGNED - BC	REVISED -	
	DRAWN - FPB	REVISED -	
	CHECKED - GMZ	REVISED -	
PLOT DATE = 2/6/2025	DATE -	REVISED -	

STATE OF ILLINOIS
DEPARTMENT OF TRANSPORTATION

TEMPORARY INTERCONNECT PLAN
IL ROUTE 38 AND I-39 NB & SB ENT / EXIT RAMPS

SCALE: 1:100 | SHEET OF SHEETS | STA. TO STA.

F.A.P. RTE.	SECTION	COUNTY	TOTAL SHEETS	SHEET NO.
567	141-1HBR-3 & (9,10) R-3	OGLE	508	389
		CONTRACT NO. 64N98		
	ILLINOIS	FED. AID PROJECT		

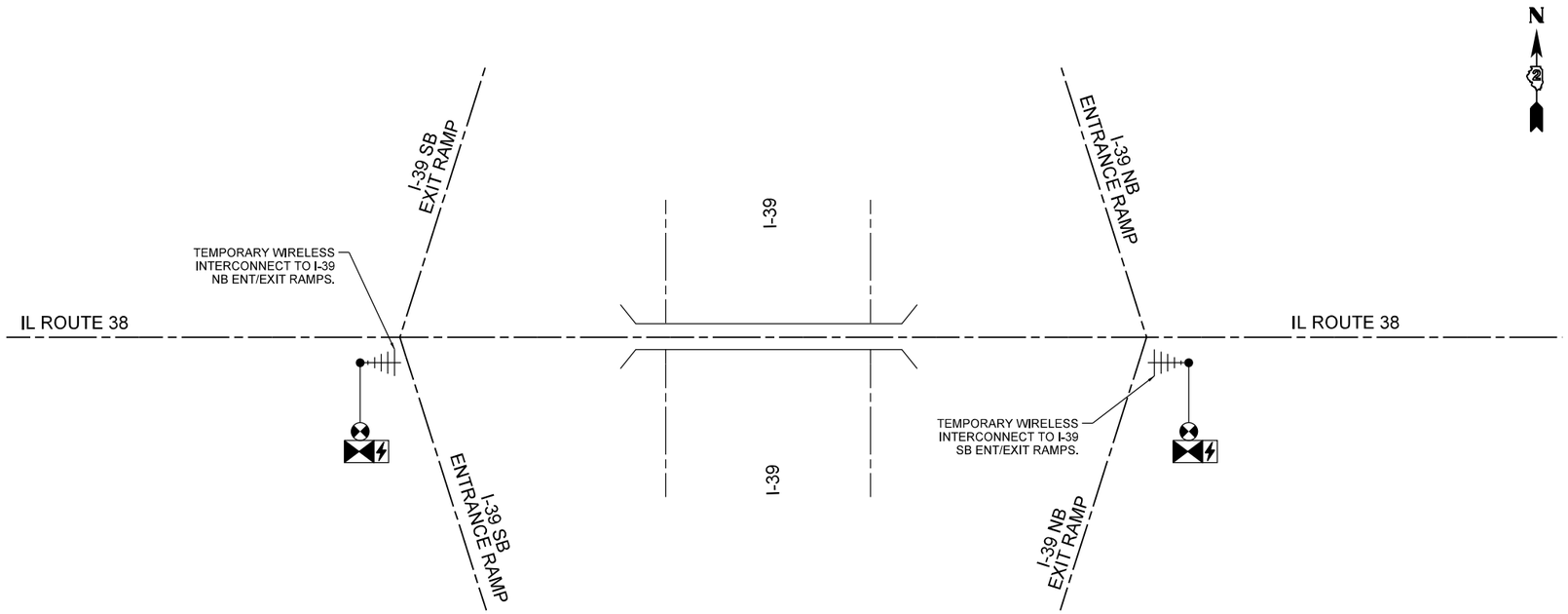

MODEL: Default
FILE NAME: N:\DOT\2220628\CAD_Sheets\Traffic\D264N98-TS-INT-TMP-Sht-02_SCH.dgn

CHRISTOPHER B. BURKE ENGINEERING, LTD. 9575 W. Higgins Road, Suite 600 Rosemont, Illinois 60018 (847) 823-0500	USER NAME = nhowellindgren	DESIGNED - BC	REVISED -	STATE OF ILLINOIS DEPARTMENT OF TRANSPORTATION	TEMPORARY INTERCONNECT PLAN IL ROUTE 38 AND I-39 NB & SB ENT / EXIT RAMPS
		DRAWN - FPB	REVISED -		
		CHECKED - GMZ	REVISED -		
	PLOT DATE = 2/6/2025	DATE -	REVISED -		SCALE: 1:100 SHEET OF SHEETS STA. TO STA.

F.A.P. RTE.	SECTION	COUNTY	TOTAL SHEETS	SHEET NO.
567	141-1HBR-3 & (9,10) R-3	OGLE	508	390
		CONTRACT NO. 64N98		
		ILLINOIS FED. AID PROJECT		

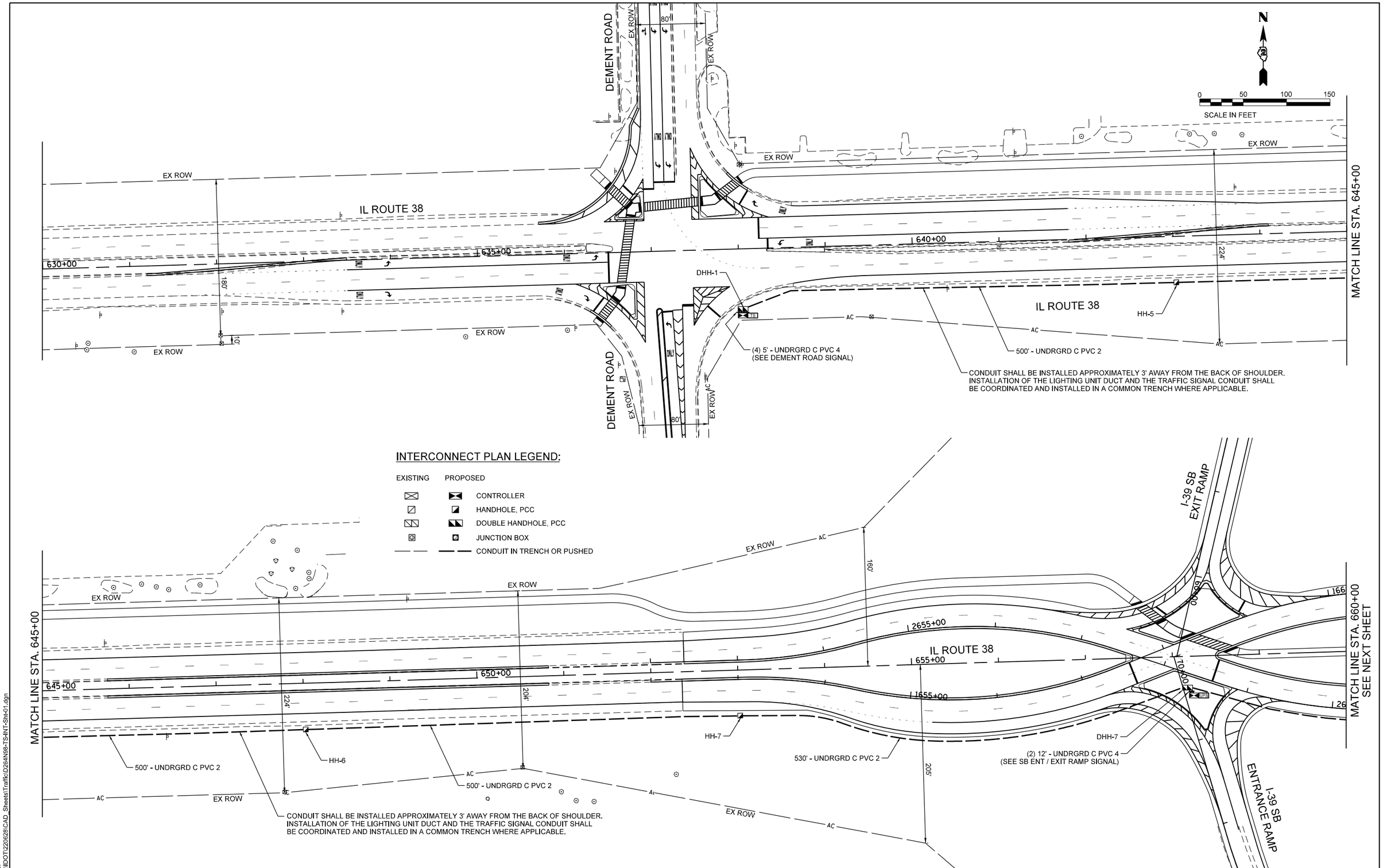

MODEL: Default
FILE NAME: N:\IDOT\220628\CAD_Sheets\Traffic\D284N98-TS-INT-Sht-01.dgn

CHRISTOPHER B. BURKE ENGINEERING, LTD.
9575 W. Higgins Road, Suite 600
Rosemont, Illinois 60018
(847) 823-0500

USER NAME = nhowellilindgren	DESIGNED - BC	REVISED -	
	DRAWN - FPB	REVISED -	
	CHECKED - GMZ	REVISED -	
PLOT DATE = 2/6/2025	DATE -	REVISED -	

STATE OF ILLINOIS
DEPARTMENT OF TRANSPORTATION

PROPOSED INTERCONNECT PLAN
IL ROUTE 38 FROM DEMENT ROAD
TO I-39 NB & SB ENT / EXIT RAMPS

SCALE: 1:100 | SHEET OF SHEETS | STA. TO STA.

F.A.P. RTE.	SECTION	COUNTY	TOTAL SHEETS	SHEET NO.
567	141-1HBR-3 & (9,10) R-3	OGLE	508	391
		CONTRACT NO. 64N98		
	ILLINOIS	FED. AID PROJECT		

INTERCONNECT PLAN LEGEND:

EXISTING	PROPOSED
	CONTROLLER
	HANDHOLE, PCC
	DOUBLE HANDHOLE, PCC
	JUNCTION BOX
	CONDUIT IN TRENCH OR PUSHED

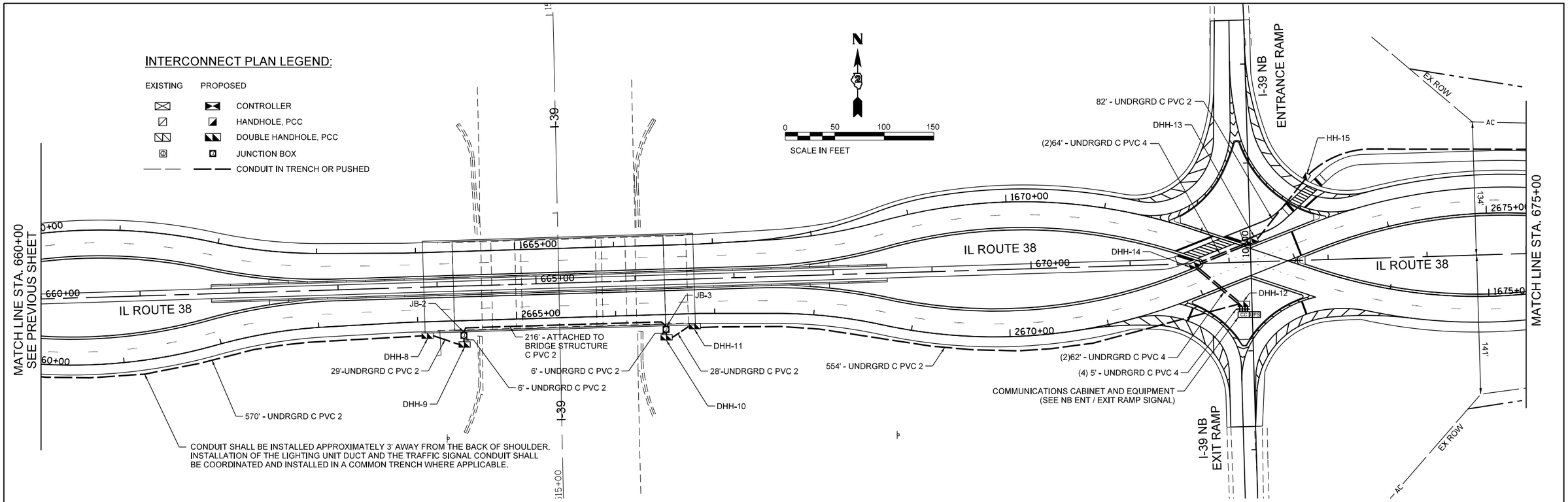

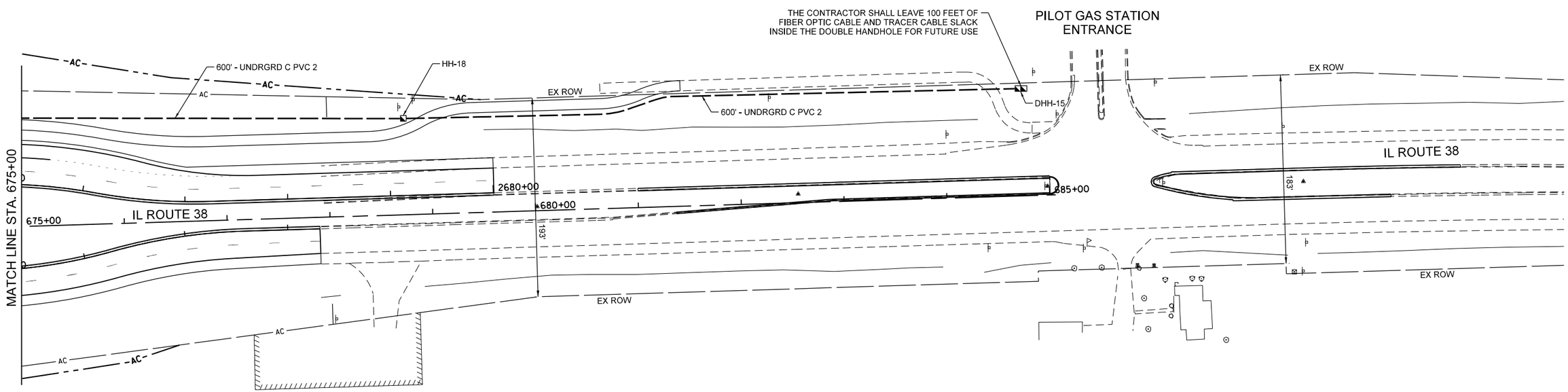

MODEL: Default
FILE NAME: N:\IDOT\220628\CAD_Sheets\Traffic\D284N98-TS-INT-Sht-02.dgn

CHRISTOPHER B. BURKE ENGINEERING, LTD. 9575 W. Higgins Road, Suite 600 Rosemont, Illinois 60018 (847) 823-0500	USER NAME = nhowellilindgren	DESIGNED - BC	REVISED -	STATE OF ILLINOIS DEPARTMENT OF TRANSPORTATION	PROPOSED INTERCONNECT PLAN IL ROUTE 38 FROM DEMENT ROAD TO I-39 NB & SB ENT / EXIT RAMPS	F.A.P. RTE.	SECTION	COUNTY	TOTAL SHEETS	SHEET NO.
		DRAWN - FPB	REVISED -			567	141-1HBR-3 & (9,10) R-3	OGLE	508	392
		CHECKED - GMZ	REVISED -					CONTRACT NO. 64N98		
	PLOT DATE = 2/6/2025	DATE -	REVISED -		SCALE: 1:100 SHEET OF SHEETS STA. TO STA.		ILLINOIS	FED. AID PROJECT		

SCHEDULE OF HANDHOLE AND JUNCTION BOX QUANTITIES

REF.	LOCATION	TYPE	STATION	OFFSET
IL ROUTE 38 INTERCONNECT				
HH-5	SOUTH SIDE - IL ROUTE 38	HANDHOLE	643+02.59	53.01' RT
HH-6	SOUTH SIDE - IL ROUTE 38	HANDHOLE	648+01.73	53.29' RT
HH-7	SOUTH SIDE - IL ROUTE 38	HANDHOLE	653+01.49	52.56' RT
DHH-7	SOUTH ISLAND - SB RAMPS	DBL HANDHOLE	658+16.27	36.14' RT
DHH-8	SOUTH SIDE - IL ROUTE 38	DBL HANDHOLE	663+88.67	49.25' RT
JB-1	SOUTH SIDE - IL ROUTE 38 (ABUTMENT)	JUN BX SS AS 24X24X10	664+25.57	49.84' RT
DHH-9	SOUTH SIDE - IL ROUTE 38	DBL HANDHOLE	664+25.77	59.24' RT
JB-2	SOUTH SIDE - IL ROUTE 38 (ABUTMENT)	JUN BX SS AS 24X24X10	666+29.82	49.94' RT
DHH-10	SOUTH SIDE - IL ROUTE 38	DBL HANDHOLE	666+29.84	58.22' RT
DHH-11	SOUTH SIDE - IL ROUTE 38	DBL HANDHOLE	666+58.68	47.88' RT
HH-18	NORTH SIDE - IL ROUTE 38	HANDHOLE	678+74.00	93.46' LT
DHH-15	NORTH SIDE - IL ROUTE 38	DBL HANDHOLE	684+74.98	104.09' LT

SCHEDULE OF QUANTITIES

CODE NO.	ITEM DESCRIPTION	UNIT	QUANTITY
81028350	UNDERGROUND CONDUIT, PVC, 2" DIA.	FOOT	4639
81101001	CONDUIT ATTACHED TO STRUCTURE, RIGID NON-METALLIC, 2" DIA.	FOOT	216
81101002	CONDUIT ATTACHED TO STRUCTURE, RIGID NON-METALLIC, 4" DIA.	FOOT	432
81300948	JUNCTION BOX, STAINLESS STEEL, ATTACHED TO STRUCTURE, 24" X 24" X 10"	EACH	4
81400100	HANDHOLE	EACH	4
81400300	DOUBLE HANDHOLE	EACH	5
87300925	ELECTRIC CABLE IN CONDUIT, TRACER, NO. 14 1C	FOOT	5194
X8710024	FIBER OPTIC CABLE IN CONDUIT, NO. 62.5/125, MM12F SM24F	FOOT	5252
Z0033056	OPTIMIZE TRAFFIC SIGNAL SYSTEM	EACH	1

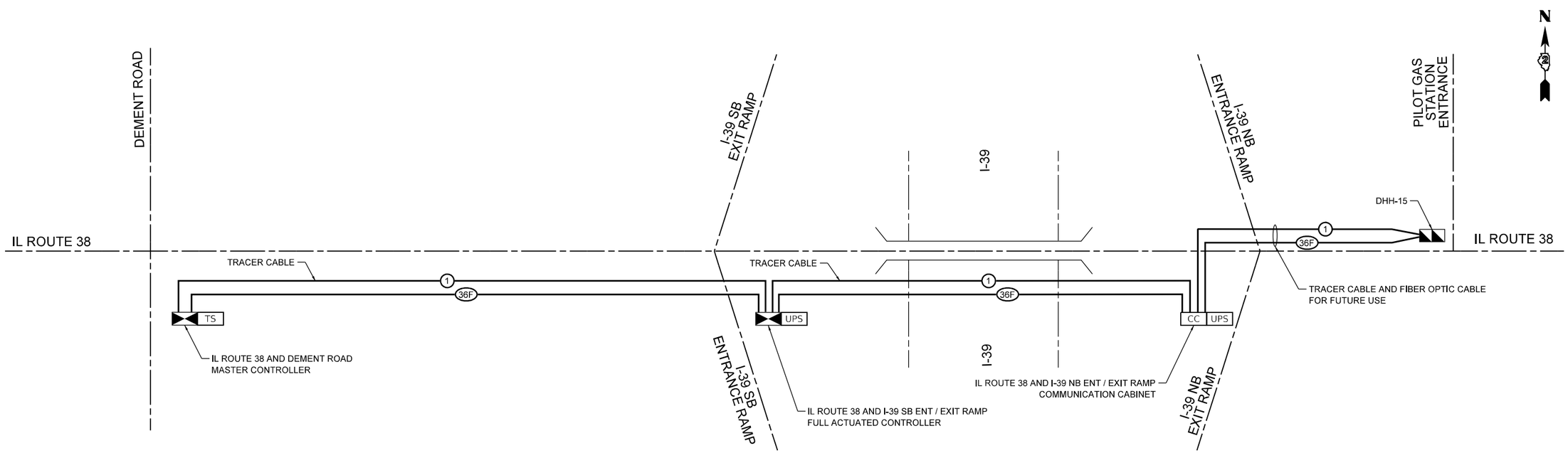

MODEL: Default
FILE NAME: N:\DOT\2220628\CAD_Sheets\Traffic\D264N98-TS-INT-Sht-03_SCH.dgn

CHRISTOPHER B. BURKE ENGINEERING, LTD.
9575 W. Higgins Road, Suite 600
Rosemont, Illinois 60018
(847) 823-0500

USER NAME = nhowellllindgren	DESIGNED - BC	REVISED -	
	DRAWN - FPB	REVISED -	
	CHECKED - GMZ	REVISED -	
PLOT DATE = 2/6/2025	DATE -	REVISED -	

STATE OF ILLINOIS
DEPARTMENT OF TRANSPORTATION

PROPOSED INTERCONNECT PLAN
IL ROUTE 38 FROM DEMENT ROAD
TO I-39 NB & SB ENT / EXIT RAMPS

SCALE: 1:100 | SHEET OF SHEETS | STA. TO STA.

F.A.P. RTE.	SECTION	COUNTY	TOTAL SHEETS	SHEET NO.
567	141-1HBR-3 & (9,10) R-3	OGLE	508	393
		CONTRACT NO. 64N98		
		ILLINOIS	FED. AID PROJECT	

Illinois Department of Transportation
Division of Highways
IDOT

SOIL BORING LOG

Page 1 of 1

Date 8/22/22

ROUTE FAI 39 & FAP 567 DESCRIPTION P92-016-09 - Proposed traffic signals LOGGED BY W. Garza

SECTION 141-1 HBR-3 & (9,10)R-3 LOCATION Dement, SE 1/4 17, NE 1/4 20, SEC. , TWP. 40N, RNG. 2E

COUNTY Ogle DRILLING METHOD Hollow Stem Auger HAMMER TYPE CME-45 Automatic

STRUCT. NO.
Station

Latitude 41° 56' 04.82"
Longitude -89° 01' 37.93"
Northing 1,920,779.3286
Easting 2,606,612.5922

BORING NO. B-1
Station 656+90
Offset 27.00ft Lt of WBL
Ground Surface Elev. 815.86 ft

Surface Water Elev. ft
Stream Bed Elev. ft

Groundwater Elev.:
First Encounter 791.4 ft ▼
Upon Completion 791.4 ft ▽
After Hrs. ft

Northing and Easting were calculated using the ILHP-WF coordinate system

Description	Elev.	Depth (ft)	Blows (/6")	UCS Qu (tsf)	Moist (%)
MEDIUM dark brown SILTY CLAY LOAM	813.86			0.6 P	
VERY STIFF tan SANDY LOAM with SANDY GRAVEL LENS	811.36		13 13 17	3.2 P	10.0
DENSE tan DIRTY SANDY GRAVEL	808.86	-5	22 22 23		7.0
VERY STIFF gray/tan SANDY LOAM with GRAVEL	807.36		11 12 10	3.5 P	9.0
STIFF gray/tan SANDY GRAVEL with SANDY LOAM LENS	804.86	-10	10 5 10	1.6 S	15.0
STIFF gray SANDY LOAM with SANDY GRAVEL LENS	802.36		4 6 12	1.2 S	13.0
STIFF gray CLAY LOAM TILL	799.86	-15	6 3 5	1.6 B	18.0
VERY STIFF gray CLAY LOAM TILL	797.36		7 10 12	3.3 B	22.0
STIFF dark gray CLAY LOAM		-20	6		
STIFF dark gray CLAY LOAM *(continued)*	793.86		7 9	1.8 P	25.0
LOOSE light gray DIRTY SANDY GRAVEL	791.36▼		4 4 5		12.0
STIFF tan SANDY LOAM with MEDIUM SAND LENS	789.86	-25	4 6 9	1.1 P	16.0
End of Boring		-30			
		-35			
		-40			

The Unconfined Compressive Strength (UCS) Failure Mode is indicated by (B-Bulge, S-Shear, P-Penetrometer)
The SPT (N value) is the sum of the last two blow values in each sampling zone (AASHTO T206)

BBS, from 137 (Rev. 8-99)

Illinois Department of Transportation
Division of Highways
IDOT

SOIL BORING LOG

Page 1 of 1

Date 8/23/22

ROUTE FAI 39 & FAP 567 DESCRIPTION P92-016-09 - Proposed traffic signals LOGGED BY W. Garza

SECTION 141-1 HBR-3 & (9,10)R-3 LOCATION Dement, SE 1/4 17, NE 1/4 20, SEC. , TWP. 40N, RNG. 2E

COUNTY Ogle DRILLING METHOD Hollow Stem Auger HAMMER TYPE CME-45 Automatic

STRUCT. NO.
Station

Latitude 41° 56' 04.34"
Longitude -89° 01' 37.28"
Northing 1,920,731.5186
Easting 2,606,662.4844

BORING NO. B-2
Station 657+40
Offset
Ground Surface Elev. 818.50 ft

Surface Water Elev. ft
Stream Bed Elev. ft

Groundwater Elev.:
First Encounter None ft
Upon Completion Dry ft
After Hrs. ft

Northing and Easting were calculated using the ILHP-WF coordinate system

Description	Elev.	Depth (ft)	Blows (/6")	UCS Qu (tsf)	Moist (%)
STIFF dark brown LOAM	816.50			1.2 P	
MEDIUM tan SANDY MEDIUM GRAVEL	815.00		9 5 6		14.0
DENSE tan DIRTY SANDY GRAVEL	812.50	-5	20 20 24		
DENSE tan DIRTY SANDY GRAVEL	810.00		14 17 21		
DENSE tan/gray DIRTY SANDY GRAVEL	807.50	-10	11 13 18		9.0
DENSE tan/gray DIRTY SANDY GRAVEL	804.00		8 22 22		
MEDIUM gray SANDY CLAY LOAM with SAND LENS	802.50	-15	4 5 5	0.8 9	17.0
STIFF dark gray CLAY LOAM TILL	799.00		2 6 8	1.6 B	22.0
		-20	40		
VERY DENSE tan BROKEN UP CONCRETE with loam and ASPHALT fill? or old pavement *(continued)*	796.50		53 25		
STIFF dark gray SANDY CLAY LOAM	795.00		3 5 7	1.1 S	13.0
STIFF light gray CLAY LOAM	792.50	-25	1 3 8	1.0 B	29.0
End of Boring		-30			
		-35			
		-40			

The Unconfined Compressive Strength (UCS) Failure Mode is indicated by (B-Bulge, S-Shear, P-Penetrometer)
The SPT (N value) is the sum of the last two blow values in each sampling zone (AASHTO T206)

BBS, from 137 (Rev. 8-99)

MODEL: Soil-Borings_1 [Sheet]
FILE NAME: N:\IDOT\220628\CAD_Sheets\Civil\D264N98-sht-soil-borings.dgn

CHRISTOPHER B. BURKE ENGINEERING, LTD.
9575 W. Higgins Road, Suite 600
Rosemont, Illinois 60018
(847) 823-0500

USER NAME = nhowellIlindgren	DESIGNED -	REVISED -	
	DRAWN -	REVISED -	
	CHECKED -	REVISED -	
PLOT DATE = 2/6/2025	DATE -	REVISED -	

STATE OF ILLINOIS
DEPARTMENT OF TRANSPORTATION

IL 39/I-39 INTERCHANGE IMPROVEMENTS
PROPOSED TRAFFIC SIGNAL SOIL BORINGS

SCALE: SHEET 1 OF 5 SHEETS STA. TO STA.

F.A.* RTE.	SECTION	COUNTY	TOTAL SHEETS	SHEET NO.
*	141-1HBR-3 & (9, 10) R-3	OGLE	508	394
		CONTRACT NO. 64N98		
	ILLINOIS	FED. AID PROJECT		

*FAI ROUTE 39 (I-39) & FAP 567 (IL 38)

Illinois Department of Transportation
Division of Highways
IDOT

SOIL BORING LOG

Page 1 of 1

Date 8/24/22

ROUTE FAI 39 & FAP 567 DESCRIPTION P92-016-09 - Proposed traffic signals LOGGED BY W. Garza

SECTION 141-1 HBR-3 & (9,10)R-3 LOCATION Dement, SE 1/4 17, NE 1/4 20, SEC. , TWP. 40N, RNG. 2E

COUNTY Ogle DRILLING METHOD Hollow Stem Auger HAMMER TYPE CME-45 Automatic

STRUCT. NO.
Station

Latitude 41° 56' 04.35" Northing 1,920,735.2631
Longitude -89° 01' 35.01" Easting 2,606,834.4246

BORING NO. B-3
Station 659+13
Offset
Ground Surface Elev. 819.29 ft

Surface Water Elev. ft
Stream Bed Elev. ft
Groundwater Elev.:
First Encounter 799.8 ft
Upon Completion 795.8 ft
After Hrs. ft

Description	Elev.	DEPTH (ft)	BLOWS (/6")	UCS Qu (tsf)	MOIST (%)
10.0" Concrete 4" BAM	817.79				
VERY DENSE tan DIRTY SANDY GRAVEL	815.79		25 27 32		
VERY DENSE tan DIRTY SANDY GRAVEL	813.29	-5	26 33 43		
VERY DENSE tan DRY DIRTY SANDY GRAVEL	810.79		22 34 41		
DENSE tan SANDY GRAVEL	808.29	-10	17 16 17		
VERY DENSE tan/gray DIRTY SANDY GRAVEL	804.79		23 27 28		
STIFF gray SANDY LOAM TILL	803.29	-15	2 5 6	1.4 B	14.0
STIFF gray CLAY LOAM TILL	799.79 ▼		2 3 7	1.2 B	24.0
		-20	14		
MEDIUM gray BROKEN CONCRETE *(continued)*	797.29		15 10		
MEDIUM tan DIRTY WEATHERED LIMESTONE	794.79		27 13 7		10.0
STIFF dark gray SILTY CLAY LOAM	793.29	-25	3 8 11	1.7 S	24.0
End of Boring		-30, -35, -40			

Northing and Easting were calculated using the ILHP-WF coordinate system

The Unconfined Compressive Strength (UCS) Failure Mode is indicated by (B-Bulge, S-Shear, P-Penetrometer)
The SPT (N value) is the sum of the last two blow values in each sampling zone (AASHTO T206)

BBS, from 137 (Rev. 8-99)

Illinois Department of Transportation
Division of Highways
IDOT

SOIL BORING LOG

Page 1 of 1

Date 8/23/22

ROUTE FAI 39 & FAP 567 DESCRIPTION P92-016-09 - Proposed traffic signals LOGGED BY W. Garza

SECTION 141-1 HBR-3 & (9,10)R-3 LOCATION Dement, SE 1/4 17, NE 1/4 20, SEC. , TWP. 40N, RNG. 2E

COUNTY Ogle DRILLING METHOD Hollow Stem Auger HAMMER TYPE CME-45 Automatic

STRUCT. NO.
Station

Latitude 41° 56' 04.83" Northing 1,920,784.0319
Longitude -89° 01' 34.71" Easting 2,606,856.6352

BORING NO. B-4
Station 659+35
Offset 26.00ft Lt of WBL
Ground Surface Elev. 818.39 ft

Surface Water Elev. ft
Stream Bed Elev. ft
Groundwater Elev.:
First Encounter 806.4 ft
Upon Completion 798.9 ft
After Hrs. ft

Description	Elev.	DEPTH (ft)	BLOWS (/6")	UCS Qu (tsf)	MOIST (%)
MEDIUM dark brown LOAM	816.39			0.5 P	21.0
DENSE tan DIRTY SANDY GRAVEL	814.89		14 15 19		
DENSE tan DIRTY SANDY GRAVEL	812.39	-5	22 19 22		
VERY DENSE tan DIRTY SANDY GRAVEL	809.89		19 25 27		
DENSE tan/gray DIRTY MOIST SANDY GRAVEL	807.39	-10	14 19 27		
DENSE gray SANDY MEDIUM GRAVEL	804.89		16 17 17		
No Recovery	801.39	-15	9 12 8		
VERY STIFF dark gray CLAY LOAM TILL	798.89		2 5 11	3.1 B	26.0
		-20	100		
VERY DENSE light gray OLD CONCRETE PAVEMENT *(continued)*	797.89		for 2"		
End of Boring		-25, -30, -35, -40			

Northing and Easting were calculated using the ILHP-WF coordinate system

The Unconfined Compressive Strength (UCS) Failure Mode is indicated by (B-Bulge, S-Shear, P-Penetrometer)
The SPT (N value) is the sum of the last two blow values in each sampling zone (AASHTO T206)

BBS, from 137 (Rev. 8-99)

MODEL: Soil-Borings_2 [Sheet]
FILE NAME: N:\DOT\220628\CAD_Sheets\Civil\D264N98-sht-soil-borings.dgn

CHRISTOPHER B. BURKE ENGINEERING, LTD.
9575 W. Higgins Road, Suite 600
Rosemont, Illinois 60018
(847) 823-0500

USER NAME = nhowellindgren	DESIGNED -	REVISED -	
	DRAWN -	REVISED -	
	CHECKED -	REVISED -	
PLOT DATE = 2/6/2025	DATE -	REVISED -	

STATE OF ILLINOIS
DEPARTMENT OF TRANSPORTATION

IL 39/I-39 INTERCHANGE IMPROVEMENTS
PROPOSED TRAFFIC SIGNAL SOIL BORINGS

SCALE: SHEET 2 OF 5 SHEETS STA. TO STA.

F.A.* RTE.	SECTION	COUNTY	TOTAL SHEETS	SHEET NO.
*	141-1HBR-3 & (9, 10) R-3	OGLE	508	395
		CONTRACT NO. 64N98		
	ILLINOIS	FED. AID PROJECT		

*FAI ROUTE 39 (I-39) & FAP 567 (IL 38)

Illinois Department of Transportation
Division of Highways
IDOT

SOIL BORING LOG

Page 1 of 1

Date 8/31/22

ROUTE FAI 39 & FAP 567 DESCRIPTION P92-016-09 - Proposed traffic signals LOGGED BY W. Garza

SECTION 141-1 HBR-3 & (9,10)R-3 LOCATION Dement, SE 1/4 17, NE 1/4 20, SEC. , TWP. 40N, RNG. 2E

COUNTY Ogle DRILLING METHOD Hollow Stem Auger HAMMER TYPE CME-45 Automatic

STRUCT. NO.
Station

Latitude 41° 56' 04.12"
Longitude -89° 01' 19.20"
Northing 1,920,727.8657
Easting 2,608,029.4747

BORING NO. B-5
Station 671+05
Offset 24.00ft Rt of EB CL
Ground Surface Elev. 817.58 ft

Surface Water Elev. ft
Stream Bed Elev. ft
Groundwater Elev.:
First Encounter 793.1 ft ▼
Upon Completion 793.1 ft ▽
After Hrs. ft

Description	Elev.	DEPTH (ft)	BLOWS (/6")	UCS Qu (tsf)	MOIST (%)
Shoulder Rock	816.58				
STIFF tan SANDY LOAM	814.08		7 5 6	1.1 P	9.0
STIFF gray SANDY LOAM	811.58	-5	3 3 6	1.5 B	15.0
VERY STIFF gray CLAY LOAM TILL	809.08		1 4 6	2.1 B	24.0
VERY STIFF gray CLAY LOAM TILL	805.58	-10	4 7 9	2.1 B	19.0
DENSE light gray WEATHERED LIMESTONE	803.08		9 23 22		
VERY STIFF gray CLAY LOAM TILL with DIRTY SAND LENS	801.58	-15	4 8 10	2.1 B	18.0
STIFF gray CLAY LOAM TILL with DIRTY SAND LENS	799.08		2 6 6	1.6 P	21.0
		-20	4		
VERY STIFF dark gray SILTY CLAY LOAM *(continued)*	795.58		6 9	2.1 P	32.0
MEDIUM gray SANDY GRAVEL	794.08		4 9 13		12.0
MEDIUM tan DIRTY SANDY GRAVEL	791.58	-25	9 12 15		
End of Boring		-30			
		-35			
		-40			

Northing and Easting were calculated using the ILHP-WF coordinate system

The Unconfined Compressive Strength (UCS) Failure Mode is indicated by (B-Bulge, S-Shear, P-Penetrometer)
The SPT (N value) is the sum of the last two blow values in each sampling zone (AASHTO T206)

BBS, from 137 (Rev. 8-99)

Illinois Department of Transportation
Division of Highways
IDOT

SOIL BORING LOG

Page 1 of 1

Date 8/24/22

ROUTE FAI 39 & FAP 567 DESCRIPTION P92-016-09 - Proposed traffic signals LOGGED BY W. Garza

SECTION 141-1 HBR-3 & (9,10)R-3 LOCATION Dement, SE 1/4 17, NE 1/4 20, SEC. , TWP. 40N, RNG. 2E

COUNTY Ogle DRILLING METHOD Hollow Stem Auger HAMMER TYPE CME-45 Automatic

STRUCT. NO.
Station

Latitude 41° 56' 04.58"
Longitude -89° 01' 19.24"
Northing 1,920,774.4649
Easting 2,608,025.5868

BORING NO. B-6
Station 671+03
Offset
Ground Surface Elev. 818.08 ft

Surface Water Elev. ft
Stream Bed Elev. ft
Groundwater Elev.:
First Encounter 808.6 ft ▼
Upon Completion 804.1 ft ▽
After Hrs. ft

Description	Elev.	DEPTH (ft)	BLOWS (/6")	UCS Qu (tsf)	MOIST (%)
10.5" Concrete 4" BAM	816.58				
MEDIUM tan DIRTY SANDY GRAVEL	813.58		7 5 6		
STIFF gray CLAY LOAM TILL	812.08	-5	2 4 5	1.6 B	17.0
VERY STIFF dark gray CLAY LOAM TILL @ 9' Old Concrete	809.08		2 4 6	2.1 B	23.0
STIFF gray CLAY LOAM TILL	807.08	-10	2 3 4	1.7 B	20.0
VERY STIFF dark gray SILTY CLAY LOAM	804.58		3 5 8	2.0 B	24.0
VERY STIFF light gray CLAY LOAM TILL with WEATHERED LIMESTONE LENS	802.08	-15	11 10 9	2.1 B	17.0
VERY STIFF gray CLAY LOAM TILL	799.58		5 7 11	2.9 B	20.0
		-20	4		
VERY STIFF dark gray SILTY CLAY LOAM *(continued)*	797.08		6 9	2.5 B	32.0
STIFF light gray CLAY LOAM TILL	793.58		2 4 6	1.7 B	23.0
MEDIUM tan MEDIUM SAND	792.08	-25	11 12 15		
End of Boring		-30			
		-35			
		-40			

Northing and Easting were calculated using the ILHP-WF coordinate system

The Unconfined Compressive Strength (UCS) Failure Mode is indicated by (B-Bulge, S-Shear, P-Penetrometer)
The SPT (N value) is the sum of the last two blow values in each sampling zone (AASHTO T206)

BBS, from 137 (Rev. 8-99)

MODEL: Soil-Borings_3 [Sheet]
FILE NAME: N:\IDOT\220628\CAD_Sheets\Civil\D264N98-sht-soil-borings.dgn

CHRISTOPHER B. BURKE ENGINEERING, LTD.
9575 W. Higgins Road, Suite 600
Rosemont, Illinois 60018
(847) 823-0500

USER NAME = nhowelllindgren	DESIGNED -	REVISED -
	DRAWN -	REVISED -
	CHECKED -	REVISED -
PLOT DATE = 2/5/2025	DATE -	REVISED -

STATE OF ILLINOIS
DEPARTMENT OF TRANSPORTATION

IL 39/I-39 INTERCHANGE IMPROVEMENTS
PROPOSED TRAFFIC SIGNAL SOIL BORINGS

SCALE: SHEET 3 OF 5 SHEETS STA. TO STA.

F.A.* RTE.	SECTION	COUNTY	TOTAL SHEETS	SHEET NO.
*	141-1HBR-3 & (9, 10) R-3	OGLE	508	396
		CONTRACT NO. 64N98		
	ILLINOIS	FED. AID PROJECT		

*FAI ROUTE 39 (I-39) & FAP 567 (IL 38)

Illinois Department of Transportation
Division of Highways
IDOT

SOIL BORING LOG

Page 1 of 1

Date 8/31/22

ROUTE FAI 39 & FAP 567 DESCRIPTION P92-016-09 - Proposed traffic signals LOGGED BY W. Garza

SECTION 141-1 HBR-3 & (9,10)R-3 LOCATION Dement, SE 1/4 17, NE 1/4 20, SEC. , TWP. 40N, RNG. 2E

COUNTY Ogle DRILLING METHOD Hollow Stem Auger HAMMER TYPE CME-45 Automatic

STRUCT. NO.
Station

Latitude 41° 56' 05.48"
Longitude -89° 01' 17.14"
Northing 1,920,867.6828
Easting 2,608,182.9968

BORING NO. B-7
Station 672+65
Offset 75.00ft Lt WB
Ground Surface Elev. 815.50 ft

Surface Water Elev. ft
Stream Bed Elev. ft
Groundwater Elev.:
First Encounter 806.0 ft
Upon Completion 791.5 ft
After Hrs. ft

Description	Elev. (ft)	DEPTH (ft)	BLOWS (/6")	UCS Qu (tsf)	MOIST (%)
MEDIUM dark brown SILTY CLAY LOAM	813.50			0.8 P	11.0
STIFF dark gray CLAY LOAM	812.00		2 3 4	1.1 P	31.0
MEDIUM dark gray CLAY LOAM	808.50	-5	1 2 5	0.8 P	30.0
MEDIUM tan MOIST SANDY GRAVEL	807.00		7 10 11		8.0
MEDIUM tan DIRTY SANDY GRAVEL with CLAY LOAM BOTTOM 4"	804.50	-10	7 7 6	0.9 P	24.0
STIFF gray CLAY LOAM TILL	802.00		3 5 6	1.3 P	20.0
STIFF gray CLAY LOAM TILL	799.50	-15	3 4 7	1.9 B	22.0
STIFF gray CLAY LOAM TILL	797.00		3 5 6	1.4 B	27.0
		-20	2		
MEDIUM gray CLAY LOAM TILL with DIRTY SANDY GRAVEL LENS *(continued)*	793.50		4 7	0.5 P	24.0
MEDIUM gray SANDY GRAVEL	791.00		9 13 15		
MEDIUM gray MEDIUM SANDY GRAVEL	789.50	-25	9 12 11		
End of Boring		-40			

Northing and Easting were calculated using the ILHP-WF coordinate system

The Unconfined Compressive Strength (UCS) Failure Mode is indicated by (B-Bulge, S-Shear, P-Penetrometer)
The SPT (N value) is the sum of the last two blow values in each sampling zone (AASHTO T206)

BBS, from 137 (Rev. 8-99)

Illinois Department of Transportation
Division of Highways
IDOT

SOIL BORING LOG

Page 1 of 1

Date 8/31/22

ROUTE FAI 39 & FAP 567 DESCRIPTION P92-016-09 - Proposed traffic signals LOGGED BY W. Garza

SECTION 141-1 HBR-3 & (9,10)R-3 LOCATION Dement, SE 1/4 17, NE 1/4 20, SEC. , TWP. 40N, RNG. 2E

COUNTY Ogle DRILLING METHOD Hollow Stem Auger HAMMER TYPE CME-45 Automatic

STRUCT. NO.
Station

Latitude 41° 56' 04.60"
Longitude -89° 01' 16.65"
Northing 1,920,778.5393
Easting 2,608,221.4705

BORING NO. B-8
Station 672+95
Offset
Ground Surface Elev. 815.35 ft

Surface Water Elev. ft
Stream Bed Elev. ft
Groundwater Elev.:
First Encounter 795.4 ft
Upon Completion 791.9 ft
After Hrs. ft

Description	Elev. (ft)	DEPTH (ft)	BLOWS (/6")	UCS Qu (tsf)	MOIST (%)
8" Concrete	814.35				
MEDIUM tan MEDIUM SAND	811.85		9 11 17		
MEDIUM tan DIRTY SAND with CLAY LOAM LENS	808.35	-5	6 4 7	1.1 P	18.0
VERY STIFF dark gray CLAY LOAM TILL	805.85		3 7 9	3.3 B	18.0
MEDIUM gray SANDY GRAVEL	804.35	-10	21 21 8		
DENSE gray DIRTY SANDY GRAVEL	800.85		8 11 20		11.0
STIFF dark gray CLAY LOAM TILL	799.35	-15	2 4 7	1.5 B	25.0
STIFF gray CLAY LOAM TILL	796.85		2 5 6	1.5 B	30.0
		-20	0		
MEDIUM gray SILTY CLAY LOAM *(continued)*	793.35		2 3	0.6 B	29.0
MEDIUM gray CLEAN MEDIUM COARSE SAND	791.85		5 10 17		
MEDIUM gray SANDY GRAVEL	789.35	-25	11 15 14		
End of Boring		-40			

Northing and Easting were calculated using the ILHP-WF coordinate system

The Unconfined Compressive Strength (UCS) Failure Mode is indicated by (B-Bulge, S-Shear, P-Penetrometer)
The SPT (N value) is the sum of the last two blow values in each sampling zone (AASHTO T206)

BBS, from 137 (Rev. 8-99)

MODEL: Soil-Borings_4 [Sheet]
FILE NAME: N:\DOT\220628\CAD_Sheets\Civil\D264N98-sht-soil-borings.dgn

CHRISTOPHER B. BURKE ENGINEERING, LTD.
9575 W. Higgins Road, Suite 600
Rosemont, Illinois 60018
(847) 823-0500

USER NAME = nhowellindgren	DESIGNED -	REVISED -	
	DRAWN -	REVISED -	
	CHECKED -	REVISED -	
PLOT DATE = 2/6/2025	DATE -	REVISED -	

STATE OF ILLINOIS
DEPARTMENT OF TRANSPORTATION

IL 39/I-39 INTERCHANGE IMPROVEMENTS
PROPOSED TRAFFIC SIGNAL SOIL BORINGS

SCALE: SHEET 4 OF 5 SHEETS STA. TO STA.

F.A.* RTE.	SECTION	COUNTY	TOTAL SHEETS	SHEET NO.
*	141-1HBR-3 & (9, 10) R-3	OGLE	508	397
		CONTRACT NO. 64N98		
	ILLINOIS	FED. AID PROJECT		

*FAI ROUTE 39 (I-39) & FAP 567 (IL 38)

Illinois Department of Transportation
Division of Highways
IDOT

SOIL BORING LOG

Page 1 of 1

Date 9/6/22

ROUTE FAI 39 & FAP 567 DESCRIPTION P92-016-09 - Proposed traffic signals LOGGED BY N. White

SECTION 141-1 HBR-3 & (9,10)R-3 LOCATION Dement, SE 1/4 17, NE 1/4 20, SEC. , TWP. 40N, RNG. 2E

COUNTY Ogle DRILLING METHOD Hollow Stem Auger HAMMER TYPE CME-45 Automatic

STRUCT. NO.
Station

Latitude 41° 56' 04.09"
Longitude -89° 01' 15.94"

Northing 1,920,728.2401
Easting 2,608,275.7537

BORING NO. B-9
Station 673+50
Offset 24.00ft Rt EB
Ground Surface Elev. 814.83 ft

Surface Water Elev. ft
Stream Bed Elev. ft

Groundwater Elev.:
First Encounter 792.8 ft ▼
Upon Completion 790.3 ft ▽
After Hrs. ft

Description	Elev.	DEPTH (ft)	BLOWS (/6")	UCS Qu (tsf)	MOIST (%)
STIFF black SILTY CLAY LOAM	812.83			1.0 P	27.0
MEDIUM MEDIUM-COARSE brown DIRTY SAND AND GRAVEL	810.33		7 8 11		
MEDIUM brown and gray SILTY CLAY LOAM	808.83	-5	3 4 6	0.5 B	21.0
VERY STIFF black and gray CLAY LOAM	806.33		3 6 7	2.0 B	22.0
VERY STIFF black CLAY LOAM	803.83	-10	6 11 12	2.6 B	26.0
VERY STIFF black and gray CLAY LOAM with SAND LENS	801.33		5 7 10	3.5 P	28.0
STIFF gray CLAY LOAM	798.83	-15	4 5 8	1.8 B	32.0
SOFT gray SILTY LOAM TILL with ORGANICS	795.33		1 3 3	0.3 B	22.0
		-20	6		
MEDIUM MEDIUM-COARSE gray SAND (moist) *(continued)*	793.83		11 15		
MEDIUM MEDIUM-COARSE gray SAND	791.33		8 11 12		
MEDIUM COARSE gray SAND	788.83	-25	7 9 14		
End of Boring		-30			
		-35			
		-40			

Northing and Easting were calculated using the ILHP-WF coordinate system

The Unconfined Compressive Strength (UCS) Failure Mode is indicated by (B-Bulge, S-Shear, P-Penetrometer)
The SPT (N value) is the sum of the last two blow values in each sampling zone (AASHTO T206)

BBS, from 137 (Rev. 8-99)

MODEL: Soil-Borings_5 [Sheet]
FILE NAME: N:\IDOT\220628\CAD_Sheets\Civil\D284N98-sht-soil-borings.dgn

CHRISTOPHER B. BURKE ENGINEERING, LTD.
9575 W. Higgins Road, Suite 600
Rosemont, Illinois 60018
(847) 823-0500

USER NAME = nhowelllindgren	DESIGNED -	REVISED -	
	DRAWN -	REVISED -	
	CHECKED -	REVISED -	
PLOT DATE = 2/6/2025	DATE -	REVISED -	

STATE OF ILLINOIS
DEPARTMENT OF TRANSPORTATION

IL 39/I-39 INTERCHANGE IMPROVEMENTS
PROPOSED TRAFFIC SIGNAL SOIL BORINGS

SCALE: SHEET 5 OF 5 SHEETS STA. TO STA.

F.A.* RTE.	SECTION	COUNTY	TOTAL SHEETS	SHEET NO.
*	141-1HBR-3 & (9, 10) R-3	OGLE	508	398
		CONTRACT NO. 64N98		
	ILLINOIS	FED. AID PROJECT		

*FAI ROUTE 39 (I-39) & FAP 567 (IL 38)

LIGHTING GENERAL NOTES

1. THE EXACT LOCATIONS OF ALL UTILITIES SHALL BE VERIFIED BY THE CONTRACTOR BEFORE THE INSTALLATION OF ANY EQUIPMENT. FOR THE LOCATIONS OF THE UTILITIES, CALL JULIE AT (800) 892-0123.
2. BEFORE INSTALLING LIGHT STANDARDS NEAR OVERHEAD AND UNDERGROUND ELECTRIC UTILITIES SHALL CALL ROCHELLE MUNICIPAL UTILITIES FOR LOCATION APPROVAL AND MINIMUM CLEARANCE REQUIREMENTS.
3. THE CONTRACTOR SHALL BE SOLELY RESPONSIBLE FOR JOB SITE SAFETY AS WELL AS SUPERVISION/ DIRECTION AND MEANS/METHODS OF CONSTRUCTION.
4. ALL WORK SHALL BE IN ACCORDANCE WITH THE LATEST EDITION OF THE FOLLOWING SPECIFICATIONS, WHICH ARE HEREBY MADE A PART HEREOF:
   - A. "STANDARD SPECIFICATIONS FOR ROAD AND BRIDGE CONSTRUCTION", AS PREPARED BY IDOT.
   - B. "SUPPLEMENTAL SPECIFICATIONS AND RECURRING SPECIAL PROVISIONS", AS PREPARED BY IDOT.
   - C. "THE NATIONAL ELECTRICAL CODE".
   - D. MUNICIPAL CODES & STANDARDS.
5. THE CONTRACTOR SHALL BE RESPONSIBLE FOR THE ESTABLISHMENT OF THE TOP OF FOUNDATION ELEVATION WITH THE FINISHED GRADE.
6. THE CONTRACTOR SHALL BE RESPONSIBLE FOR TIMELY NOTIFICATION AND ALL COORDINATION WITH ROCHELLE MUNICIPAL UTILITIES FOR NEW ELECTRIC SERVICE TO THE PROPOSED LIGHTING CONTROLLER.
7. THE LIGHT POLE LOCATIONS SHALL COMPLY WITH THE MINIMUM CLEAR WIDTH FOR ADA REQUIREMENTS FOR CLEAR WIDTH OF SIDEWALK, AND SHALL COMPLY WITH BDE CHAPTER 17-4.04 AND PROWAG R301.3.1.
8. THE CONTRACTOR SHALL USE A STANDARD FOUNDATION WHENEVER POSSIBLE. WHEN UTILITY CONFLICT PROHIBITS USE OF STANDARD FOUNDATION THE CONTRACTOR MAY USE AN OFFSET FOUNDATION AT THE DIRECTION OF THE ENGINEER.
9. CONCRETE FOUNDATIONS SHALL BE 24" DIAMETER FOR THE CITY OF ROCHELLE'S DECORATIVE LIGHT POLES AND SHALL BE 30" DIAMETER FOR IDOT'S LIGHT POLES.

ABBREVIATIONS

A	AMPS	HH	HAND HOLE
BOC	BACK OF CURB	HPS	HIGH PRESSURE SODIUM
CKT	CIRCUIT	PVC	POLYVINYL CHLORIDE
DIA	DIAMETER	RGS	RIGID GALVANIZED STEEL
EIS	EMBEDDED IN STRUCTURE	ROW	RIGHT OF WAY
FT	FOOT	STA	STATION
FOC	FACE OF CURB	V	VOLTS
GND	GROUND	W	WATTS
HD	HEAVY DUTY		
HDPE	HIGH DENSITY POLYETHYLENE		

CAUTION
NOTICE TO CONTRACTOR

THE CONTRACTOR IS SPECIFICALLY CAUTIONED THE LOCATION AND/OR ELEVATION OF EXISTING AND PROPOSED UTILITIES AS SHOWN ON THESE PLANS. THE INFORMATION IS NOT TO BE RELIED ON AS BEING EXACT OR COMPLETE. THE CONTRACTOR MUST CALL THE LOCAL UTILITY LOCATION CENTER AT LEAST 72 HOURS BEFORE ANY EXCAVATION TO REQUEST EXACT FIELD LOCATIONS OF THE UTILITIES. IT SHALL BE THE RESPONSIBILITY OF THE CONTRACTOR TO INFORM ENGINEER OF ANY EXISTING UTILITIES WHICH CONFLICT WITH THE PROPOSED IMPROVEMENTS.

THE CITY OF ROCHELLE WILL OWN AND MAINTAIN THE PROPOSED COMBINATION LIGHTING AT IL-38 & DEMENT RD AND DECORATIVE ROADWAY LIGHTING ALONG IL-38.

IDOT WILL OWN AND MAINTAIN ALL OTHER PROPOSED LIGHTING.

LIGHTING BILL OF MATERIALS

DESCRIPTION	UNIT	QUANTITY
TRENCH BACKFILL	CU YD	20
ELECTRIC SERVICE INSTALLATION	EACH	3
UNDERGROUND CONDUIT, GALVANIZED STEEL, 2" DIA.	FOOT	165
UNDERGROUND CONDUIT, GALVANIZED STEEL, 2 1/2" DIA.	FOOT	330
UNDERGROUND CONDUIT, GALVANIZED STEEL, 3" DIA.	FOOT	485
UNDERGROUND CONDUIT, GALVANIZED STEEL, 5" DIA.	FOOT	165
UNDERGROUND CONDUIT, COILABLE NONMETALLIC CONDUIT, 1 1/4" DIA.	FOOT	8965
UNDERGROUND CONDUIT, COILABLE NONMETALLIC CONDUIT, 1 1/2" DIA.	FOOT	8380
UNDERGROUND CONDUIT, COILABLE NONMETALLIC CONDUIT, 2" DIA.	FOOT	40
CONDUIT EMBEDDED IN STRUCTURE, 2" DIA., PVC	FOOT	900
JUNCTION BOX, STAINLESS STEEL, ATTACHED TO STRUCTURE, 12" X 12" X 6"	EACH	8
HANDHOLE	EACH	16
ELECTRIC CABLE IN CONDUIT, 600V (XLP-TYPE USE) 1/C NO. 10	FOOT	3175
ELECTRIC CABLE IN CONDUIT, 600V (XLP-TYPE USE) 1/C NO. 6	FOOT	115125
ELECTRIC CABLE IN CONDUIT, 600V (XLP-TYPE USE) 1/C NO. 2	FOOT	780
LUMINAIRE, LED, ROADWAY, OUTPUT DESIGNATION G	EACH	8
LUMINAIRE, LED, ROADWAY, OUTPUT DESIGNATION H	EACH	54
LIGHTING CONTROLLER, PEDESTAL MOUNTED, 240VOLT, 100AMP	EACH	2
LIGHTING CONTROLLER, BASE MOUNTED, 240VOLT, 100AMP	EACH	1
LIGHT POLE, ALUMINUM, 40 FT. M.H., 15 FT. MAST ARM	EACH	41
LIGHT POLE FOUNDATION, 24" DIAMETER	FOOT	215
LIGHT POLE FOUNDATION, 30" DIAMETER	FOOT	222
BREAKAWAY DEVICE, TRANSFORMER BASE, 15 INCH BOLT CIRCLE	EACH	37
REMOVAL OF LIGHTING UNIT, SALVAGE	EACH	2
REMOVAL OF LIGHTING TOWER, SALVAGE	EACH	2
REMOVAL OF POLE FOUNDATION	EACH	4
REMOVAL OF ELECTRIC SERVICE INSTALLATION	EACH	1
REMOVAL OF LIGHTING CONTROLLER FOUNDATION	EACH	1
REMOVE EXISTING CABLE	FOOT	5270
REMOVE CONDUIT ATTACHED TO STRUCTURE	FOOT	255
REMOVE EXISTING JUNCTION BOX	EACH	2
COMBINATION LIGHTING CONTROLLER	EACH	2
LIGHTING UNIT COMPLETE (SPECIAL)	EACH	43
TEMPORARY LIGHTING SYSTEM	L SUM	1
REMOVE TEMPORARY LIGHTING SYSTEM	L SUM	1
REMOVE EXISTING LIGHTING CONTROLLER AND SALVAGE	EACH	1
MAINTENANCE OF LIGHTING SYSTEM	CAL MO	12

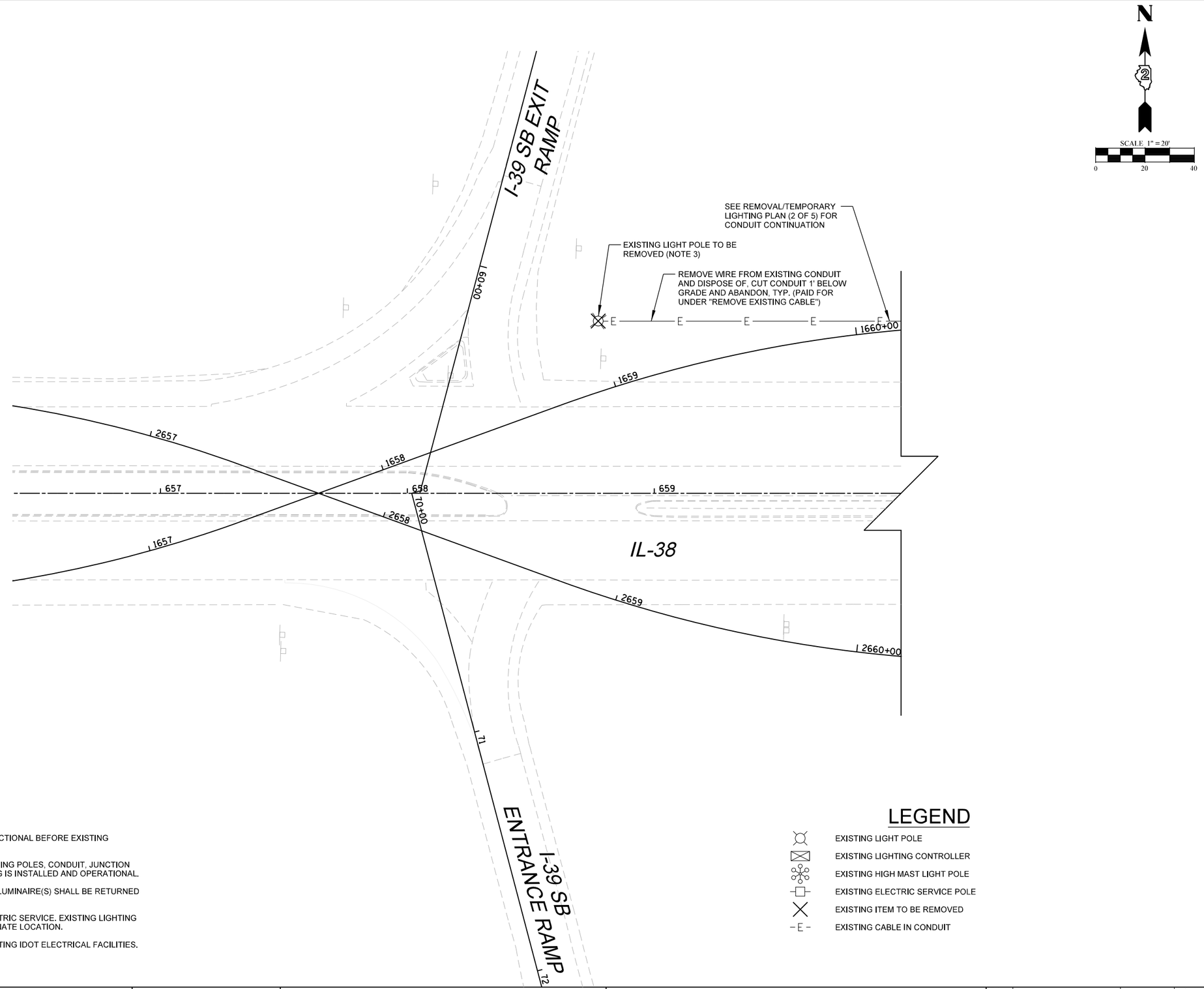

NOTES:

1. TEMPORARY COMBINATION LIGHTING SHALL BE INSTALLED AND FUNCTIONAL BEFORE EXISTING INTERSECTION LIGHTING IS REMOVED.
2. EXISTING ITEMS PERTAINING TO HIGH MAST RAMP LIGHTING (INCLUDING POLES, CONDUIT, JUNCTION BOXES, ECT.) SHALL BE REMOVED AFTER PROPOSED RAMP LIGHTING IS INSTALLED AND OPERATIONAL.
3. REMOVE EXISTING LIGHT POLE/FOUNDATION. EXISTING LIGHT POLE LUMINAIRE(S) SHALL BE RETURNED TO IDOT, CONTRACTOR TO COORDINATE LOCATION.
4. REMOVE EXISTING LIGHTING CONTROLLER, FOUNDATION, AND ELECTRIC SERVICE. EXISTING LIGHTING CONTROLLER TO BE RETURNED TO IDOT, CONTRACTOR TO COORDINATE LOCATION.
5. THE CONTRACTOR SHALL BE RESPONSIBLE FOR LOCATING ALL EXISTING IDOT ELECTRICAL FACILITIES.

LEGEND

- EXISTING LIGHT POLE
- EXISTING LIGHTING CONTROLLER
- EXISTING HIGH MAST LIGHT POLE
- EXISTING ELECTRIC SERVICE POLE
- EXISTING ITEM TO BE REMOVED
- –E– EXISTING CABLE IN CONDUIT

MODEL: Default
FILE NAME: N:\IDOT\220628\CAD_Sheets\Elec\ILREM_D284N98_01.dgn

CHRISTOPHER B. BURKE ENGINEERING, LTD.
9575 W. Higgins Road, Suite 600
Rosemont, Illinois 60018
(847) 823-0500

USER NAME = nhowell@indgren	DESIGNED - AJD/RJJ	REVISED -	
	DRAWN - RMS/RJJ	REVISED -	
PLOT SCALE = 1:40	CHECKED - AJD	REVISED -	
PLOT DATE = 2/6/2025	DATE -	REVISED -	

STATE OF ILLINOIS
DEPARTMENT OF TRANSPORTATION

IL 38 RECONSTRUCTION ROADWAY LIGHTING
REMOVAL/TEMPORARY PLAN (1 OF 5)

SCALE: 1:40 | SHEET 1 OF 5 SHEETS | STA. TO STA.

F.A. RTE.	SECTION	COUNTY	TOTAL SHEETS	SHEET NO.
567	141-1HBR-3 & (9,10) R-3	OGLE	508	400
		CONTRACT NO. 64N98		
		ILLINOIS	FED. AID PROJECT	