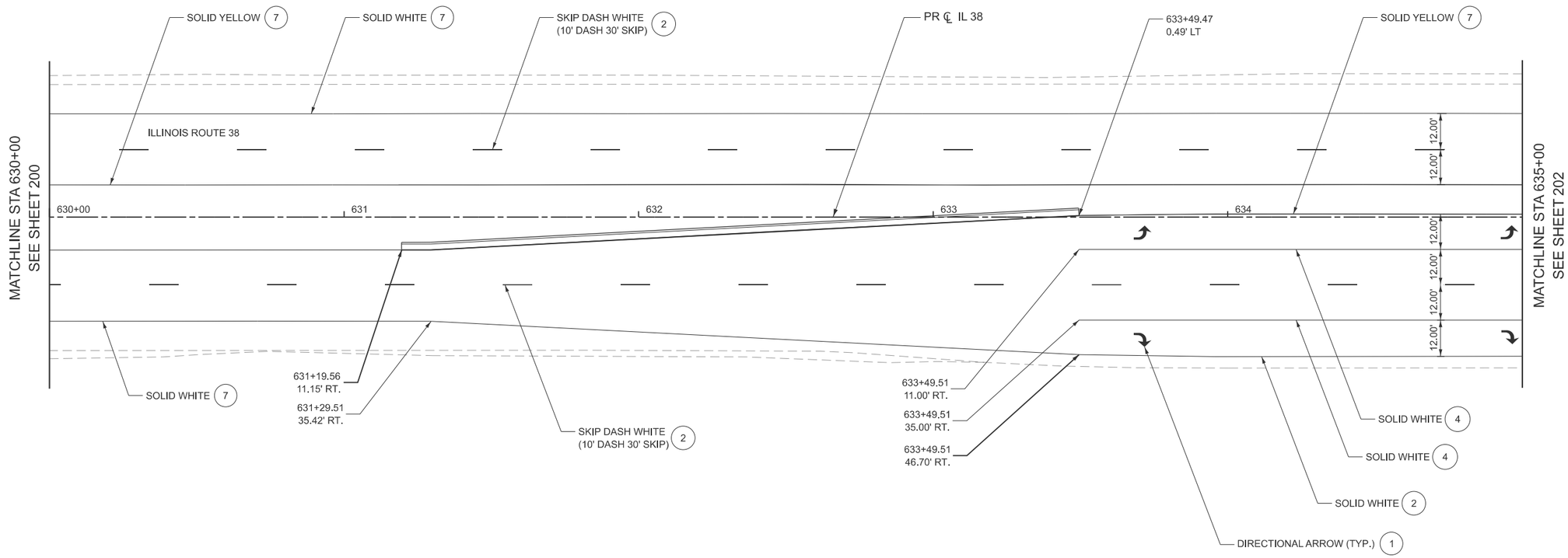

0 20 40
SCALE IN FEET

N

NOTES:

1. THE CONTRACTOR SHALL NOTIFY TRAFFIC OPERATIONS A MINIMUM OF 5 WORKING DAYS PRIOR TO PLACING PERMANENT PAVEMENT MARKINGS.

LEGEND

1. MOD URETH LTR & SYM WITH GRV RCSD PVT MRKG
2. PREF PL PM TD LN 7" WITH CONTRAST WITH GRV RCSD PVT MRKG 8"
3. PREF PL PM TD L 9" WITH CONTRAST WITH GRV RCSD PVT MRKG 10"
4. PREF PL PM TD L 11" WITH CONTRAST WITH GRV RCSD PVT MRKG 12"
5. PREF PL PM TD L 12" WITH GRV RCSD PVT MRKG 13"
6. PREF PL PM TD L 24" WITH GRV RCSD PVT MRKG 25"
7. MOD URETH PM LINE 4" WITH GRV RCSD PVT MRKG 5"
8. MOD URETH PM LINE 8" WITH GRV RCSD PVT MRKG 9"
9. MOD URETH PM LINE 12" WITH GRV RCSD PVT MRKG 13"

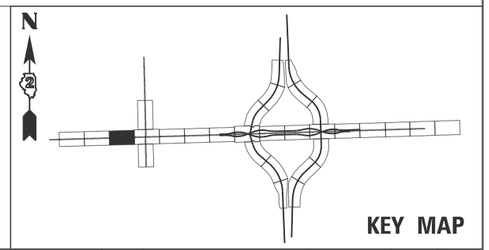

KEY MAP

MODEL: SHT_PLAN
FILE NAME: C:\Bentley\CONNECT10111\Organization-Civil\IDOT_Standards\Cell\IDOT_Sheets.cel

HBM ENGINEERING GROUP, LLC

USER NAME =	DESIGNED - KAO	REVISED -	
	DRAWN - KAO	REVISED -	
	CHECKED - AMI	REVISED -	
PLOT DATE = 2/6/2025	DATE - 2/6/2025	REVISED -	

STATE OF ILLINOIS
DEPARTMENT OF TRANSPORTATION

PROPOSED PAVEMENT MARKING PLAN
IL 38

SCALE: | SHEET 3 OF 30 SHEETS | STA. 630+00 TO STA. 635+00

F.A.* RTE.	SECTION	COUNTY	TOTAL SHEETS	SHEET NO.
*	141-1HBR-3 & (9,10) R-3	OGLE	508	201

CONTRACT NO. 64N98

ILLINOIS | FED. AID PROJECT

*FAI ROUTE 39 (I-39) & FAP 567 (IL 38)

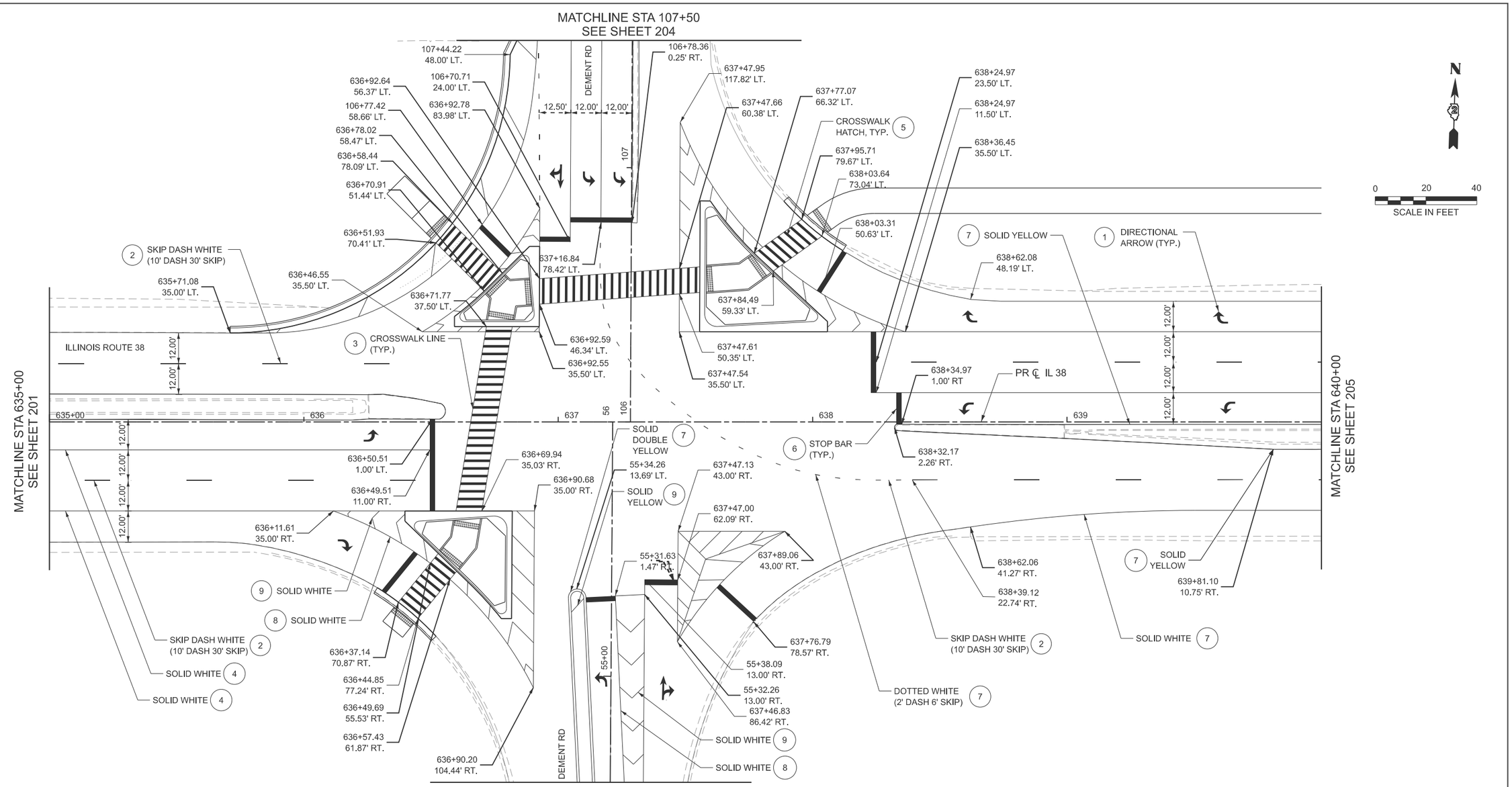

NOTES:

1. THE CONTRACTOR SHALL NOTIFY TRAFFIC OPERATIONS A MINIMUM OF 5 WORKING DAYS PRIOR TO PLACING PERMANENT PAVEMENT MARKINGS.

LEGEND

1. MOD URETH LTR & SYM WITH GRV RCSD PVT MRKG
2. PREF PL PM TD LN 7" WITH CONTRAST WITH GRV RCSD PVT MRKG 8"
3. PREF PL PM TD L 9" WITH CONTRAST WITH GRV RCSD PVT MRKG 10"
4. PREF PL PM TD L 11" WITH CONTRAST WITH GRV RCSD PVT MRKG 12"
5. PREF PL PM TD L 12" WITH GRV RCSD PVT MRKG 13"
6. PREF PL PM TD L 24" WITH GRV RCSD PVT MRKG 25"
7. MOD URETH PM LINE 4" WITH GRV RCSD PVT MRKG 5"
8. MOD URETH PM LINE 8" WITH GRV RCSD PVT MRKG 9"
9. MOD URETH PM LINE 12" WITH GRV RCSD PVT MRKG 13"

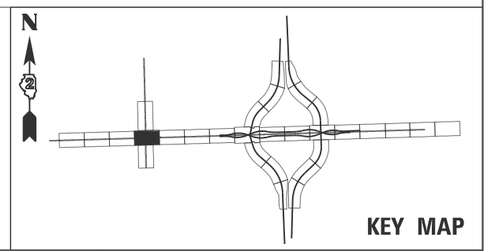

MODEL: SHT_PLAN
FILE NAME: C:\Bentley\CONNECT10111\Organization-Civil\IDOT_Standards\Civil\IDOT_Sheets.cet

HBM ENGINEERING GROUP, LLC

USER NAME =	DESIGNED - KAO	REVISED -	
	DRAWN - KAO	REVISED -	
	CHECKED - AMI	REVISED -	
PLOT DATE = 2/6/2025	DATE - 2/6/2025	REVISED -	

STATE OF ILLINOIS
DEPARTMENT OF TRANSPORTATION

PROPOSED PAVEMENT MARKING PLAN
IL 38 AND DEMENT ROAD INTERSECTION

SCALE: | SHEET 4 OF 30 SHEETS | STA. 635+00 TO STA. 640+00

F.A.* RTE.	SECTION	COUNTY	TOTAL SHEETS	SHEET NO.
*	141-1HBR-3 & (9,10) R-3	OGLE	508	202
		CONTRACT NO. 64N98		
	ILLINOIS	FED. AID PROJECT		

*FAI ROUTE 39 (I-39) & FAP 567 (IL 38)

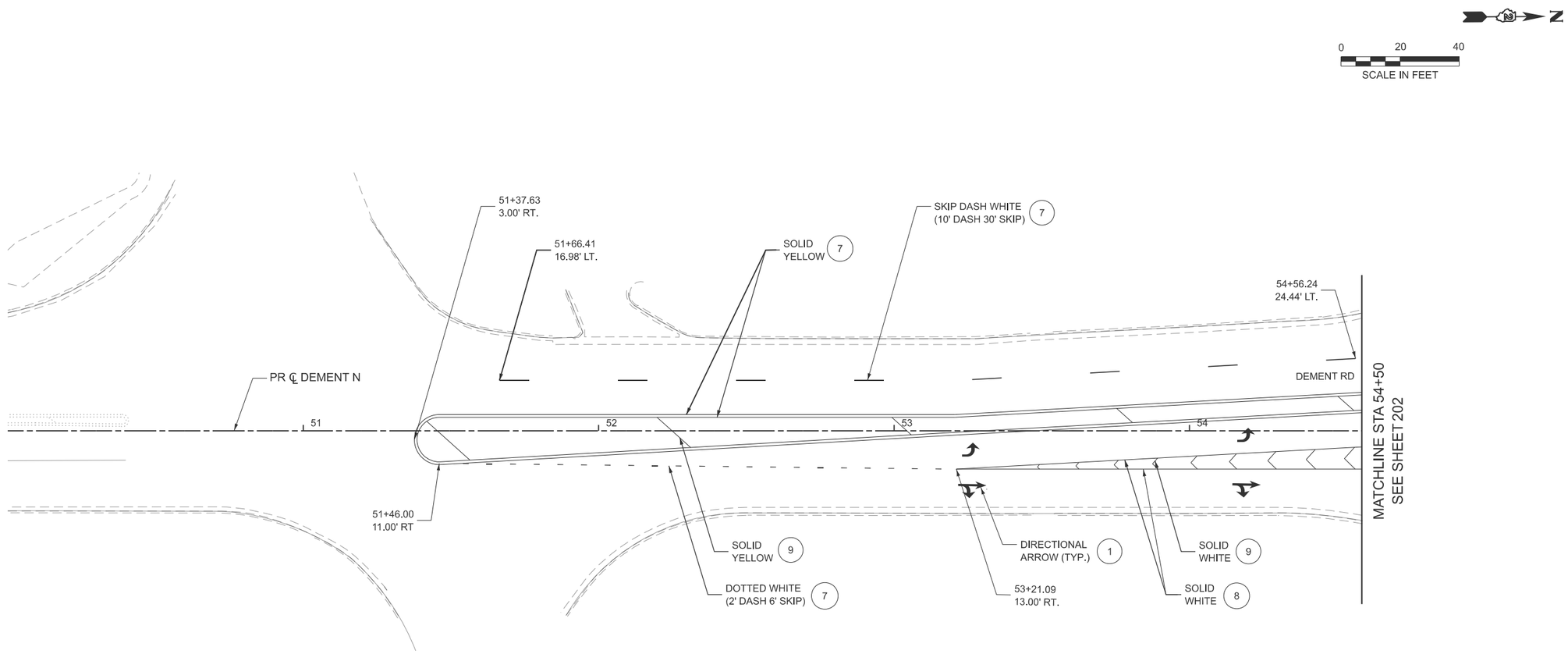

NOTES:

1. THE CONTRACTOR SHALL NOTIFY TRAFFIC OPERATIONS A MINIMUM OF 5 WORKING DAYS PRIOR TO PLACING PERMANENT PAVEMENT MARKINGS.

LEGEND

1. MOD URETH LTR & SYM WITH GRV RCSD PVT MRKG
2. PREF PL PM TD LN 7" WITH CONTRAST WITH GRV RCSD PVT MRKG 8"
3. PREF PL PM TD L 9" WITH CONTRAST WITH GRV RCSD PVT MRKG 10"
4. PREF PL PM TD L 11" WITH CONTRAST WITH GRV RCSD PVT MRKG 12"
5. PREF PL PM TD L 12" WITH GRV RCSD PVT MRKG 13"
6. PREF PL PM TD L 24" WITH GRV RCSD PVT MRKG 25"
7. MOD URETH PM LINE 4" WITH GRV RCSD PVT MRKG 5"
8. MOD URETH PM LINE 8" WITH GRV RCSD PVT MRKG 9"
9. MOD URETH PM LINE 12" WITH GRV RCSD PVT MRKG 13"

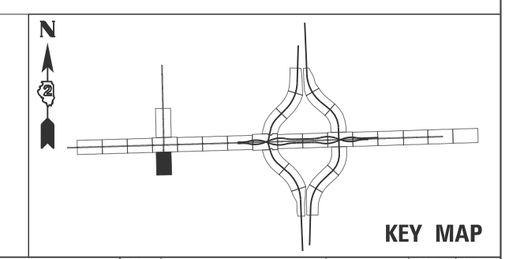

KEY MAP

MODEL: SHT_PLAN
FILE NAME: C:\Bentley\CONNECT10.11\Organization-Civil\IDOT_Standards\Civil\IDOT_Sheets.cel

HBM ENGINEERING GROUP, LLC

USER NAME =	DESIGNED - KAO	REVISED -	
	DRAWN - KAO	REVISED -	
	CHECKED - AMI	REVISED -	
PLOT DATE = 2/6/2025	DATE - 2/6/2025	REVISED -	

STATE OF ILLINOIS
DEPARTMENT OF TRANSPORTATION

PROPOSED PAVEMENT MARKING PLAN
DEMENT ROAD

SCALE: | SHEET 5 OF 30 SHEETS | STA. 50+00 TO STA. 54+50

F.A.* RTE.	SECTION	COUNTY	TOTAL SHEETS	SHEET NO.
*	141-1HBR-3 & (9,10) R-3	OGLE	508	203

CONTRACT NO. 64N98

ILLINOIS | FED. AID PROJECT

*FAI ROUTE 39 (I-39) & FAP 567 (IL 38)

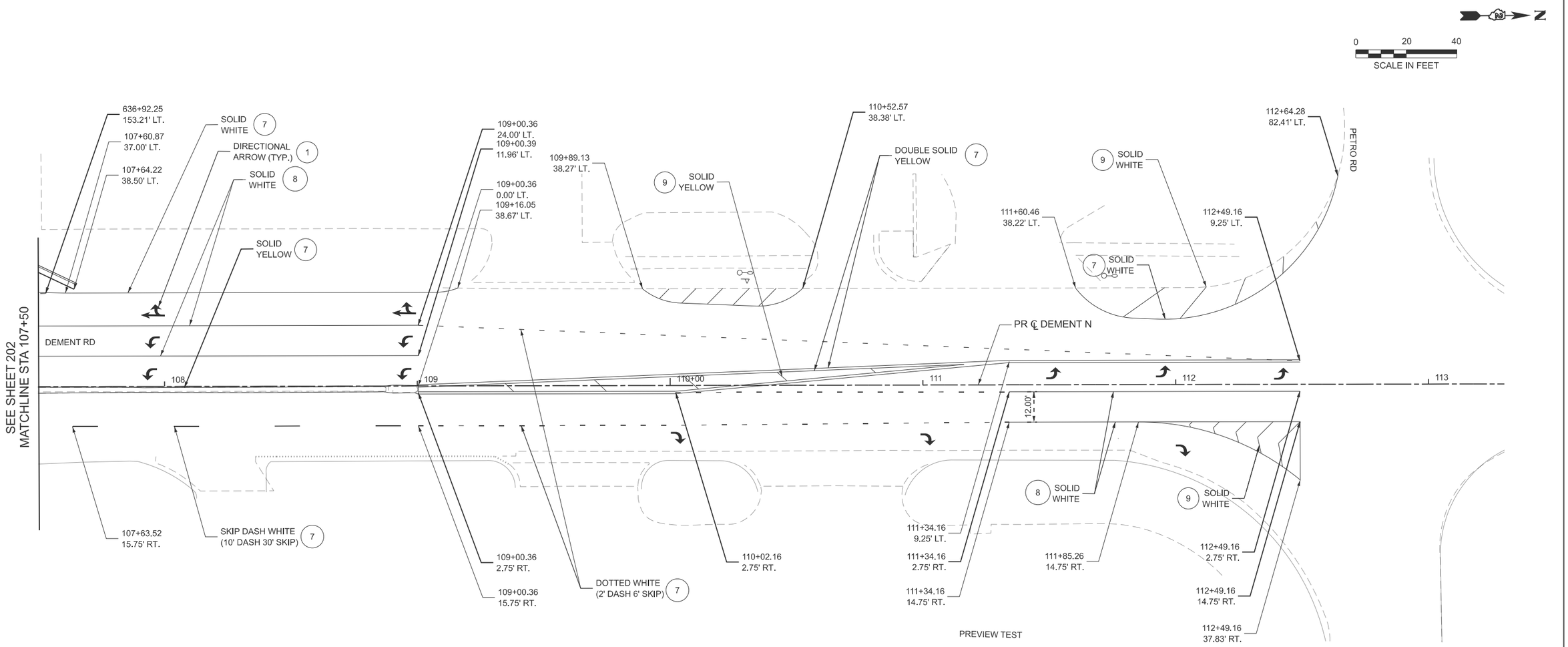

NOTES:

1. THE CONTRACTOR SHALL NOTIFY TRAFFIC OPERATIONS A MINIMUM OF 5 WORKING DAYS PRIOR TO PLACING PERMANENT PAVEMENT MARKINGS.

LEGEND

1. MOD URETH LTR & SYM WITH GRV RCSD PVT MRKG
2. PREF PL PM TD LN 7" WITH CONTRAST WITH GRV RCSD PVT MRKG 8"
3. PREF PL PM TD L 9" WITH CONTRAST WITH GRV RCSD PVT MRKG 10"
4. PREF PL PM TD L 11" WITH CONTRAST WITH GRV RCSD PVT MRKG 12"
5. PREF PL PM TD L 12" WITH GRV RCSD PVT MRKG 13"
6. PREF PL PM TD L 24" WITH GRV RCSD PVT MRKG 25"
7. MOD URETH PM LINE 4" WITH GRV RCSD PVT MRKG 5"
8. MOD URETH PM LINE 8" WITH GRV RCSD PVT MRKG 9"
9. MOD URETH PM LINE 12" WITH GRV RCSD PVT MRKG 13"

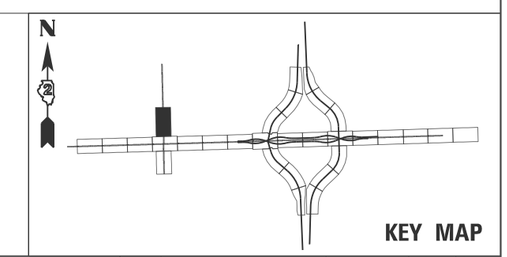

MODEL: SHT_PLAN
FILE NAME: C:\Bentley\CONNECT10\11\Organization-Civil\IDOT_Standards\Cell\IDOT_Sheets.cel

HBM ENGINEERING GROUP, LLC

USER NAME =	DESIGNED - KAO	REVISED -	
	DRAWN - KAO	REVISED -	
	CHECKED - AMI	REVISED -	
PLOT DATE = 2/6/2025	DATE - 2/6/2025	REVISED -	

STATE OF ILLINOIS
DEPARTMENT OF TRANSPORTATION

PROPOSED PAVEMENT MARKING PLAN
DEMENT ROAD

SCALE: | SHEET 6 OF 30 SHEETS | STA. 107+50 TO STA.

F.A.* RTE.	SECTION	COUNTY	TOTAL SHEETS	SHEET NO.
*	141-1HBR-3 & (9,10) R-3	OGLE	508	204
		CONTRACT NO. 64N98		
		ILLINOIS	FED. AID PROJECT	

*FAI ROUTE 39 (I-39) & FAP 567 (IL 38)

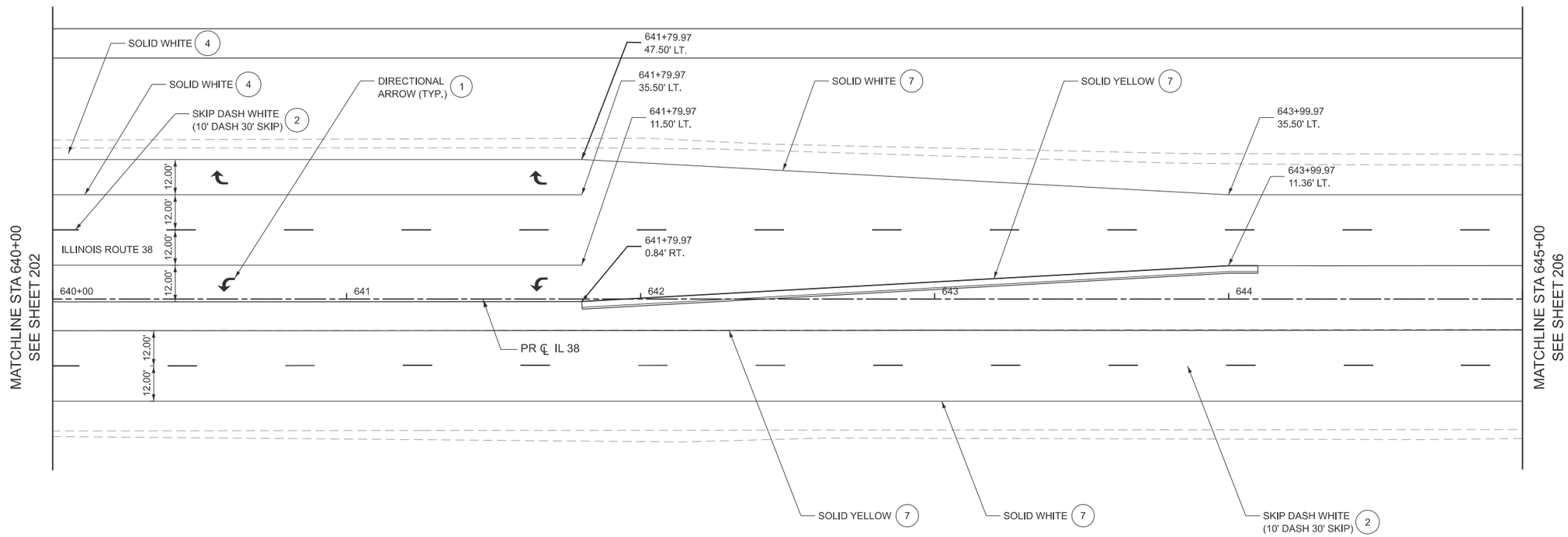

NOTES:

1. THE CONTRACTOR SHALL NOTIFY TRAFFIC OPERATIONS A MINIMUM OF 5 WORKING DAYS PRIOR TO PLACING PERMANENT PAVEMENT MARKINGS.

LEGEND

1. MOD URETH LTR & SYM WITH GRV RCSD PVT MRKG
2. PREF PL PM TD LN 7" WITH CONTRAST WITH GRV RCSD PVT MRKG 8"
3. PREF PL PM TD L 9" WITH CONTRAST WITH GRV RCSD PVT MRKG 10"
4. PREF PL PM TD L 11" WITH CONTRAST WITH GRV RCSD PVT MRKG 12"
5. PREF PL PM TD L 12" WITH GRV RCSD PVT MRKG 13"
6. PREF PL PM TD L 24" WITH GRV RCSD PVT MRKG 25"
7. MOD URETH PM LINE 4" WITH GRV RCSD PVT MRKG 5"
8. MOD URETH PM LINE 8" WITH GRV RCSD PVT MRKG 9"
9. MOD URETH PM LINE 12" WITH GRV RCSD PVT MRKG 13"

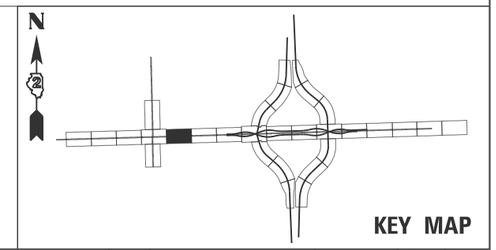

KEY MAP

MODEL: SHT_PLAN
FILE NAME: C:\Bentley\CONNECT10111\Organization-Civil\IDOT_Standards\Cell\IDOT_Sheets.cel

HBM ENGINEERING GROUP, LLC

USER NAME =	DESIGNED - KAO	REVISED -	
	DRAWN - KAO	REVISED -	
	CHECKED - AMI	REVISED -	
PLOT DATE = 2/6/2025	DATE - 2/6/2025	REVISED -	

STATE OF ILLINOIS
DEPARTMENT OF TRANSPORTATION

PROPOSED PAVEMENT MARKING PLAN
IL 38 AND DEMENT ROAD INTERSECTION

SCALE: | SHEET 7 OF 30 SHEETS | STA. 640+00 TO STA. 645+00

F.A.* RTE.	SECTION	COUNTY	TOTAL SHEETS	SHEET NO.
*	141-1HBR-3 & (9,10) R-3	OGLE	508	205
		CONTRACT NO. 64N98		
		ILLINOIS	FED. AID PROJECT	

*FAI ROUTE 39 (I-39) & FAP 567 (IL 38)

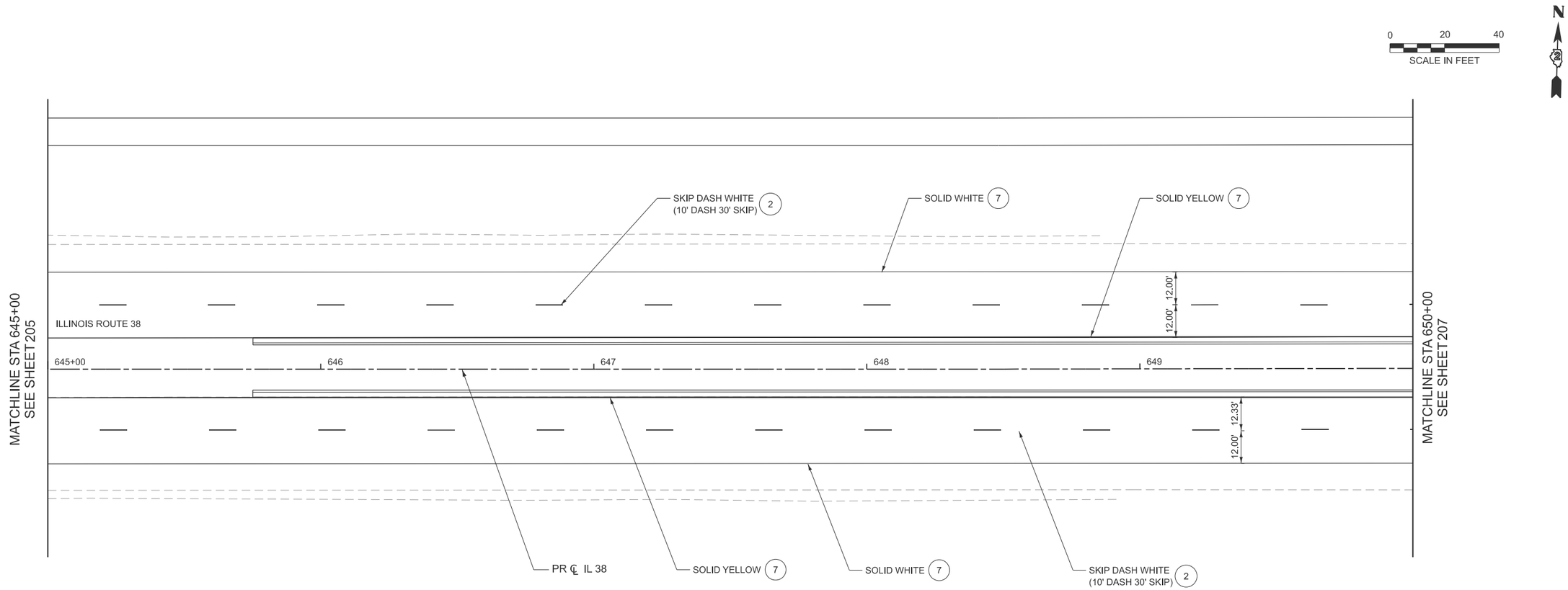

NOTES:

1. THE CONTRACTOR SHALL NOTIFY TRAFFIC OPERATIONS A MINIMUM OF 5 WORKING DAYS PRIOR TO PLACING PERMANENT PAVEMENT MARKINGS.

LEGEND

1. MOD URETH LTR & SYM WITH GRV RCSD PVT MRKG
2. PREF PL PM TD LN 7" WITH CONTRAST WITH GRV RCSD PVT MRKG 8"
3. PREF PL PM TD L 9" WITH CONTRAST WITH GRV RCSD PVT MRKG 10"
4. PREF PL PM TD L 11" WITH CONTRAST WITH GRV RCSD PVT MRKG 12"
5. PREF PL PM TD L 12" WITH GRV RCSD PVT MRKG 13"
6. PREF PL PM TD L 24" WITH GRV RCSD PVT MRKG 25"
7. MOD URETH PM LINE 4" WITH GRV RCSD PVT MRKG 5"
8. MOD URETH PM LINE 8" WITH GRV RCSD PVT MRKG 9"
9. MOD URETH PM LINE 12" WITH GRV RCSD PVT MRKG 13"

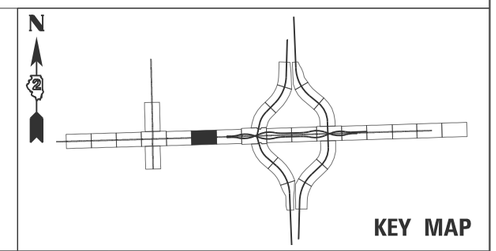

KEY MAP

MODEL: SHT_PLAN
FILE NAME: C:\Bentley\CONNECT10\11\Organization-Civil\IDOT_Standards\Cell\IDOT_Sheets.cell

HBM ENGINEERING GROUP, LLC

USER NAME =	DESIGNED - KAO	REVISED -	
	DRAWN - KAO	REVISED -	
	CHECKED - AMI	REVISED -	
PLOT DATE = 2/6/2025	DATE - 2/6/2025	REVISED -	

STATE OF ILLINOIS
DEPARTMENT OF TRANSPORTATION

PROPOSED PAVEMENT MARKING PLAN
IL 38

SCALE: | SHEET 8 OF 30 SHEETS | STA. 645+00 TO STA. 650+00

F.A.* RTE.	SECTION	COUNTY	TOTAL SHEETS	SHEET NO.
*	141-1HBR-3 & (9,10) R-3	OGLE	508	206
		CONTRACT NO. 64N98		
		ILLINOIS	FED. AID PROJECT	

*FAI ROUTE 39 (I-39) & FAP 567 (IL 38)

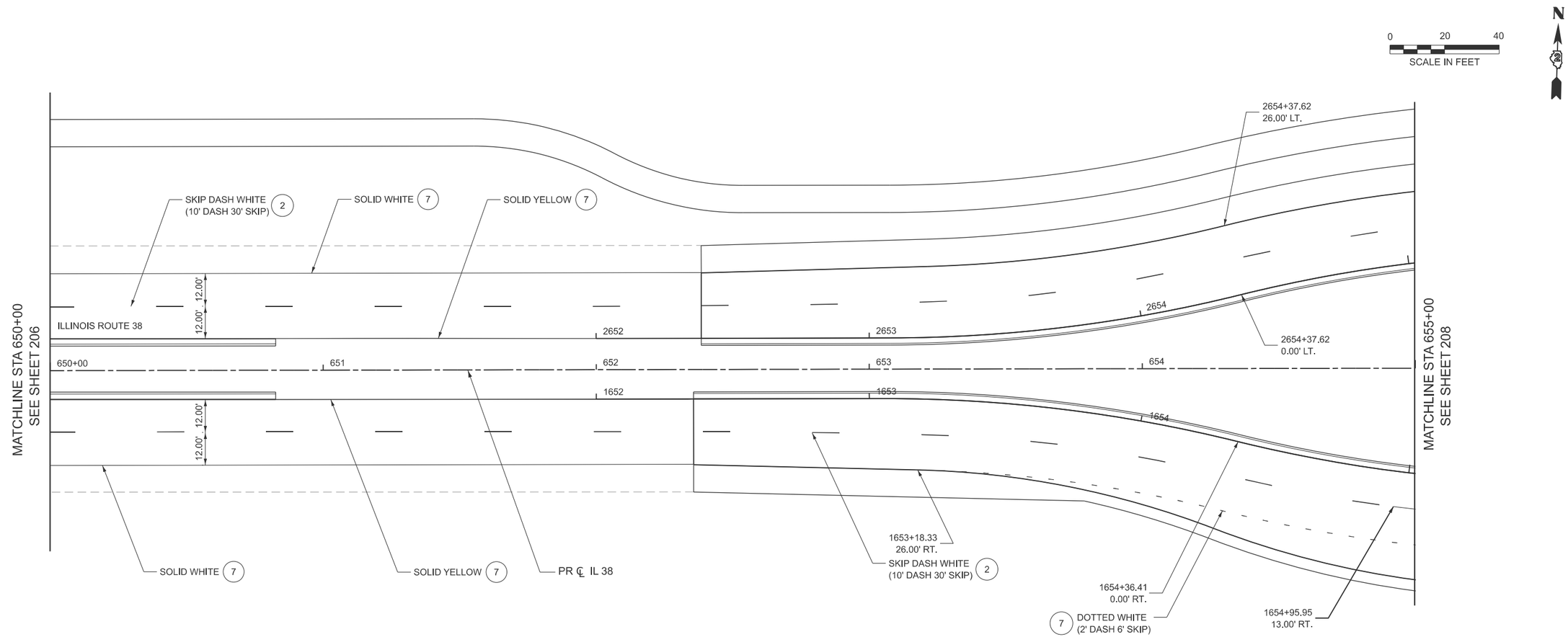

NOTES:

1. THE CONTRACTOR SHALL NOTIFY TRAFFIC OPERATIONS A MINIMUM OF 5 WORKING DAYS PRIOR TO PLACING PERMANENT PAVEMENT MARKINGS.

LEGEND

1. MOD URETH LTR & SYM WITH GRV RCSD PVT MRKG
2. PREF PL PM TD LN 7" WITH CONTRAST WITH GRV RCSD PVT MRKG 8"
3. PREF PL PM TD L 9" WITH CONTRAST WITH GRV RCSD PVT MRKG 10"
4. PREF PL PM TD L 11" WITH CONTRAST WITH GRV RCSD PVT MRKG 12"
5. PREF PL PM TD L 12" WITH GRV RCSD PVT MRKG 13"
6. PREF PL PM TD L 24" WITH GRV RCSD PVT MRKG 25"
7. MOD URETH PM LINE 4" WITH GRV RCSD PVT MRKG 5"
8. MOD URETH PM LINE 8" WITH GRV RCSD PVT MRKG 9"
9. MOD URETH PM LINE 12" WITH GRV RCSD PVT MRKG 13"

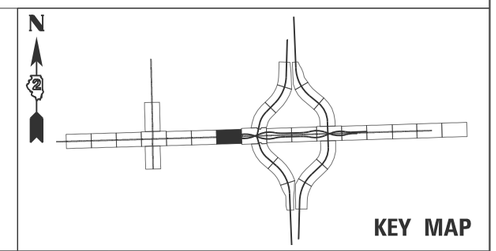

MODEL: SHT_PLAN
FILE NAME: C:\Bentley\CONNECT1011\Organization-Civil\IDOT_Standards\Civil\IDOT_Sheets.cel

HBM ENGINEERING GROUP, LLC

USER NAME =	DESIGNED - KAO	REVISED -	
	DRAWN - KAO	REVISED -	
	CHECKED - AMI	REVISED -	
PLOT DATE = 2/6/2025	DATE - 2/6/2025	REVISED -	

STATE OF ILLINOIS
DEPARTMENT OF TRANSPORTATION

PROPOSED PAVEMENT MARKING PLAN
IL 38

SCALE: | SHEET 9 OF 30 SHEETS | STA. 650+00 TO STA. 655+00

F.A.* RTE.	SECTION	COUNTY	TOTAL SHEETS	SHEET NO.
*	141-1HBR-3 & (9,10) R-3	OGLE	508	207
		CONTRACT NO. 64N98		
	ILLINOIS	FED. AID PROJECT		

*FAI ROUTE 39 (I-39) & FAP 567 (IL 38)

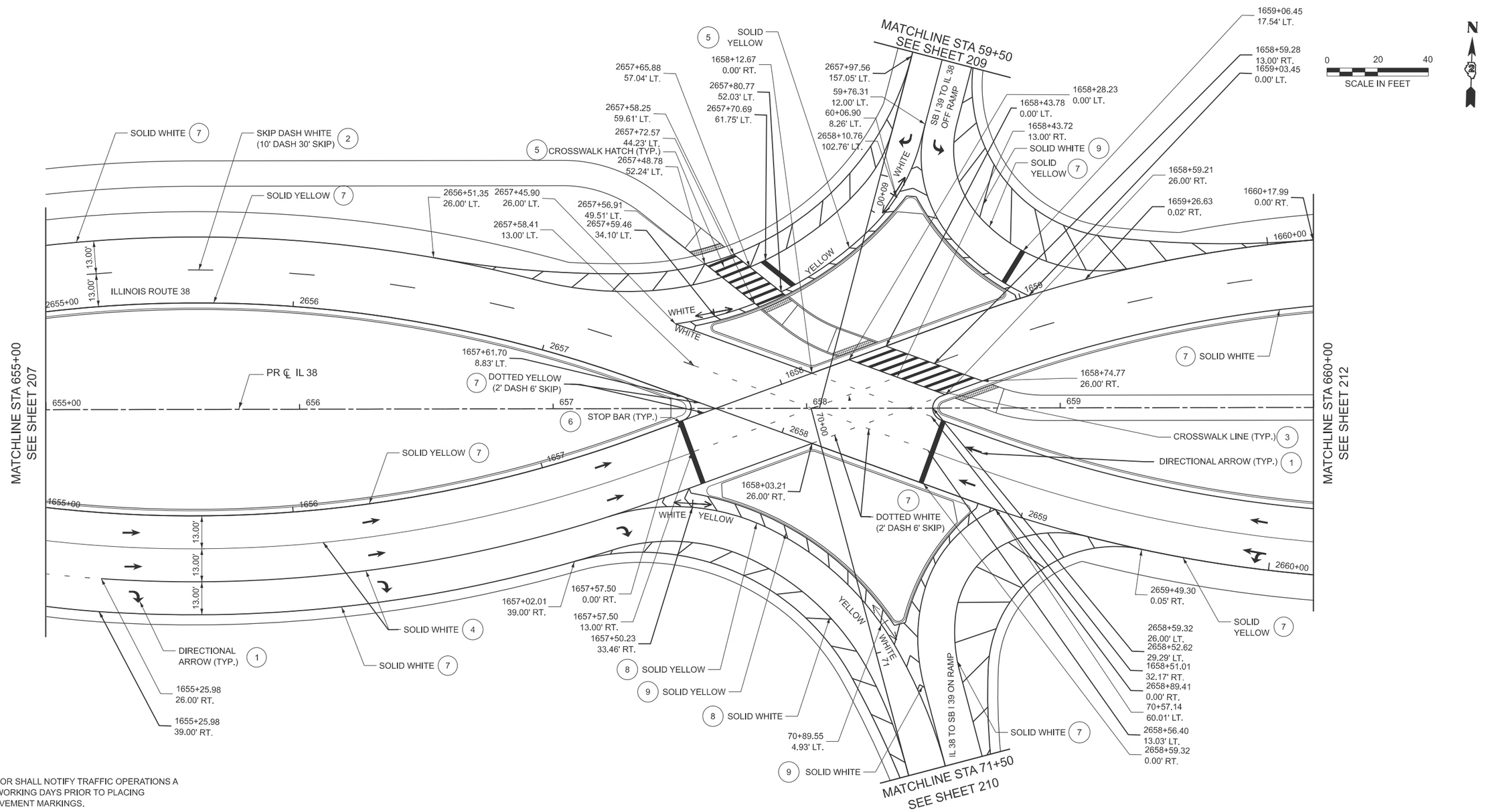

NOTES:

1. THE CONTRACTOR SHALL NOTIFY TRAFFIC OPERATIONS A MINIMUM OF 5 WORKING DAYS PRIOR TO PLACING PERMANENT PAVEMENT MARKINGS.

LEGEND

1. MOD URETH LTR & SYM WITH GRV RCSD PVT MRKG
2. PREF PL PM TD LN 7" WITH CONTRAST WITH GRV RCSD PVT MRKG 8"
3. PREF PL PM TD L 9" WITH CONTRAST WITH GRV RCSD PVT MRKG 10"
4. PREF PL PM TD L 11" WITH CONTRAST WITH GRV RCSD PVT MRKG 12"
5. PREF PL PM TD L 12" WITH GRV RCSD PVT MRKG 13"
6. PREF PL PM TD L 24" WITH GRV RCSD PVT MRKG 25"
7. MOD URETH PM LINE 4" WITH GRV RCSD PVT MRKG 5"
8. MOD URETH PM LINE 8" WITH GRV RCSD PVT MRKG 9"
9. MOD URETH PM LINE 12" WITH GRV RCSD PVT MRKG 13"

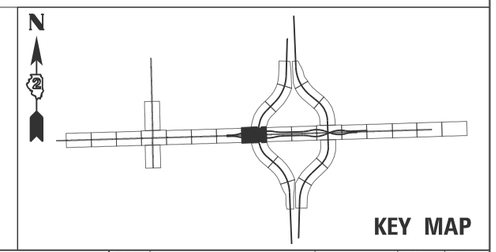

MODEL: SHT_PLAN
FILE NAME: C:\Bentley\CONNECT10\11\Organization-Civil\IDOT_Standards\Cell\IDOT_Sheets.cel

HBM ENGINEERING GROUP, LLC

USER NAME =	DESIGNED - KAO	REVISED -	
	DRAWN - KAO	REVISED -	
	CHECKED - AMI	REVISED -	
PLOT DATE = 2/6/2025	DATE - 2/6/2025	REVISED -	

STATE OF ILLINOIS
DEPARTMENT OF TRANSPORTATION

PROPOSED PAVEMENT MARKING PLAN
IL 38 AND I-39 INTERCHANGE

SCALE: | SHEET 10 OF 30 SHEETS | STA. 655+00 TO STA. 660+00

F.A.* RTE.	SECTION	COUNTY	TOTAL SHEETS	SHEET NO.
*	141-1HBR-3 & (9,10) R-3	OGLE	508	208
		CONTRACT NO. 64N98		
		ILLINOIS	FED. AID PROJECT	

*FAI ROUTE 39 (I-39) & FAP 567 (IL 38)

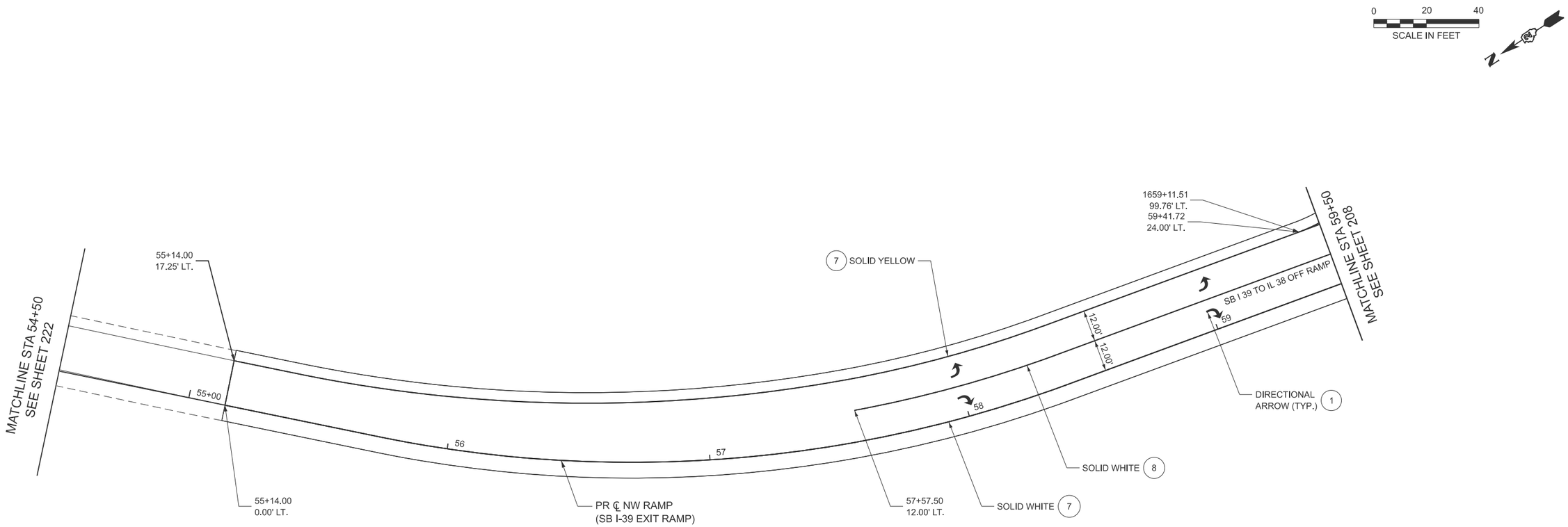

NOTES:

1. THE CONTRACTOR SHALL NOTIFY TRAFFIC OPERATIONS A MINIMUM OF 5 WORKING DAYS PRIOR TO PLACING PERMANENT PAVEMENT MARKINGS.

LEGEND

1. MOD URETH LTR & SYM WITH GRV RCSD PVT MRKG
2. PREF PL PM TD LN 7" WITH CONTRAST WITH GRV RCSD PVT MRKG 8"
3. PREF PL PM TD L 9" WITH CONTRAST WITH GRV RCSD PVT MRKG 10"
4. PREF PL PM TD L 11" WITH CONTRAST WITH GRV RCSD PVT MRKG 12"
5. PREF PL PM TD L 12" WITH GRV RCSD PVT MRKG 13"
6. PREF PL PM TD L 24" WITH GRV RCSD PVT MRKG 25"
7. MOD URETH PM LINE 4" WITH GRV RCSD PVT MRKG 5"
8. MOD URETH PM LINE 8" WITH GRV RCSD PVT MRKG 9"
9. MOD URETH PM LINE 12" WITH GRV RCSD PVT MRKG 13"

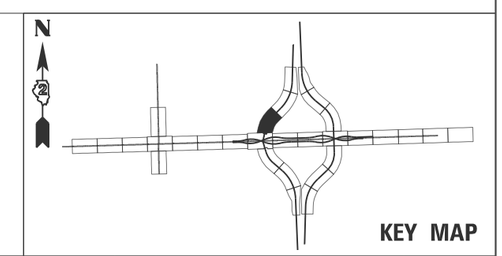

KEY MAP

MODEL: SHT_PLAN
FILE NAME: C:\Bentley\CONNECT10\1\Organization-Civil\IDOT_Standards\Civil\IDOT_Sheets.cel

HBM ENGINEERING GROUP, LLC

USER NAME =	DESIGNED - KAO	REVISED -	
	DRAWN - KAO	REVISED -	
	CHECKED - AMI	REVISED -	
PLOT DATE = 2/6/2025	DATE - 2/6/2025	REVISED -	

STATE OF ILLINOIS
DEPARTMENT OF TRANSPORTATION

PROPOSED PAVEMENT MARKING PLAN
I-39 SB EXIT RAMP

SCALE: | SHEET 11 OF 30 SHEETS | STA. 54+50 TO STA. 59+50

F.A.* RTE.	SECTION	COUNTY	TOTAL SHEETS	SHEET NO.
*	141-1HBR-3 & (9,10) R-3	OGLE	508	209
		CONTRACT NO. 64N98		
	ILLINOIS	FED. AID PROJECT		

*FAI ROUTE 39 (I-39) & FAP 567 (IL 38)

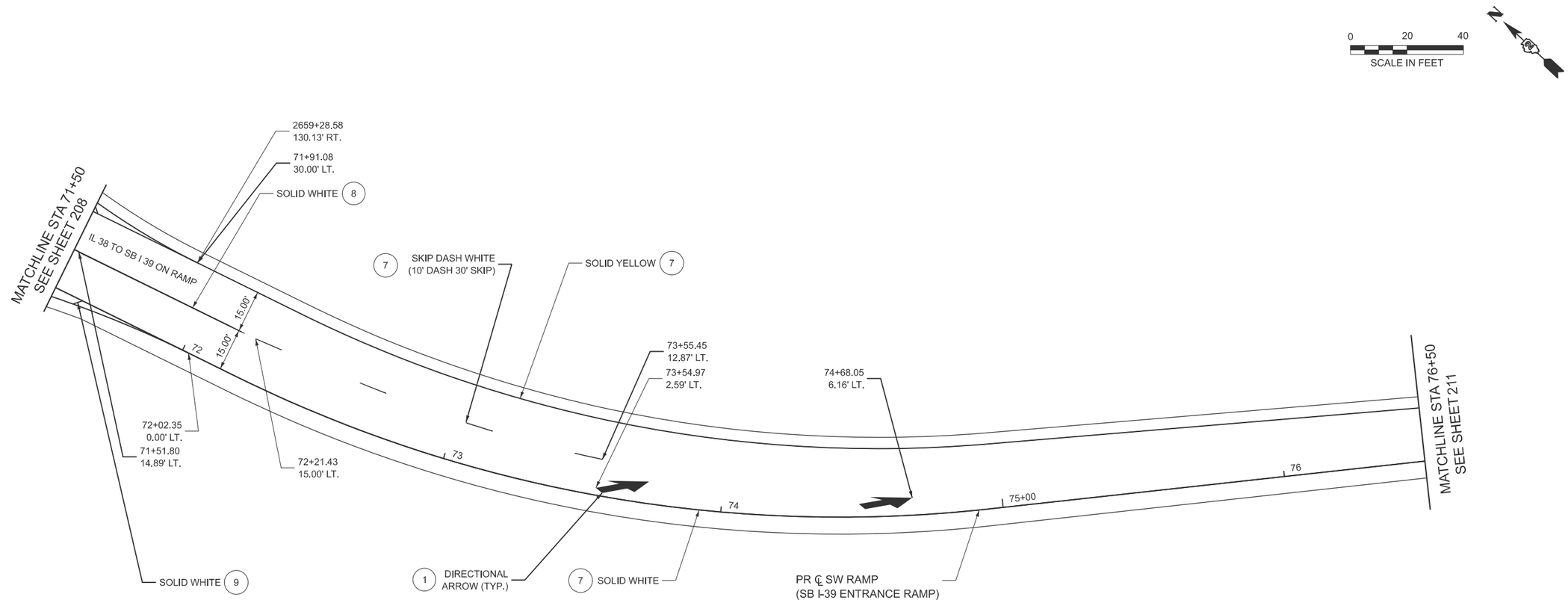

NOTES:

1. THE CONTRACTOR SHALL NOTIFY TRAFFIC OPERATIONS A MINIMUM OF 5 WORKING DAYS PRIOR TO PLACING PERMANENT PAVEMENT MARKINGS.

LEGEND

1. MOD URETH LTR & SYM WITH GRV RCSD PVT MRKG
2. PREF PL PM TD LN 7" WITH CONTRAST WITH GRV RCSD PVT MRKG 8"
3. PREF PL PM TD L 9" WITH CONTRAST WITH GRV RCSD PVT MRKG 10"
4. PREF PL PM TD L 11" WITH CONTRAST WITH GRV RCSD PVT MRKG 12"
5. PREF PL PM TD L 12" WITH GRV RCSD PVT MRKG 13"
6. PREF PL PM TD L 24" WITH GRV RCSD PVT MRKG 25"
7. MOD URETH PM LINE 4" WITH GRV RCSD PVT MRKG 5"
8. MOD URETH PM LINE 8" WITH GRV RCSD PVT MRKG 9"
9. MOD URETH PM LINE 12" WITH GRV RCSD PVT MRKG 13"

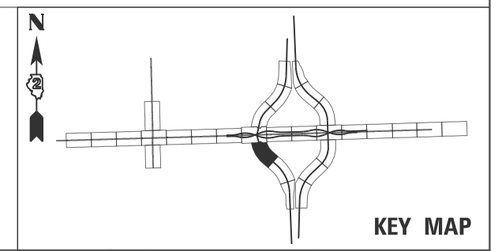

KEY MAP

MODEL: SHT_PLAN
FILE NAME: C:\Bentley\CONNECT\011\Organization-Civil\IDOT_Standards\CivilIDOT_Sheets.cel

HBM ENGINEERING GROUP, LLC

USER NAME =	DESIGNED - KAO	REVISED -	
	DRAWN - KAO	REVISED -	
	CHECKED - AMI	REVISED -	
PLOT DATE = 2/6/2025	DATE - 2/6/2025	REVISED -	

STATE OF ILLINOIS
DEPARTMENT OF TRANSPORTATION

PROPOSED PAVEMENT MARKING PLAN
I-39 SB ENTRANCE RAMP

SCALE: | SHEET 12 OF 30 SHEETS | STA. 71+50 | TO STA. 76+50

F.A.* RTE.	SECTION	COUNTY	TOTAL SHEETS	SHEET NO.
*	141-1HBR-3 & (9,10) R-3	OGLE	508	210
		CONTRACT NO. 64N98		
		ILLINOIS	FED. AID PROJECT	

*FAI ROUTE 39 (I-39) & FAP 567 (IL 38)

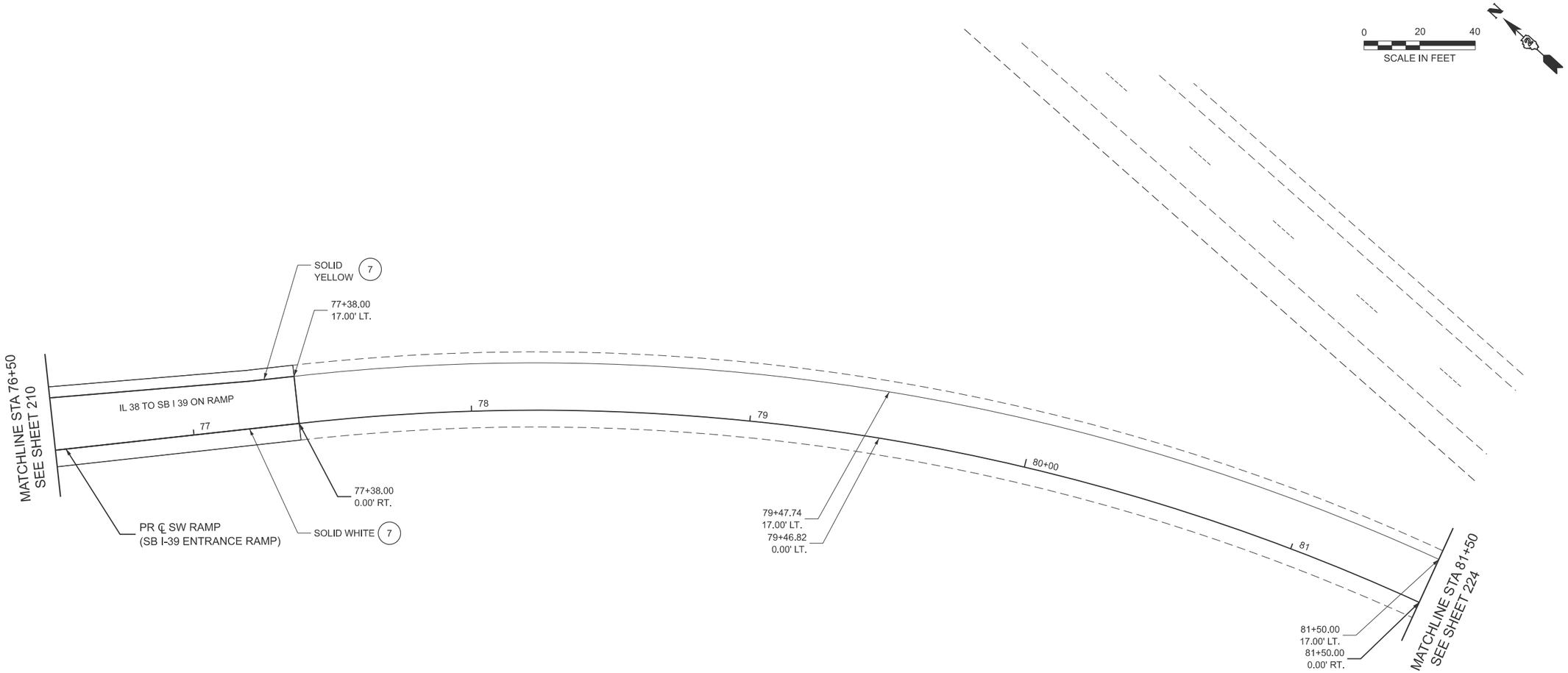

NOTES:

1. THE CONTRACTOR SHALL NOTIFY TRAFFIC OPERATIONS A MINIMUM OF 5 WORKING DAYS PRIOR TO PLACING PERMANENT PAVEMENT MARKINGS.

LEGEND

1. MOD URETH LTR & SYM WITH GRV RCSD PVT MRKG
2. PREF PL PM TD LN 7" WITH CONTRAST WITH GRV RCSD PVT MRKG 8"
3. PREF PL PM TD L 9" WITH CONTRAST WITH GRV RCSD PVT MRKG 10"
4. PREF PL PM TD L 11" WITH CONTRAST WITH GRV RCSD PVT MRKG 12"
5. PREF PL PM TD L 12" WITH GRV RCSD PVT MRKG 13"
6. PREF PL PM TD L 24" WITH GRV RCSD PVT MRKG 25"
7. MOD URETH PM LINE 4" WITH GRV RCSD PVT MRKG 5"
8. MOD URETH PM LINE 8" WITH GRV RCSD PVT MRKG 9"
9. MOD URETH PM LINE 12" WITH GRV RCSD PVT MRKG 13"

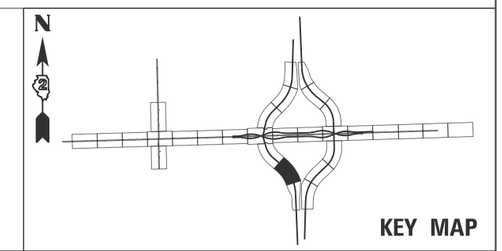

KEY MAP

MODEL: SHT_PLAN
FILE NAME: C:\Bentley\CONNECT10111\Organization-Civil\IDOT_Standards\Cell\IDOT_Sheets.cel

HBM ENGINEERING GROUP, LLC

USER NAME =	DESIGNED - KAO	REVISED -	
	DRAWN - KAO	REVISED -	
	CHECKED - AMI	REVISED -	
PLOT DATE = 2/6/2025	DATE - 2/6/2025	REVISED -	

STATE OF ILLINOIS
DEPARTMENT OF TRANSPORTATION

PROPOSED PAVEMENT MARKING PLAN
I-39 SB ENTRANCE RAMP

SCALE: | SHEET 13 OF 30 SHEETS | STA. 76+50 TO STA. 81+50

F.A.* RTE.	SECTION	COUNTY	TOTAL SHEETS	SHEET NO.
*	141-1HBR-3 & (9,10) R-3	OGLE	508	211

CONTRACT NO. 64N98

ILLINOIS | FED. AID PROJECT

*FAI ROUTE 39 (I-39) & FAP 567 (IL 38)

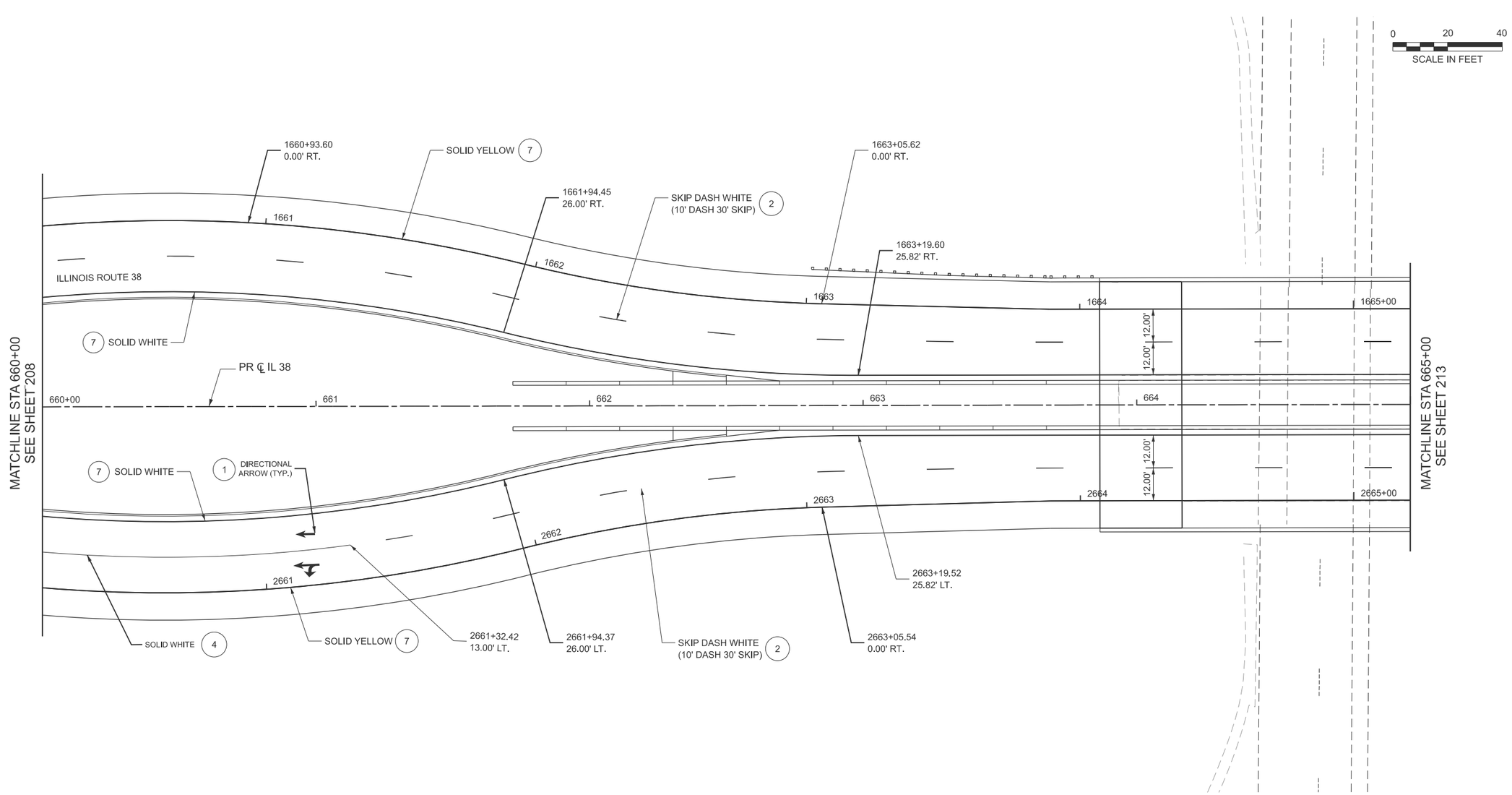

NOTES:

1. THE CONTRACTOR SHALL NOTIFY TRAFFIC OPERATIONS A MINIMUM OF 5 WORKING DAYS PRIOR TO PLACING PERMANENT PAVEMENT MARKINGS.

LEGEND

1. MOD URETH LTR & SYM WITH GRV RCSD PVT MRKG
2. PREF PL PM TD LN 7" WITH CONTRAST WITH GRV RCSD PVT MRKG 8"
3. PREF PL PM TD L 9" WITH CONTRAST WITH GRV RCSD PVT MRKG 10"
4. PREF PL PM TD L 11" WITH CONTRAST WITH GRV RCSD PVT MRKG 12"
5. PREF PL PM TD L 12" WITH GRV RCSD PVT MRKG 13"
6. PREF PL PM TD L 24" WITH GRV RCSD PVT MRKG 25"
7. MOD URETH PM LINE 4" WITH GRV RCSD PVT MRKG 5"
8. MOD URETH PM LINE 8" WITH GRV RCSD PVT MRKG 9"
9. MOD URETH PM LINE 12" WITH GRV RCSD PVT MRKG 13"

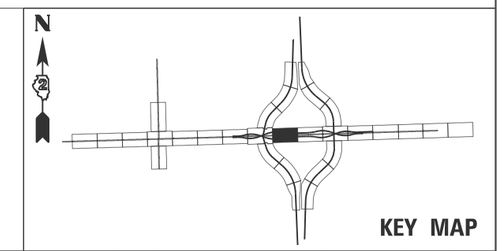

KEY MAP

MODEL: SHT_PLAN
FILE NAME: C:\Bentley\CONNECT10111\Organization-Civil\IDOT_Standards\Cell\IDOT_Sheets.cel

HBM ENGINEERING GROUP, LLC

USER NAME =	DESIGNED - KAO	REVISED -	
	DRAWN - KAO	REVISED -	
	CHECKED - AMI	REVISED -	
PLOT DATE = 2/6/2025	DATE - 2/6/2025	REVISED -	

STATE OF ILLINOIS
DEPARTMENT OF TRANSPORTATION

PROPOSED PAVEMENT MARKING PLAN
IL 38

SCALE: | SHEET 14 OF 30 SHEETS | STA. 660+00 TO STA. 665+00

F.A.* RTE.	SECTION	COUNTY	TOTAL SHEETS	SHEET NO.
*	141-1HBR-3 & (9,10) R-3	OGLE	508	212

CONTRACT NO. 64N98

ILLINOIS | FED. AID PROJECT

*FAI ROUTE 39 (I-39) & FAP 567 (IL 38)

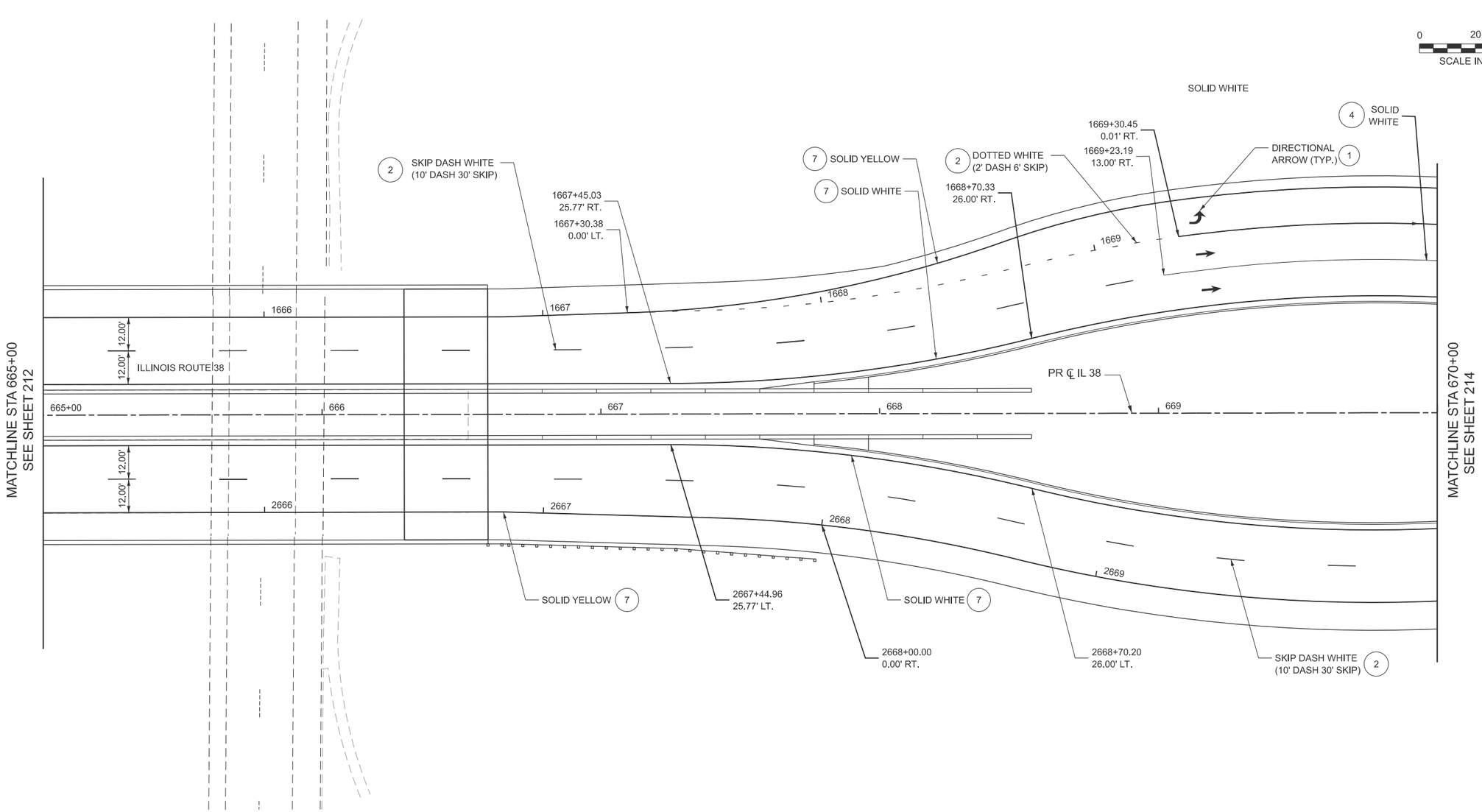

NOTES:

1. THE CONTRACTOR SHALL NOTIFY TRAFFIC OPERATIONS A MINIMUM OF 5 WORKING DAYS PRIOR TO PLACING PERMANENT PAVEMENT MARKINGS.

LEGEND

1. MOD URETH LTR & SYM WITH GRV RCSD PVT MRKG
2. PREF PL PM TD LN 7" WITH CONTRAST WITH GRV RCSD PVT MRKG 8"
3. PREF PL PM TD L 9" WITH CONTRAST WITH GRV RCSD PVT MRKG 10"
4. PREF PL PM TD L 11" WITH CONTRAST WITH GRV RCSD PVT MRKG 12"
5. PREF PL PM TD L 12" WITH GRV RCSD PVT MRKG 13"
6. PREF PL PM TD L 24" WITH GRV RCSD PVT MRKG 25"
7. MOD URETH PM LINE 4" WITH GRV RCSD PVT MRKG 5"
8. MOD URETH PM LINE 8" WITH GRV RCSD PVT MRKG 9"
9. MOD URETH PM LINE 12" WITH GRV RCSD PVT MRKG 13"

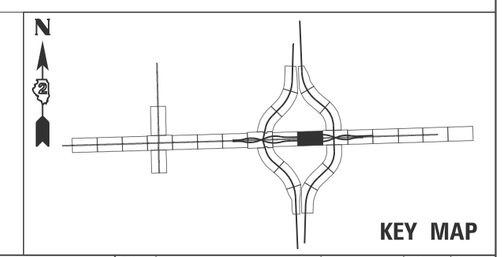

KEY MAP

MODEL: SHT_PLAN
FILE NAME: C:\Bentley\CONNECT10.11\Organization-Civil\IDOT_Standards\Civil\IDOT_Sheets.cel

HBM ENGINEERING GROUP, LLC

USER NAME =	DESIGNED - KAO	REVISED -	
	DRAWN - KAO	REVISED -	
	CHECKED - AMI	REVISED -	
PLOT DATE = 2/6/2025	DATE - 2/6/2025	REVISED -	

STATE OF ILLINOIS
DEPARTMENT OF TRANSPORTATION

PROPOSED PAVEMENT MARKING PLAN
IL 38

SCALE: SHEET 15 OF 30 SHEETS STA. TO STA.

F.A.* RTE.	SECTION	COUNTY	TOTAL SHEETS	SHEET NO.
*	141-1HBR-3 & (9,10) R-3	OGLE	508	213

CONTRACT NO. 64N98

ILLINOIS | FED. AID PROJECT

*FAI ROUTE 39 (I-39) & FAP 567 (IL 38)

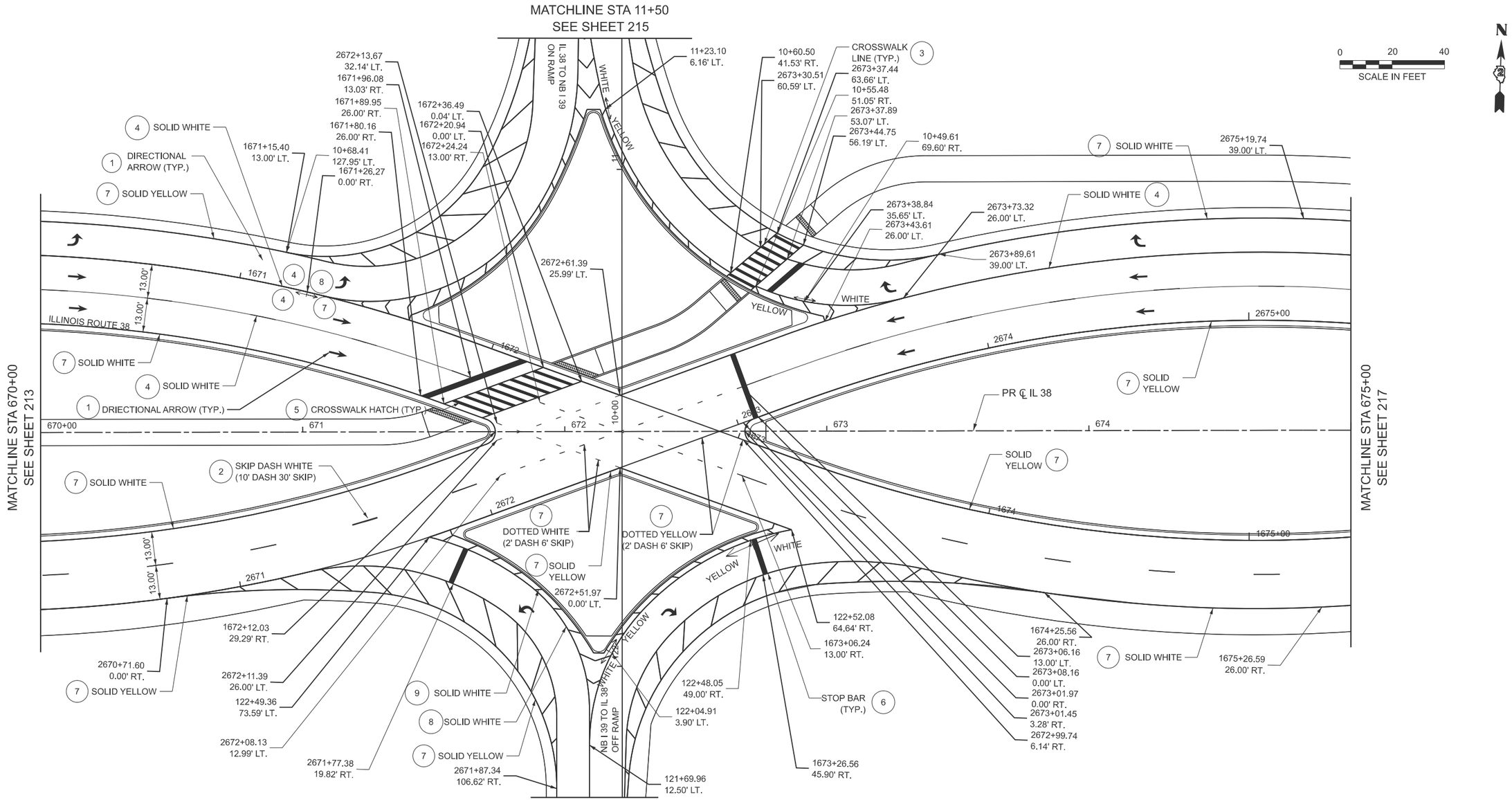

NOTES:

1. THE CONTRACTOR SHALL NOTIFY TRAFFIC OPERATIONS A MINIMUM OF 5 WORKING DAYS PRIOR TO PLACING PERMANENT PAVEMENT MARKINGS.

LEGEND

1. MOD URETH LTR & SYM WITH GRV RCSD PVT MRKG
2. PREF PL PM TD LN 7" WITH CONTRAST WITH GRV RCSD PVT MRKG 8"
3. PREF PL PM TD L 9" WITH CONTRAST WITH GRV RCSD PVT MRKG 10"
4. PREF PL PM TD L 11" WITH CONTRAST WITH GRV RCSD PVT MRKG 12"
5. PREF PL PM TD L 12" WITH GRV RCSD PVT MRKG 13"
6. PREF PL PM TD L 24" WITH GRV RCSD PVT MRKG 25"
7. MOD URETH PM LINE 4" WITH GRV RCSD PVT MRKG 5"
8. MOD URETH PM LINE 8" WITH GRV RCSD PVT MRKG 9"
9. MOD URETH PM LINE 12" WITH GRV RCSD PVT MRKG 13"

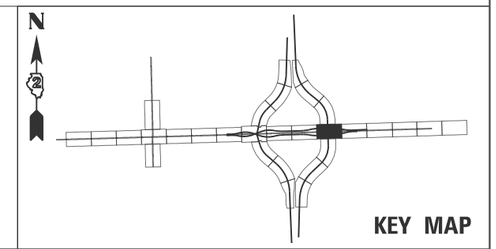

MODEL: SHT_PLAN
FILE NAME: C:\Bentley\CONNECT10.11\Organization~Civil\IDOT_Standards\Civil\IDOT_Sheets.cel

HBM ENGINEERING GROUP, LLC

USER NAME =	DESIGNED - KAO	REVISED -	
	DRAWN - KAO	REVISED -	
	CHECKED - AMI	REVISED -	
PLOT DATE = 2/6/2025	DATE - 2/6/2025	REVISED -	

STATE OF ILLINOIS
DEPARTMENT OF TRANSPORTATION

PROPOSED PAVEMENT MARKING PLAN
IL 38 AND I-39 INTERCHANGE

SCALE: | SHEET 16 OF 30 SHEETS | STA. 670+00 TO STA. 675+00

F.A.* RTE.	SECTION	COUNTY	TOTAL SHEETS	SHEET NO.
*	141-1HBR-3 & (9,10) R-3	OGLE	508	214
		CONTRACT NO. 64N98		
		ILLINOIS	FED. AID PROJECT	

*FAI ROUTE 39 (I-39) & FAP 567 (IL 38)

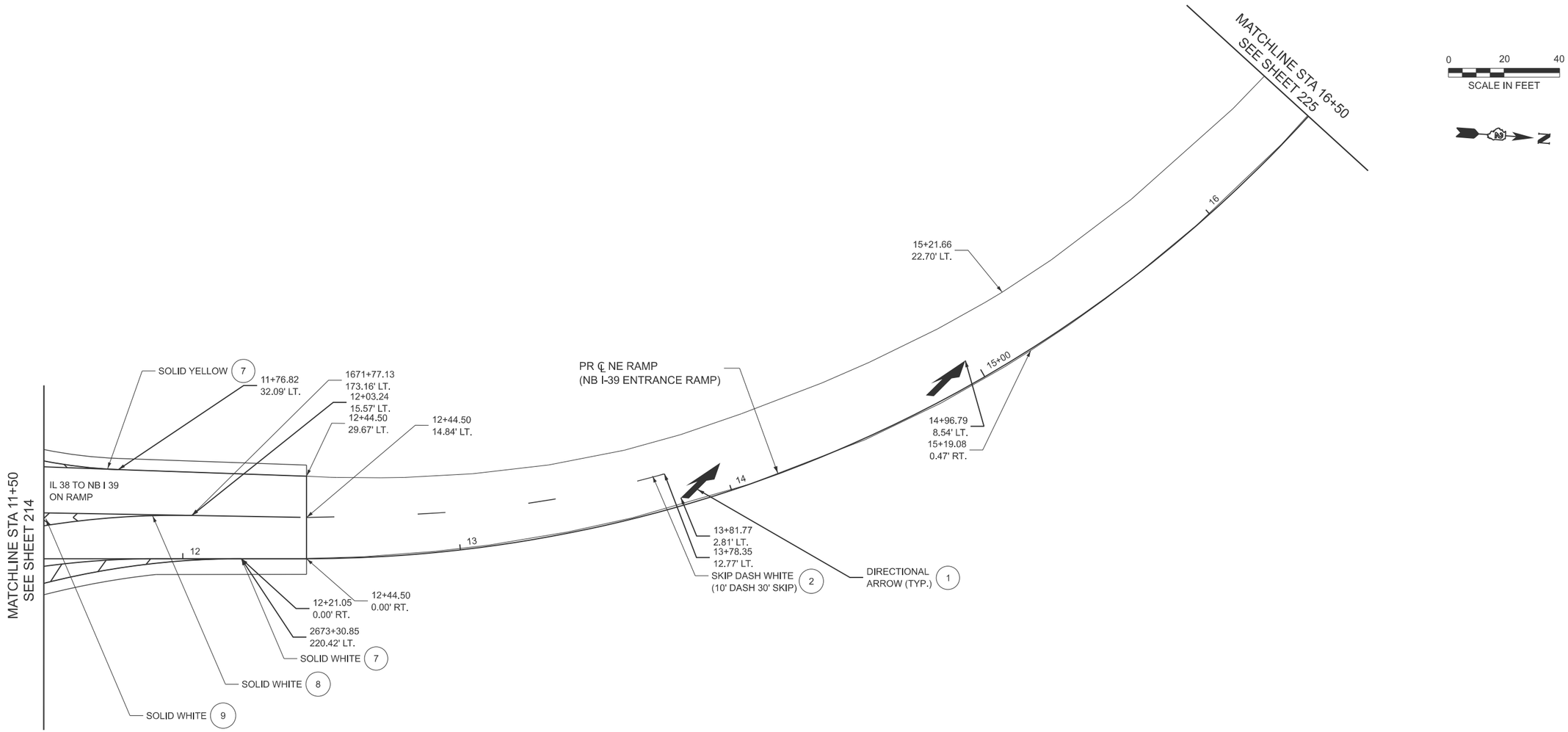

NOTES:
1. THE CONTRACTOR SHALL NOTIFY TRAFFIC OPERATIONS A MINIMUM OF 5 WORKING DAYS PRIOR TO PLACING PERMANENT PAVEMENT MARKINGS.

LEGEND

1. MOD URETH LTR & SYM WITH GRV RCSD PVT MRKG
2. PREF PL PM TD LN 7" WITH CONTRAST WITH GRV RCSD PVT MRKG 8"
3. PREF PL PM TD L 9" WITH CONTRAST WITH GRV RCSD PVT MRKG 10"
4. PREF PL PM TD L 11" WITH CONTRAST WITH GRV RCSD PVT MRKG 12"
5. PREF PL PM TD L 12" WITH GRV RCSD PVT MRKG 13"
6. PREF PL PM TD L 24" WITH GRV RCSD PVT MRKG 25"
7. MOD URETH PM LINE 4" WITH GRV RCSD PVT MRKG 5"
8. MOD URETH PM LINE 8" WITH GRV RCSD PVT MRKG 9"
9. MOD URETH PM LINE 12" WITH GRV RCSD PVT MRKG 13"

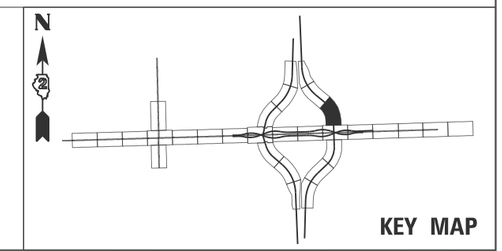

MODEL: SHT_PLAN
FILE NAME: C:\Bentley\CONNECT10.11\Organization-Civil\IDOT_Standards\Civil\IDOT_Sheets.cel

HBM ENGINEERING GROUP, LLC

USER NAME =	DESIGNED - KAO	REVISED -	
	DRAWN - KAO	REVISED -	
	CHECKED - AMI	REVISED -	
PLOT DATE = 2/6/2025	DATE - 2/6/2025	REVISED -	

STATE OF ILLINOIS
DEPARTMENT OF TRANSPORTATION

PROPOSED PAVEMENT MARKING PLAN
I-39 NB EXIT RAMP

SCALE: | SHEET 17 OF 30 SHEETS | STA. 11+50 | TO STA. 16+50

F.A.* RTE.	SECTION	COUNTY	TOTAL SHEETS	SHEET NO.
*	141-1HBR-3 & (9,10) R-3	OGLE	508	215
		CONTRACT NO. 64N98		
	ILLINOIS	FED. AID PROJECT		

*FAI ROUTE 39 (I-39) & FAP 567 (IL 38)

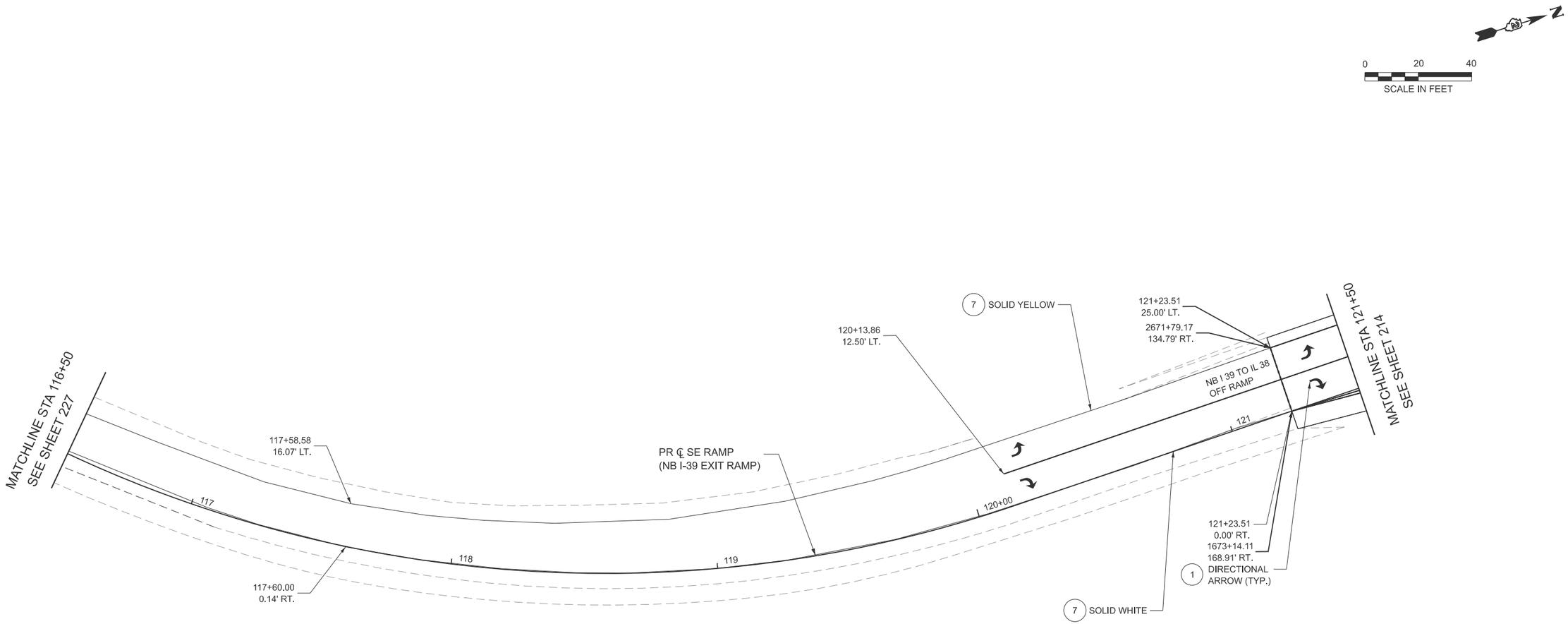

NOTES:

1. THE CONTRACTOR SHALL NOTIFY TRAFFIC OPERATIONS A MINIMUM OF 5 WORKING DAYS PRIOR TO PLACING PERMANENT PAVEMENT MARKINGS.

LEGEND

1. MOD URETH LTR & SYM WITH GRV RCSD PVT MRKG
2. PREF PL PM TD LN 7" WITH CONTRAST WITH GRV RCSD PVT MRKG 8"
3. PREF PL PM TD L 9" WITH CONTRAST WITH GRV RCSD PVT MRKG 10"
4. PREF PL PM TD L 11" WITH CONTRAST WITH GRV RCSD PVT MRKG 12"
5. PREF PL PM TD L 12" WITH GRV RCSD PVT MRKG 13"
6. PREF PL PM TD L 24" WITH GRV RCSD PVT MRKG 25"
7. MOD URETH PM LINE 4" WITH GRV RCSD PVT MRKG 5"
8. MOD URETH PM LINE 8" WITH GRV RCSD PVT MRKG 9"
9. MOD URETH PM LINE 12" WITH GRV RCSD PVT MRKG 13"

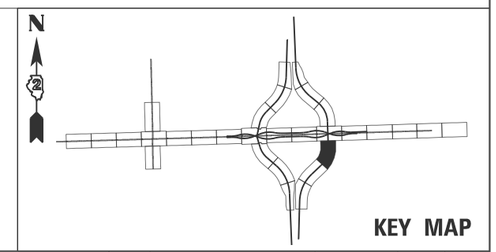

KEY MAP

MODEL: SHT_PLAN
FILE NAME: C:\Bentley\CONNECT10.11\Organization~Civil\IDOT_Standards\Civil\IDOT_Sheets.cel

HBM ENGINEERING GROUP, LLC

USER NAME =	DESIGNED - KAO	REVISED -	
	DRAWN - KAO	REVISED -	
	CHECKED - AMI	REVISED -	
PLOT DATE = 2/6/2025	DATE - 2/6/2025	REVISED -	

STATE OF ILLINOIS
DEPARTMENT OF TRANSPORTATION

PROPOSED PAVEMENT MARKING PLAN
I-39 NB EXIT RAMP

SCALE: | SHEET 18 OF 30 SHEETS | STA. 116+50 TO STA. 121+50

F.A.* RTE.	SECTION	COUNTY	TOTAL SHEETS	SHEET NO.
*	141-1HBR-3 & (9,10) R-3	OGLE	508	216
		CONTRACT NO. 64N98		
		ILLINOIS	FED. AID PROJECT	

*FAI ROUTE 39 (I-39) & FAP 567 (IL 38)

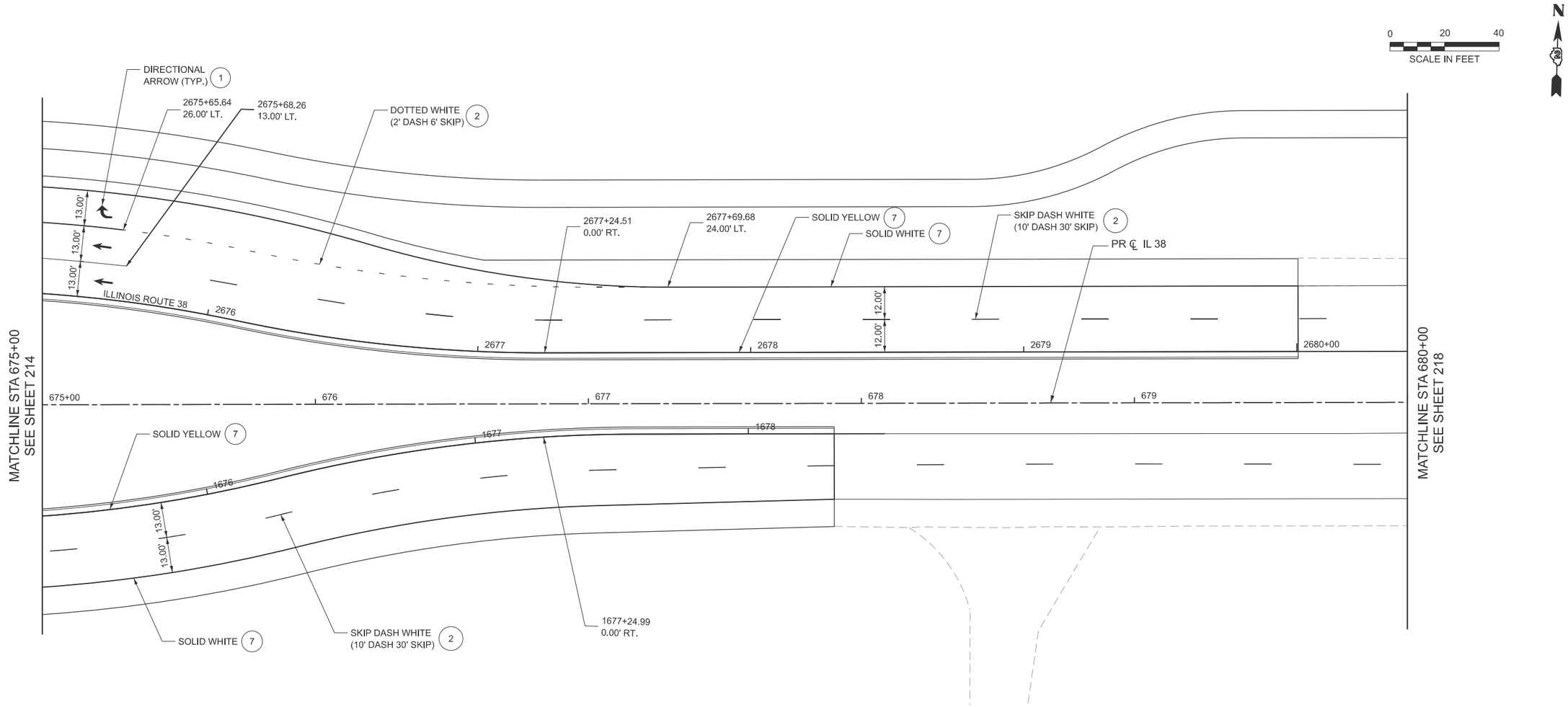

NOTES:

1. THE CONTRACTOR SHALL NOTIFY TRAFFIC OPERATIONS A MINIMUM OF 5 WORKING DAYS PRIOR TO PLACING PERMANENT PAVEMENT MARKINGS.

LEGEND

1. MOD URETH LTR & SYM WITH GRV RCSD PVT MRKG
2. PREF PL PM TD LN 7" WITH CONTRAST WITH GRV RCSD PVT MRKG 8"
3. PREF PL PM TD L 9" WITH CONTRAST WITH GRV RCSD PVT MRKG 10"
4. PREF PL PM TD L 11" WITH CONTRAST WITH GRV RCSD PVT MRKG 12"
5. PREF PL PM TD L 12" WITH GRV RCSD PVT MRKG 13"
6. PREF PL PM TD L 24" WITH GRV RCSD PVT MRKG 25"
7. MOD URETH PM LINE 4" WITH GRV RCSD PVT MRKG 5"
8. MOD URETH PM LINE 8" WITH GRV RCSD PVT MRKG 9"
9. MOD URETH PM LINE 12" WITH GRV RCSD PVT MRKG 13"

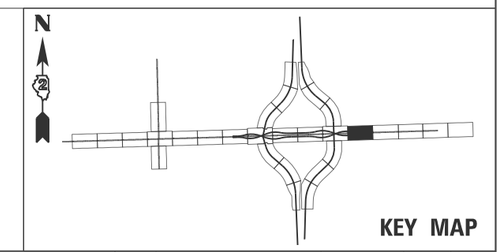

KEY MAP

MODEL: SHT_PLAN
FILE NAME: C:\Bentley\CONNECT10.11\Organization-Civil\IDOT_Standards\Cell\IDOT_Sheets.cel

HBM ENGINEERING GROUP, LLC

USER NAME =	DESIGNED - KAO	REVISED -	
	DRAWN - KAO	REVISED -	
	CHECKED - AMI	REVISED -	
PLOT DATE = 2/6/2025	DATE - 2/6/2025	REVISED -	

STATE OF ILLINOIS
DEPARTMENT OF TRANSPORTATION

PROPOSED PAVEMENT MARKING PLAN
IL 38

SCALE: | SHEET 19 OF 30 SHEETS | STA. 675+00 TO STA. 680+00

F.A.* RTE.	SECTION	COUNTY	TOTAL SHEETS	SHEET NO.
*	141-1HBR-3 & (9,10) R-3	OGLE	508	217
		CONTRACT NO. 64N98		
		ILLINOIS	FED. AID PROJECT	

*FAI ROUTE 39 (I-39) & FAP 567 (IL 38)

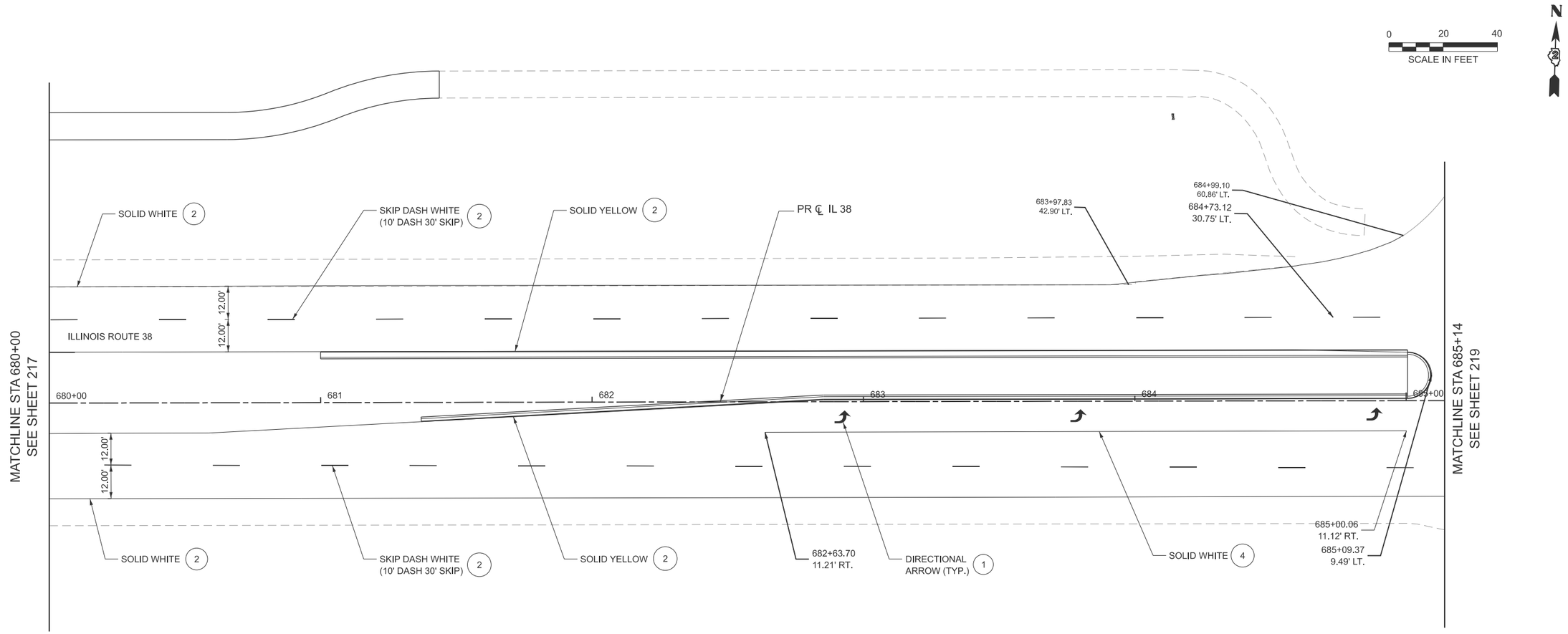

NOTES:

1. THE CONTRACTOR SHALL NOTIFY TRAFFIC OPERATIONS A MINIMUM OF 5 WORKING DAYS PRIOR TO PLACING PERMANENT PAVEMENT MARKINGS.

LEGEND

1. MOD URETH LTR & SYM WITH GRV RCSD PVT MRKG
2. PREF PL PM TD LN 7" WITH CONTRAST WITH GRV RCSD PVT MRKG 8"
3. PREF PL PM TD L 9" WITH CONTRAST WITH GRV RCSD PVT MRKG 10"
4. PREF PL PM TD L 11" WITH CONTRAST WITH GRV RCSD PVT MRKG 12"
5. PREF PL PM TD L 12" WITH GRV RCSD PVT MRKG 13"
6. PREF PL PM TD L 24" WITH GRV RCSD PVT MRKG 25"
7. MOD URETH PM LINE 4" WITH GRV RCSD PVT MRKG 5"
8. MOD URETH PM LINE 8" WITH GRV RCSD PVT MRKG 9"
9. MOD URETH PM LINE 12" WITH GRV RCSD PVT MRKG 13"

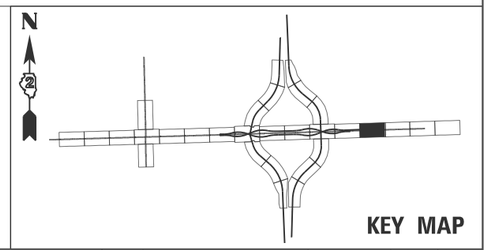

KEY MAP

MODEL: SHT_PLAN
FILE NAME: C:\Bentley\CONNECT10111\Organization-Civil\IDOT_Standards\Cell\IDOT_Sheets.cel

HBM ENGINEERING GROUP, LLC

USER NAME =	DESIGNED - KAO	REVISED -	
	DRAWN - KAO	REVISED -	
	CHECKED - AMI	REVISED -	
PLOT DATE = 2/6/2025	DATE - 2/6/2025	REVISED -	

STATE OF ILLINOIS
DEPARTMENT OF TRANSPORTATION

PROPOSED PAVEMENT MARKING PLAN
IL 38

SCALE: | SHEET 20 OF 30 SHEETS | STA. 680+00 | TO STA. 685+14

F.A.* RTE.	SECTION	COUNTY	TOTAL SHEETS	SHEET NO.
*	141-1HBR-3 & (9,10) R-3	OGLE	508	218
		CONTRACT NO. 64N98		
	ILLINOIS	FED. AID PROJECT		

*FAI ROUTE 39 (I-39) & FAP 567 (IL 38)

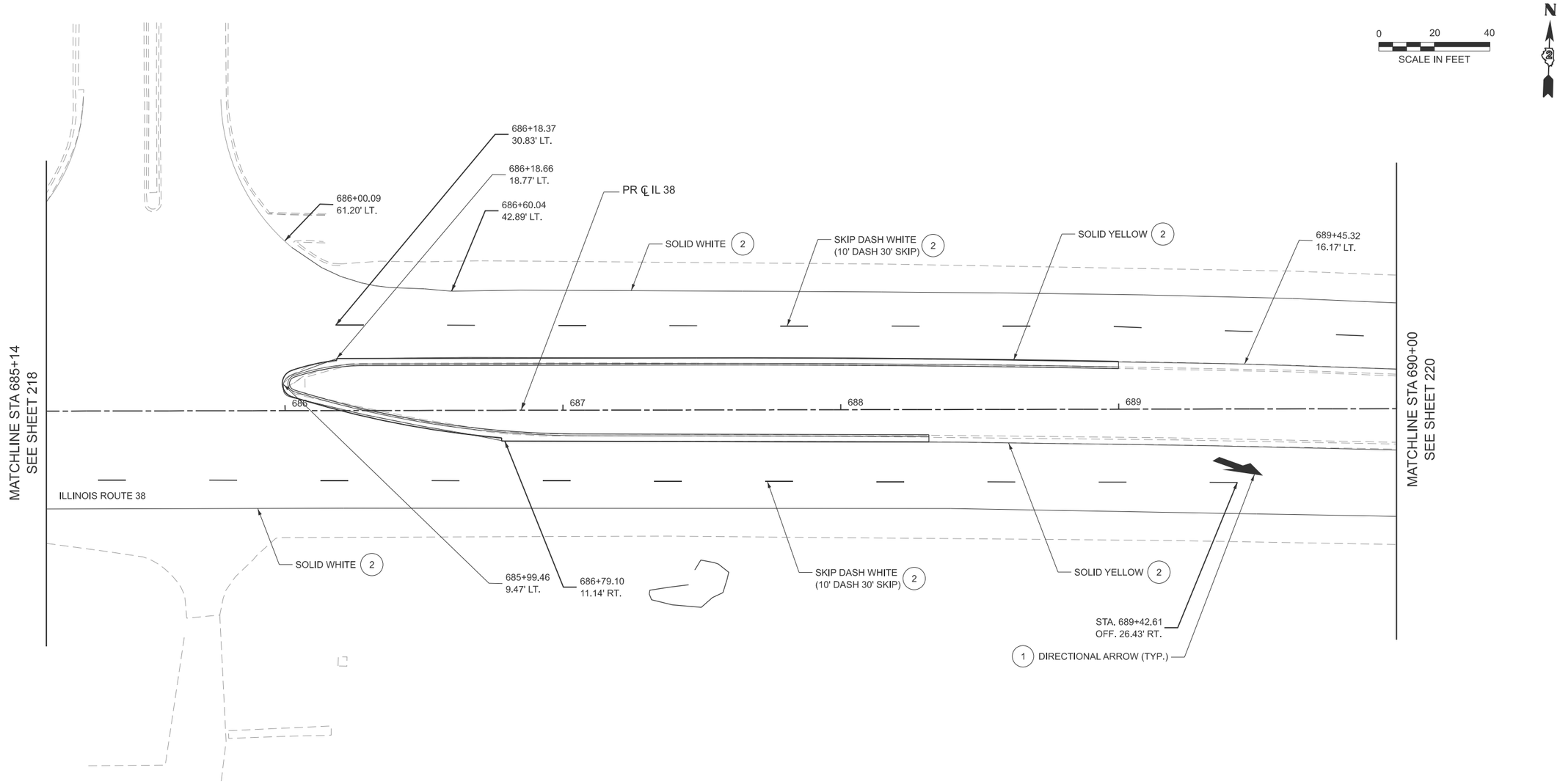

NOTES:

1. THE CONTRACTOR SHALL NOTIFY TRAFFIC OPERATIONS A MINIMUM OF 5 WORKING DAYS PRIOR TO PLACING PERMANENT PAVEMENT MARKINGS.

LEGEND

1. MOD URETH LTR & SYM WITH GRV RCSD PVT MRKG
2. PREF PL PM TD LN 7" WITH CONTRAST WITH GRV RCSD PVT MRKG 8"
3. PREF PL PM TD L 9" WITH CONTRAST WITH GRV RCSD PVT MRKG 10"
4. PREF PL PM TD L 11" WITH CONTRAST WITH GRV RCSD PVT MRKG 12"
5. PREF PL PM TD L 12" WITH GRV RCSD PVT MRKG 13"
6. PREF PL PM TD L 24" WITH GRV RCSD PVT MRKG 25"
7. MOD URETH PM LINE 4" WITH GRV RCSD PVT MRKG 5"
8. MOD URETH PM LINE 8" WITH GRV RCSD PVT MRKG 9"
9. MOD URETH PM LINE 12" WITH GRV RCSD PVT MRKG 13"

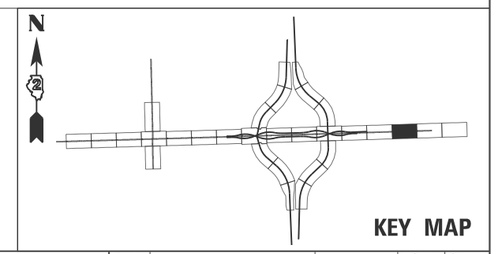

MODEL: SHT_PLAN
FILE NAME: C:\Bentley\CONNECT10.11\Organization-Civil\IDOT_Standards\Civil\IDOT_Sheets.cel

HBM ENGINEERING GROUP, LLC

USER NAME =	DESIGNED - KAO	REVISED -	
	DRAWN - KAO	REVISED -	
	CHECKED - AMI	REVISED -	
PLOT DATE = 2/6/2025	DATE - 2/6/2025	REVISED -	

STATE OF ILLINOIS
DEPARTMENT OF TRANSPORTATION

PROPOSED PAVEMENT MARKING PLAN
IL 38

SCALE: | SHEET 21 OF 30 SHEETS | STA. 685+14 TO STA. 690+00

F.A.* RTE.	SECTION	COUNTY	TOTAL SHEETS	SHEET NO.
*	141-1HBR-3 & (9,10) R-3	OGLE	508	219
		CONTRACT NO. 64N98		
	ILLINOIS	FED. AID PROJECT		

*FAI ROUTE 39 (I-39) & FAP 567 (IL 38)

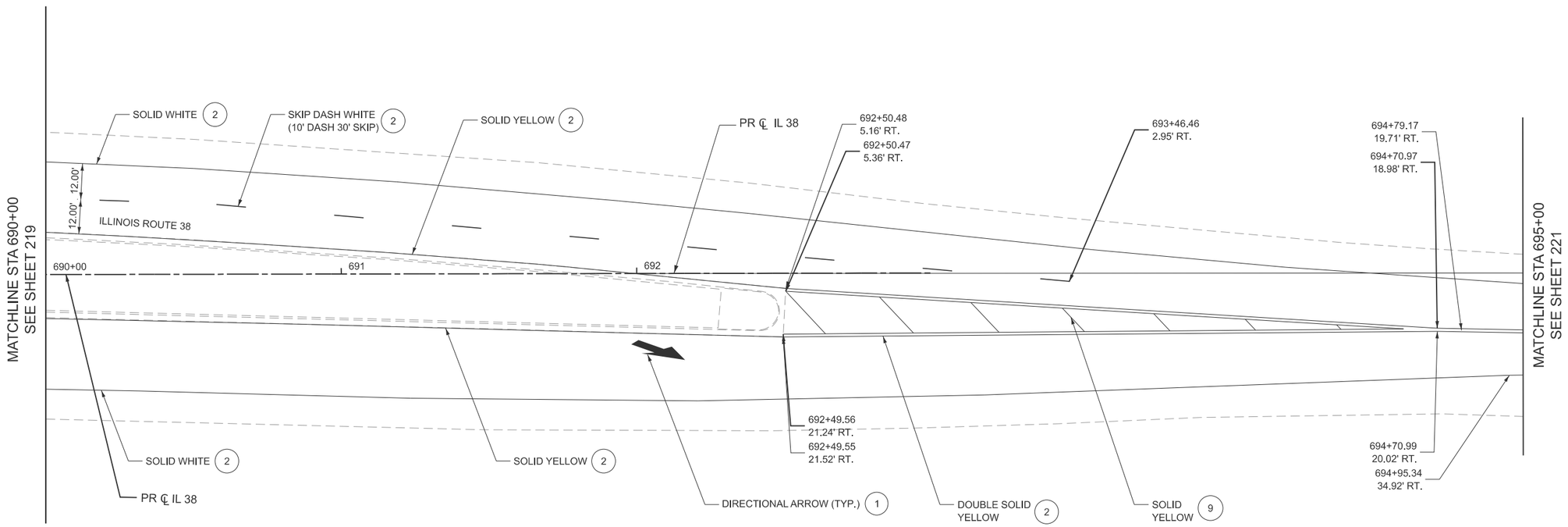

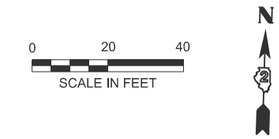

NOTES:

1. THE CONTRACTOR SHALL NOTIFY TRAFFIC OPERATIONS A MINIMUM OF 5 WORKING DAYS PRIOR TO PLACING PERMANENT PAVEMENT MARKINGS.

LEGEND

1. MOD URETH LTR & SYM WITH GRV RCSD PVT MRKG
2. PREF PL PM TD LN 7" WITH CONTRAST WITH GRV RCSD PVT MRKG 8"
3. PREF PL PM TD L 9" WITH CONTRAST WITH GRV RCSD PVT MRKG 10"
4. PREF PL PM TD L 11" WITH CONTRAST WITH GRV RCSD PVT MRKG 12"
5. PREF PL PM TD L 12" WITH GRV RCSD PVT MRKG 13"
6. PREF PL PM TD L 24" WITH GRV RCSD PVT MRKG 25"
7. MOD URETH PM LINE 4" WITH GRV RCSD PVT MRKG 5"
8. MOD URETH PM LINE 8" WITH GRV RCSD PVT MRKG 9"
9. MOD URETH PM LINE 12" WITH GRV RCSD PVT MRKG 13"

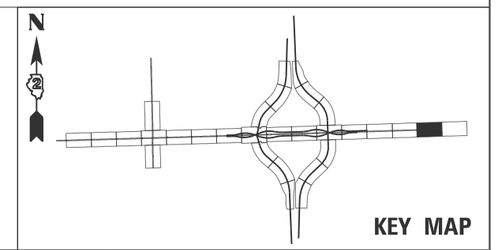

MODEL: SHT_PLAN
FILE NAME: C:\Bentley\CONNECT10.11\Organization-Civil\IDOT_Standards\Civil\IDOT_Sheets.cel

HBM ENGINEERING GROUP, LLC

USER NAME =	DESIGNED - KAO	REVISED -	
	DRAWN - KAO	REVISED -	
	CHECKED - AMI	REVISED -	
PLOT DATE = 2/6/2025	DATE - 2/6/2025	REVISED -	

STATE OF ILLINOIS
DEPARTMENT OF TRANSPORTATION

PROPOSED PAVEMENT MARKING PLAN
IL 38

SCALE: | SHEET 22 OF 30 SHEETS | STA. 690+00 TO STA. 695+00

F.A.* RTE.	SECTION	COUNTY	TOTAL SHEETS	SHEET NO.
*	141-1HBR-3 & (9,10) R-3	OGLE	508	220
		CONTRACT NO. 64N98		
	ILLINOIS	FED. AID PROJECT		

*FAI ROUTE 39 (I-39) & FAP 567 (IL 38)

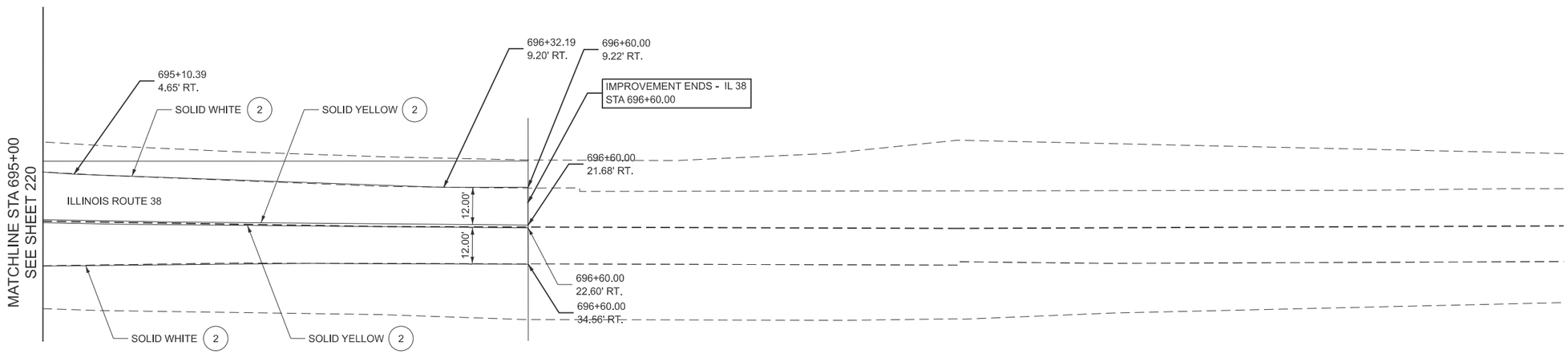

0 20 40
SCALE IN FEET

N

NOTES:
1. THE CONTRACTOR SHALL NOTIFY TRAFFIC OPERATIONS A MINIMUM OF 5 WORKING DAYS PRIOR TO PLACING PERMANENT PAVEMENT MARKINGS.

LEGEND

1. MOD URETH LTR & SYM WITH GRV RCSD PVT MRKG
2. PREF PL PM TD LN 7" WITH CONTRAST WITH GRV RCSD PVT MRKG 8"
3. PREF PL PM TD L 9" WITH CONTRAST WITH GRV RCSD PVT MRKG 10"
4. PREF PL PM TD L 11" WITH CONTRAST WITH GRV RCSD PVT MRKG 12"
5. PREF PL PM TD L 12" WITH GRV RCSD PVT MRKG 13"
6. PREF PL PM TD L 24" WITH GRV RCSD PVT MRKG 25"
7. MOD URETH PM LINE 4" WITH GRV RCSD PVT MRKG 5"
8. MOD URETH PM LINE 8" WITH GRV RCSD PVT MRKG 9"
9. MOD URETH PM LINE 12" WITH GRV RCSD PVT MRKG 13"

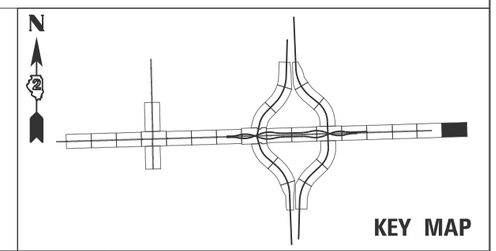

KEY MAP

MODEL: SHT_PLAN
FILE NAME: C:\Bentley\CONNECT10\11\Organization-Civil\IDOT_Standards\CadIDOT_Sheets.cel

HBM ENGINEERING GROUP, LLC

USER NAME =	DESIGNED - KAO	REVISED -	
	DRAWN - KAO	REVISED -	
	CHECKED - AMI	REVISED -	
PLOT DATE = 2/6/2025	DATE - 2/6/2025	REVISED -	

STATE OF ILLINOIS
DEPARTMENT OF TRANSPORTATION

PROPOSED PAVEMENT MARKING PLAN
IL 38

SCALE: SHEET 23 OF 30 SHEETS STA. 695+00 TO STA.

F.A.* RTE.	SECTION	COUNTY	TOTAL SHEETS	SHEET NO.
*	141-1HBR-3 & (9,10) R-3	OGLE	508	221
		CONTRACT NO. 64N98		
	ILLINOIS	FED. AID PROJECT		

*FAI ROUTE 39 (I-39) & FAP 567 (IL 38)

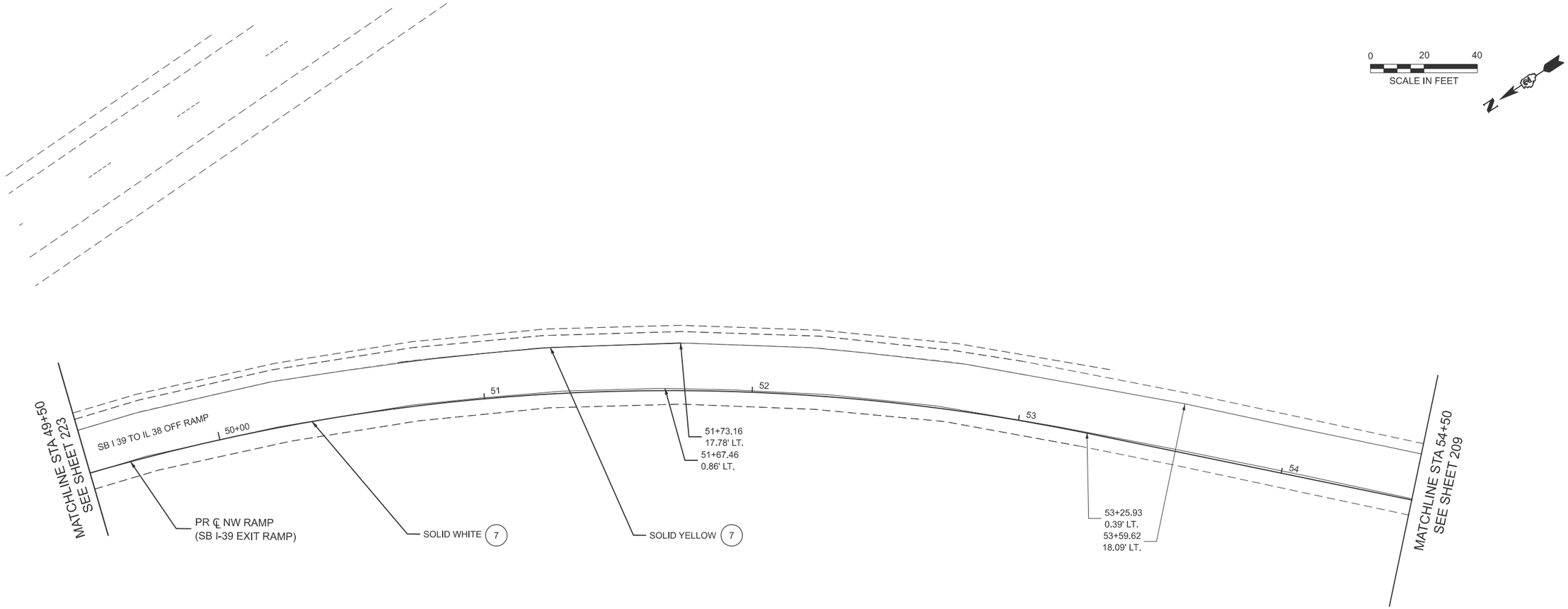

NOTES:

1. THE CONTRACTOR SHALL NOTIFY TRAFFIC OPERATIONS A MINIMUM OF 5 WORKING DAYS PRIOR TO PLACING PERMANENT PAVEMENT MARKINGS.

LEGEND

1. MOD URETH LTR & SYM WITH GRV RCSD PVT MRKG
2. PREF PL PM TD LN 7" WITH CONTRAST WITH GRV RCSD PVT MRKG 8"
3. PREF PL PM TD L 9" WITH CONTRAST WITH GRV RCSD PVT MRKG 10"
4. PREF PL PM TD L 11" WITH CONTRAST WITH GRV RCSD PVT MRKG 12"
5. PREF PL PM TD L 12" WITH GRV RCSD PVT MRKG 13"
6. PREF PL PM TD L 24" WITH GRV RCSD PVT MRKG 25"
7. MOD URETH PM LINE 4" WITH GRV RCSD PVT MRKG 5"
8. MOD URETH PM LINE 8" WITH GRV RCSD PVT MRKG 9"
9. MOD URETH PM LINE 12" WITH GRV RCSD PVT MRKG 13"

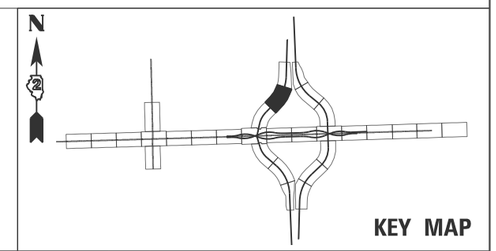

KEY MAP

MODEL: SHT_PLAN
FILE NAME: C:\Bentley\CONNECT10\11\Organization~Civil\IDOT_Standards\CellIDOT_Sheets.cel

HBM ENGINEERING GROUP, LLC

USER NAME =	DESIGNED - KAO	REVISED -	
	DRAWN - KAO	REVISED -	
	CHECKED - AMI	REVISED -	
PLOT DATE = 2/6/2025	DATE - 2/6/2025	REVISED -	

STATE OF ILLINOIS
DEPARTMENT OF TRANSPORTATION

PROPOSED PAVEMENT MARKING PLAN
I-39 SB EXIT RAMP

SCALE: | SHEET 24 OF 30 SHEETS | STA. 49+50 | TO STA. 54+50

F.A.* RTE.	SECTION	COUNTY	TOTAL SHEETS	SHEET NO.
*	141-1HBR-3 & (9,10) R-3	OGLE	508	222
		CONTRACT NO. 64N98		
		ILLINOIS	FED. AID PROJECT	

*FAI ROUTE 39 (I-39) & FAP 567 (IL 38)

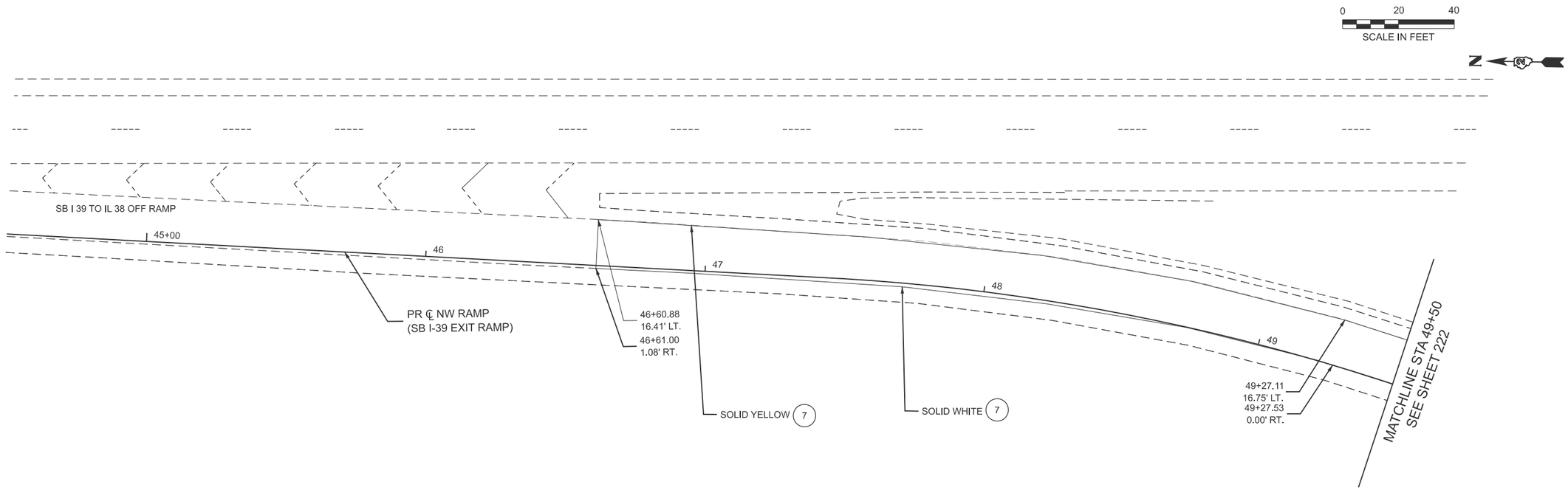

NOTES:

1. THE CONTRACTOR SHALL NOTIFY TRAFFIC OPERATIONS A MINIMUM OF 5 WORKING DAYS PRIOR TO PLACING PERMANENT PAVEMENT MARKINGS.

LEGEND

1. MOD URETH LTR & SYM WITH GRV RCSD PVT MRKG
2. PREF PL PM TD LN 7" WITH CONTRAST WITH GRV RCSD PVT MRKG 8"
3. PREF PL PM TD L 9" WITH CONTRAST WITH GRV RCSD PVT MRKG 10"
4. PREF PL PM TD L 11" WITH CONTRAST WITH GRV RCSD PVT MRKG 12"
5. PREF PL PM TD L 12" WITH GRV RCSD PVT MRKG 13"
6. PREF PL PM TD L 24" WITH GRV RCSD PVT MRKG 25"
7. MOD URETH PM LINE 4" WITH GRV RCSD PVT MRKG 5"
8. MOD URETH PM LINE 8" WITH GRV RCSD PVT MRKG 9"
9. MOD URETH PM LINE 12" WITH GRV RCSD PVT MRKG 13"

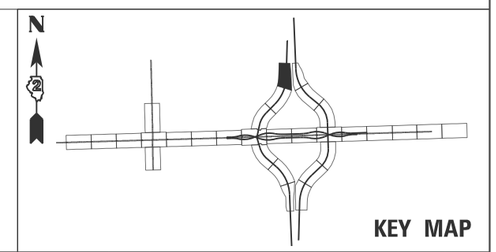

MODEL: SHT_PLAN
FILE NAME: C:\Bentley\CONNECT10\1\Organization-Civil\IDOT_Standards\CivilIDOT_Sheets.cel

HBM ENGINEERING GROUP, LLC

USER NAME =	DESIGNED - KAO	REVISED -	
	DRAWN - KAO	REVISED -	
	CHECKED - AMI	REVISED -	
PLOT DATE = 2/6/2025	DATE - 2/6/2025	REVISED -	

STATE OF ILLINOIS
DEPARTMENT OF TRANSPORTATION

PROPOSED PAVEMENT MARKING PLAN
I-39 SB EXIT RAMP

SCALE: | SHEET 25 OF 30 SHEETS | STA. 44+50 TO STA. 49+50

F.A.* RTE.	SECTION	COUNTY	TOTAL SHEETS	SHEET NO.
*	141-1HBR-3 & (9,10) R-3	OGLE	508	223
		CONTRACT NO. 64N98		
	ILLINOIS	FED. AID PROJECT		

*FAI ROUTE 39 (I-39) & FAP 567 (IL 38)

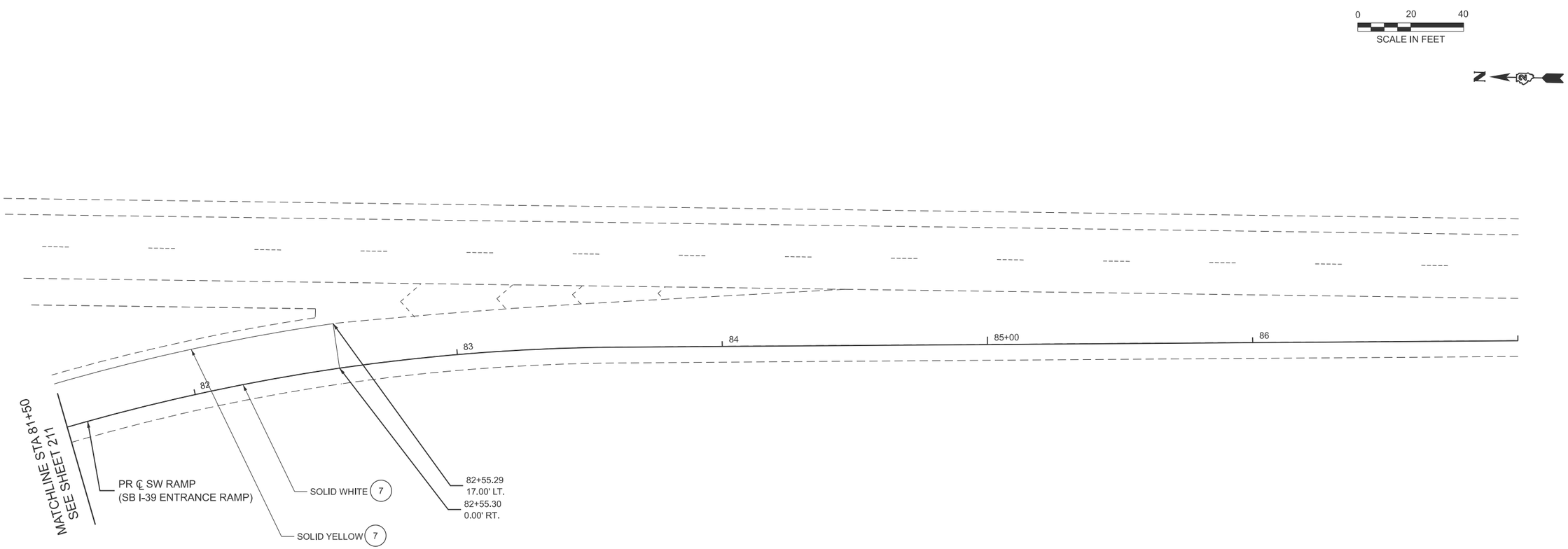

NOTES:

1. THE CONTRACTOR SHALL NOTIFY TRAFFIC OPERATIONS A MINIMUM OF 5 WORKING DAYS PRIOR TO PLACING PERMANENT PAVEMENT MARKINGS.

LEGEND

1. MOD URETH LTR & SYM WITH GRV RCSD PVT MRKG
2. PREF PL PM TD LN 7" WITH CONTRAST WITH GRV RCSD PVT MRKG 8"
3. PREF PL PM TD L 9" WITH CONTRAST WITH GRV RCSD PVT MRKG 10"
4. PREF PL PM TD L 11" WITH CONTRAST WITH GRV RCSD PVT MRKG 12"
5. PREF PL PM TD L 12" WITH GRV RCSD PVT MRKG 13"
6. PREF PL PM TD L 24" WITH GRV RCSD PVT MRKG 25"
7. MOD URETH PM LINE 4" WITH GRV RCSD PVT MRKG 5"
8. MOD URETH PM LINE 8" WITH GRV RCSD PVT MRKG 9"
9. MOD URETH PM LINE 12" WITH GRV RCSD PVT MRKG 13"

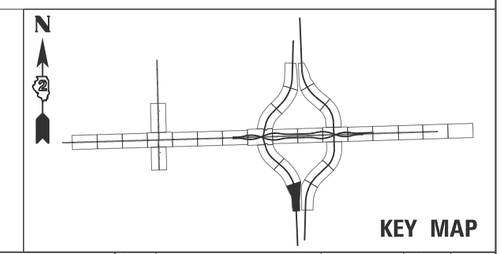

HBM ENGINEERING GROUP, LLC

USER NAME =	DESIGNED - KAO	REVISED -	
	DRAWN - KAO	REVISED -	
	CHECKED - AMI	REVISED -	
PLOT DATE = 2/6/2025	DATE - 2/6/2025	REVISED -	

STATE OF ILLINOIS
DEPARTMENT OF TRANSPORTATION

PROPOSED PAVEMENT MARKING PLAN
I-39 SB ENTRANCE RAMP

SCALE: | SHEET 26 OF 30 SHEETS | STA. 81+50 TO STA. 87+00

F.A.* RTE.	SECTION	COUNTY	TOTAL SHEETS	SHEET NO.
*	141-1HBR-3 & (9,10) R-3	OGLE	508	224
		CONTRACT NO. 64N98		
		ILLINOIS	FED. AID PROJECT	

*FAI ROUTE 39 (I-39) & FAP 567 (IL 38)

MODEL: SHT_PLAN
FILE NAME: C:\Bentley\CONNECT10111\Organization-Civil\IDOT_Standards\Cell\IDOT_Sheets.cel

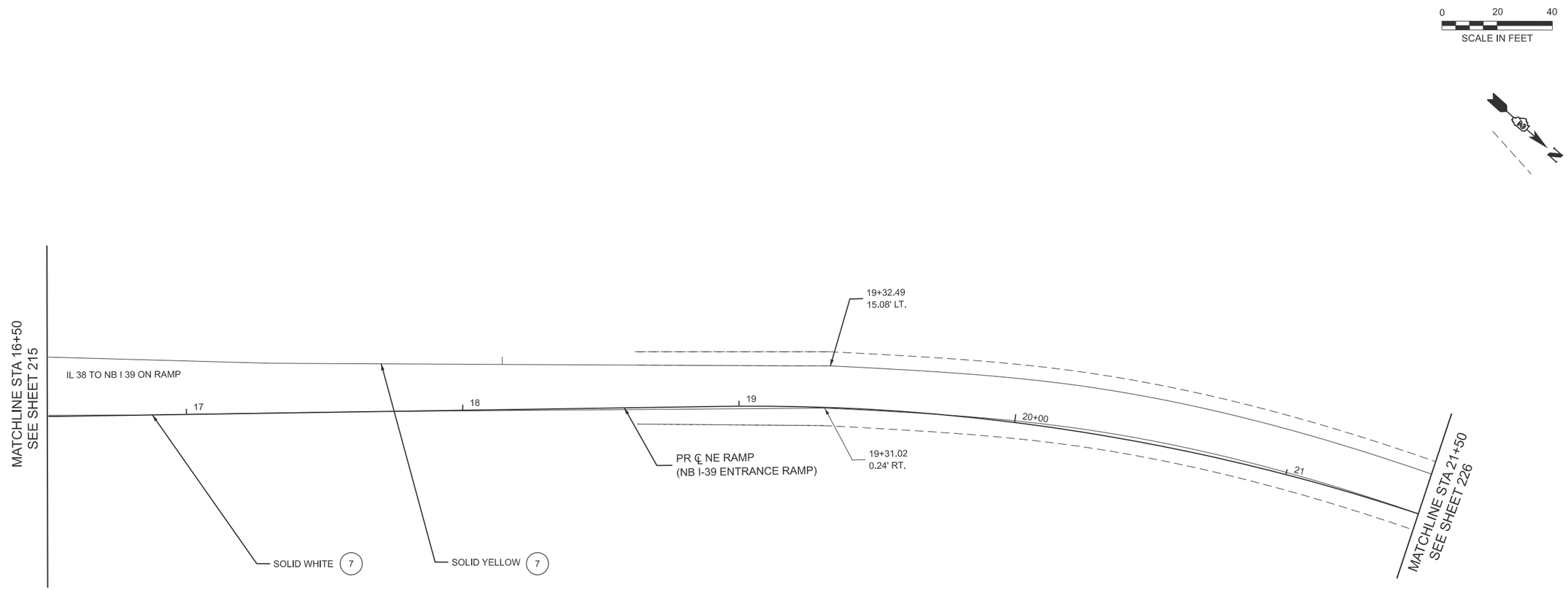

NOTES:

1. THE CONTRACTOR SHALL NOTIFY TRAFFIC OPERATIONS A MINIMUM OF 5 WORKING DAYS PRIOR TO PLACING PERMANENT PAVEMENT MARKINGS.

LEGEND

1. MOD URETH LTR & SYM WITH GRV RCSD PVT MRKG
2. PREF PL PM TD LN 7" WITH CONTRAST WITH GRV RCSD PVT MRKG 8"
3. PREF PL PM TD L 9" WITH CONTRAST WITH GRV RCSD PVT MRKG 10"
4. PREF PL PM TD L 11" WITH CONTRAST WITH GRV RCSD PVT MRKG 12"
5. PREF PL PM TD L 12" WITH GRV RCSD PVT MRKG 13"
6. PREF PL PM TD L 24" WITH GRV RCSD PVT MRKG 25"
7. MOD URETH PM LINE 4" WITH GRV RCSD PVT MRKG 5"
8. MOD URETH PM LINE 8" WITH GRV RCSD PVT MRKG 9"
9. MOD URETH PM LINE 12" WITH GRV RCSD PVT MRKG 13"

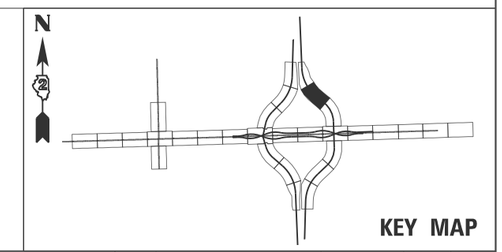

MODEL: SHT_PLAN
FILE NAME: C:\Bentley\CONNECT1011\Organization-Civil\IDOT_Standards\Civil\IDOT_Sheets.cel

HBM ENGINEERING GROUP, LLC

USER NAME =	DESIGNED - KAO	REVISED -	
	DRAWN - KAO	REVISED -	
	CHECKED - AMI	REVISED -	
PLOT DATE = 2/6/2025	DATE - 2/6/2025	REVISED -	

STATE OF ILLINOIS
DEPARTMENT OF TRANSPORTATION

PROPOSED PAVEMENT MARKING PLAN
I-39 NB EXIT RAMP

SCALE: | SHEET 27 OF 30 SHEETS | STA. 16+50 TO STA. 21+50

F.A.* RTE.	SECTION	COUNTY	TOTAL SHEETS	SHEET NO.
*	141-1HBR-3 & (9,10) R-3	OGLE	508	225
		CONTRACT NO. 64N98		
	ILLINOIS	FED. AID PROJECT		

*FAI ROUTE 39 (I-39) & FAP 567 (IL 38)

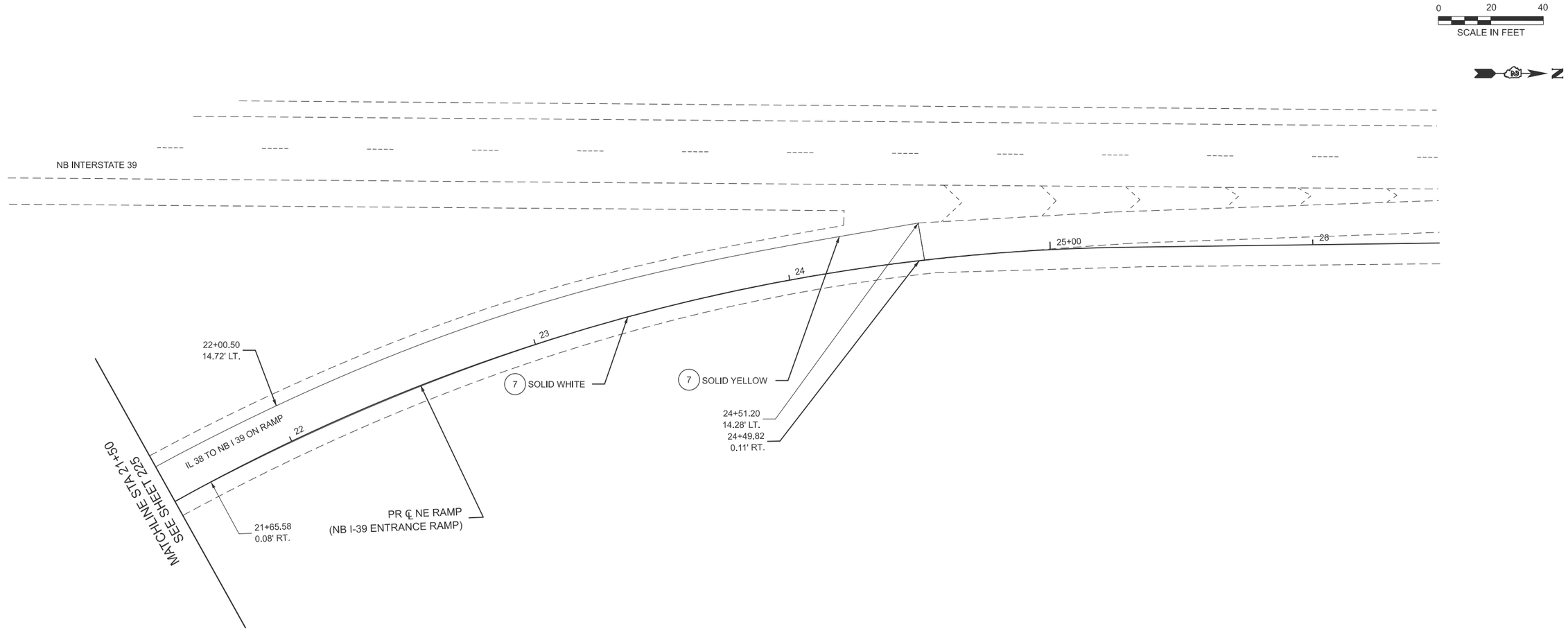

NOTES:

1. THE CONTRACTOR SHALL NOTIFY TRAFFIC OPERATIONS A MINIMUM OF 5 WORKING DAYS PRIOR TO PLACING PERMANENT PAVEMENT MARKINGS.

LEGEND

1. MOD URETH LTR & SYM WITH GRV RCSD PVT MRKG
2. PREF PL PM TD LN 7" WITH CONTRAST WITH GRV RCSD PVT MRKG 8"
3. PREF PL PM TD L 9" WITH CONTRAST WITH GRV RCSD PVT MRKG 10"
4. PREF PL PM TD L 11" WITH CONTRAST WITH GRV RCSD PVT MRKG 12"
5. PREF PL PM TD L 12" WITH GRV RCSD PVT MRKG 13"
6. PREF PL PM TD L 24" WITH GRV RCSD PVT MRKG 25"
7. MOD URETH PM LINE 4" WITH GRV RCSD PVT MRKG 5"
8. MOD URETH PM LINE 8" WITH GRV RCSD PVT MRKG 9"
9. MOD URETH PM LINE 12" WITH GRV RCSD PVT MRKG 13"

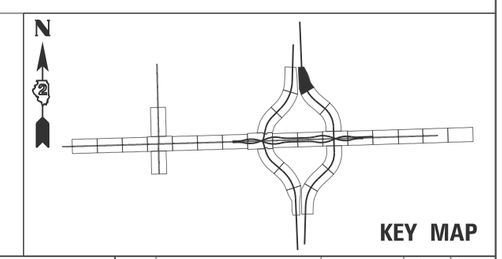

KEY MAP

MODEL: SHT_PLAN
FILE NAME: C:\Bentley\CONNECT10.11\Organization-Civil\IDOT_Standards\Civil\IDOT_Sheets.cel

HBM ENGINEERING GROUP, LLC

USER NAME =	DESIGNED - KAO	REVISED -	
	DRAWN - KAO	REVISED -	
	CHECKED - AMI	REVISED -	
PLOT DATE = 2/6/2025	DATE - 2/6/2025	REVISED -	

STATE OF ILLINOIS
DEPARTMENT OF TRANSPORTATION

PROPOSED PAVEMENT MARKING PLAN
I-39 NB EXIT RAMP

SCALE: | SHEET 28 OF 30 SHEETS | STA. 21+50 TO STA. 26+45

F.A.* RTE.	SECTION	COUNTY	TOTAL SHEETS	SHEET NO.
*	141-1HBR-3 & (9,10) R-3	OGLE	508	226
		CONTRACT NO. 64N98		
		ILLINOIS	FED. AID PROJECT	

*FAI ROUTE 39 (I-39) & FAP 567 (IL 38)

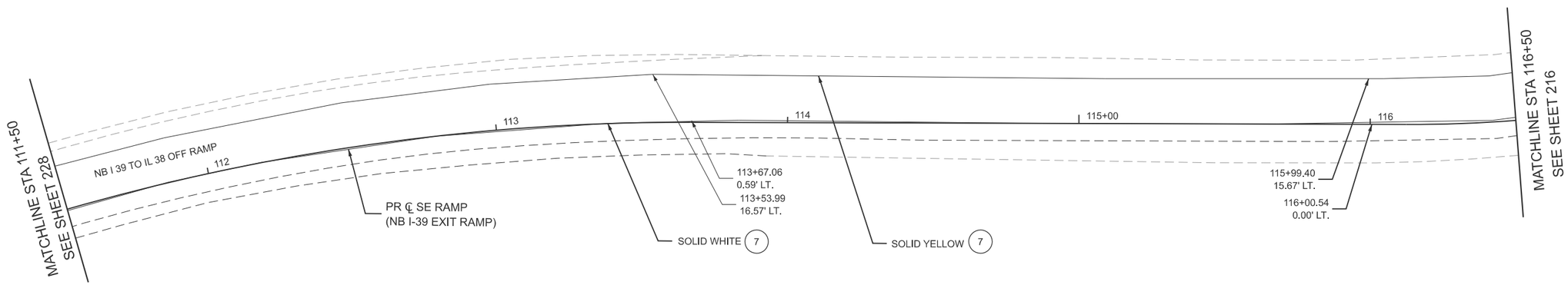

NOTES:

1. THE CONTRACTOR SHALL NOTIFY TRAFFIC OPERATIONS A MINIMUM OF 5 WORKING DAYS PRIOR TO PLACING PERMANENT PAVEMENT MARKINGS.

LEGEND

1. MOD URETH LTR & SYM WITH GRV RCSD PVT MRKG
2. PREF PL PM TD LN 7" WITH CONTRAST WITH GRV RCSD PVT MRKG 8"
3. PREF PL PM TD L 9" WITH CONTRAST WITH GRV RCSD PVT MRKG 10"
4. PREF PL PM TD L 11" WITH CONTRAST WITH GRV RCSD PVT MRKG 12"
5. PREF PL PM TD L 12" WITH GRV RCSD PVT MRKG 13"
6. PREF PL PM TD L 24" WITH GRV RCSD PVT MRKG 25"
7. MOD URETH PM LINE 4" WITH GRV RCSD PVT MRKG 5"
8. MOD URETH PM LINE 8" WITH GRV RCSD PVT MRKG 9"
9. MOD URETH PM LINE 12" WITH GRV RCSD PVT MRKG 13"

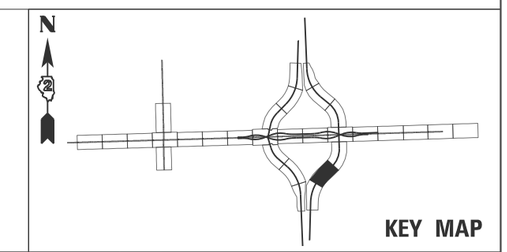

KEY MAP

MODEL: SHT_PLAN
FILE NAME: C:\Bentley\CONNECT10\1\Organization-Civil\IDOT_Standards\CivilIDOT_Sheets.cel

HBM ENGINEERING GROUP, LLC

USER NAME =	DESIGNED - KAO	REVISED -	
	DRAWN - KAO	REVISED -	
	CHECKED - AMI	REVISED -	
PLOT DATE = 2/6/2025	DATE - 2/6/2025	REVISED -	

STATE OF ILLINOIS
DEPARTMENT OF TRANSPORTATION

PROPOSED PAVEMENT MARKING PLAN
I-39 NB EXIT RAMP

SCALE: | SHEET 29 OF 30 SHEETS | STA. 111+50 TO STA. 116+50

F.A.* RTE.	SECTION	COUNTY	TOTAL SHEETS	SHEET NO.
*	141-1HBR-3 & (9,10) R-3	OGLE	508	227
		CONTRACT NO. 64N98		
		ILLINOIS	FED. AID PROJECT	

*FAI ROUTE 39 (I-39) & FAP 567 (IL 38)

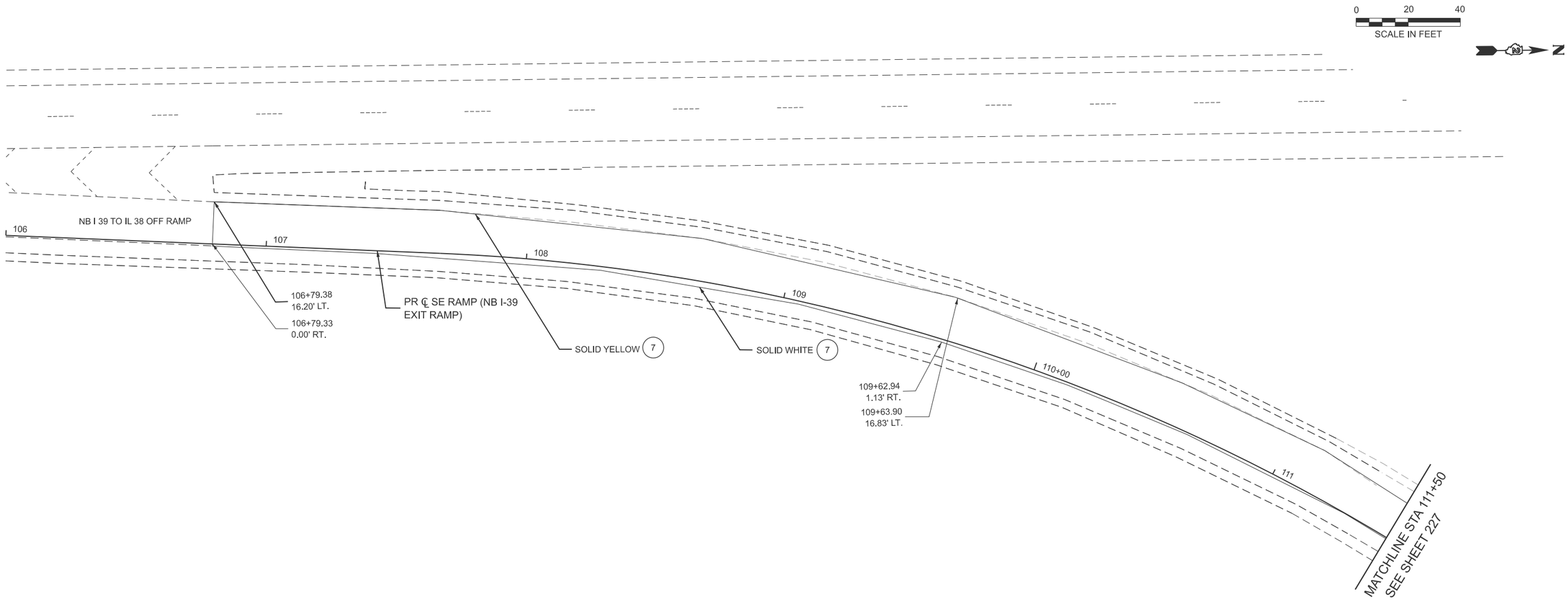

NOTES:

1. THE CONTRACTOR SHALL NOTIFY TRAFFIC OPERATIONS A MINIMUM OF 5 WORKING DAYS PRIOR TO PLACING PERMANENT PAVEMENT MARKINGS.

LEGEND

1. MOD URETH LTR & SYM WITH GRV RCSD PVT MRKG
2. PREF PL PM TD LN 7" WITH CONTRAST WITH GRV RCSD PVT MRKG 8"
3. PREF PL PM TD L 9" WITH CONTRAST WITH GRV RCSD PVT MRKG 10"
4. PREF PL PM TD L 11" WITH CONTRAST WITH GRV RCSD PVT MRKG 12"
5. PREF PL PM TD L 12" WITH GRV RCSD PVT MRKG 13"
6. PREF PL PM TD L 24" WITH GRV RCSD PVT MRKG 25"
7. MOD URETH PM LINE 4" WITH GRV RCSD PVT MRKG 5"
8. MOD URETH PM LINE 8" WITH GRV RCSD PVT MRKG 9"
9. MOD URETH PM LINE 12" WITH GRV RCSD PVT MRKG 13"

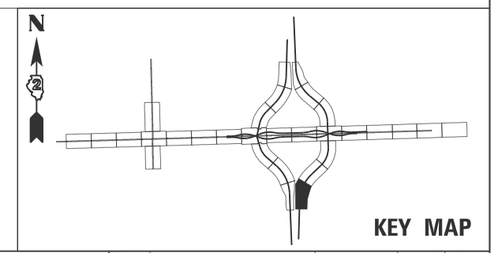

MODEL: SHT_PLAN
FILE NAME: C:\Bentley\CONNECT10111\Organization-Civil\IDOT_Standards\Cell\IDOT_Sheets.cel

HBM ENGINEERING GROUP, LLC

USER NAME =	DESIGNED - KAO	REVISED -	
	DRAWN - KAO	REVISED -	
	CHECKED - AMI	REVISED -	
PLOT DATE = 2/6/2025	DATE - 2/6/2025	REVISED -	

STATE OF ILLINOIS
DEPARTMENT OF TRANSPORTATION

PROPOSED PAVEMENT MARKING PLAN
I-39 NB EXIT RAMP

SCALE: | SHEET 30 OF 30 SHEETS | STA. 106+00 TO STA. 111+50

F.A.* RTE.	SECTION	COUNTY	TOTAL SHEETS	SHEET NO.
*	141-1HBR-3 & (9,10) R-3	OGLE	508	228
		CONTRACT NO. 64N98		
	ILLINOIS	FED. AID PROJECT		

*FAI ROUTE 39 (I-39) & FAP 567 (IL 38)

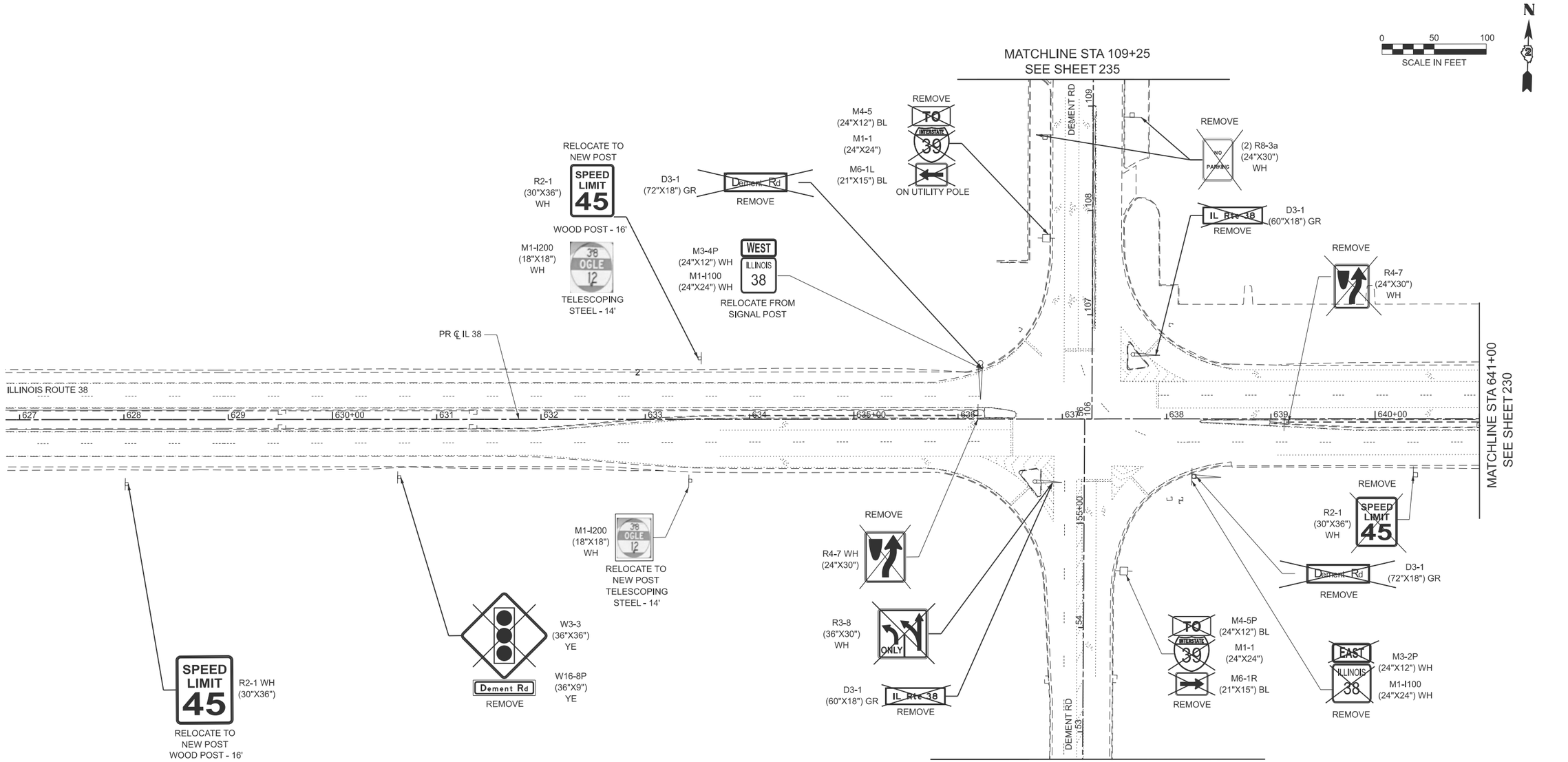

LEGEND

DO NOT ENTER — EXISTING SIGN TO REMAIN OR TO BE REMOVED AND REINSTALLED

DO NOT ENTER — EXISTING SIGN TO REMOVED

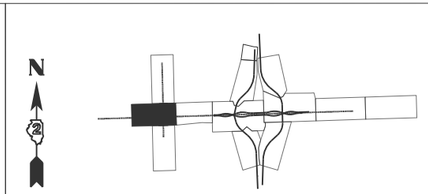

KEY MAP

MODEL: SHT_PLAN
FILE NAME: C:\Bentley\CONNECT10111\Organization-Civil\IDOT_Standards\Civil\IDOT_Sheets.cel

HBM ENGINEERING GROUP, LLC

USER NAME =	DESIGNED - KAO	REVISED -	
	DRAWN - KAO	REVISED -	
	CHECKED - AMI	REVISED -	
PLOT DATE = 2/6/2025	DATE - 2/6/2025	REVISED -	

STATE OF ILLINOIS
DEPARTMENT OF TRANSPORTATION

SIGNING REMOVAL
IL 38

SCALE: | SHEET 1 OF 15 SHEETS | STA. 629+00.00 TO STA. 641+00.00

F.A.* RTE.	SECTION	COUNTY	TOTAL SHEETS	SHEET NO.
*	141-1HBR-3 & (9,10) R-3	OGLE	508	229
		CONTRACT NO. 64N98		
	ILLINOIS	FED. AID PROJECT		

*FAI ROUTE 39 (I-39) & FAP 567 (IL 38)

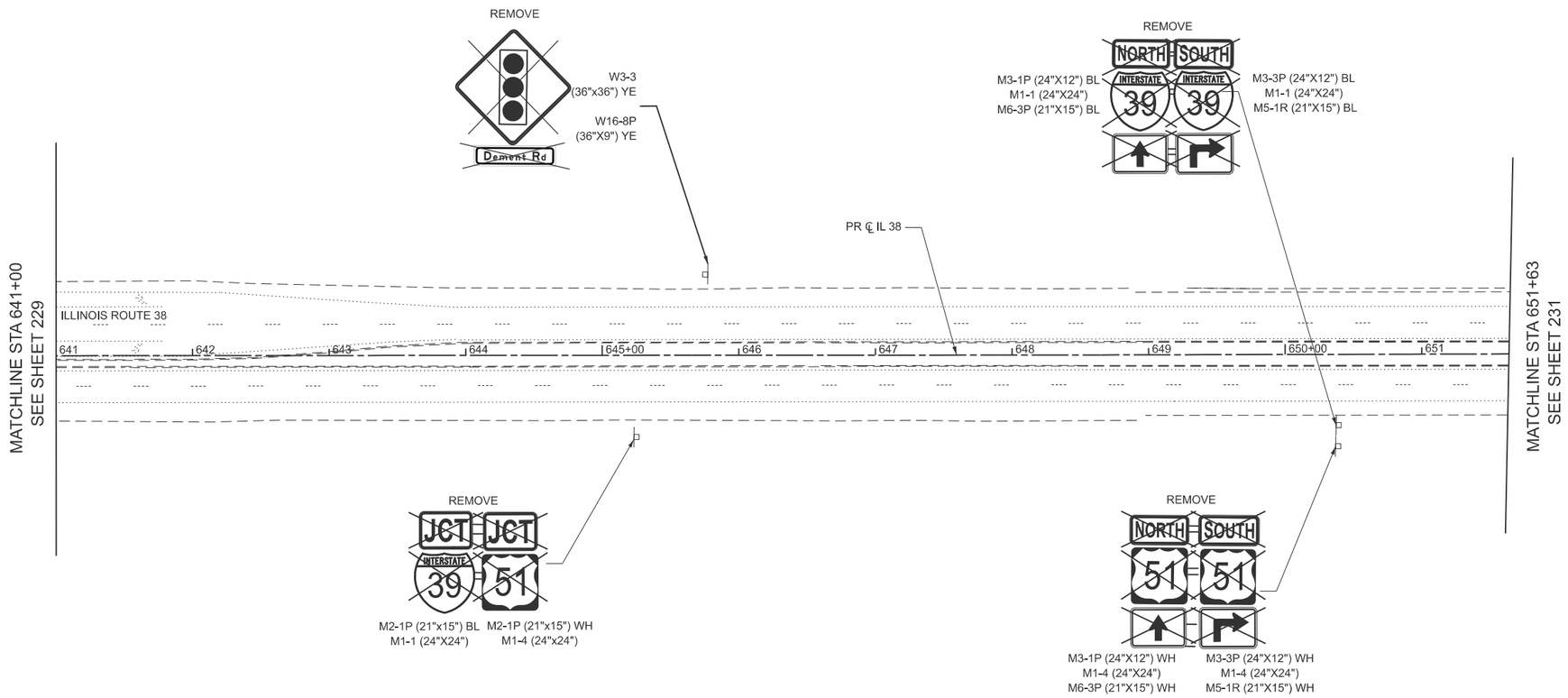

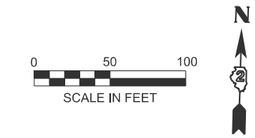

LEGEND

DO NOT ENTER — EXISTING SIGN TO REMAIN OR TO BE REMOVED AND REINSTALLED

DO NOT ENTER — EXISTING SIGN TO REMOVED

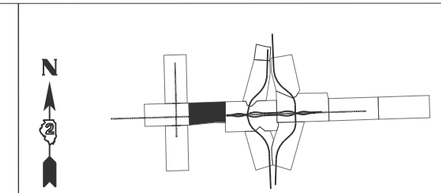

KEY MAP

MODEL: SHT_PLAN
FILE NAME: C:\Bentley\CONNECT10\1\Organization-Civil\IDOT_Standards\Cell\IDOT_Sheets.cel

HBM ENGINEERING GROUP, LLC

USER NAME =	DESIGNED - KAO	REVISED -	
	DRAWN - KAO	REVISED -	
	CHECKED - AMI	REVISED -	
PLOT DATE = 2/6/2025	DATE - 2/6/2025	REVISED -	

STATE OF ILLINOIS
DEPARTMENT OF TRANSPORTATION

SIGNING REMOVAL
IL 38

SCALE: | SHEET 2 OF 13 SHEETS | STA. 641+00.00 TO STA. 651+63.00

F.A.* RTE.	SECTION	COUNTY	TOTAL SHEETS	SHEET NO.
*	141-1HBR-3 & (9,10) R-3	OGLE	508	230
		CONTRACT NO. 64N98		
	ILLINOIS	FED. AID PROJECT		

*FAI ROUTE 39 (I-39) & FAP 567 (IL 38)

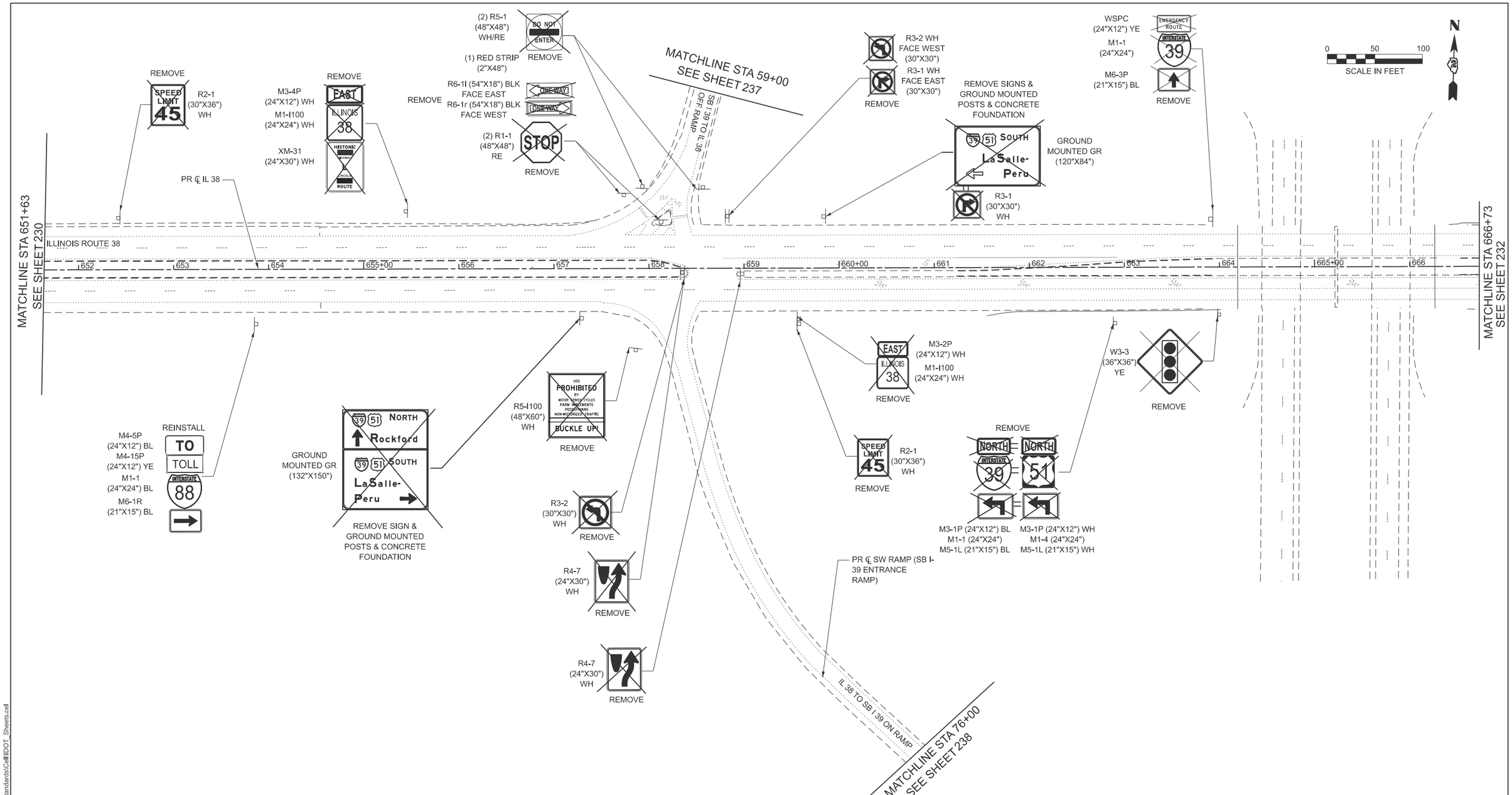

LEGEND

DO NOT ENTER — EXISTING SIGN TO REMAIN OR TO BE REMOVED AND REINSTALLED

DO NOT ENTER — EXISTING SIGN TO REMOVED

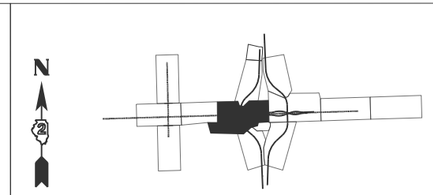

KEY MAP

MODEL: SHT_PLAN
FILE NAME: C:\Bentley\CONNECT10.11\Organization-Civil\IDOT_Standards\Civil\IDOT_Sheets.cel

HBM ENGINEERING GROUP, LLC

USER NAME =	DESIGNED - KAO	REVISED -	
	DRAWN - KAO	REVISED -	
	CHECKED - AMI	REVISED -	
PLOT DATE = 2/6/2025	DATE - 2/6/2025	REVISED -	

STATE OF ILLINOIS
DEPARTMENT OF TRANSPORTATION

SIGNING REMOVAL
IL 38 AT I-39

SCALE: | SHEET 3 OF 13 SHEETS | STA. 651+63.00 TO STA. 666+73.00

F.A.* RTE.	SECTION	COUNTY	TOTAL SHEETS	SHEET NO.
*	141-1HBR-3 & (9,10) R-3	OGLE	508	231

CONTRACT NO. 64N98

ILLINOIS | FED. AID PROJECT

*FAI ROUTE 39 (I-39) & FAP 567 (IL 38)

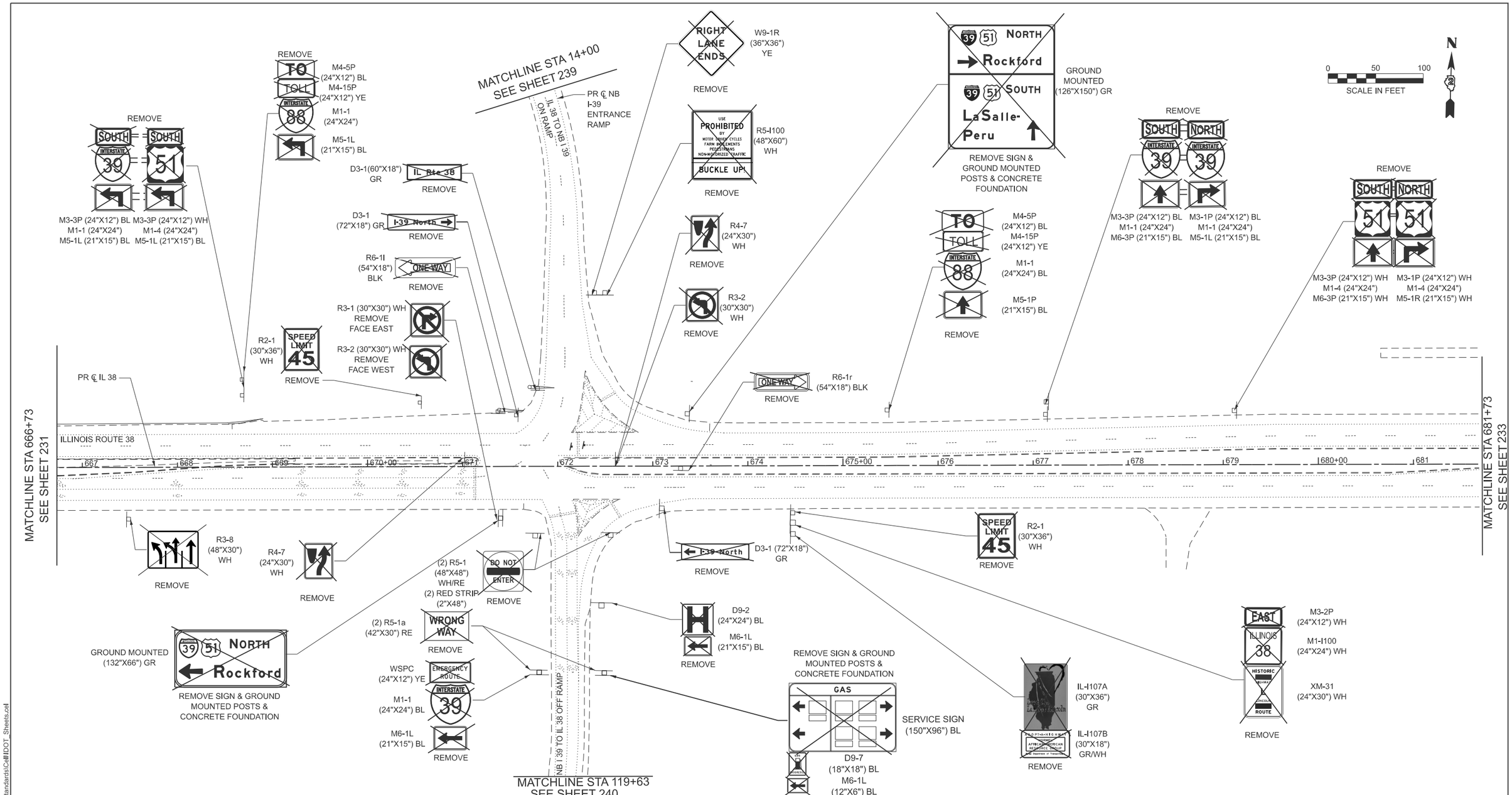

LEGEND

EXISTING SIGN TO REMAIN OR TO BE REMOVED AND REINSTALLED

EXISTING SIGN TO REMOVED

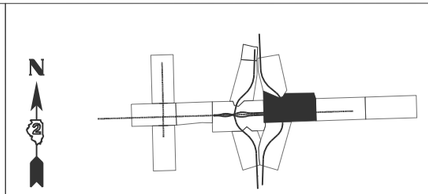

KEY MAP

MODEL: SHT_PLAN
FILE NAME: C:\Bentley\CONNECT1011\Organization-Civil\IDOT_Standards\Civil\IDOT_Sheets.cel

HBM ENGINEERING GROUP, LLC

USER NAME =	DESIGNED - KAO	REVISED -	
	DRAWN - KAO	REVISED -	
	CHECKED - AMI	REVISED -	
PLOT DATE = 2/6/2025	DATE - 2/6/2025	REVISED -	

STATE OF ILLINOIS
DEPARTMENT OF TRANSPORTATION

SIGNING REMOVAL
IL 38 AT I-39

SCALE: | SHEET 4 OF 13 SHEETS | STA. 666+73.00 TO STA. 681+73.00

F.A.* RTE.	SECTION	COUNTY	TOTAL SHEETS	SHEET NO.
*	141-1HBR-3 & (9,10) R-3	OGLE	508	232

CONTRACT NO. 64N98

ILLINOIS | FED. AID PROJECT

*FAI ROUTE 39 (I-39) & FAP 567 (IL 38)

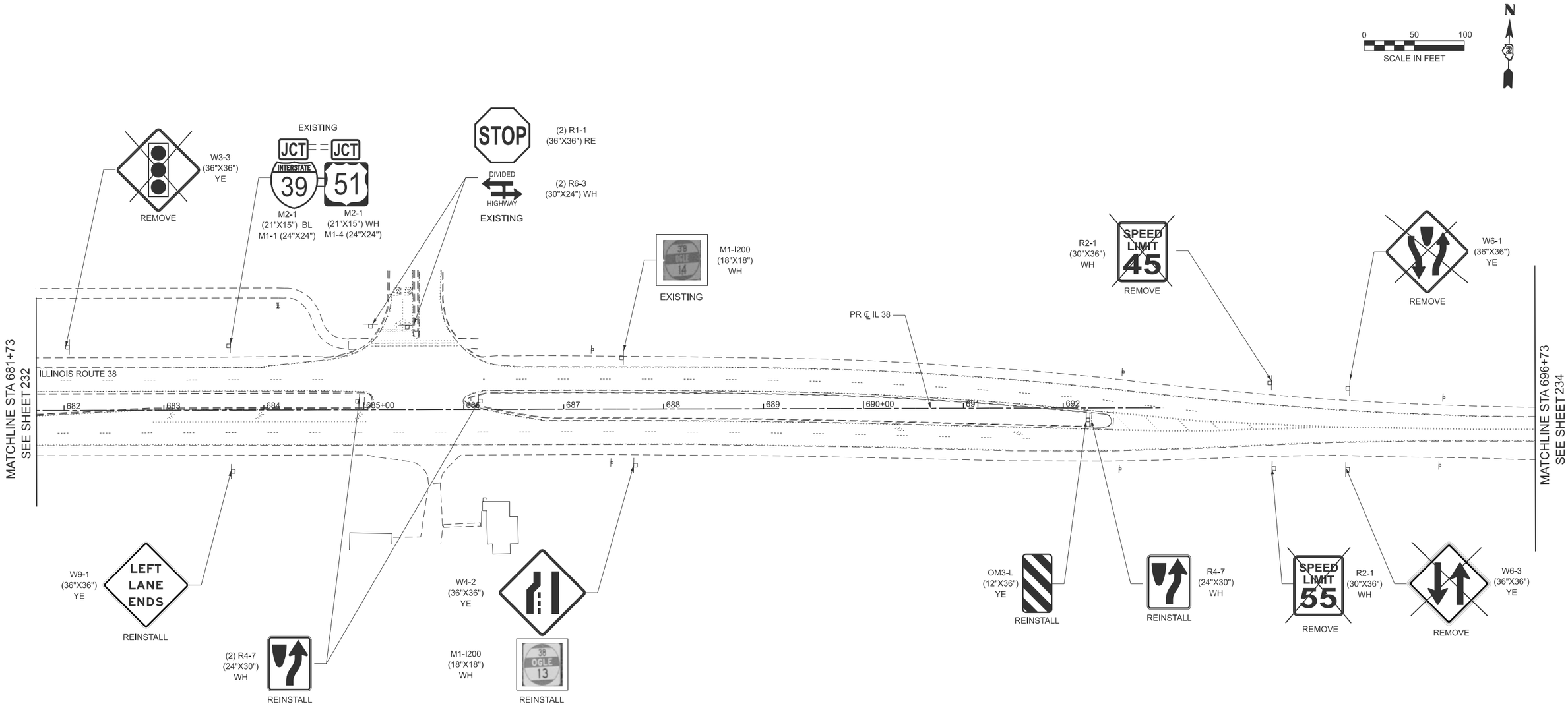

LEGEND

DO NOT ENTER — EXISTING SIGN TO REMAIN OR TO BE REMOVED AND REINSTALLED

DO NOT ENTER — EXISTING SIGN TO REMOVED

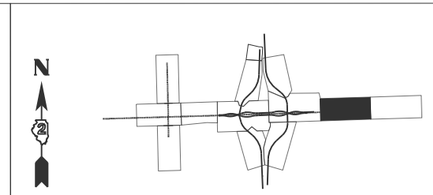

KEY MAP

MODEL: SHT_PLAN
FILE NAME: C:\Bentley\CONNECT10\11\Organization~Civil\IDOT_Standards\Cell\IDOT_Sheets.cel

HBM ENGINEERING GROUP, LLC

USER NAME =	DESIGNED - KAO	REVISED -	
	DRAWN - KAO	REVISED -	
	CHECKED - AMI	REVISED -	
PLOT DATE = 2/6/2025	DATE - 2/6/2025	REVISED -	

STATE OF ILLINOIS
DEPARTMENT OF TRANSPORTATION

SIGNING REMOVAL
IL 38

SCALE: | SHEET 5 OF 13 SHEETS | STA. 681+73.00 TO STA. 696+73.00

F.A.* RTE.	SECTION	COUNTY	TOTAL SHEETS	SHEET NO.
*	141-1HBR-3 & (9,10) R-3	OGLE	508	233
		CONTRACT NO. 64N98		
	ILLINOIS	FED. AID PROJECT		

*FAI ROUTE 39 (I-39) & FAP 567 (IL 38)

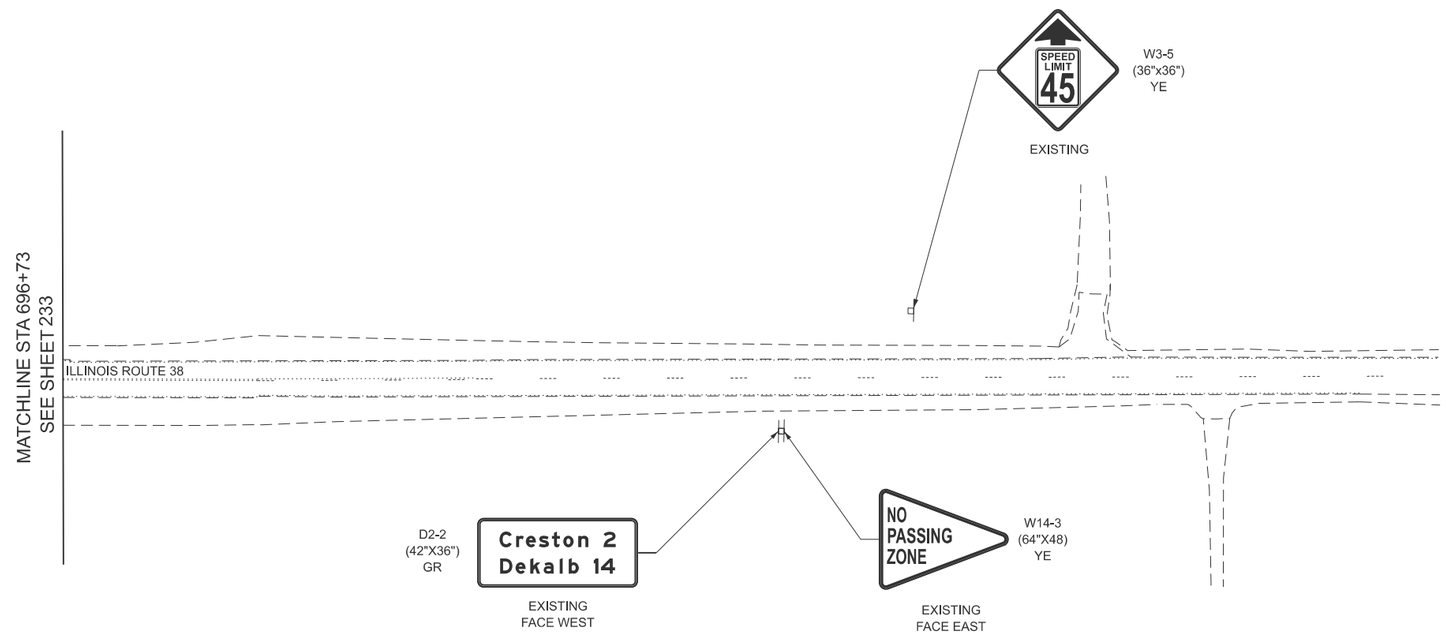

LEGEND

DO NOT ENTER — EXISTING SIGN TO REMAIN OR TO BE REMOVED AND REINSTALLED

DO NOT ENTER — EXISTING SIGN TO REMOVED

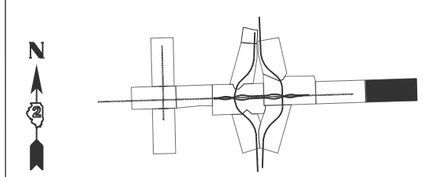

KEY MAP

MODEL: SHT_PLAN
FILE NAME: C:\Bentley\CONNECT10\11\Organization-Civil\IDOT_Standards\Cell\IDOT_Sheets.cel

HBM ENGINEERING GROUP, LLC

USER NAME =	DESIGNED - KAO	REVISED -	
	DRAWN - KAO	REVISED -	
	CHECKED - AMI	REVISED -	
PLOT DATE = 2/6/2025	DATE - 2/6/2025	REVISED -	

STATE OF ILLINOIS
DEPARTMENT OF TRANSPORTATION

SIGNING REMOVAL
IL 38

SCALE: | SHEET 6 OF 13 SHEETS | STA. 696+73.00 TO STA.

F.A.* RTE.	SECTION	COUNTY	TOTAL SHEETS	SHEET NO.
*	141-1HBR-3 & (9,10) R-3	OGLE	508	234

CONTRACT NO. 64N98

ILLINOIS | FED. AID PROJECT

*FAI ROUTE 39 (I-39) & FAP 567 (IL 38)

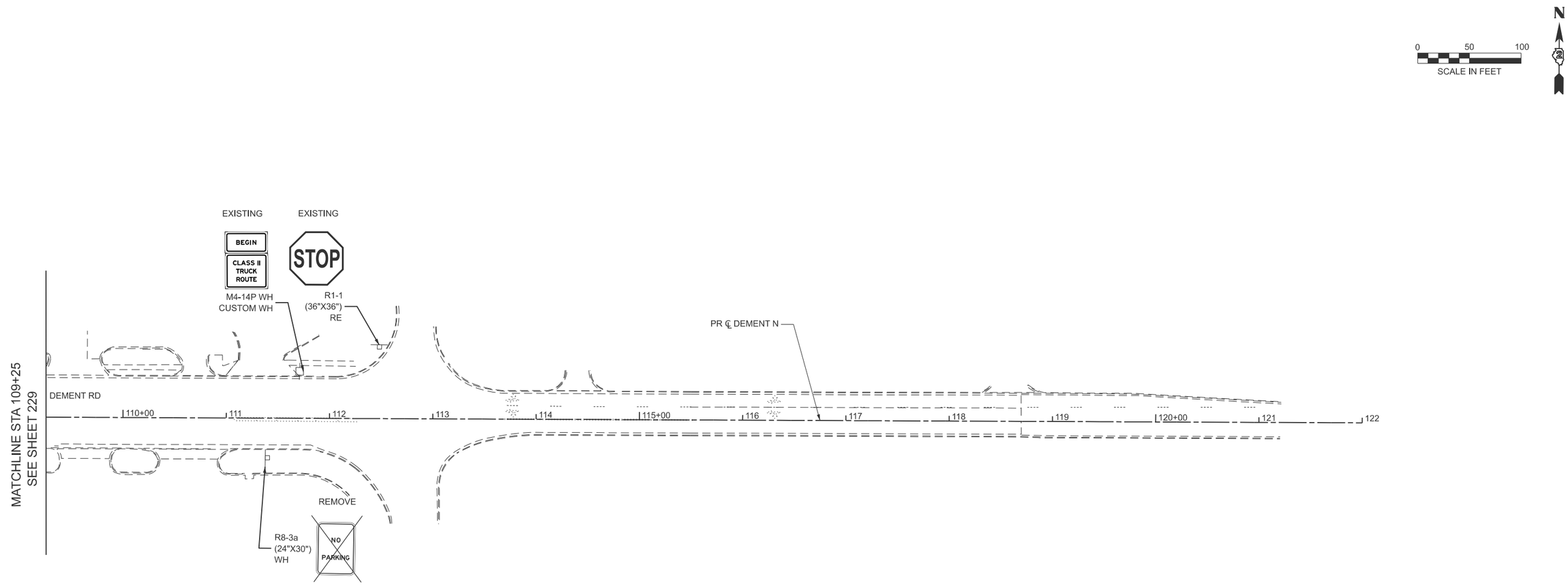

LEGEND

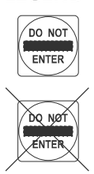

EXISTING SIGN TO REMAIN OR TO BE REMOVED AND REINSTALLED

EXISTING SIGN TO REMOVED

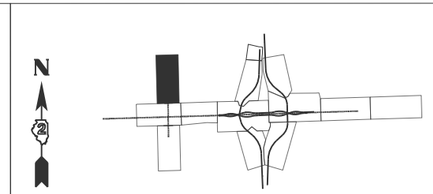

KEY MAP

MODEL: SHT_PLAN
FILE NAME: C:\Bentley\CONNECT10.11\Organization-Civil\IDOT_Standards\Cell\IDOT_Sheets.cel

HBM ENGINEERING GROUP, LLC

USER NAME =	DESIGNED - KAO	REVISED -	
	DRAWN - KAO	REVISED -	
	CHECKED - AMI	REVISED -	
PLOT DATE = 2/6/2025	DATE - 2/6/2025	REVISED -	

STATE OF ILLINOIS
DEPARTMENT OF TRANSPORTATION

SIGNING REMOVAL
DEMENT RD N OF IL 38

SCALE: | SHEET 7 OF 13 SHEETS | STA. 109+25.00 TO STA.

F.A.* RTE.	SECTION	COUNTY	TOTAL SHEETS	SHEET NO.
*	141-1HBR-3 & (9,10) R-3	OGLE	508	235
		CONTRACT NO. 64N98		
	ILLINOIS	FED. AID PROJECT		

*FAI ROUTE 39 (I-39) & FAP 567 (IL 38)

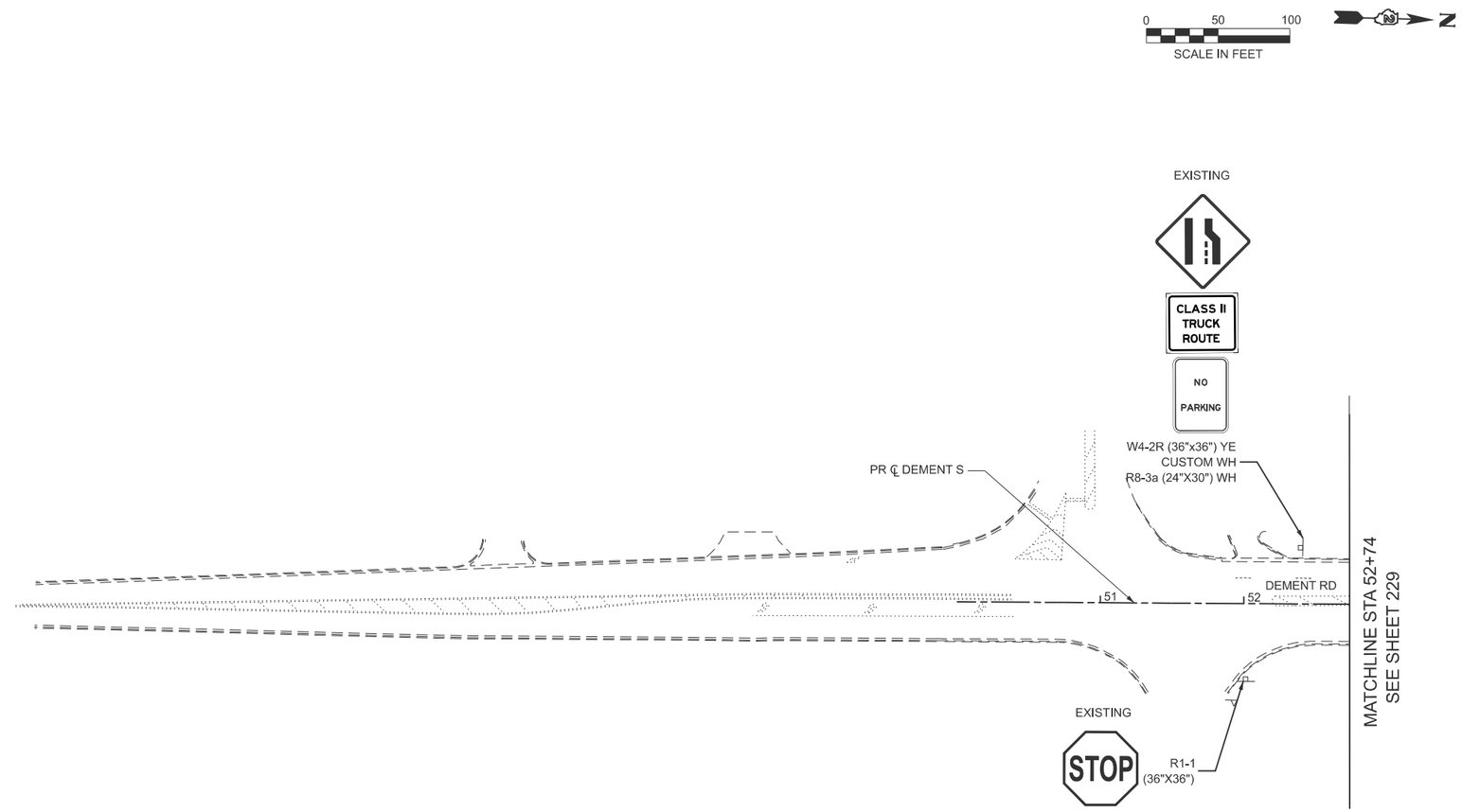

LEGEND

EXISTING SIGN TO REMAIN OR
TO BE REMOVED AND REINSTALLED

EXISTING SIGN TO REMOVED

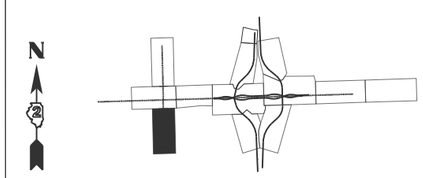

KEY MAP

MODEL: SHT_PLAN
FILE NAME: C:\Bentley\CONNECT1011\Organization-Civil\IDOT_Standards\Cell\IDOT_Sheets.cel

HBM ENGINEERING GROUP, LLC

USER NAME =	DESIGNED - KAO	REVISED -	
	DRAWN - KAO	REVISED -	
	CHECKED - AMI	REVISED -	
PLOT DATE = 2/6/2025	DATE - 2/6/2025	REVISED -	

STATE OF ILLINOIS
DEPARTMENT OF TRANSPORTATION

SIGNING REMOVAL
DEMENT RD S OF IL 38

SCALE: | SHEET 8 OF 13 SHEETS | STA. 50+00.00 | TO STA. 52+74.00

F.A.* RTE.	SECTION	COUNTY	TOTAL SHEETS	SHEET NO.
*	141-1HBR-3 & (9,10) R-3	OGLE	508	236
		CONTRACT NO. 64N98		
	ILLINOIS	FED. AID PROJECT		

*FAI ROUTE 39 (I-39) & FAP 567 (IL 38)

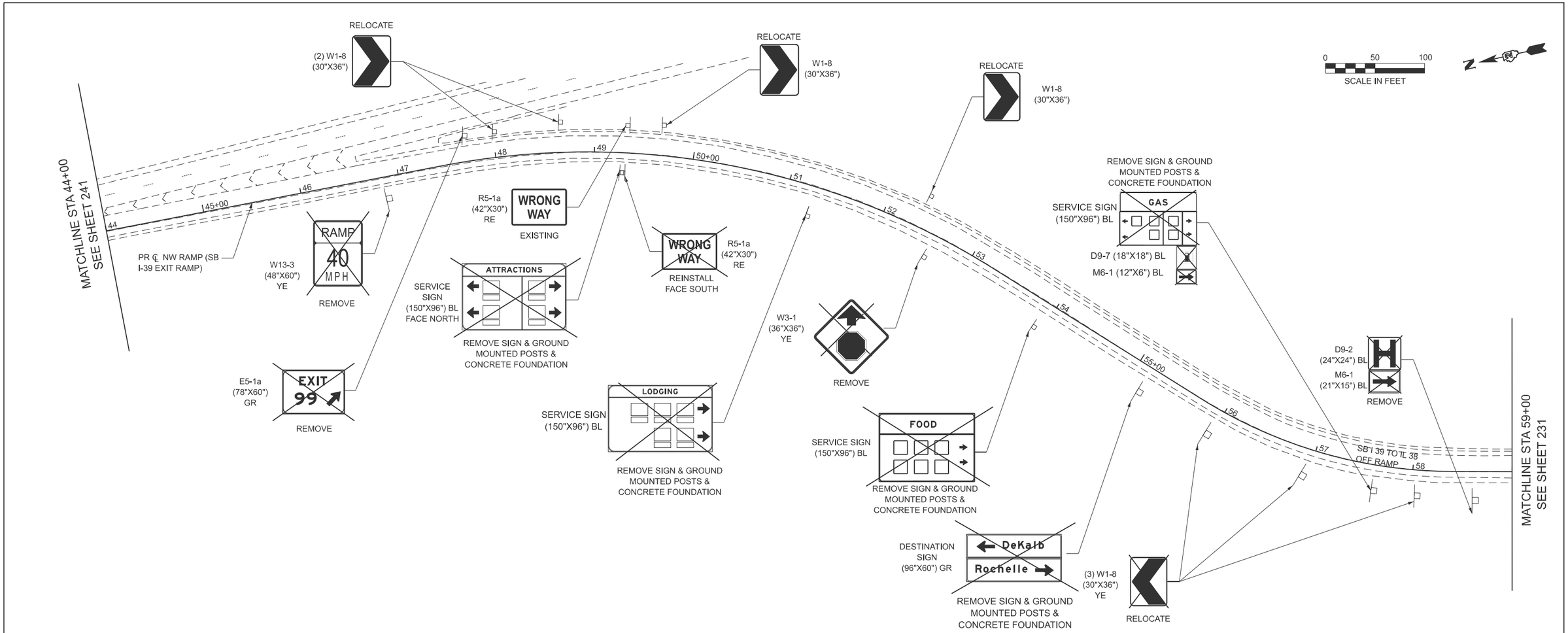

LEGEND

DO NOT ENTER — EXISTING SIGN TO REMAIN OR TO BE REMOVED AND REINSTALLED

DO NOT ENTER — EXISTING SIGN TO REMOVED

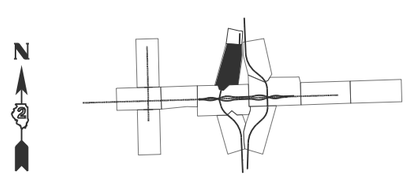

KEY MAP

MODEL: SHT_PLAN
FILE NAME: C:\Bentley\CONNECT10\1\Organization-Civil\IDOT_Standards\Cell\IDOT_Sheets.cel

HBM ENGINEERING GROUP, LLC

USER NAME =	DESIGNED - KAO	REVISED -	
	DRAWN - KAO	REVISED -	
	CHECKED - AMI	REVISED -	
PLOT DATE = 2/6/2025	DATE - 2/6/2025	REVISED -	

STATE OF ILLINOIS
DEPARTMENT OF TRANSPORTATION

SIGNING REMOVAL
S I-39 OFF RAMP

SCALE: | SHEET 9 OF 13 SHEETS | STA. 44+00.00 TO STA. 59+00.00

F.A.* RTE.	SECTION	COUNTY	TOTAL SHEETS	SHEET NO.
*	141-1HBR-3 & (9,10) R-3	OGLE	508	237
		CONTRACT NO. 64N98		
		ILLINOIS	FED. AID PROJECT	

*FAI ROUTE 39 (I-39) & FAP 567 (IL 38)

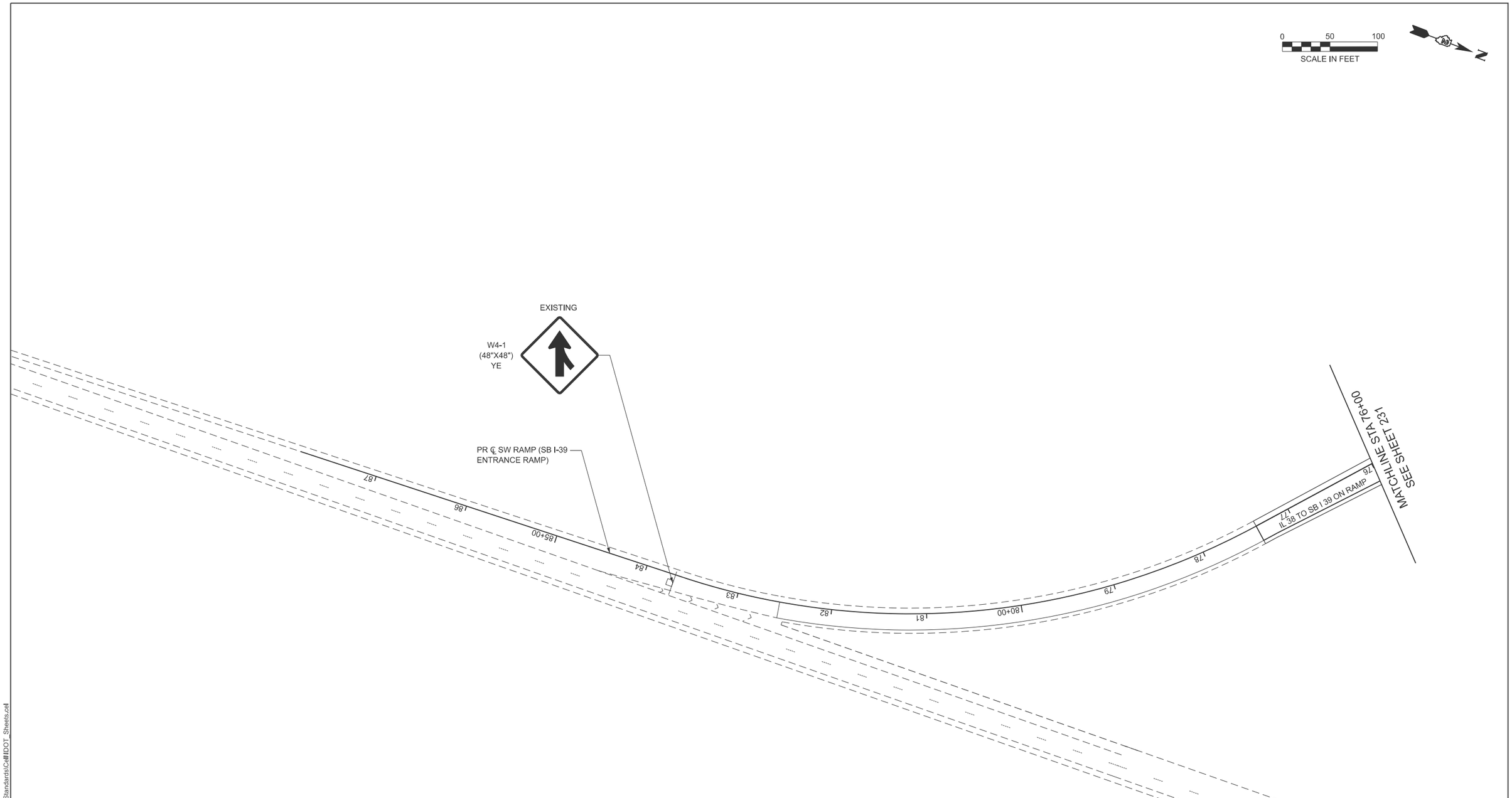

LEGEND

EXISTING SIGN TO REMAIN OR
TO BE REMOVED AND REINSTALLED

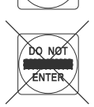

EXISTING SIGN TO REMOVED

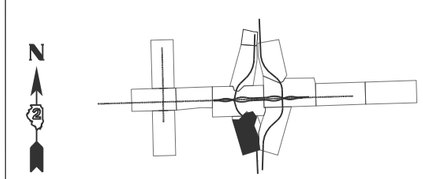

KEY MAP

MODEL: SHT_PLAN
FILE NAME: C:\Bentley\CONNECT10111\Organization-Civil\IDOT_Standards\Cell\IDOT_Sheets.cel

HBM ENGINEERING GROUP, LLC

USER NAME =	DESIGNED - KAO	REVISED -	
	DRAWN - KAO	REVISED -	
	CHECKED - AMI	REVISED -	
PLOT DATE = 2/6/2025	DATE - 2/6/2025	REVISED -	

STATE OF ILLINOIS
DEPARTMENT OF TRANSPORTATION

SIGNING REMOVAL
SB I-39 ENTRANCE RAMP

SCALE: | SHEET 10 OF 13 SHEETS | STA. | TO STA. 76+00.00

F.A.* RTE.	SECTION	COUNTY	TOTAL SHEETS	SHEET NO.
*	141-1HBR-3 & (9,10) R-3	OGLE	508	238
		CONTRACT NO. 64N98		
	ILLINOIS	FED. AID PROJECT		

*FAI ROUTE 39 (I-39) & FAP 567 (IL 38)

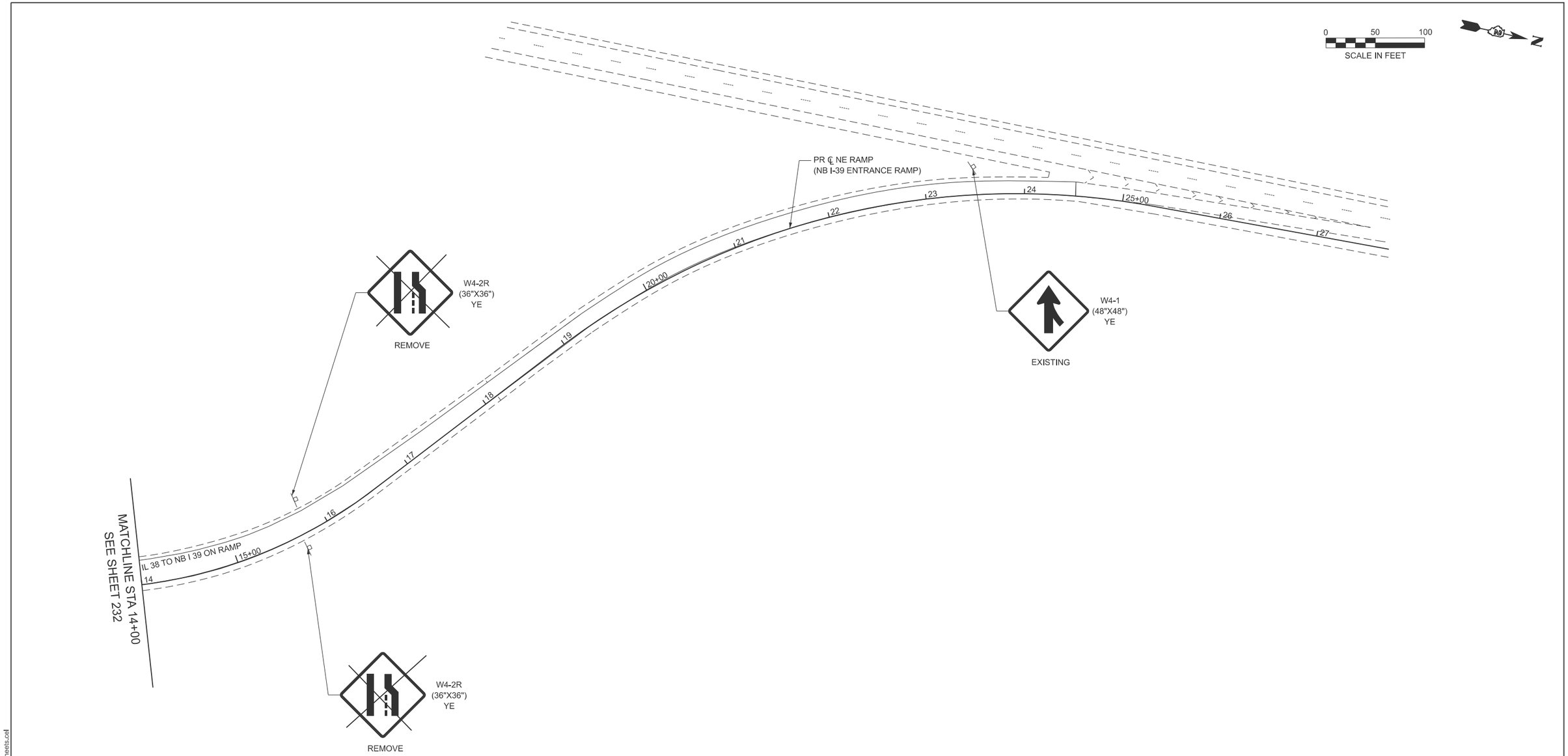

LEGEND

DO NOT ENTER — EXISTING SIGN TO REMAIN OR TO BE REMOVED AND REINSTALLED

DO NOT ENTER — EXISTING SIGN TO REMOVED

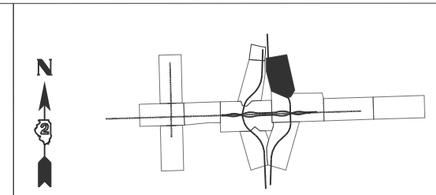

KEY MAP

MODEL: SHT_PLAN
FILE NAME: C:\Bentley\CONNECT10.11\Organization-Civil\IDOT_Standards\Cell\IDOT_Sheets.cel

HBM ENGINEERING GROUP, LLC

USER NAME =	DESIGNED - KAO	REVISED -	
	DRAWN - KAO	REVISED -	
	CHECKED - AMI	REVISED -	
PLOT DATE = 2/6/2025	DATE - 2/6/2025	REVISED -	

STATE OF ILLINOIS
DEPARTMENT OF TRANSPORTATION

SIGNING REMOVAL
NB I-39 ENTRANCE RAMP

SCALE: | SHEET 11 OF 13 SHEETS | STA. 14+00.00 TO STA.

F.A.* RTE.	SECTION	COUNTY	TOTAL SHEETS	SHEET NO.
*	141-1HBR-3 & (9,10) R-3	OGLE	508	239
		CONTRACT NO. 64N98		
	ILLINOIS	FED. AID PROJECT		

*FAI ROUTE 39 (I-39) & FAP 567 (IL 38)

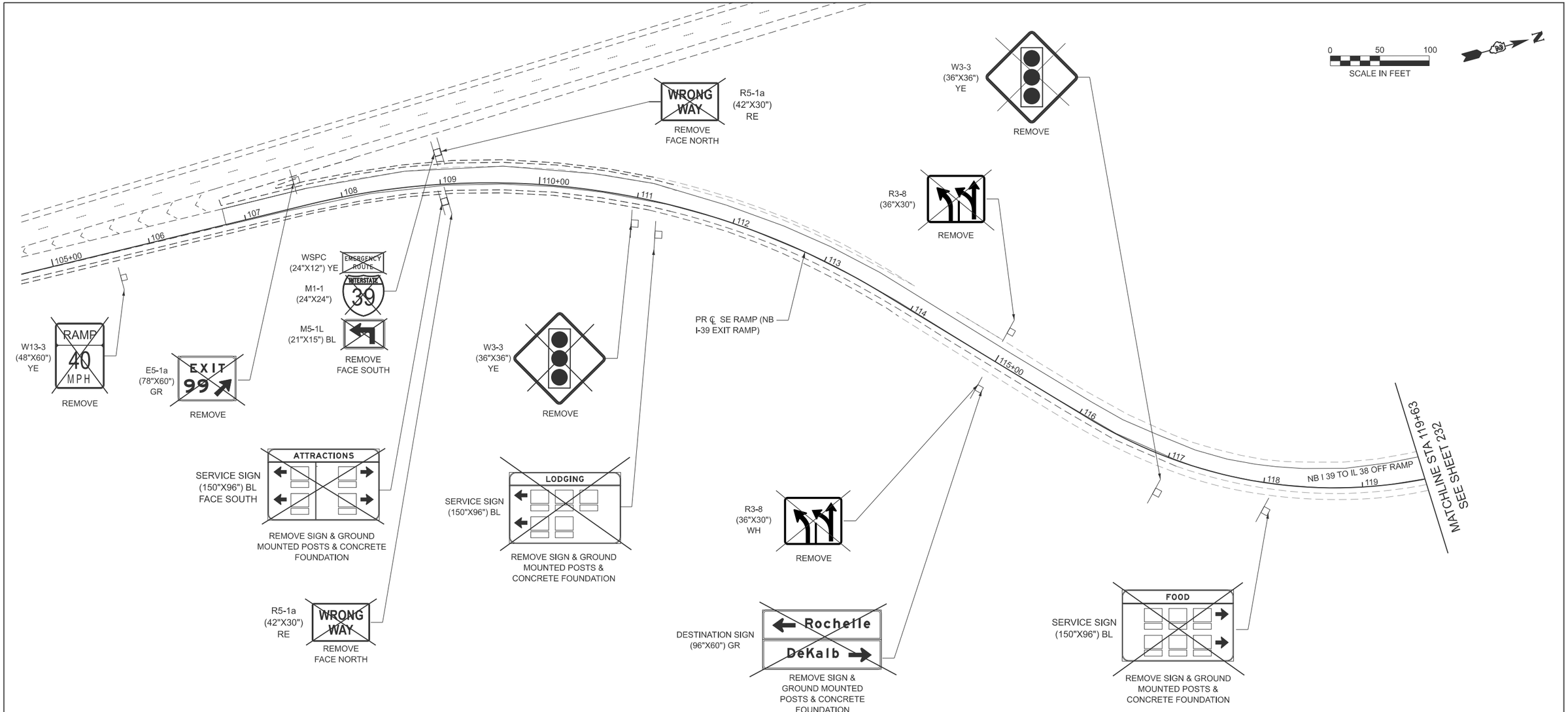

LEGEND

DO NOT ENTER — EXISTING SIGN TO REMAIN OR TO BE REMOVED AND REINSTALLED

DO NOT ENTER — EXISTING SIGN TO REMOVED

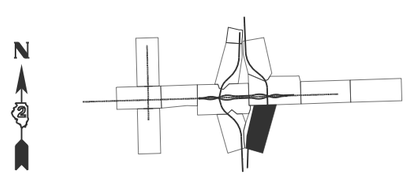

KEY MAP

MODEL: SHT_PLAN
FILE NAME: C:\Bentley\CONNECT10.11\Organization-Civil\IDOT_Standards\Cell\IDOT_Sheets.cel

HBM ENGINEERING GROUP, LLC

USER NAME =	DESIGNED - KAO	REVISED -	
	DRAWN - KAO	REVISED -	
	CHECKED - AMI	REVISED -	
PLOT DATE = 2/6/2025	DATE - 2/6/2025	REVISED -	

STATE OF ILLINOIS
DEPARTMENT OF TRANSPORTATION

SIGNING REMOVAL
NB I-39 OFF RAMP

SCALE: | SHEET 12 OF 13 SHEETS | STA. | TO STA. 119+63.00

F.A.* RTE.	SECTION	COUNTY	TOTAL SHEETS	SHEET NO.
*	141-1HBR-3 & (9,10) R-3	OGLE	508	240
		CONTRACT NO. 64N98		
	ILLINOIS	FED. AID PROJECT		

*FAI ROUTE 39 (I-39) & FAP 567 (IL 38)

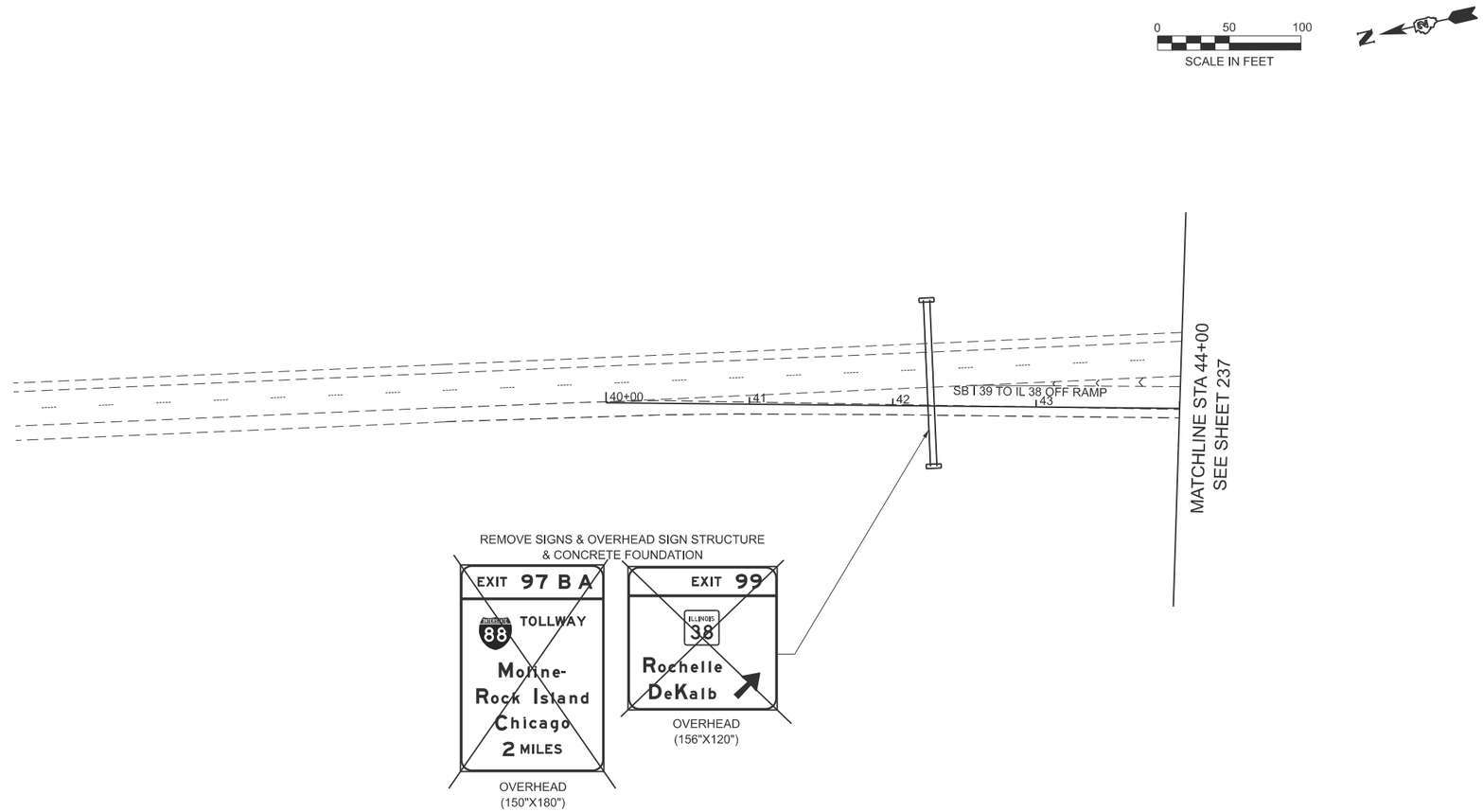

LEGEND

DO NOT ENTER — EXISTING SIGN TO REMAIN OR TO BE REMOVED AND REINSTALLED

DO NOT ENTER — EXISTING SIGN TO REMOVED

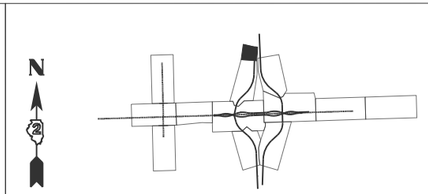

KEY MAP

MODEL: SHT_PLAN
FILE NAME: C:\Bentley\CONNECT10.11\Organization-Civil\IDOT_Standards\Civil\IDOT_Sheets.cel

HBM ENGINEERING GROUP, LLC

USER NAME =	DESIGNED - KAO	REVISED -	
	DRAWN - KAO	REVISED -	
	CHECKED - AMI	REVISED -	
PLOT DATE = 2/6/2025	DATE - 2/6/2025	REVISED -	

STATE OF ILLINOIS
DEPARTMENT OF TRANSPORTATION

SIGNING REMOVAL
S I-39 OFF RAMP

SCALE: | SHEET 13 OF 13 SHEETS | STA. | TO STA. 44+00.00

F.A.* RTE.	SECTION	COUNTY	TOTAL SHEETS	SHEET NO.
*	141-1HBR-3 & (9,10) R-3	OGLE	508	241
		CONTRACT NO. 64N98		
	ILLINOIS	FED. AID PROJECT		

*FAI ROUTE 39 (I-39) & FAP 567 (IL 38)

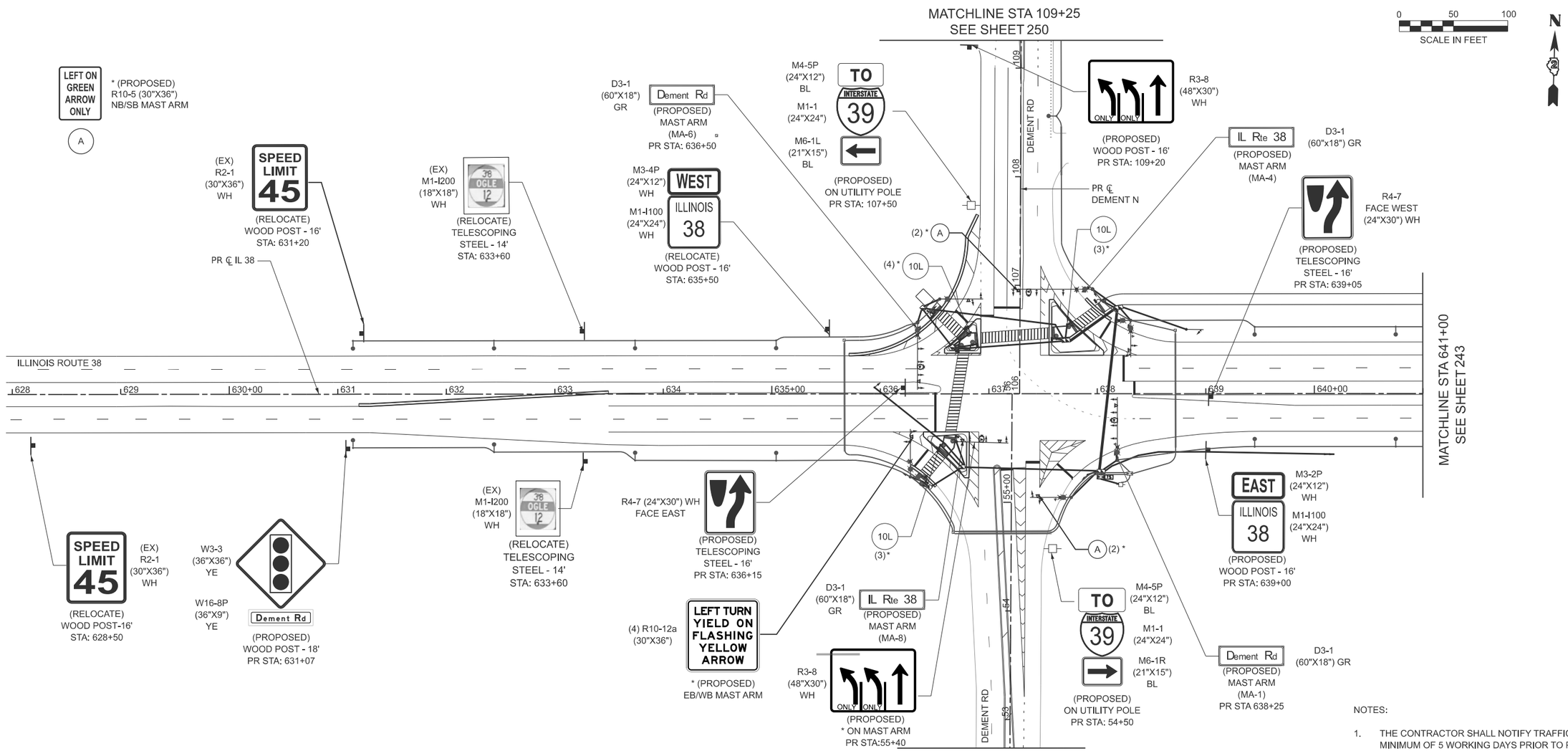

NOTES:

1. THE CONTRACTOR SHALL NOTIFY TRAFFIC OPERATIONS A MINIMUM OF 5 WORKING DAYS PRIOR TO PLACING PERMANENT PAVEMENT MARKING OR SIGNING.
2. POST LENGTHS ARE ESTIMATES FOR BIDDING PURPOSES ONLY. ACTUAL LENGTHS SHALL BE DETERMINED BY INSTALLING THE SIGNS AS SHOWN ON APPLICABLE STANDARDS.
3. SEE TRAFFIC SIGNAL GENERAL NOTES AND SIGNS, TRAFFIC SIGNAL MAST ARM AND SIGNAL POST SHEETS FOR SIGN PANEL LOCATIONS AND DETAILS.

LEGEND

1 — DO NOT ENTER — R5-1, RAMPS (48"x48")*, MEDIAN (36"X36"), WH/RE

2 — NO TURNS — R3-3 (36"x36") WH

3 — NO TURN ON RED — R10-11b, MAST ARM (36"x36"), SIGNAL POST (24"X24") WH

4 — WRONG WAY — R5-1a, RAMPS (42"x30")*, IL 38 (36"X24"), RE

5 — ONE WAY — R6-1r (54"x18") BLK

6 — ONE WAY — R6-1l (54"x18") BLK

7 — R3-1 (30"x30") WH

8 — R3-2 (30"x30") WH

9L — W1-8 (30"x36") YE

9R — W1-8 (30"x36") YE

10R / 10L — START CROSSING Watch For Vehicles; DON'T START If Start Flashing Crossing; TIME REMAINING To Finish Crossing; DON'T CROSS; PUSH BUTTON TO CROSS — R10-3e (9"x15") WH; 10R (RIGHT ARROW), 10L (LEFT ARROW)

EXISITNG SIGN TO REMAIN

PROPOSED SIGN OR RELOCATE

* RAMPS - ADD 2"X48" RED STRIP TO POST

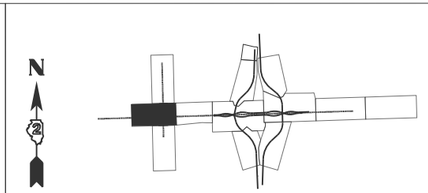

KEY MAP

MODEL: SHT_PLAN
FILE NAME: C:\Bentley\CONNECT10\1\Organization-Civil\IDOT_Standards\Cell\IDOT_Sheets.cel

HBM ENGINEERING GROUP, LLC

USER NAME =	DESIGNED - KAO	REVISED -
	DRAWN - KAO	REVISED -
	CHECKED - AMI	REVISED -
PLOT DATE = 2/6/2025	DATE - 2/6/2025	REVISED -

STATE OF ILLINOIS
DEPARTMENT OF TRANSPORTATION

PROPOSED SIGNAGE PLAN
IL 38 AT DEMENT RD

SCALE: | SHEET 1 OF 15 SHEETS | STA. 629+00 | TO STA. 641+00

F.A.* RTE.	SECTION	COUNTY	TOTAL SHEETS	SHEET NO.
*	141-1HBR-3 & (9,10) R-3	OGLE	508	242
		CONTRACT NO. 64N98		
		ILLINOIS	FED. AID PROJECT	

*FAI ROUTE 39 (I-39) & FAP 567 (IL 38)

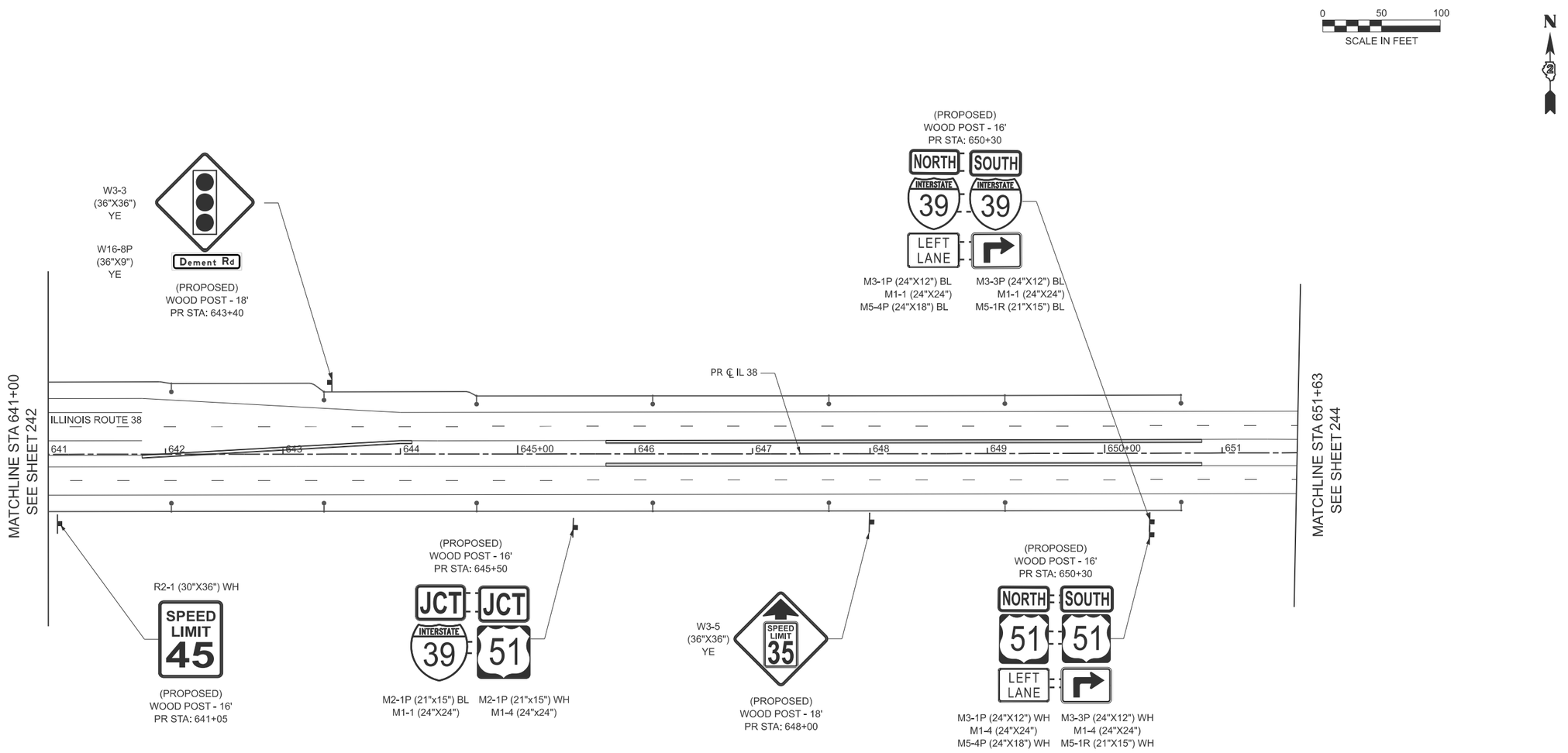

NOTES:

1. THE CONTRACTOR SHALL NOTIFY TRAFFIC OPERATIONS A MINIMUM OF 5 WORKING DAYS PRIOR TO PLACING PERMANENT PAVEMENT MARKING OR SIGNING.
2. POST LENGTHS ARE ESTIMATES FOR BIDDING PURPOSES ONLY. ACTUAL LENGTHS SHALL BE DETERMINED BY INSTALLING THE SIGNS AS SHOWN ON APPLICABLE STANDARDS.
3. SEE TRAFFIC SIGNAL GENERAL NOTES AND SIGNS, TRAFFIC SIGNAL MAST ARM AND SIGNAL POST SHEETS FOR SIGN PANEL LOCATIONS AND DETAILS.

LEGEND

1. DO NOT ENTER — R5-1, RAMPS (48"x48")*, MEDIAN (36"X36"), WH/RE
2. NO TURNS — R3-3 (36"x36") WH
3. NO TURN ON RED — R10-11b, MAST ARM (36"x36"), SIGNAL POST (24"X24"), WH
4. WRONG WAY — R5-1a, RAMPS (42"x30")*, IL 38 (36"X24"), RE
5. ONE WAY — R6-1r (54"x18") BLK
6. ONE WAY — R6-1l (54"x18") BLK
7. R3-1 (30"x30") WH
8. R3-2 (30"x30") WH
9L. W1-8 (30"x36") YE
9R. W1-8 (30"x36") YE
10R. START CROSSING Watch For Vehicles / DON'T START Finish Crossing If Started / TIME REMAINING To Finish Crossing / DON'T CROSS / PUSH BUTTON TO CROSS — R10-3e (9"x15") WH
10L. 10R (RIGHT ARROW), 10L (LEFT ARROW)

EXISITNG SIGN TO REMAIN

PROPOSED SIGN OR RELOCATE

* RAMPS - ADD 2"X48" RED STRIP TO POST

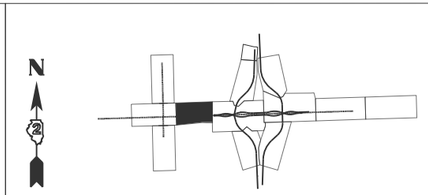

KEY MAP

MODEL: SHT_PLAN
FILE NAME: C:\Bentley\CONNECT10.11\Organization-Civil\IDOT_Standards\Civil\IDOT_Sheets.cel

HBM ENGINEERING GROUP, LLC

USER NAME =	DESIGNED - KAO	REVISED -	
	DRAWN - KAO	REVISED -	
	CHECKED - AMI	REVISED -	
PLOT DATE = 2/6/2025	DATE - 2/6/2025	REVISED -	

STATE OF ILLINOIS
DEPARTMENT OF TRANSPORTATION

PROPOSED SIGNAGE PLAN
IL 38

SCALE: | SHEET 2 OF 15 SHEETS | STA. 641+00 TO STA. 651+63

F.A.* RTE.	SECTION	COUNTY	TOTAL SHEETS	SHEET NO.
*	141-1HBR-3 & (9,10) R-3	OGLE	508	243
		CONTRACT NO. 64N98		
	ILLINOIS	FED. AID PROJECT		

*FAI ROUTE 39 (I-39) & FAP 567 (IL 38)

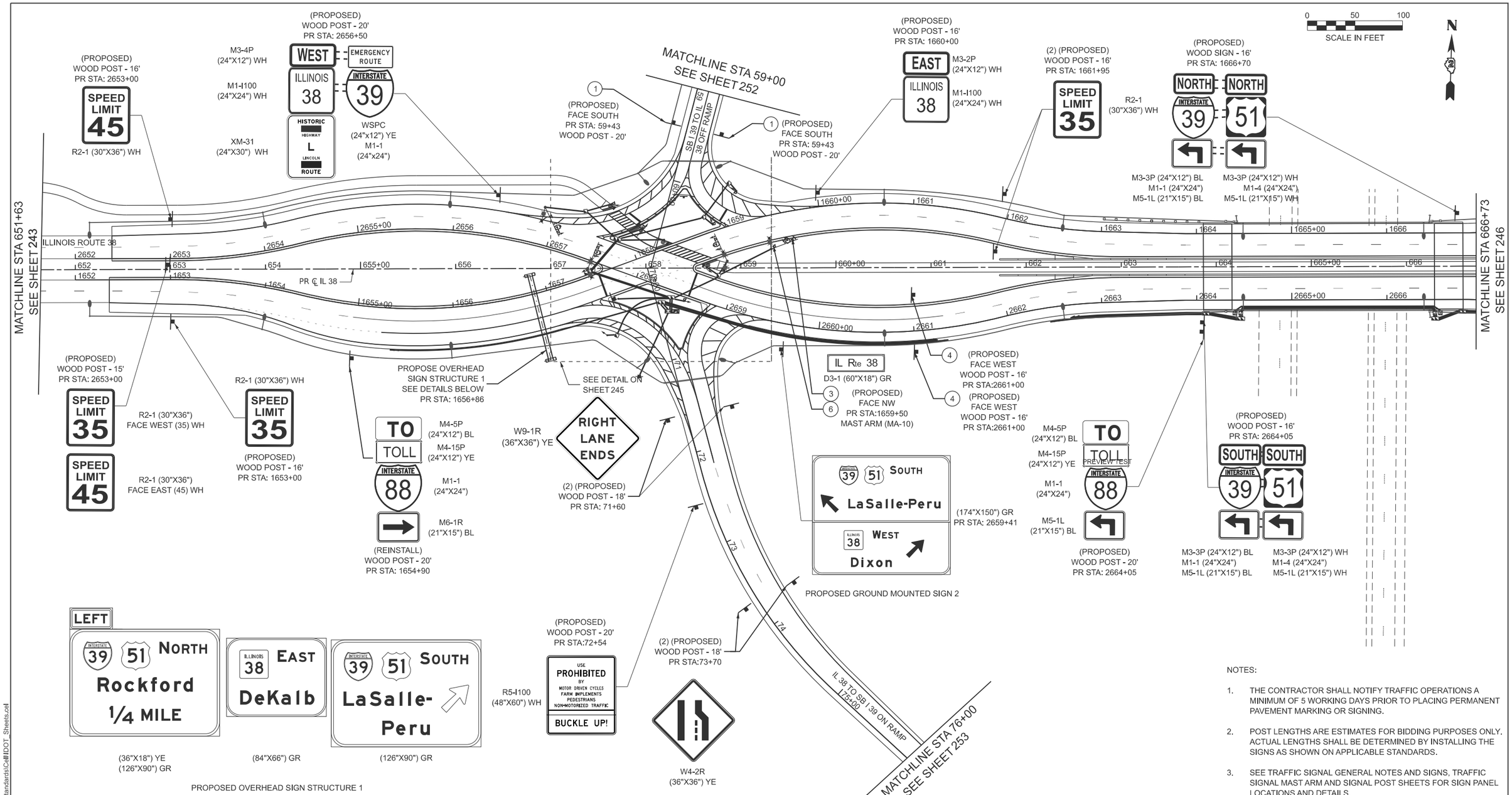

NOTES:

1. THE CONTRACTOR SHALL NOTIFY TRAFFIC OPERATIONS A MINIMUM OF 5 WORKING DAYS PRIOR TO PLACING PERMANENT PAVEMENT MARKING OR SIGNING.
2. POST LENGTHS ARE ESTIMATES FOR BIDDING PURPOSES ONLY. ACTUAL LENGTHS SHALL BE DETERMINED BY INSTALLING THE SIGNS AS SHOWN ON APPLICABLE STANDARDS.
3. SEE TRAFFIC SIGNAL GENERAL NOTES AND SIGNS, TRAFFIC SIGNAL MAST ARM AND SIGNAL POST SHEETS FOR SIGN PANEL LOCATIONS AND DETAILS.

LEGEND

1. DO NOT ENTER — R5-1, RAMPS (48"x48")*, MEDIAN (36"X36"), WH/RE
2. NO TURNS — R3-3, (36"x36"), WH
3. NO TURN ON RED — R10-11b, MAST ARM (36"x36"), SIGNAL POST (24"X24"), WH
4. WRONG WAY — R5-1a, RAMPS (42"x30")*, IL 38 (36"X24"), RE
5. ONE WAY — R6-1r, (54"x18"), BLK
6. ONE WAY — R6-1l, (54"x18"), BLK
7. R3-1, (30"x30"), WH
8. R3-2, (30"x30"), WH
9L. W1-8, (30"x36"), YE
9R. W1-8, (30"x36"), YE
10R, 10L. START CROSSING Watch For Vehicles; DON'T START Finish Crossing If Started; TIME REMAINING To Finish Crossing; DON'T CROSS; PUSH BUTTON TO CROSS — R10-3e, (9"x15"), WH; 10R (RIGHT ARROW), 10L (LEFT ARROW)

EXISITNG SIGN TO REMAIN

PROPOSED SIGN OR RELOCATE

* RAMPS - ADD 2"X48" RED STRIP TO POST

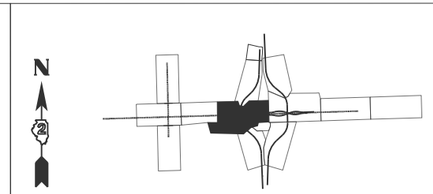

KEY MAP

MODEL: SHT_PLAN
FILE NAME: C:\Bentley\CONNECT10.11\Organization-Civil\IDOT_Standards\Civil\IDOT_Sheets.cet

HBM ENGINEERING GROUP, LLC

USER NAME =	DESIGNED - KAO	REVISED -
	DRAWN - KAO	REVISED -
	CHECKED - AMI	REVISED -
PLOT DATE = 2/6/2025	DATE - 2/6/2025	REVISED -

STATE OF ILLINOIS
DEPARTMENT OF TRANSPORTATION

PROPOSED SIGNAGE PLAN
IL 38 AT I-39

SCALE: | SHEET 3 OF 15 SHEETS | STA. 651+63 TO STA. 666+73

F.A.* RTE.	SECTION	COUNTY	TOTAL SHEETS	SHEET NO.
*	141-1HBR-3 & (9,10) R-3	OGLE	508	244

CONTRACT NO. 64N98

ILLINOIS FED. AID PROJECT

*FAI ROUTE 39 (I-39) & FAP 567 (IL 38)

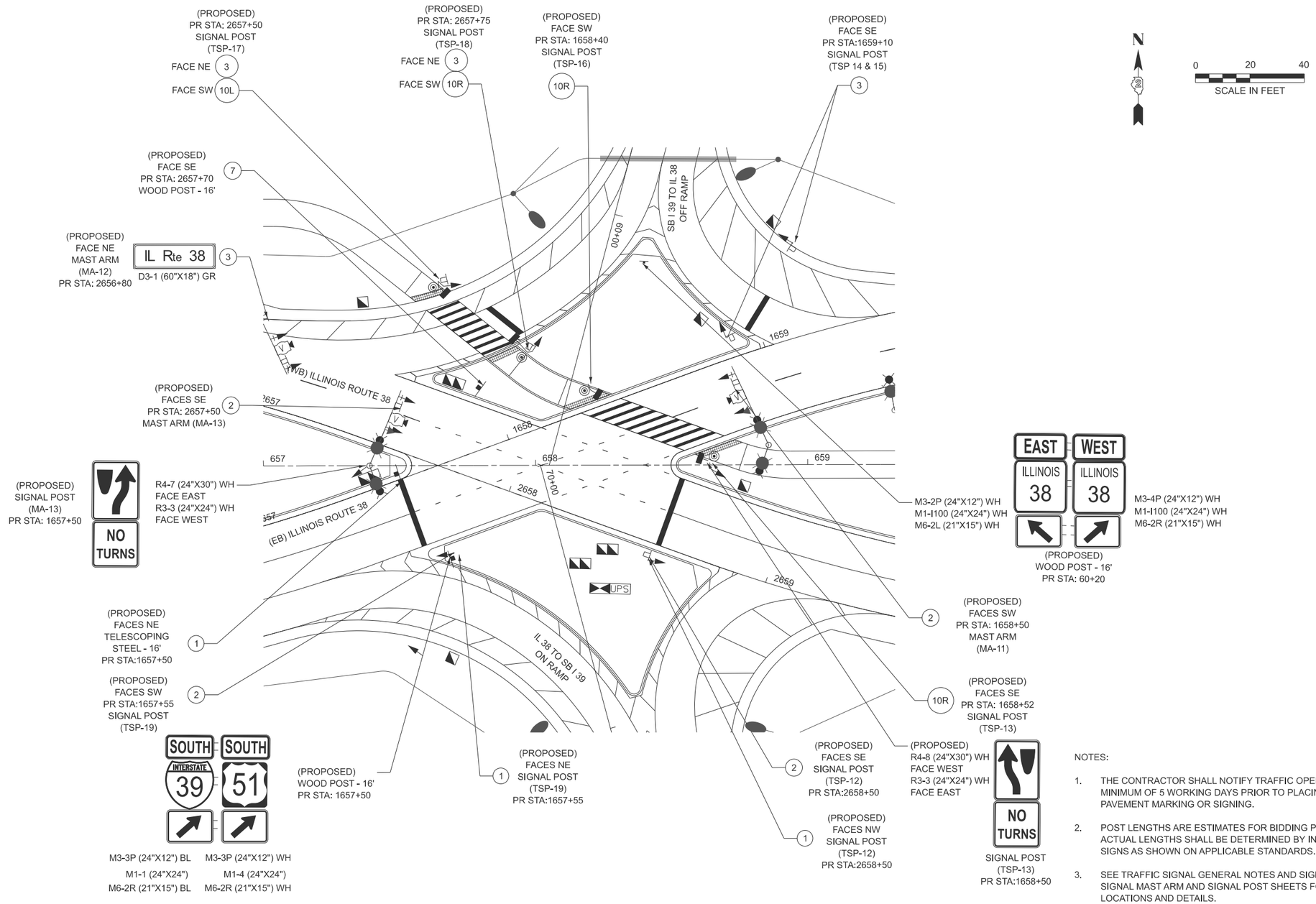

NOTES:

1. THE CONTRACTOR SHALL NOTIFY TRAFFIC OPERATIONS A MINIMUM OF 5 WORKING DAYS PRIOR TO PLACING PERMANENT PAVEMENT MARKING OR SIGNING.
2. POST LENGTHS ARE ESTIMATES FOR BIDDING PURPOSES ONLY. ACTUAL LENGTHS SHALL BE DETERMINED BY INSTALLING THE SIGNS AS SHOWN ON APPLICABLE STANDARDS.
3. SEE TRAFFIC SIGNAL GENERAL NOTES AND SIGNS, TRAFFIC SIGNAL MAST ARM AND SIGNAL POST SHEETS FOR SIGN PANEL LOCATIONS AND DETAILS.

LEGEND

1 — DO NOT ENTER — R5-1, RAMPS (48"x48")*, MEDIAN (36"X36"), WH/RE

2 — NO TURNS — R3-3 (36"x36") WH

3 — NO TURN ON RED — R10-11b, MAST ARM (36"x36"), SIGNAL POST (24"X24"), WH

4 — WRONG WAY — R5-1a, RAMPS (42"x30")*, IL 38 (36"X24"), RE

5 — ONE WAY — R6-1r (54"x18") BLK

6 — ONE WAY — R6-1l (54"x18") BLK

7 — R3-1 (30"x30") WH

8 — R3-2 (30"x30") WH

9L — W1-8 (30"x36") YE

9R — W1-8 (30"x36") YE

10R — START CROSSING Watch For Vehicles; DON'T START Finish Crossing If Started; TIME REMAINING To Finish Crossing; DON'T CROSS; PUSH BUTTON TO CROSS — R10-3e (9"x15") WH

10L

10R (RIGHT ARROW)
10L (LEFT ARROW)

EXISITNG SIGN TO REMAIN

PROPOSED SIGN OR RELOCATE

* RAMPS - ADD 2"X48" RED STRIP TO POST

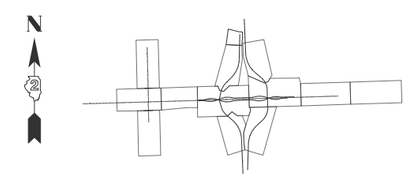

KEY MAP

MODEL: SHT_PLAN
FILE NAME: C:\Bentley\CONNECT10.11\Organization-Civil\IDOT_Standards\Cell\IDOT_Sheets.cel

HBM ENGINEERING GROUP, LLC

USER NAME =	DESIGNED - KAO	REVISED -	
	DRAWN - KAO	REVISED -	
	CHECKED - AMI	REVISED -	
PLOT DATE = 2/6/2025	DATE - 2/6/2025	REVISED -	

STATE OF ILLINOIS
DEPARTMENT OF TRANSPORTATION

PROPOSED SIGNAGE PLAN
IL 38 AT I-39

SCALE: | SHEET 4 OF 15 SHEETS | STA. | TO STA.

F.A.* RTE.	SECTION	COUNTY	TOTAL SHEETS	SHEET NO.
*	141-1HBR-3 & (9,10) R-3	OGLE	508	245

CONTRACT NO. 64N98

ILLINOIS | FED. AID PROJECT

*FAI ROUTE 39 (I-39) & FAP 567 (IL 38)

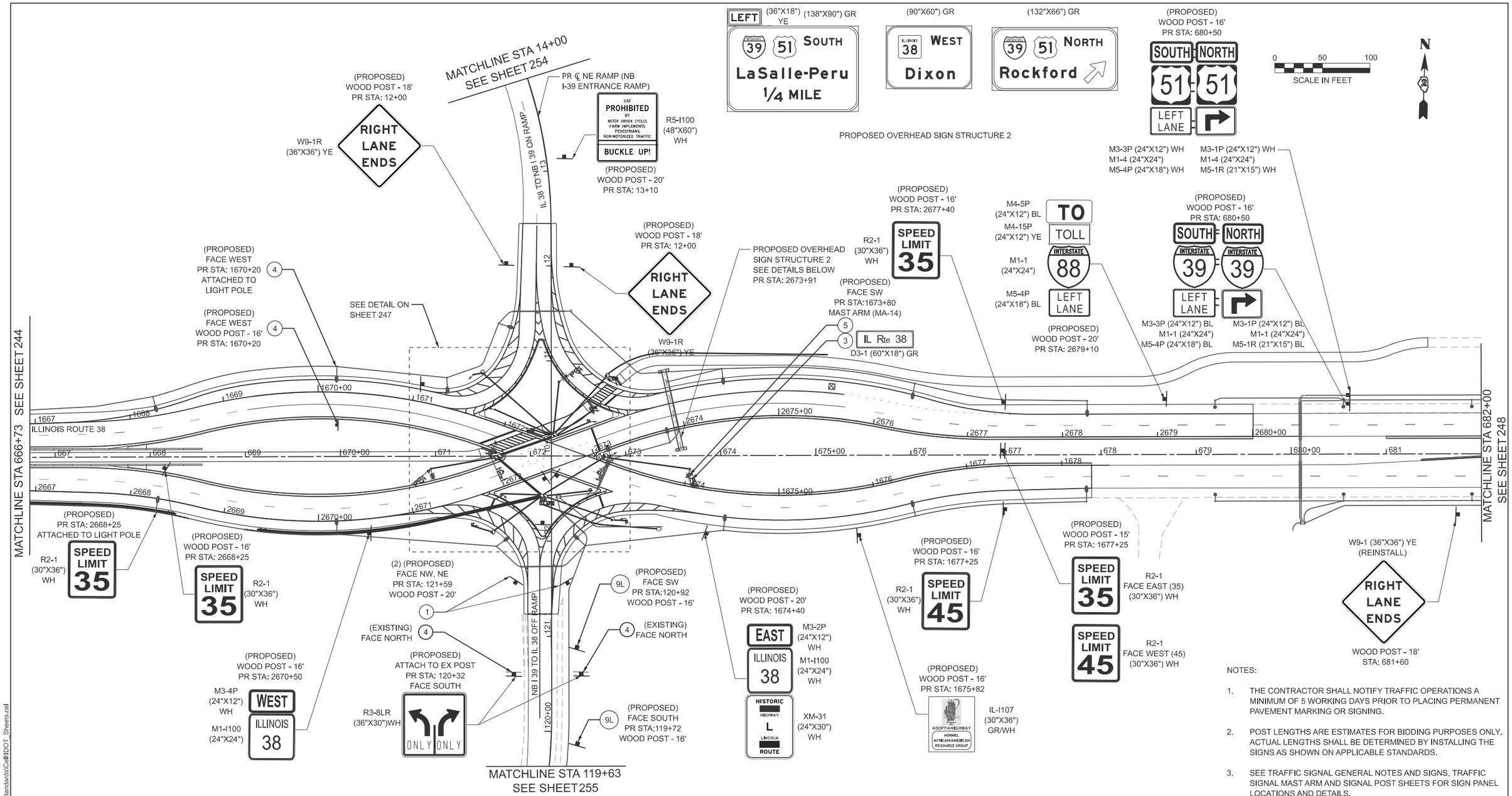

NOTES:

1. THE CONTRACTOR SHALL NOTIFY TRAFFIC OPERATIONS A MINIMUM OF 5 WORKING DAYS PRIOR TO PLACING PERMANENT PAVEMENT MARKING OR SIGNING.
2. POST LENGTHS ARE ESTIMATES FOR BIDDING PURPOSES ONLY. ACTUAL LENGTHS SHALL BE DETERMINED BY INSTALLING THE SIGNS AS SHOWN ON APPLICABLE STANDARDS.
3. SEE TRAFFIC SIGNAL GENERAL NOTES AND SIGNS, TRAFFIC SIGNAL MAST ARM AND SIGNAL POST SHEETS FOR SIGN PANEL LOCATIONS AND DETAILS.

LEGEND

1. DO NOT ENTER — R5-1, RAMPS (48"x48")*, MEDIAN (36"X36"), WH/RE
2. NO TURNS — R3-3 (36"x36") WH
3. NO TURN ON RED — R10-11b, MAST ARM (36"x36"), SIGNAL POST (24"X24"), WH
4. WRONG WAY — R5-1a, RAMPS (42"x30")*, IL 38 (36"X24"), RE
5. ONE WAY — R6-1r (54"x18") BLK
6. ONE WAY — R6-1l (54"x18") BLK
7. R3-1 (30"x30") WH
8. R3-2 (30"x30") WH
9L. W1-8 (30"x36") YE
9R. W1-8 (30"x36") YE
10R. START CROSSING Watch For Vehicles / DON'T START Finish Crossing If Started / TIME REMAINING To Finish Crossing / DON'T CROSS / PUSH BUTTON TO CROSS — R10-3e (9"x15") WH
10L. 10R (RIGHT ARROW) 10L (LEFT ARROW)

EXISITNG SIGN TO REMAIN

PROPOSED SIGN OR RELOCATE

* RAMPS - ADD 2"X48" RED STRIP TO POST

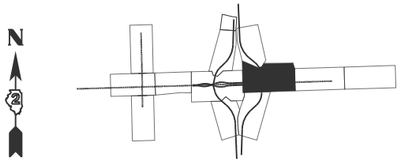

KEY MAP

MODEL: SHT_PLAN
FILE NAME: C:\Bentley\CONNECT10.11\Organization-Civil\IDOT_Standards\Cell\IDOT_Sheets.cel

HBM ENGINEERING GROUP, LLC

USER NAME =	DESIGNED - KAO	REVISED -	
	DRAWN - KAO	REVISED -	
	CHECKED - AMI	REVISED -	
PLOT DATE = 2/6/2025	DATE - 2/6/2025	REVISED -	

STATE OF ILLINOIS
DEPARTMENT OF TRANSPORTATION

PROPOSED SIGNAGE PLAN
IL 38 AT I-39

SCALE: | SHEET 5 OF 15 SHEETS | STA. 666+73 TO STA. 682+19

F.A.* RTE.	SECTION	COUNTY	TOTAL SHEETS	SHEET NO.
*	141-1HBR-3 & (9,10) R-3	OGLE	508	246

CONTRACT NO. 64N98

ILLINOIS | FED. AID PROJECT

*FAI ROUTE 39 (I-39) & FAP 567 (IL 38)

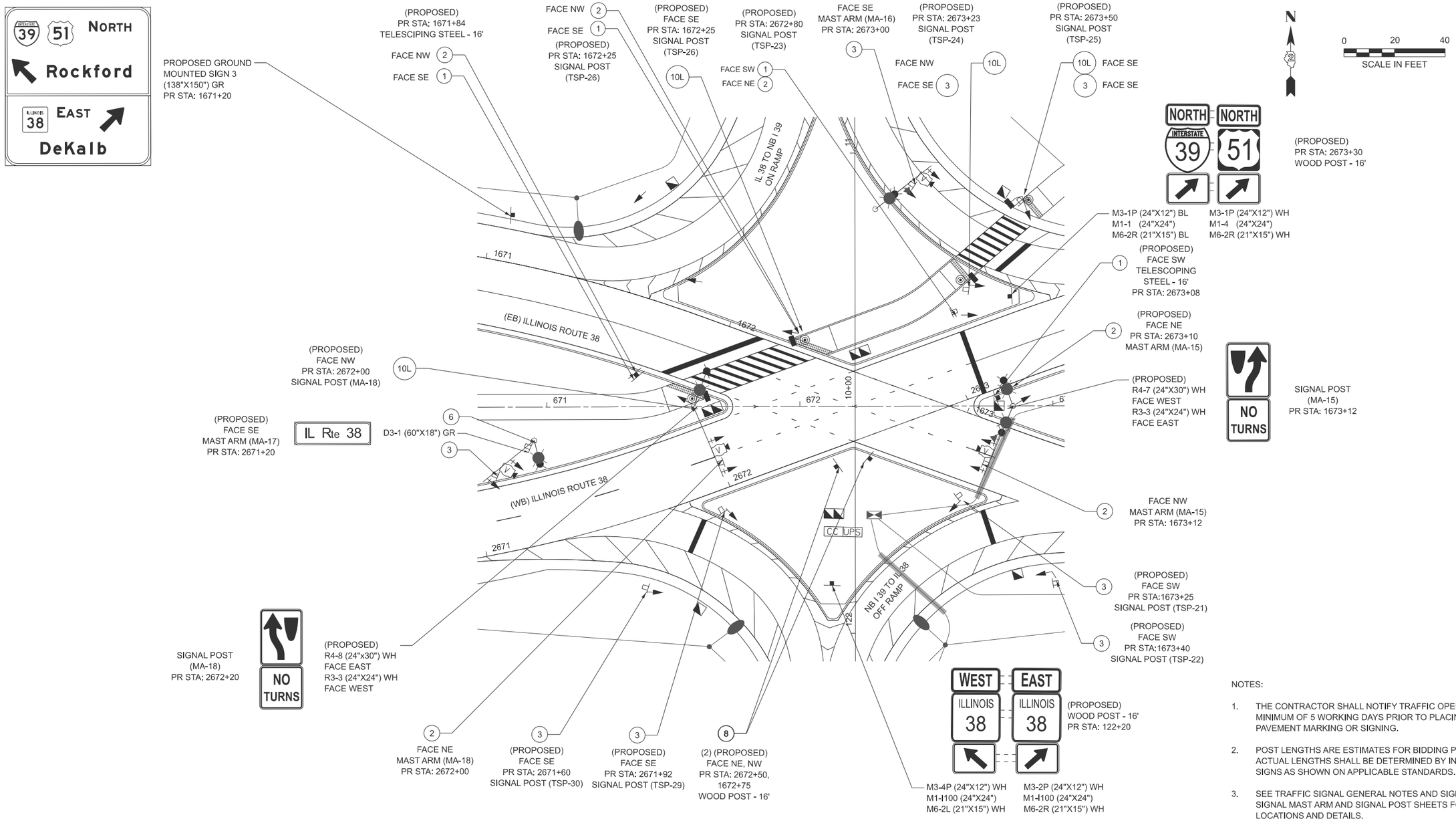

NOTES:

1. THE CONTRACTOR SHALL NOTIFY TRAFFIC OPERATIONS A MINIMUM OF 5 WORKING DAYS PRIOR TO PLACING PERMANENT PAVEMENT MARKING OR SIGNING.
2. POST LENGTHS ARE ESTIMATES FOR BIDDING PURPOSES ONLY. ACTUAL LENGTHS SHALL BE DETERMINED BY INSTALLING THE SIGNS AS SHOWN ON APPLICABLE STANDARDS.
3. SEE TRAFFIC SIGNAL GENERAL NOTES AND SIGNS, TRAFFIC SIGNAL MAST ARM AND SIGNAL POST SHEETS FOR SIGN PANEL LOCATIONS AND DETAILS.

LEGEND

1 — DO NOT ENTER — R5-1, RAMPS (48"x48")*, MEDIAN (36"X36"), WH/RE

2 — NO TURNS — R3-3 (36"x36"), WH

3 — NO TURN ON RED — R10-11b, MAST ARM (36"x36"), SIGNAL POST (24"X24"), WH

4 — WRONG WAY — R5-1a, RAMPS (42"x30")*, IL 38 (36"X24"), RE

5 — ONE WAY — R6-1r (54"x18"), BLK

6 — ONE WAY — R6-1l (54"x18"), BLK

7 — R3-1 (30"x30"), WH

8 — R3-2 (30"x30"), WH

9L — W1-8 (30"x36"), YE

9R — W1-8 (30"x36"), YE

10R, 10L — START CROSSING Watch For Vehicles; DON'T START Finish Crossing If Started; TIME REMAINING To Finish Crossing; DON'T CROSS; PUSH BUTTON TO CROSS — R10-3e (9"x15"), WH

10R (RIGHT ARROW)
10L (LEFT ARROW)

EXISITNG SIGN TO REMAIN

PROPOSED SIGN OR RELOCATE

* RAMPS - ADD 2"X48" RED STRIP TO POST

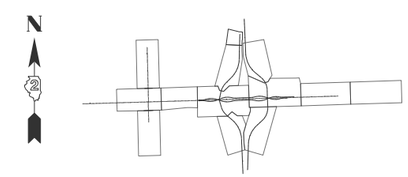

KEY MAP

MODEL: SHT_PLAN
FILE NAME: C:\Bentley\CONNECT10\11\Organization-Civil\IDOT_Standards\Cell\IDOT_Sheets.cel

HBM ENGINEERING GROUP, LLC

USER NAME =	DESIGNED - KAO	REVISED -	
	DRAWN - KAO	REVISED -	
	CHECKED - AMI	REVISED -	
PLOT DATE = 2/6/2025	DATE - 2/6/2025	REVISED -	

STATE OF ILLINOIS
DEPARTMENT OF TRANSPORTATION

PROPOSED SIGNAGE PLAN
IL 38 AT I-39

SCALE: | SHEET 6 OF 15 SHEETS | STA. | TO STA.

F.A.* RTE.	SECTION	COUNTY	TOTAL SHEETS	SHEET NO.
*	141-1HBR-3 & (9,10) R-3	OGLE	508	247
		CONTRACT NO. 64N98		
		ILLINOIS	FED. AID PROJECT	

*FAI ROUTE 39 (I-39) & FAP 567 (IL 38)

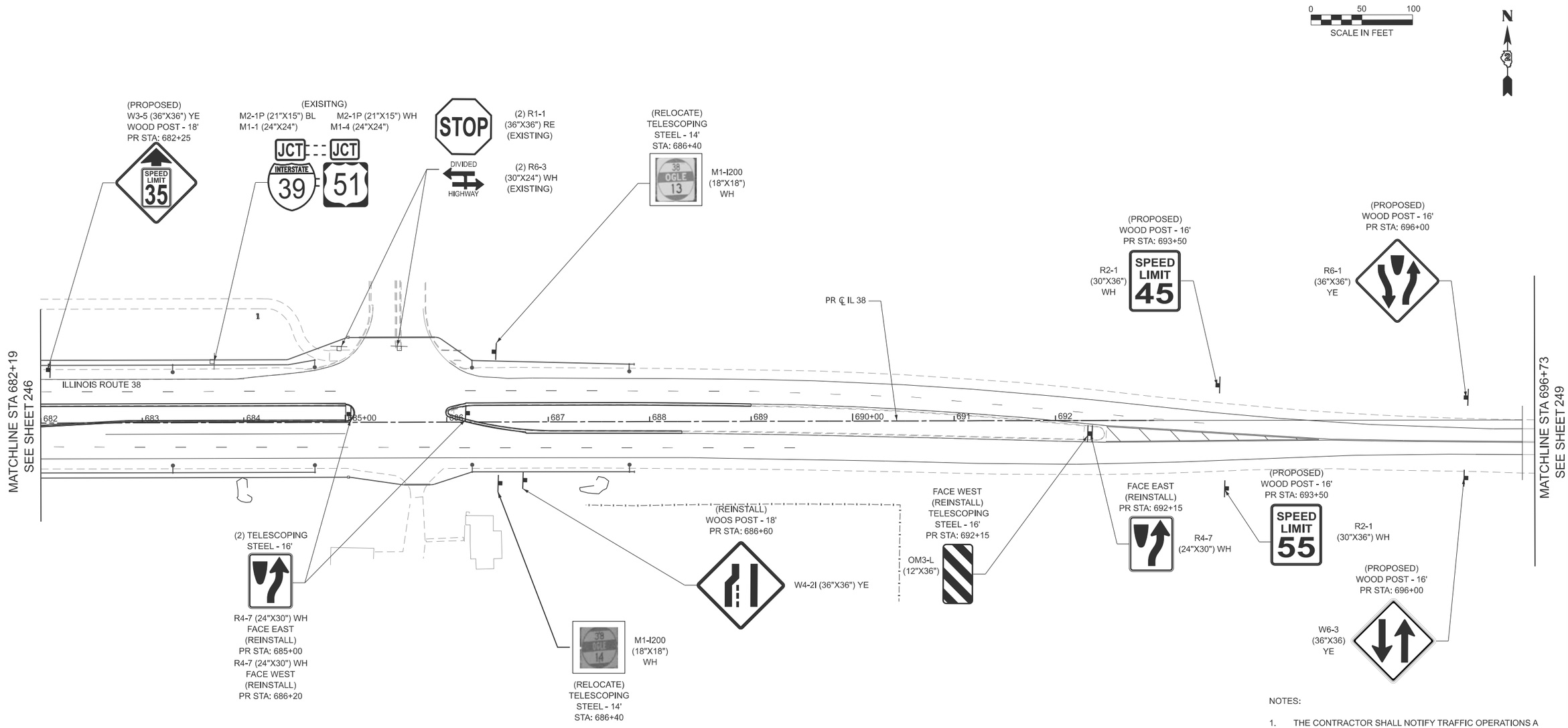

NOTES:

1. THE CONTRACTOR SHALL NOTIFY TRAFFIC OPERATIONS A MINIMUM OF 5 WORKING DAYS PRIOR TO PLACING PERMANENT PAVEMENT MARKING OR SIGNING.
2. POST LENGTHS ARE ESTIMATES FOR BIDDING PURPOSES ONLY. ACTUAL LENGTHS SHALL BE DETERMINED BY INSTALLING THE SIGNS AS SHOWN ON APPLICABLE STANDARDS.
3. SEE TRAFFIC SIGNAL GENERAL NOTES AND SIGNS, TRAFFIC SIGNAL MAST ARM AND SIGNAL POST SHEETS FOR SIGN PANEL LOCATIONS AND DETAILS.

LEGEND

1. DO NOT ENTER — R5-1, RAMPS (48"x48")*, MEDIAN (36"X36"), WH/RE
2. NO TURNS — R3-3, (36"x36"), WH
3. NO TURN ON RED — R10-11b, MAST ARM (36"x36"), SIGNAL POST (24"X24"), WH
4. WRONG WAY — R5-1a, RAMPS (42"x30")*, IL 38 (36"X24"), RE
5. ONE WAY — R6-1r, (54"x18"), BLK
6. ONE WAY — R6-1l, (54"x18"), BLK
7. R3-1, (30"x30"), WH
8. R3-2, (30"x30"), WH
9L. W1-8, (30"x36"), YE
9R. W1-8, (30"x36"), YE
10R. START CROSSING Watch For Vehicles; DON'T START Finish Crossing If Started; TIME REMAINING To Finish Crossing; DON'T CROSS; PUSH BUTTON TO CROSS — R10-3e, (9"x15"), WH
10L. 10R (RIGHT ARROW), 10L (LEFT ARROW)

EXISITNG SIGN TO REMAIN

PROPOSED SIGN OR RELOCATE

* RAMPS - ADD 2"X48" RED STRIP TO POST

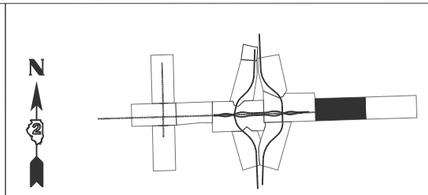

KEY MAP

MODEL: SHT_PLAN
FILE NAME: C:\Bentley\CONNECT10\11\Organization-Civil\IDOT_Standards\Cell\IDOT_Sheets.cel

HBM ENGINEERING GROUP, LLC

USER NAME =	DESIGNED - KAO	REVISED -	
	DRAWN - KAO	REVISED -	
	CHECKED - AMI	REVISED -	
PLOT DATE = 2/6/2025	DATE - 2/6/2025	REVISED -	

STATE OF ILLINOIS
DEPARTMENT OF TRANSPORTATION

PROPOSED SIGNAGE PLAN
IL 38

SCALE: | SHEET 7 OF 15 SHEETS | STA. 682+00 TO STA.

F.A.* RTE.	SECTION	COUNTY	TOTAL SHEETS	SHEET NO.
*	141-1HBR-3 & (9,10) R-3	OGLE	508	248
		CONTRACT NO. 64N98		
	ILLINOIS	FED. AID PROJECT		

*FAI ROUTE 39 (I-39) & FAP 567 (IL 38)

0 50 100
SCALE IN FEET

N

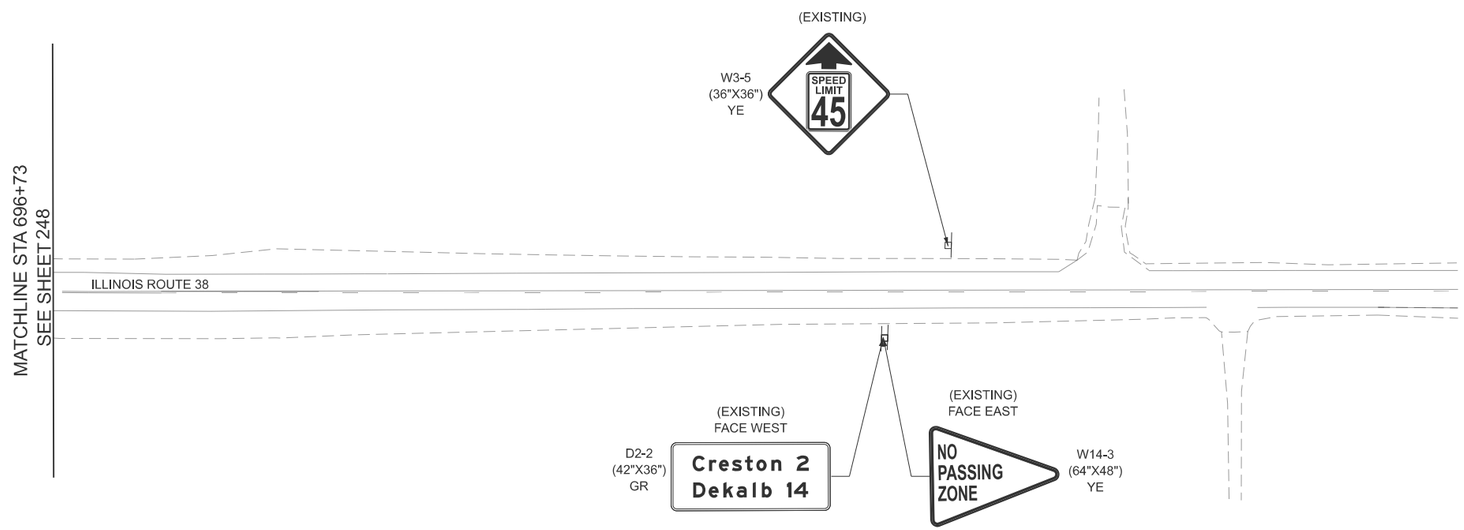

NOTES:

1. THE CONTRACTOR SHALL NOTIFY TRAFFIC OPERATIONS A MINIMUM OF 5 WORKING DAYS PRIOR TO PLACING PERMANENT PAVEMENT MARKING OR SIGNING.
2. POST LENGTHS ARE ESTIMATES FOR BIDDING PURPOSES ONLY. ACTUAL LENGTHS SHALL BE DETERMINED BY INSTALLING THE SIGNS AS SHOWN ON APPLICABLE STANDARDS.
3. SEE TRAFFIC SIGNAL GENERAL NOTES AND SIGNS, TRAFFIC SIGNAL MAST ARM AND SIGNAL POST SHEETS FOR SIGN PANEL LOCATIONS AND DETAILS.

LEGEND

1 — DO NOT ENTER — R5-1, RAMPS (48"x48")*, MEDIAN (36"X36"), WH/RE

2 — NO TURNS — R3-3, (36"x36"), WH

3 — NO TURN ON RED — R10-11b, MAST ARM (36"x36"), SIGNAL POST (24"X24"), WH

4 — WRONG WAY — R5-1a, RAMPS (42"x30")*, IL 38 (36"X24"), RE

5 — ONE WAY — R6-1r, (54"x18"), BLK

6 — ONE WAY — R6-1l, (54"x18"), BLK

7 — R3-1, (30"x30"), WH

8 — R3-2, (30"x30"), WH

9L — W1-8, (30"x36"), YE

9R — W1-8, (30"x36"), YE

10R / 10L — START CROSSING Watch For Vehicles; DON'T START Finish Crossing If Started; TIME REMAINING To Finish Crossing; DON'T CROSS; PUSH BUTTON TO CROSS — R10-3e, (9"x15"), WH

10R (RIGHT ARROW)
10L (LEFT ARROW)

EXISITNG SIGN TO REMAIN

PROPOSED SIGN OR RELOCATE

* RAMPS - ADD 2"X48" RED STRIP TO POST

N

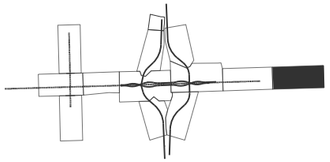

KEY MAP

MODEL: SHT_PLAN
FILE NAME: C:\Bentley\CONNECT10111\Organization-Civil\IDOT_Standards\Civil\IDOT_Sheets.cel

HBM ENGINEERING GROUP, LLC

USER NAME =	DESIGNED - KAO	REVISED -	
	DRAWN - KAO	REVISED -	
	CHECKED - AMI	REVISED -	
PLOT DATE = 2/6/2025	DATE - 2/6/2025	REVISED -	

STATE OF ILLINOIS
DEPARTMENT OF TRANSPORTATION

PROPOSED SIGNAGE PLAN
IL 38

SCALE: | SHEET 8 OF 15 SHEETS | STA. 696+73 TO STA.

F.A.* RTE.	SECTION	COUNTY	TOTAL SHEETS	SHEET NO.
*	141-1HBR-3 & (9,10) R-3	OGLE	508	249
		CONTRACT NO. 64N98		
		ILLINOIS	FED. AID PROJECT	

*FAI ROUTE 39 (I-39) & FAP 567 (IL 38)

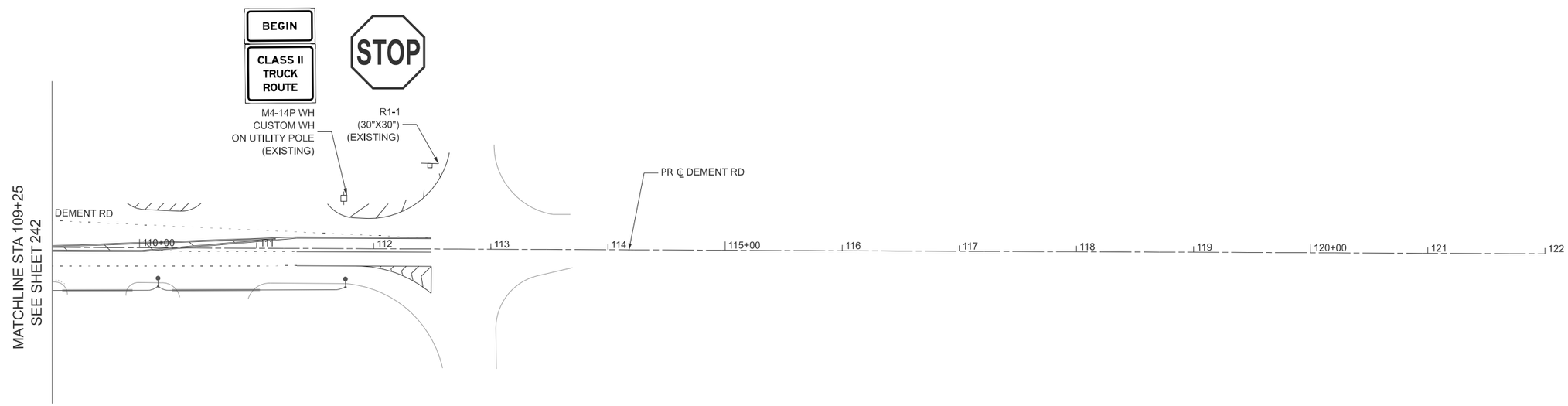

NOTES:

1. THE CONTRACTOR SHALL NOTIFY TRAFFIC OPERATIONS A MINIMUM OF 5 WORKING DAYS PRIOR TO PLACING PERMANENT PAVEMENT MARKING OR SIGNING.
2. POST LENGTHS ARE ESTIMATES FOR BIDDING PURPOSES ONLY. ACTUAL LENGTHS SHALL BE DETERMINED BY INSTALLING THE SIGNS AS SHOWN ON APPLICABLE STANDARDS.
3. SEE TRAFFIC SIGNAL GENERAL NOTES AND SIGNS, TRAFFIC SIGNAL MAST ARM AND SIGNAL POST SHEETS FOR SIGN PANEL LOCATIONS AND DETAILS.

LEGEND

1 — DO NOT ENTER — R5-1, RAMPS (48"x48")*, MEDIAN (36"X36"), WH/RE

2 — NO TURNS — R3-3, (36"x36"), WH

3 — NO TURN ON RED — R10-11b, MAST ARM (36"x36"), SIGNAL POST (24"X24"), WH

4 — WRONG WAY — R5-1a, RAMPS (42"x30")*, IL 38 (36"X24"), RE

5 — ONE WAY — R6-1r, (54"x18"), BLK

6 — ONE WAY — R6-1l, (54"x18"), BLK

7 — R3-1, (30"x30"), WH

8 — R3-2, (30"x30"), WH

9L — W1-8, (30"x36"), YE

9R — W1-8, (30"x36"), YE

10R / 10L — START CROSSING Watch For Vehicles; DON'T START Finish Crossing If Started; TIME REMAINING To Finish Crossing; DON'T CROSS; PUSH BUTTON TO CROSS — R10-3e, (9"x15"), WH

10R (RIGHT ARROW)
10L (LEFT ARROW)

EXISITNG SIGN TO REMAIN

PROPOSED SIGN OR RELOCATE

* RAMPS - ADD 2"X48" RED STRIP TO POST

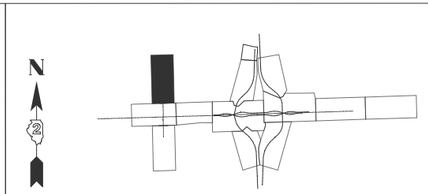

KEY MAP

MODEL: SHT_PLAN
FILE NAME: C:\Bentley\CONNECT1011\Organization-Civil\IDOT_Standards\Cell\IDOT_Sheets.cel

HBM ENGINEERING GROUP, LLC

USER NAME =	DESIGNED - KAO	REVISED -	
	DRAWN - KAO	REVISED -	
	CHECKED - AMI	REVISED -	
PLOT DATE = 2/6/2025	DATE - 2/6/2025	REVISED -	

STATE OF ILLINOIS
DEPARTMENT OF TRANSPORTATION

PROPOSED SIGNAGE PLAN
DEMENT RD N OF IL 38

SCALE: | SHEET 9 OF 15 SHEETS | STA. 109+25 TO STA.

F.A.* RTE.	SECTION	COUNTY	TOTAL SHEETS	SHEET NO.
*	141-1HBR-3 & (9,10) R-3	OGLE	508	250
		CONTRACT NO. 64N98		
	ILLINOIS	FED. AID PROJECT		

*FAI ROUTE 39 (I-39) & FAP 567 (IL 38)

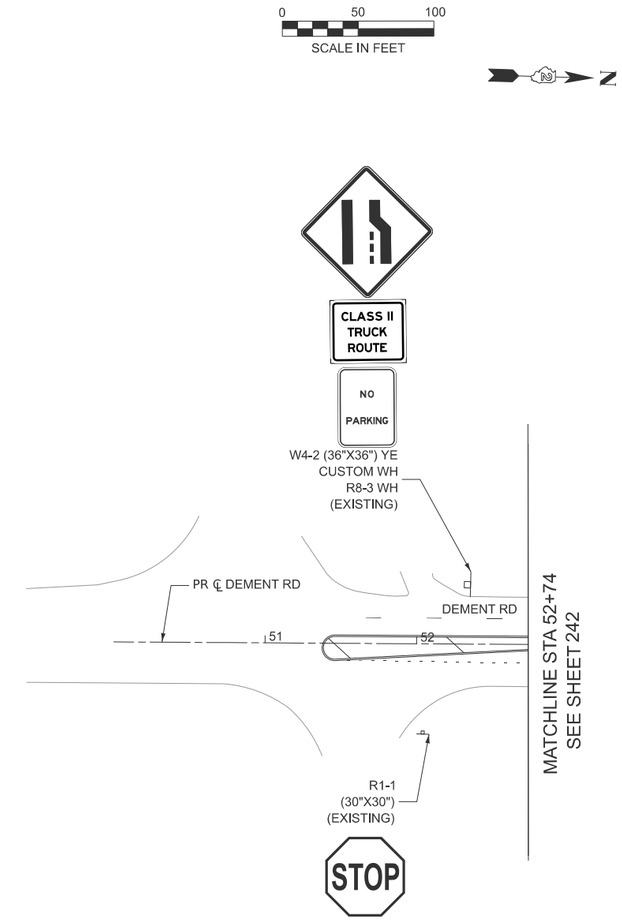

NOTES:

1. THE CONTRACTOR SHALL NOTIFY TRAFFIC OPERATIONS A MINIMUM OF 5 WORKING DAYS PRIOR TO PLACING PERMANENT PAVEMENT MARKING OR SIGNING.
2. POST LENGTHS ARE ESTIMATES FOR BIDDING PURPOSES ONLY. ACTUAL LENGTHS SHALL BE DETERMINED BY INSTALLING THE SIGNS AS SHOWN ON APPLICABLE STANDARDS.
3. SEE TRAFFIC SIGNAL GENERAL NOTES AND SIGNS, TRAFFIC SIGNAL MAST ARM AND SIGNAL POST SHEETS FOR SIGN PANEL LOCATIONS AND DETAILS.

LEGEND

1 — DO NOT ENTER — R5-1, RAMPS (48"x48")*, MEDIAN (36"X36"), WH/RE

2 — NO TURNS — R3-3, (36"x36"), WH

3 — NO TURN ON RED — R10-11b, MAST ARM (36"x36"), SIGNAL POST (24"X24"), WH

4 — WRONG WAY — R5-1a, RAMPS (42"x30")*, IL 38 (36"X24"), RE

5 — ONE WAY — R6-1r, (54"x18"), BLK

6 — ONE WAY — R6-1l, (54"x18"), BLK

7 — R3-1, (30"x30"), WH

8 — R3-2, (30"x30"), WH

9L — W1-8, (30"x36"), YE

9R — W1-8, (30"x36"), YE

10R, 10L — START CROSSING Watch For Vehicles; DON'T START Finish Crossing If Started; TIME REMAINING To Finish Crossing; DON'T CROSS; PUSH BUTTON TO CROSS — R10-3e, (9"x15"), WH

10R (RIGHT ARROW)
10L (LEFT ARROW)

EXISITNG SIGN TO REMAIN

PROPOSED SIGN OR RELOCATE

* RAMPS - ADD 2"X48" RED STRIP TO POST

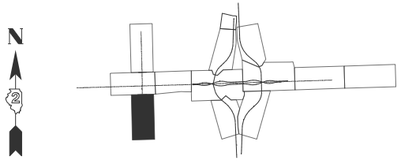

KEY MAP

MODEL: SHT_PLAN
FILE NAME: C:\Bentley\CONNECT10\11\Organization~Civil\IDOT_Standards\Cell\IDOT_Sheets.cel

HBM ENGINEERING GROUP, LLC

USER NAME =	DESIGNED - KAO	REVISED -	
	DRAWN - KAO	REVISED -	
	CHECKED - AMI	REVISED -	
PLOT DATE = 2/6/2025	DATE - 2/6/2025	REVISED -	

STATE OF ILLINOIS
DEPARTMENT OF TRANSPORTATION

PROPOSED SIGNAGE PLAN
DEMENT RD S OF IL 38

SCALE: | SHEET 10 OF 15 SHEETS | STA. | TO STA. 52+74

F.A.* RTE.	SECTION	COUNTY	TOTAL SHEETS	SHEET NO.
*	141-1HBR-3 & (9,10) R-3	OGLE	508	251
		CONTRACT NO. 64N98		
		ILLINOIS	FED. AID PROJECT	

*FAI ROUTE 39 (I-39) & FAP 567 (IL 38)

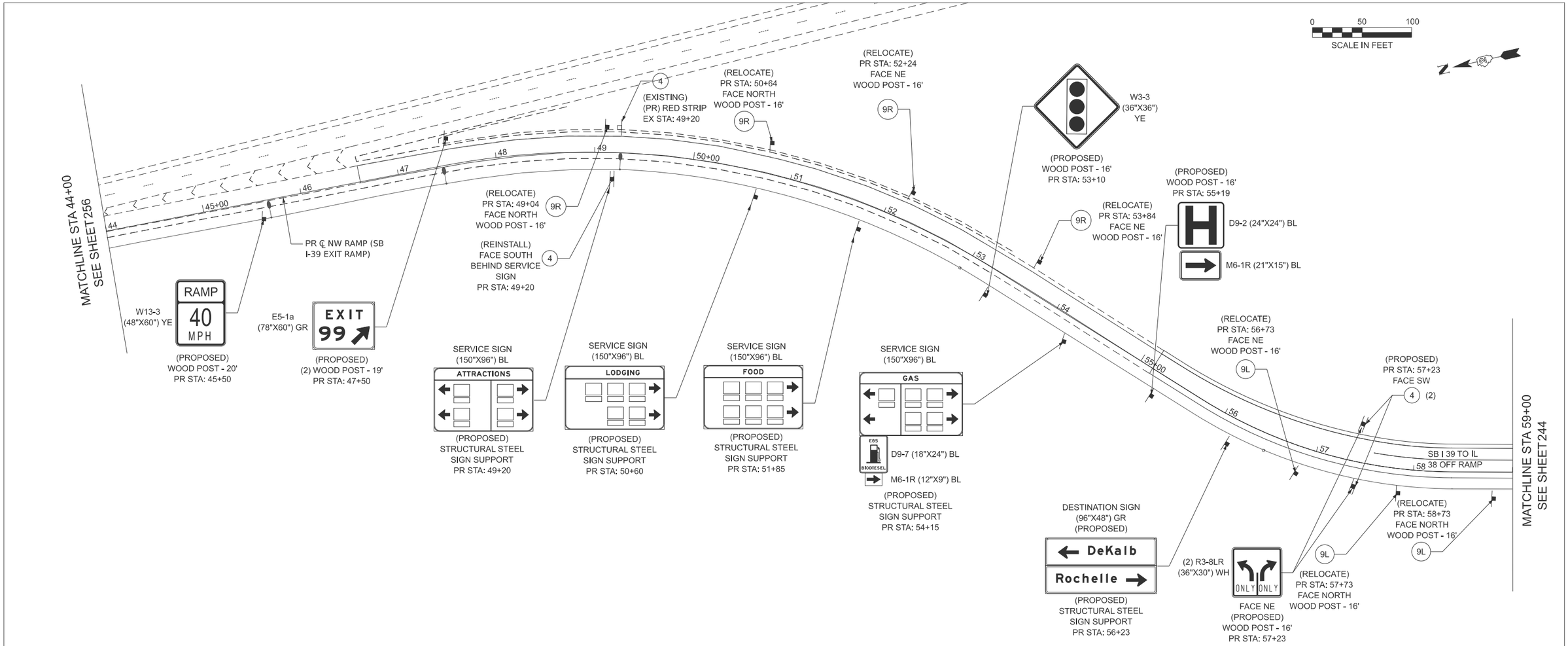

NOTES:

1. THE CONTRACTOR SHALL NOTIFY TRAFFIC OPERATIONS A MINIMUM OF 5 WORKING DAYS PRIOR TO PLACING PERMANENT PAVEMENT MARKING OR SIGNING.
2. POST LENGTHS ARE ESTIMATES FOR BIDDING PURPOSES ONLY. ACTUAL LENGTHS SHALL BE DETERMINED BY INSTALLING THE SIGNS AS SHOWN ON APPLICABLE STANDARDS.
3. SEE TRAFFIC SIGNAL GENERAL NOTES AND SIGNS, TRAFFIC SIGNAL MAST ARM AND SIGNAL POST SHEETS FOR SIGN PANEL LOCATIONS AND DETAILS.

LEGEND

1. DO NOT ENTER — R5-1, RAMPS (48"x48")*, MEDIAN (36"X36"), WH/RE
2. NO TURNS — R3-3 (36"x36") WH
3. NO TURN ON RED — R10-11b, MAST ARM (36"x36"), SIGNAL POST (24"X24"), WH
4. WRONG WAY — R5-1a, RAMPS (42"x30")*, IL 38 (36"X24"), RE
5. ONE WAY — R6-1r (54"x18") BLK
6. ONE WAY — R6-1l (54"x18") BLK
7. R3-1 (30"x30") WH
8. R3-2 (30"x30") WH
9L. W1-8 (30"x36") YE
9R. W1-8 (30"x36") YE
10R, 10L. START CROSSING Watch For Vehicles; DON'T START Finish Crossing If Started; TIME REMAINING To Finish Crossing; DON'T CROSS; PUSH BUTTON TO CROSS — R10-3e (9"x15") WH; 10R (RIGHT ARROW), 10L (LEFT ARROW)

EXISITNG SIGN TO REMAIN

PROPOSED SIGN OR RELOCATE

* RAMPS - ADD 2"X48" RED STRIP TO POST

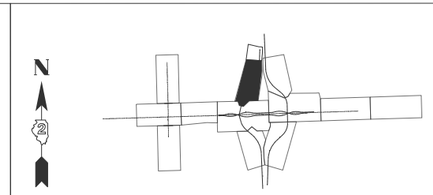

KEY MAP

MODEL: SHT_PLAN
FILE NAME: C:\Bentley\CONNECT10.11\Organization-Civil\IDOT_Standards\Cell\IDOT_Sheets.cel

HBM ENGINEERING GROUP, LLC

USER NAME =	DESIGNED - KAO	REVISED -	
	DRAWN - KAO	REVISED -	
	CHECKED - AMI	REVISED -	
PLOT DATE = 2/6/2025	DATE - 2/6/2025	REVISED -	

STATE OF ILLINOIS
DEPARTMENT OF TRANSPORTATION

PROPOSED SIGNAGE PLAN
S I-39 OFF RAMP

SCALE: | SHEET 11 OF 15 SHEETS | STA. 44+00 TO STA. 59+00

F.A.* RTE.	SECTION	COUNTY	TOTAL SHEETS	SHEET NO.
*	141-1HBR-3 & (9,10) R-3	OGLE	508	252
		CONTRACT NO. 64N98		
		ILLINOIS	FED. AID PROJECT	

*FAI ROUTE 39 (I-39) & FAP 567 (IL 38)

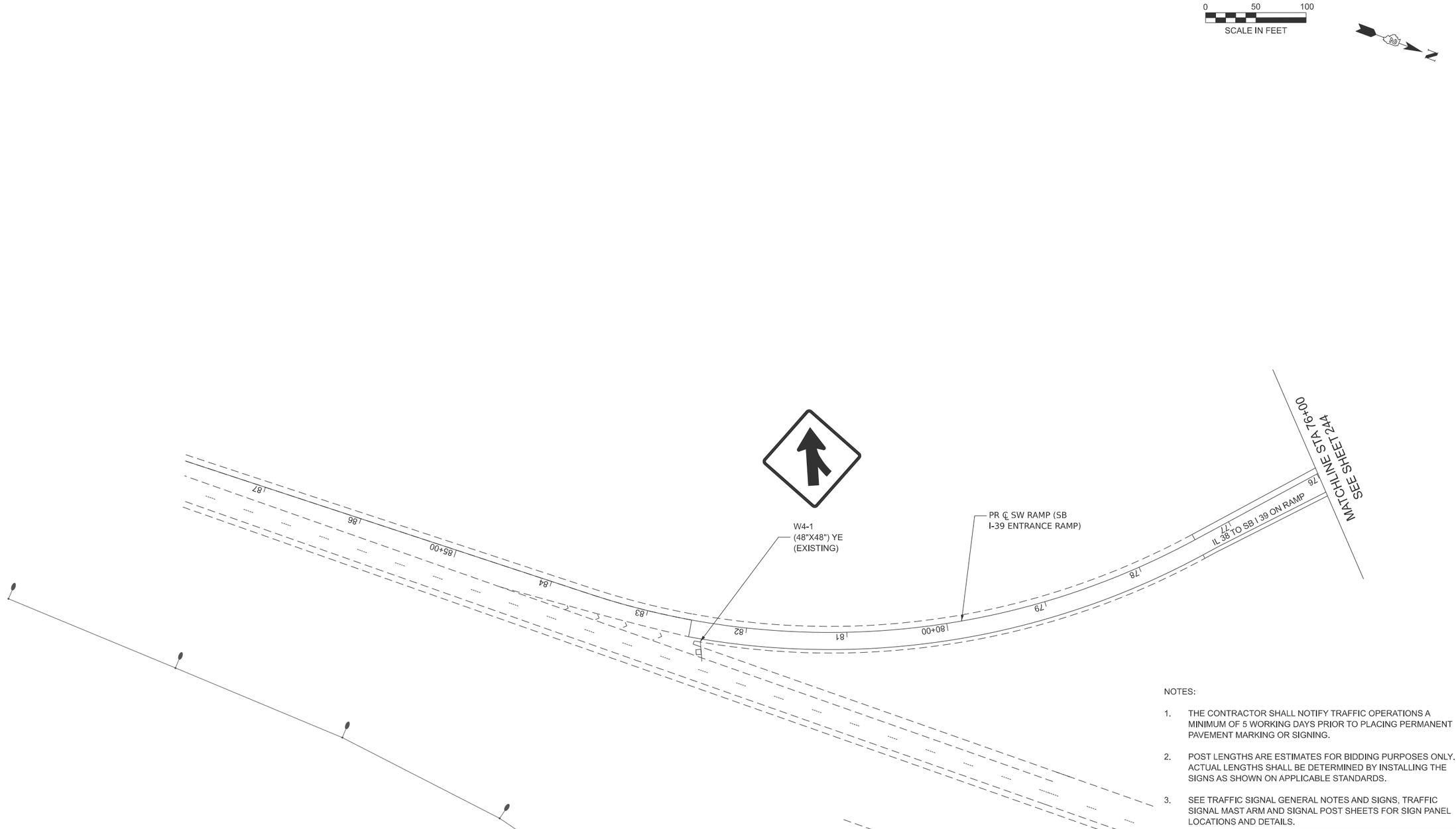

NOTES:

1. THE CONTRACTOR SHALL NOTIFY TRAFFIC OPERATIONS A MINIMUM OF 5 WORKING DAYS PRIOR TO PLACING PERMANENT PAVEMENT MARKING OR SIGNING.
2. POST LENGTHS ARE ESTIMATES FOR BIDDING PURPOSES ONLY. ACTUAL LENGTHS SHALL BE DETERMINED BY INSTALLING THE SIGNS AS SHOWN ON APPLICABLE STANDARDS.
3. SEE TRAFFIC SIGNAL GENERAL NOTES AND SIGNS, TRAFFIC SIGNAL MAST ARM AND SIGNAL POST SHEETS FOR SIGN PANEL LOCATIONS AND DETAILS.

LEGEND

1. DO NOT / ENTER — R5-1, RAMPS (48"x48")*, MEDIAN (36"X36"), WH/RE
2. NO TURNS — R3-3, (36"x36"), WH
3. NO TURN ON RED — R10-11b, MAST ARM (36"x36"), SIGNAL POST (24"X24"), WH
4. WRONG WAY — R5-1a, RAMPS (42"x30")*, IL 38 (36"X24"), RE
5. ONE WAY — R6-1r, (54"x18"), BLK
6. ONE WAY — R6-1l, (54"x18"), BLK
7. R3-1, (30"x30"), WH
8. R3-2, (30"x30"), WH
9L. W1-8, (30"x36"), YE
9R. W1-8, (30"x36"), YE
10R / 10L. START CROSSING / Watch For Vehicles; DON'T START / Finish Crossing If Started; TIME REMAINING To Finish Crossing; DON'T CROSS; PUSH BUTTON / TO CROSS — R10-3e, (9"x15"), WH

10R (RIGHT ARROW)
10L (LEFT ARROW)

EXISITNG SIGN TO REMAIN

PROPOSED SIGN OR RELOCATE

* RAMPS - ADD 2"X48" RED STRIP TO POST

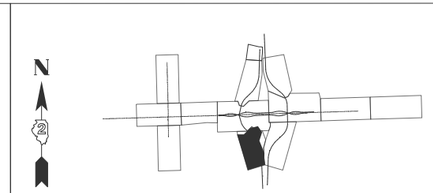

KEY MAP

MODEL: SHT_PLAN
FILE NAME: C:\Bentley\CONNECT10.11\Organization-Civil\IDOT_Standards\Civil\IDOT_Sheets.cel

HBM ENGINEERING GROUP, LLC

USER NAME =	DESIGNED - KAO	REVISED -	
	DRAWN - KAO	REVISED -	
	CHECKED - AMI	REVISED -	
PLOT DATE = 2/6/2025	DATE - 2/6/2025	REVISED -	

STATE OF ILLINOIS
DEPARTMENT OF TRANSPORTATION

PROPOSED SIGNAGE PLAN
S I-39 ON RAMP

SCALE: | SHEET 12 OF 15 SHEETS | STA. | TO STA. 76+00

F.A.* RTE.	SECTION	COUNTY	TOTAL SHEETS	SHEET NO.
*	141-1HBR-3 & (9,10) R-3	OGLE	508	253
		CONTRACT NO. 64N98		
	ILLINOIS	FED. AID PROJECT		

*FAI ROUTE 39 (I-39) & FAP 567 (IL 38)

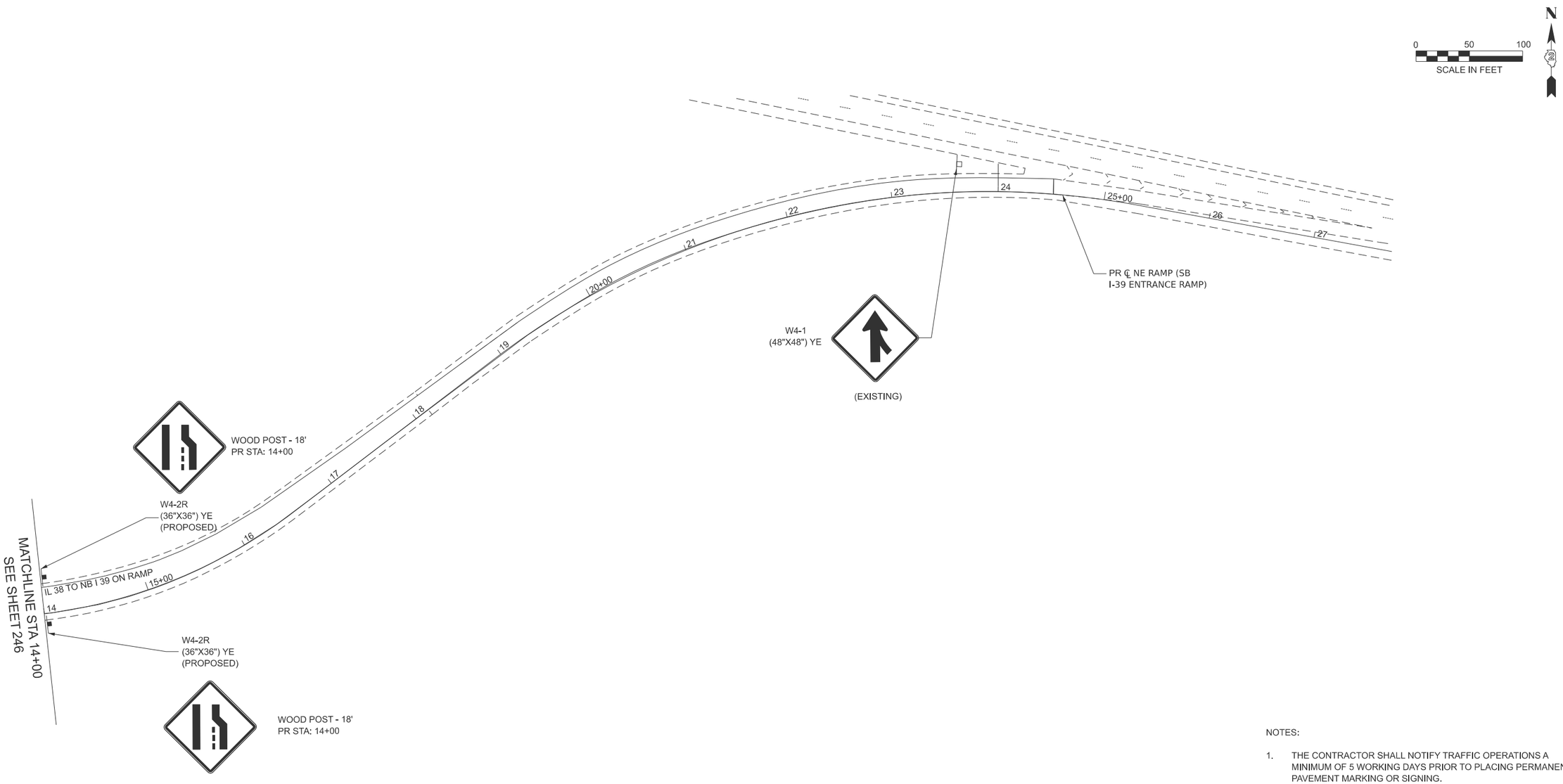

NOTES:

1. THE CONTRACTOR SHALL NOTIFY TRAFFIC OPERATIONS A MINIMUM OF 5 WORKING DAYS PRIOR TO PLACING PERMANENT PAVEMENT MARKING OR SIGNING.
2. POST LENGTHS ARE ESTIMATES FOR BIDDING PURPOSES ONLY. ACTUAL LENGTHS SHALL BE DETERMINED BY INSTALLING THE SIGNS AS SHOWN ON APPLICABLE STANDARDS.
3. SEE TRAFFIC SIGNAL GENERAL NOTES AND SIGNS, TRAFFIC SIGNAL MAST ARM AND SIGNAL POST SHEETS FOR SIGN PANEL LOCATIONS AND DETAILS.

LEGEND

1. DO NOT / ENTER — R5-1, RAMPS (48"x48")*, MEDIAN (36"X36"), WH/RE
2. NO TURNS — R3-3, (36"x36"), WH
3. NO TURN ON RED — R10-11b, MAST ARM (36"x36"), SIGNAL POST (24"X24"), WH
4. WRONG WAY — R5-1a, RAMPS (42"x30")*, IL 38 (36"X24"), RE
5. ONE WAY — R6-1r, (54"x18"), BLK
6. ONE WAY — R6-1l, (54"x18"), BLK
7. R3-1, (30"x30"), WH
8. R3-2, (30"x30"), WH
9L. W1-8, (30"x36"), YE
9R. W1-8, (30"x36"), YE
10R / 10L. START CROSSING Watch For Vehicles; DON'T START Finish Crossing If Started; TIME REMAINING To Finish Crossing; DON'T CROSS; PUSH BUTTON TO CROSS — R10-3e, (9"x15"), WH; 10R (RIGHT ARROW), 10L (LEFT ARROW)

EXISITNG SIGN TO REMAIN

PROPOSED SIGN OR RELOCATE

* RAMPS - ADD 2"X48" RED STRIP TO POST

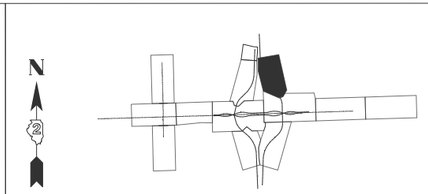

KEY MAP

MODEL: SHT_PLAN
FILE NAME: C:\Bentley\CONNECT10\11\Organization-Civil\IDOT_Standards\Cell\IDOT_Sheets.cel

HBM ENGINEERING GROUP, LLC

USER NAME =	DESIGNED - KAO	REVISED -	
	DRAWN - KAO	REVISED -	
	CHECKED - AMI	REVISED -	
PLOT DATE = 2/6/2025	DATE - 2/6/2025	REVISED -	

STATE OF ILLINOIS
DEPARTMENT OF TRANSPORTATION

PROPOSED SIGNAGE PLAN
N I-39 ON RAMP

SCALE: | SHEET 13 OF 15 SHEETS | STA. 14+00 TO STA.

F.A.* RTE.	SECTION	COUNTY	TOTAL SHEETS	SHEET NO.
*	141-1HBR-3 & (9,10) R-3	OGLE	508	254
		CONTRACT NO. 64N98		
	ILLINOIS	FED. AID PROJECT		

*FAI ROUTE 39 (I-39) & FAP 567 (IL 38)

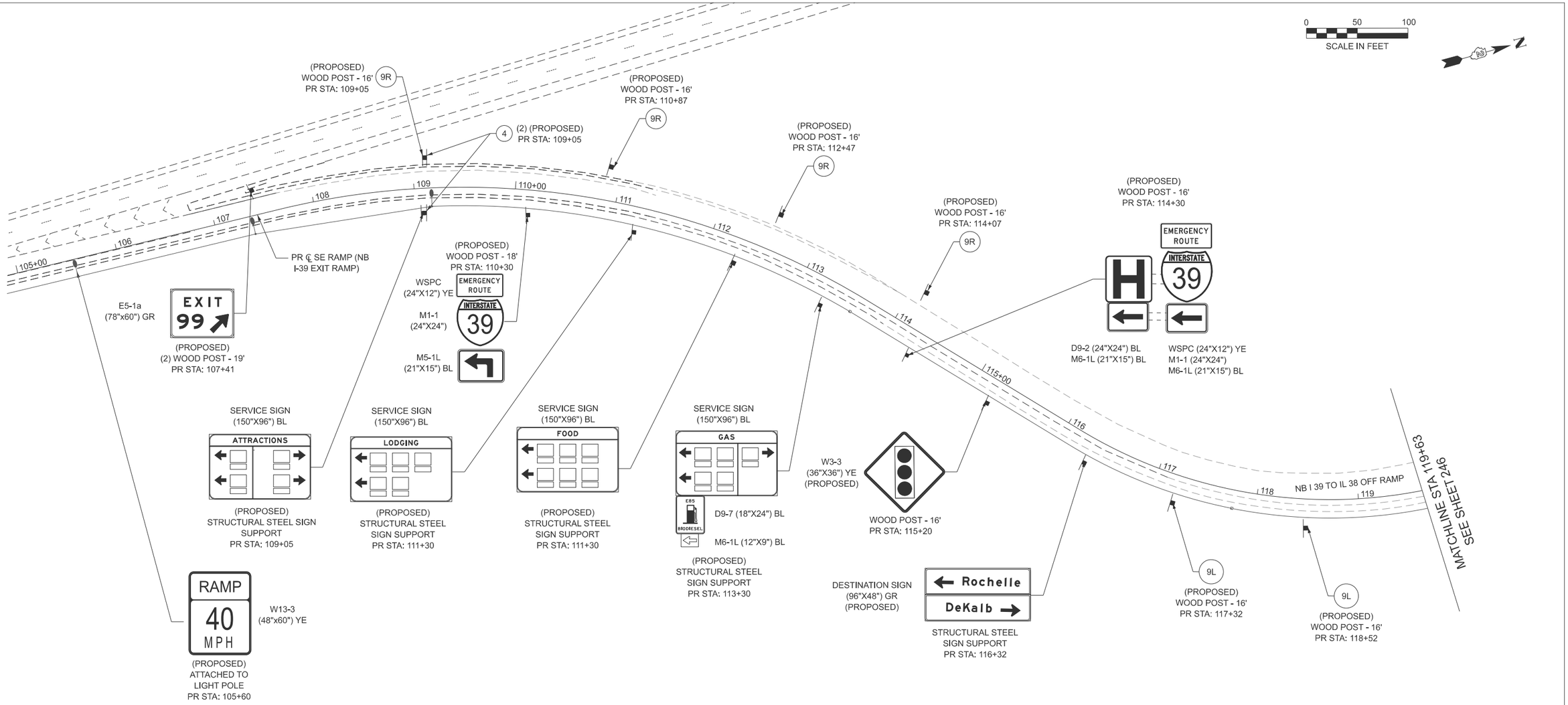

NOTES:

1. THE CONTRACTOR SHALL NOTIFY TRAFFIC OPERATIONS A MINIMUM OF 5 WORKING DAYS PRIOR TO PLACING PERMANENT PAVEMENT MARKING OR SIGNING.
2. POST LENGTHS ARE ESTIMATES FOR BIDDING PURPOSES ONLY. ACTUAL LENGTHS SHALL BE DETERMINED BY INSTALLING THE SIGNS AS SHOWN ON APPLICABLE STANDARDS.
3. SEE TRAFFIC SIGNAL GENERAL NOTES AND SIGNS, TRAFFIC SIGNAL MAST ARM AND SIGNAL POST SHEETS FOR SIGN PANEL LOCATIONS AND DETAILS.

LEGEND

1. DO NOT ENTER — R5-1, RAMPS (48"x48")*, MEDIAN (36"X36"), WH/RE
2. NO TURNS — R3-3, (36"x36"), WH
3. NO TURN ON RED — R10-11b, MAST ARM (36"x36"), SIGNAL POST (24"X24"), WH
4. WRONG WAY — R5-1a, RAMPS (42"x30")*, IL 38 (36"X24"), RE
5. ONE WAY — R6-1r, (54"x18"), BLK
6. ONE WAY — R6-1l, (54"x18"), BLK
7. R3-1, (30"x30"), WH
8. R3-2, (30"x30"), WH
9L. W1-8, (30"x36"), YE
9R. W1-8, (30"x36"), YE
10R, 10L. START CROSSING Watch For Vehicles; DON'T START Finish Crossing If Started; TIME REMAINING To Finish Crossing; DON'T CROSS; PUSH BUTTON TO CROSS — R10-3e, (9"x15"), WH

10R (RIGHT ARROW)
10L (LEFT ARROW)

EXISITNG SIGN TO REMAIN

PROPOSED SIGN OR RELOCATE

* RAMPS - ADD 2"X48" RED STRIP TO POST

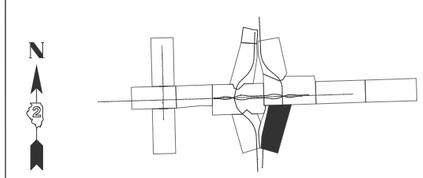

KEY MAP

MODEL: SHT_PLAN
FILE NAME: C:\Bentley\CONNECT10111\Organization-Civil\IDOT_Standards\Civil\IDOT_Sheets.cel

HBM ENGINEERING GROUP, LLC

USER NAME =	DESIGNED - KAO	REVISED -	
	DRAWN - KAO	REVISED -	
	CHECKED - AMI	REVISED -	
PLOT DATE = 2/6/2025	DATE - 2/6/2025	REVISED -	

STATE OF ILLINOIS
DEPARTMENT OF TRANSPORTATION

PROPOSED SIGNAGE PLAN
N I-39 OFF RAMP

SCALE: | SHEET 14 OF 15 SHEETS | STA. | TO STA. 119+63

F.A.* RTE.	SECTION	COUNTY	TOTAL SHEETS	SHEET NO.
*	141-1HBR-3 & (9,10) R-3	OGLE	508	255
		CONTRACT NO. 64N98		
		ILLINOIS	FED. AID PROJECT	

*FAI ROUTE 39 (I-39) & FAP 567 (IL 38)

0 50 100
SCALE IN FEET

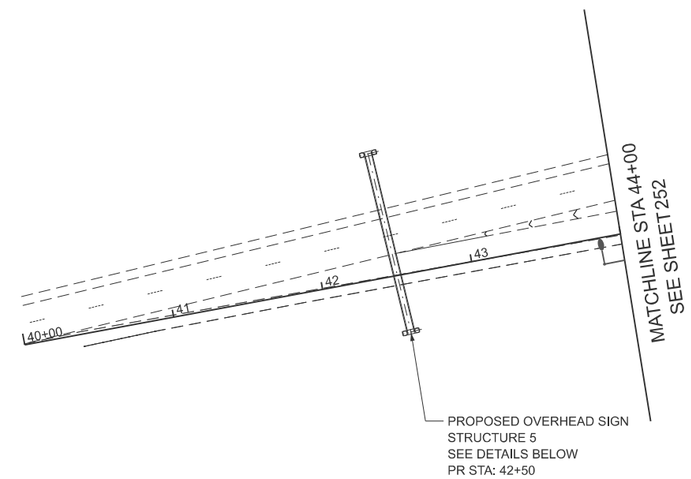

PROPOSED OVERHEAD SIGN STRUCTURE 5
PR STA: 42+50

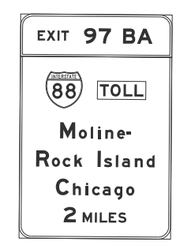

OVERHEAD (150"X204") GR

OVERHEAD (156"X150") GR

NOTES:

1. THE CONTRACTOR SHALL NOTIFY TRAFFIC OPERATIONS A MINIMUM OF 5 WORKING DAYS PRIOR TO PLACING PERMANENT PAVEMENT MARKING OR SIGNING.
2. POST LENGTHS ARE ESTIMATES FOR BIDDING PURPOSES ONLY. ACTUAL LENGTHS SHALL BE DETERMINED BY INSTALLING THE SIGNS AS SHOWN ON APPLICABLE STANDARDS.
3. SEE TRAFFIC SIGNAL GENERAL NOTES AND SIGNS, TRAFFIC SIGNAL MAST ARM AND SIGNAL POST SHEETS FOR SIGN PANEL LOCATIONS AND DETAILS.

LEGEND

(1) DO NOT ENTER — R5-1, RAMPS (48"x48")*, MEDIAN (36"X36"), WH/RE

(2) NO TURNS — R3-3, (36"x36"), WH

(3) NO TURN ON RED — R10-11b, MAST ARM (36"x36"), SIGNAL POST (24"X24"), WH

(4) WRONG WAY — R5-1a, RAMPS (42"x30")*, IL 38 (36"X24"), RE

(5) ONE WAY — R6-1r, (54"x18"), BLK

(6) ONE WAY — R6-1l, (54"x18"), BLK

(7) R3-1, (30"x30"), WH

(8) R3-2, (30"x30"), WH

(9L) W1-8, (30"x36"), YE

(9R) W1-8, (30"x36"), YE

(10R) (10L) START CROSSING Watch For Vehicles; DON'T START Finish Crossing If Started; TIME REMAINING To Finish Crossing; DON'T CROSS; PUSH BUTTON TO CROSS — R10-3e, (9"x15"), WH

10R (RIGHT ARROW)
10L (LEFT ARROW)

EXISITNG SIGN TO REMAIN

PROPOSED SIGN OR RELOCATE

* RAMPS - ADD 2"X48" RED STRIP TO POST

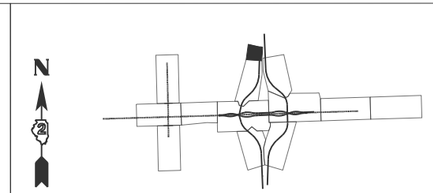

KEY MAP

MODEL: SHT_PLAN
FILE NAME: C:\Bentley\CONNECT10.11\Organization-Civil\IDOT_Standards\Civil\IDOT_Sheets.cel

HBM ENGINEERING GROUP, LLC

USER NAME =	DESIGNED - KAO	REVISED -	
	DRAWN - KAO	REVISED -	
	CHECKED - AMI	REVISED -	
PLOT DATE = 2/6/2025	DATE - 2/6/2025	REVISED -	

STATE OF ILLINOIS
DEPARTMENT OF TRANSPORTATION

PROPOSED SIGNAGE PLAN
S I-39 OFF RAMP

SCALE: | SHEET 15 OF 15 SHEETS | STA. | TO STA. 44+00

F.A.* RTE.	SECTION	COUNTY	TOTAL SHEETS	SHEET NO.
*	141-1HBR-3 & (9,10) R-3	OGLE	508	256
		CONTRACT NO. 64N98		
		ILLINOIS	FED. AID PROJECT	

*FAI ROUTE 39 (I-39) & FAP 567 (IL 38)

IL 38 STA 1656+86

OVERHEAD SIGN STRUCTURE 1
(PANEL 1A)

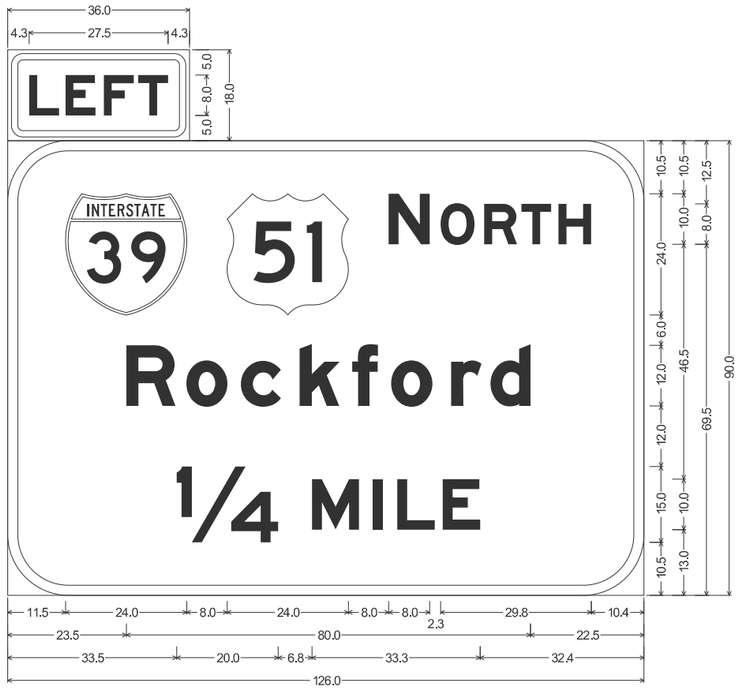

3.0" Radius, 1.3" Border, 0.8" Indent, Black on Yellow;
"LEFT", E Mod 2K;

12.0" Radius, 2.0" Border, White on Green;
Interstate 39 10.0" D 2K; "NORTH", E Mod 2K; "Rockford", E Mod 2K;
"¼" E Mod 2K " "Highway SignCAD Plus "MILE", E Mod 2K;
Table of letter and object lefts

L	E	F	T
4.3	11.5	19.0	25.9

39	51	N	O	R	T	H	
11.5	43.5	75.5	85.8	94.4	101.8	109.1	

R	o	c	k	f	o	r	d
23.5	35.4	46.1	57.8	68.3	75.9	87.8	95.6

¼	M	I	L	E
33.5	60.3	72.4	77.1	86.1

IL 38 STA 1656+86

OVERHEAD SIGN STRUCTURE 1
(PANEL 1B)

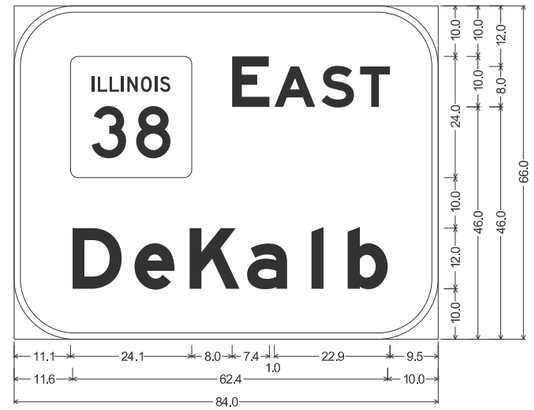

12.0" Radius, 1.3" Border, White on Green;
"EAST", E Mod 2K; "DeKalb", E Mod 2K;
Table of letter and object lefts

38	E	A	S	T	
11.1	43.1	51.5	60.9	68.5	

D	e	K	a	l	b	
11.6	23.9	34.8	46.1	58.9	66.1	

IL 38 STA 1656+86

OVERHEAD SIGN STRUCTURE 1
(PANEL 1C)

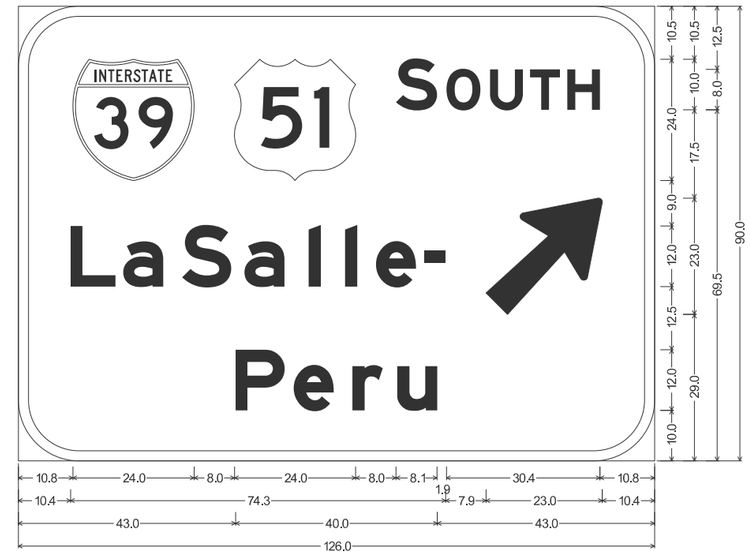

12.0" Radius, 2.0" Border, White on Green;
Interstate 39 10.0" D 2K; "SOUTH", E Mod 2K; "LaSalle-", E Mod 2K; Arrow Custom - 29.3" 45°; "Peru", E Mod 2K;
Table of letter and object lefts

39	51	S	O	U	T	H
10.8	42.8	74.8	84.8	93.4	101.4	108.8

L	a	S	a	l	l	e	-	↗
10.4	20.8	32.4	44.8	57.5	64.8	70.9	80.4	92.6

P	e	r	u
43.0	54.5	66.1	75.0

MODEL: SHT_PLAN
FILE NAME: C:\Bentley\CONNECT1011\Organization-Civil\IDOT_Standards\Cell\IDOT_Sheets.cel

HBM ENGINEERING GROUP, LLC

USER NAME =	DESIGNED - KAO	REVISED -	
	DRAWN - KAO	REVISED -	
	CHECKED - AMI	REVISED -	
PLOT DATE = 2/6/2025	DATE - 2/6/2025	REVISED -	

STATE OF ILLINOIS
DEPARTMENT OF TRANSPORTATION

PROPOSED SIGNING
SIGN PANEL DETAILS

SCALE: SHEET 1 OF 10 SHEETS STA. TO STA.

F.A.* RTE.	SECTION	COUNTY	TOTAL SHEETS	SHEET NO.
*	141-1HBR-3 & (9,10) R-3	OGLE	508	257
		CONTRACT NO. 64N98		
	ILLINOIS	FED. AID PROJECT		

*FAI ROUTE 39 (I-39) & FAP 567 (IL 38)

IL 38 STA 2659+41

GROUND MOUNTED SIGN 2

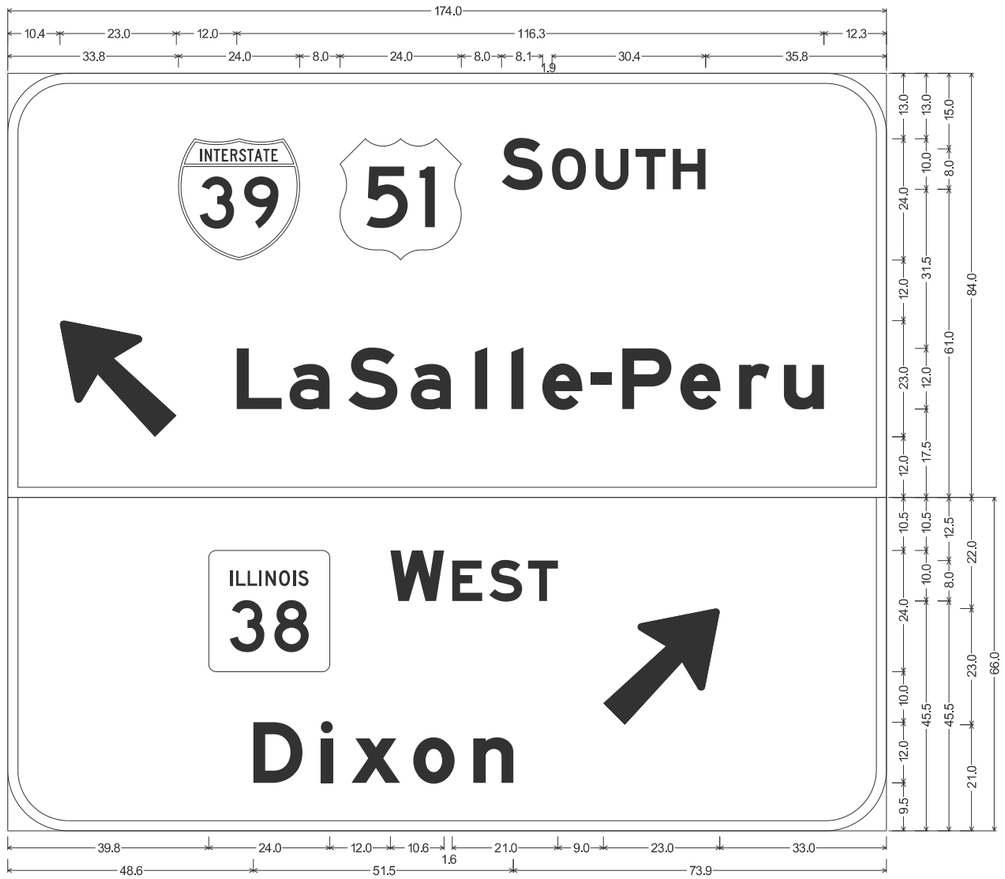

12.0" Radius, 2.0" Border, White on Green;
Interstate 39 10.0" D 2K; "SOUTH", E Mod 2K; Arrow Custom - 29.3" 135°; "LaSalle-Peru", E Mod 2K;

12.0" Radius, 2.0" Border, White on Green;
"WEST", E Mod 2K; "Dixon", E Mod 2K; Arrow Custom - 29.3" 45°;
Table of letter and object lefts

39	51	S	O	U	T	H
33.8	65.8	97.8	107.8	116.4	124.4	131.8

	L	a	S	a	l	l	e	-	P	e	r	u
10.4	45.4	55.8	67.5	79.8	92.5	99.8	105.9	115.5	121.8	133.3	144.9	153.8

38	W	E	S	T	
39.8	75.8	88.0	95.4	103.0	118.0

D	i	x	o	n
48.6	62.0	68.1	80.4	92.3

MODEL: SHT_PLAN
FILE NAME: C:\Bentley\CONNECT10.11\Organization-Civil\IDOT_Standards\Cell\IDOT_Sheets.cel

HBM ENGINEERING GROUP, LLC

USER NAME =	DESIGNED - KAO	REVISED -	
	DRAWN - KAO	REVISED -	
	CHECKED - AMI	REVISED -	
PLOT DATE = 2/6/2025	DATE - 2/6/2025	REVISED -	

STATE OF ILLINOIS
DEPARTMENT OF TRANSPORTATION

PROPOSED SIGNING
SIGN PANEL DETAILS

SCALE: SHEET 2 OF 10 SHEETS STA. TO STA.

F.A.* RTE.	SECTION	COUNTY	TOTAL SHEETS	SHEET NO.
*	141-1HBR-3 & (9,10) R-3	OGLE	508	258
		CONTRACT NO. 64N98		
	ILLINOIS	FED. AID PROJECT		

*FAI ROUTE 39 (I-39) & FAP 567 (IL 38)

IL 38 STA 1671+20

GROUND MOUNTED SIGN 3

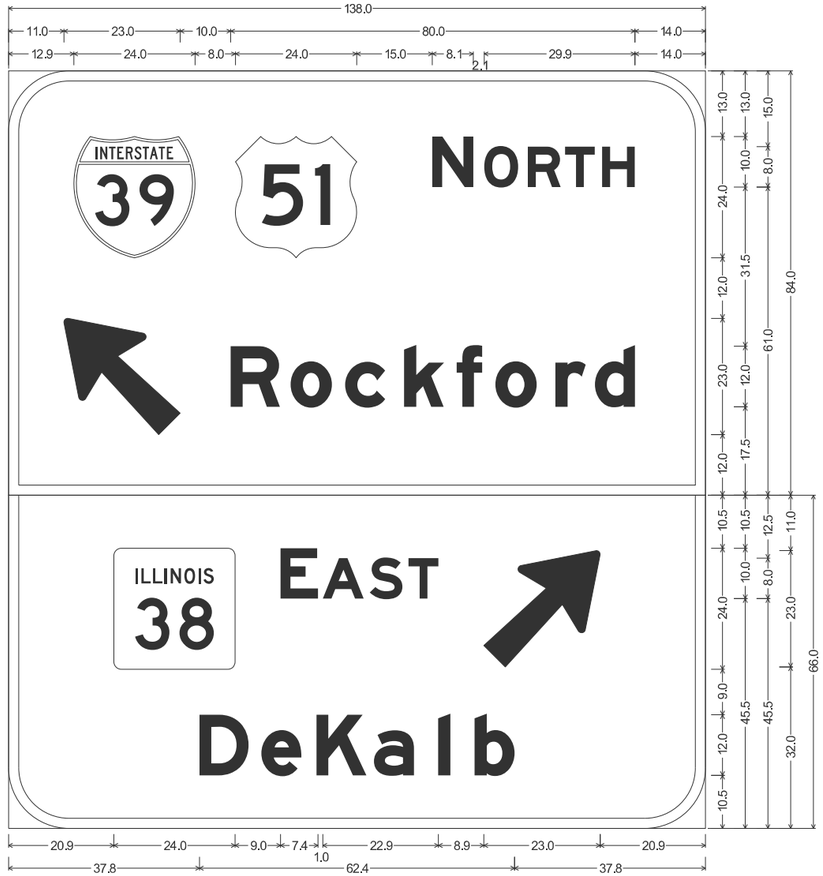

12.0" Radius, 2.0" Border, White on Green;
Interstate 39 10.0" D 2K; "NORTH", E Mod 2K; Arrow Custom - 29.3" 135°; "Rockford", E Mod 2K;

12.0" Radius, 2.0" Border, White on Green;
"EAST", E Mod 2K; Arrow Custom - 29.3" 45°; "DeKalb", E Mod 2K;
Table of letter and object lefts

39	51	N	O	R	T	H
12.9	44.9	83.9	94.1	102.9	110.1	117.5

	R	o	c	k	f	o	r	d
11.0	44.0	55.9	66.6	78.3	88.8	96.4	108.3	116.1

38	E	A	S	T	
20.9	53.9	62.3	71.5	79.3	94.1

D	e	K	a	l	b
37.8	50.0	61.0	72.4	85.1	92.3

MODEL: SHT_PLAN
FILE NAME: C:\Bentley\CONNECT10\1\Organization-Civil\IDOT_Standards\Civil\IDOT_Sheets.cel

HBM ENGINEERING GROUP, LLC

USER NAME =	DESIGNED - KAO	REVISED -	
	DRAWN - KAO	REVISED -	
	CHECKED - AMI	REVISED -	
PLOT DATE = 2/6/2025	DATE - 2/6/2025	REVISED -	

STATE OF ILLINOIS
DEPARTMENT OF TRANSPORTATION

PROPOSED SIGNING
SIGN PANEL DETAILS

SCALE: SHEET 3 OF 10 SHEETS STA. TO STA.

F.A.* RTE.	SECTION	COUNTY	TOTAL SHEETS	SHEET NO.
*	141-1HBR-3 & (9,10) R-3	OGLE	508	259
		CONTRACT NO. 64N98		
	ILLINOIS	FED. AID PROJECT		

*FAI ROUTE 39 (I-39) & FAP 567 (IL 38)

IL 38 STA 2673+91
OVERHEAD SIGN STRUCTURE 4
(PANEL 4A)

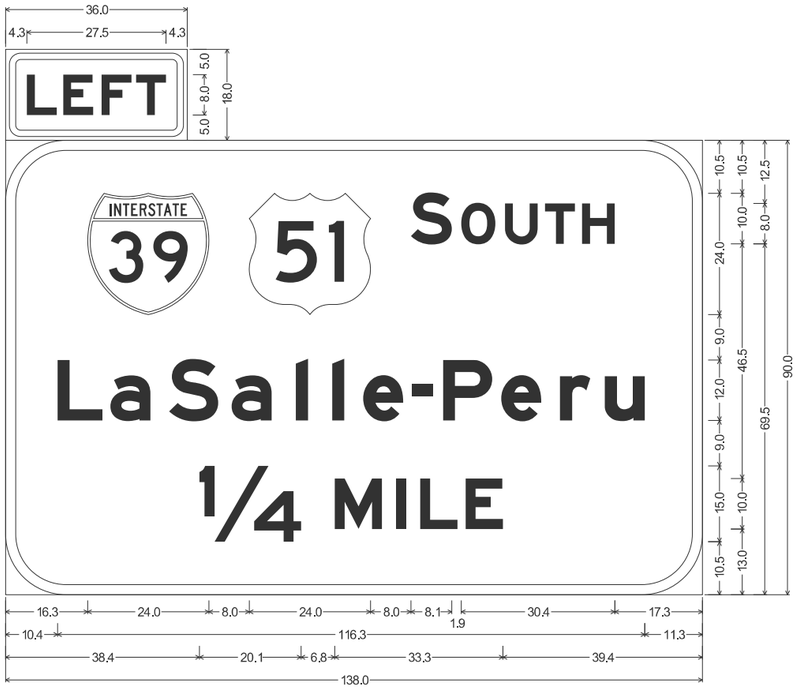

3.0" Radius, 1.3" Border, 0.8" Indent, Black on Yellow;
"LEFT", E Mod 2K;

12.0" Radius, 2.0" Border, White on Green;
Interstate 39 10.0" D 2K; "SOUTH", E Mod 2K; "LaSalle-Peru", E Mod 2K; "¼" E Mod 2K " "Highway SignCAD Plus "MILE", E Mod 2K;
Table of letter and object lefts

L	E	F	T
4.3	11.5	19.0	25.9

39	51	S	O	U	T	H
16.3	48.3	80.3	90.3	98.9	106.9	114.3

L	a	S	a	l	l	e	-	P	e	r	u
10.4	20.8	32.4	44.8	57.5	64.8	70.9	80.4	86.6	98.1	109.9	118.8

¼	M	I	L	E
38.4	65.3	77.4	82.1	91.1

IL 38 STA 2673+91
OVERHEAD SIGN STRUCTURE 4
(PANEL 4B)

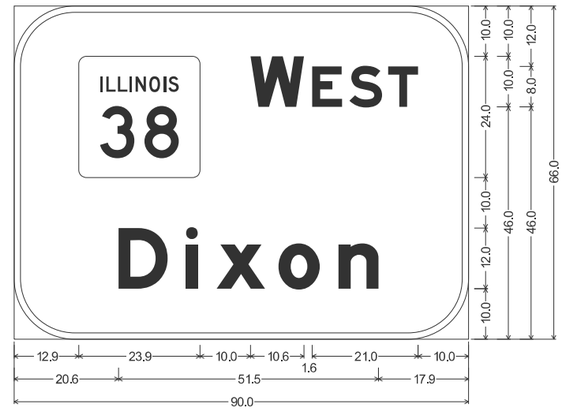

12.0" Radius, 1.3" Border, White on Green;
"WEST", E Mod 2K; "Dixon", E Mod 2K;
Table of letter and object lefts

38	W	E	S	T
12.9	46.9	59.0	66.4	74.1

D	i	x	o	n
20.6	34.0	40.1	52.4	64.3

IL 38 STA 2673+91
OVERHEAD SIGN STRUCTURE 4
(PANEL 4C)

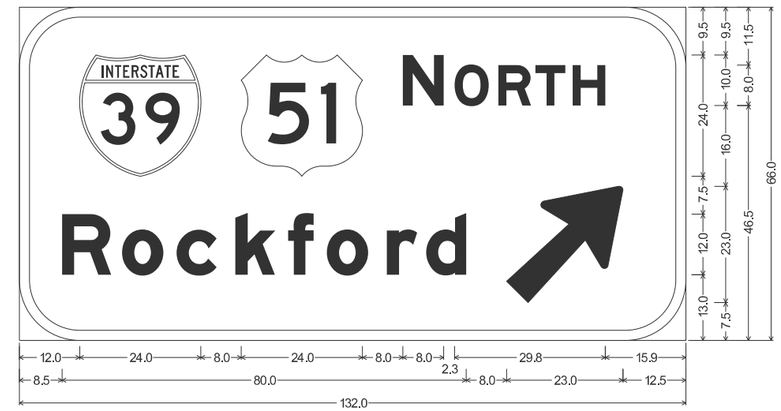

12.0" Radius, 2.0" Border, White on Green;
Interstate 39 10.0" D 2K; "NORTH", E Mod 2K; "Rockford", E Mod 2K; Arrow Custom - 29.3" 45°;
Table of letter and object lefts

39	51	N	O	R	T	H
12.0	44.0	76.0	86.3	94.9	102.3	109.6

R	o	c	k	f	o	r	d		
8.5	20.4	31.1	42.8	53.3	60.9	72.8	80.6		96.5

MODEL: SHT_PLAN
FILE NAME: C:\Bentley\CONNECT1011\Organization-Civil\IDOT_Standards\Cell\IDOT_Sheets.cel

HBM ENGINEERING GROUP, LLC

USER NAME =	DESIGNED - KAO	REVISED -	
	DRAWN - KAO	REVISED -	
	CHECKED - AMI	REVISED -	
PLOT DATE = 2/6/2025	DATE - 2/6/2025	REVISED -	

STATE OF ILLINOIS
DEPARTMENT OF TRANSPORTATION

PROPOSED SIGNING
SIGN PANEL DETAILS

SCALE: | SHEET 4 OF 10 SHEETS | STA. | TO STA.

F.A.* RTE.	SECTION	COUNTY	TOTAL SHEETS	SHEET NO.
*	141-1HBR-3 & (9,10) R-3	OGLE	508	260
		CONTRACT NO. 64N98		

ILLINOIS | FED. AID PROJECT

*FAI ROUTE 39 (I-39) & FAP 567 (IL 38)

I-39 SB STA 42+50

OVERHEAD SIGN STRUCTURE 5
(PANEL 5A)

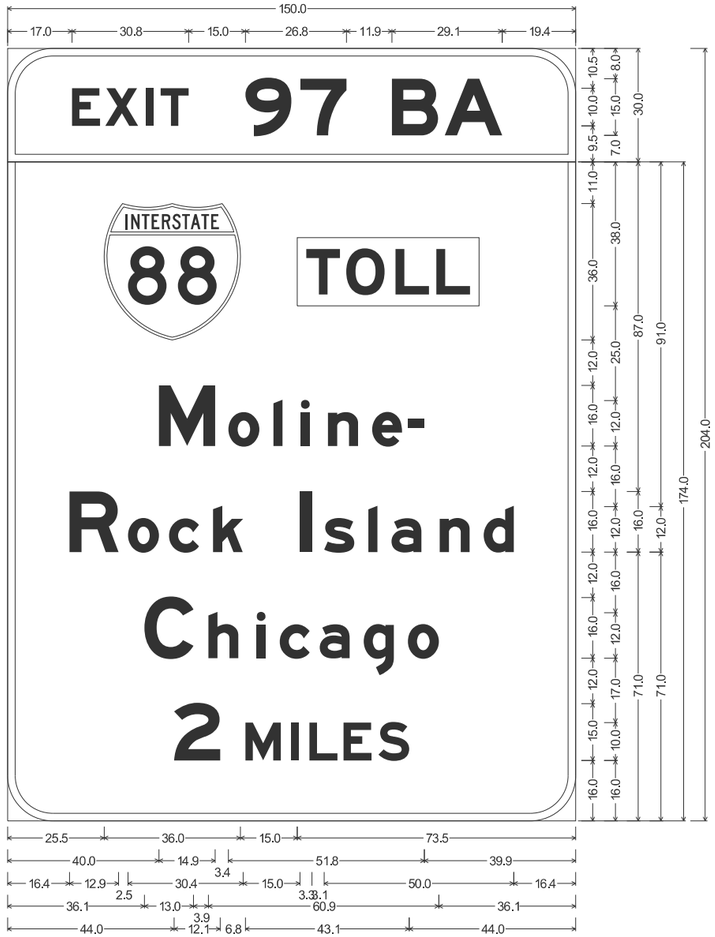

12.0" Radius, 2.0" Border, White on Green;
"EXIT 97 BA", E Mod 2K;

12.0" Radius, 2.0" Border, White on Green;
Interstate 88 15.0" D 2K; No border, White on Yellow;
"TOLL" Black, E Mod 2K;
"Moline-", E Mod 2K; "Rock Island", E Mod 2K; "Chicago", E Mod 2K;
"2" E Mod 2K " "Highway SignCAD Plus "MILES", E Mod 2K;
Table of letter and object lefts

E	X	I	T	9	7	B	A		
17.0	25.8	36.6	40.4	62.8	77.4	101.5	115.5		
88	▭								
25.5	76.5								
M	o	l	i	n	e	-			
40.0	58.4	70.3	77.4	84.6	96.3	105.9			
R	o	c	k	I	s	l	a	n	d
16.4	31.9	42.6	54.3	77.3	83.6	95.3	101.4	114.1	125.8
C	h	i	c	a	g	o			
36.1	53.0	65.8	71.9	82.4	94.0	105.8			
2	M	I	L	E	S				
44.0	62.9	74.9	79.8	88.8	97.9				

I-39 SB STA 42+50

OVERHEAD SIGN STRUCTURE 5
(PANEL 5B)

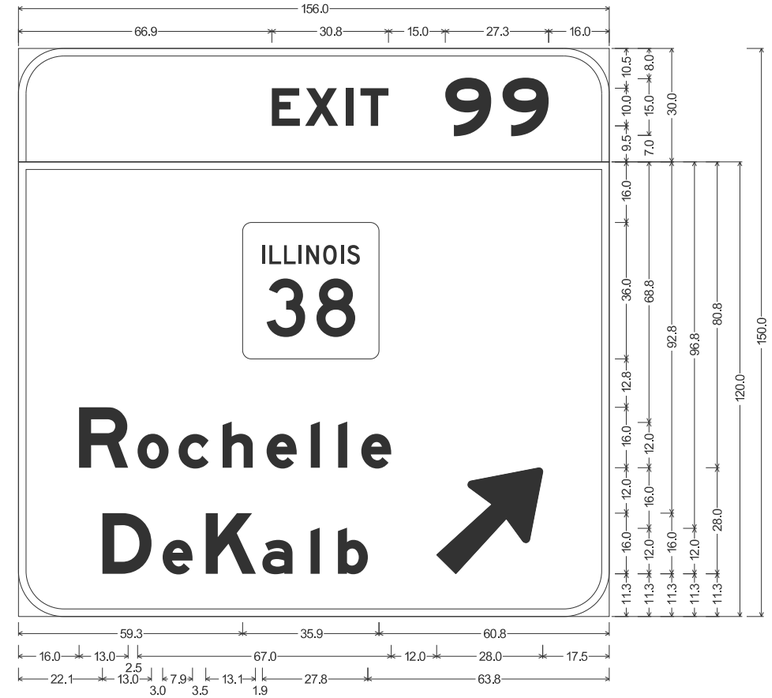

12.0" Radius, 2.0" Border, White on Green;
"EXIT 99", E Mod 2K;

12.0" Radius, 2.0" Border, White on Green;
"Rochelle", E Mod 2K; "DeKalb", E Mod 2K; Arrow Custom - 35.6" 45°;
Table of letter and object lefts

E	X	I	T	9	9			
66.9	75.8	86.5	90.3	112.8	127.9			
38								
59.3								
R	o	c	h	e	l	l	e	↗
16.0	31.5	42.3	53.9	65.5	77.3	84.4	90.5	110.5
D	e	K	a	l	b			
22.1	38.1	49.5	64.4	77.1	84.4			

MODEL: SHT_PLAN
FILE NAME: C:\Bentley\CONNECT10.11\Organization-Civil\IDOT_Standards\Civil\IDOT_Sheets.cel

HBM ENGINEERING GROUP, LLC

USER NAME =	DESIGNED - KAO	REVISED -	
	DRAWN - KAO	REVISED -	
	CHECKED - AMI	REVISED -	
PLOT DATE = 2/6/2025	DATE - 2/6/2025	REVISED -	

STATE OF ILLINOIS
DEPARTMENT OF TRANSPORTATION

PROPOSED SIGNING
SIGN PANEL DETAILS

SCALE: SHEET 5 OF 10 SHEETS STA. TO STA.

F.A.* RTE.	SECTION	COUNTY	TOTAL SHEETS	SHEET NO.
*	141-1HBR-3 & (9,10) R-3	OGLE	508	261

CONTRACT NO. 64N98

ILLINOIS | FED. AID PROJECT

*FAI ROUTE 39 (I-39) & FAP 567 (IL 38)

NW RAMP STA 49+20

GROUND MOUNTED SIGN STRUCTURE 6

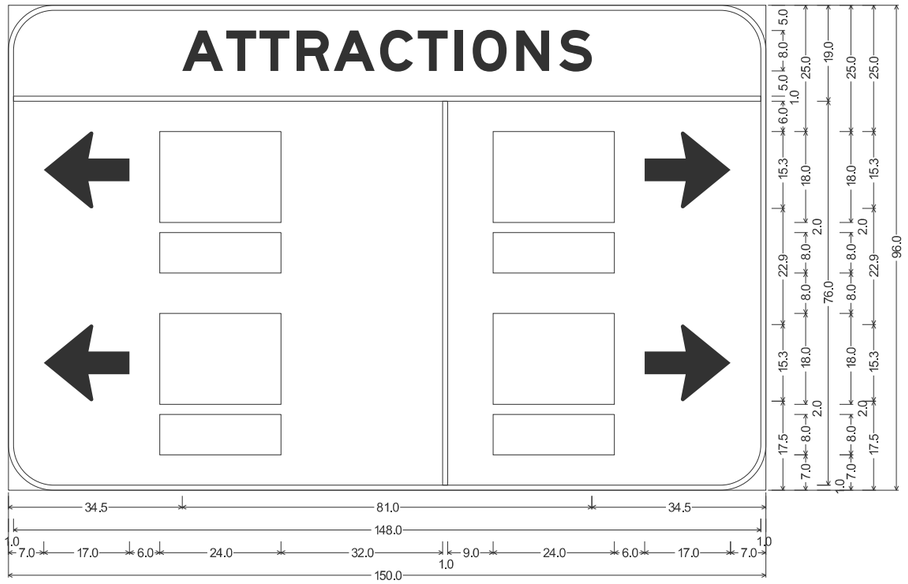

9.0" Radius, 1.0" Border, White on Blue;
"ATTRACTIONS", E Mod 2K; Standard Arrow Custom 17.0" X 15.3" 180°; Standard Arrow Custom 17.0" X 15.3" 180°;
Standard Arrow Custom 17.0" X 15.3" 0°; Standard Arrow Custom 17.0" X 15.3" 0°;
Table of letter and object lefts

A	T	T	R	A	C	T	I	O	N	S
34.5	43.1	49.8	57.1	64.5	73.6	81.1	88.5	92.0	100.6	109.1

1.0

7.0	30.0	86.0	96.0	126.0

7.0	30.0	96.0	126.0

30.0	96.0

30.0	96.0

NW RAMP STA 50+60

GROUND MOUNTED SIGN STRUCTURE 7

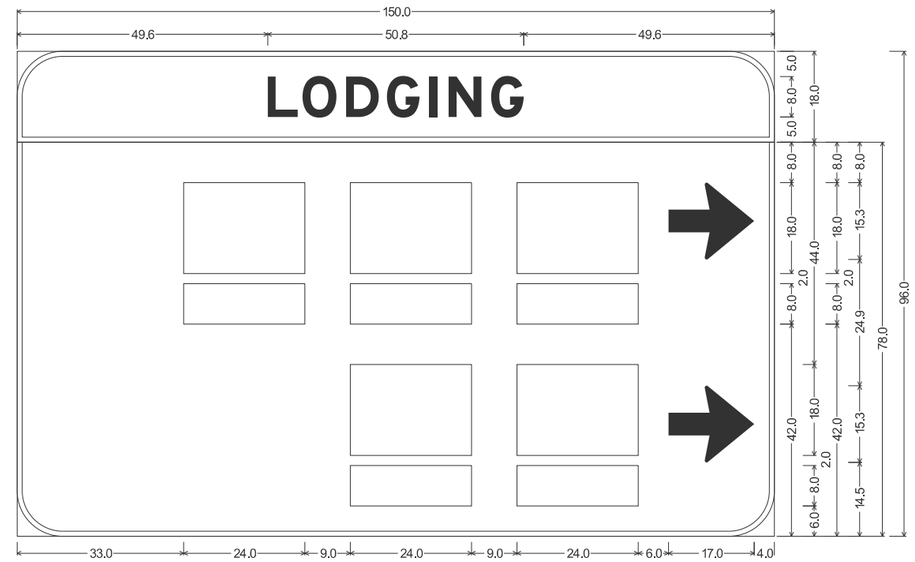

9.0" Radius, 1.0" Border, White on Blue;
"LODGING", E Mod 2K;

9.0" Radius, 1.0" Border, White on Blue;
Standard Arrow Custom 17.0" X 15.3" 0°; Standard Arrow Custom 17.0" X 15.3" 0°;
Table of letter and object lefts

L	O	D	G	I	N	G
49.6	56.5	65.1	73.3	81.6	85.5	93.9

33.0	66.0	99.0	129.0

33.0	66.0	99.0	129.0

66.0	99.0

66.0	99.0

MODEL: SHT_PLAN
FILE NAME: C:\Bentley\CONNECT10111\Organization-Civil\IDOT_Standards\CivilIDOT_Sheets.cel

HBM ENGINEERING GROUP, LLC

USER NAME =	DESIGNED - KAO	REVISED -	
	DRAWN - KAO	REVISED -	
	CHECKED - AMI	REVISED -	
PLOT DATE = 2/6/2025	DATE - 2/6/2025	REVISED -	

STATE OF ILLINOIS
DEPARTMENT OF TRANSPORTATION

PROPOSED SIGNING
SIGN PANEL DETAILS

SCALE: SHEET 6 OF 10 SHEETS STA. TO STA.

F.A.* RTE.	SECTION	COUNTY	TOTAL SHEETS	SHEET NO.
*	141-1HBR-3 & (9,10) R-3	OGLE	508	262

CONTRACT NO. 64N98

ILLINOIS FED. AID PROJECT

*FAI ROUTE 39 (I-39) & FAP 567 (IL 38)

NW RAMP STA 51+85

GROUND MOUNTED SIGN STRUCTURE 8

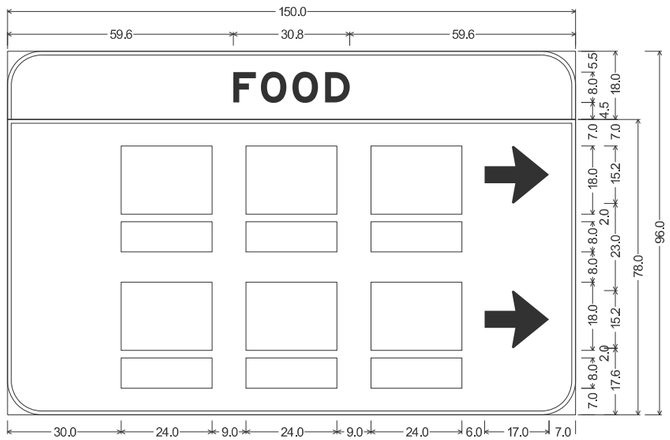

9.0" Radius, 1.0" Border, White on Blue;
"FOOD", E Mod 2K;

9.0" Radius, 1.0" Border, White on Blue;
Standard Arrow Custom 17.0" X 15.2" 0°; Standard Arrow Custom 17.0" X 15.2" 0°;
Table of letter and object lefts

F	O	O	D
59.6	66.9	75.2	83.9
30.0	63.0	96.0	126.0
30.0	63.0	96.0	126.0
30.0	63.0	96.0	
30.0	63.0	96.0	

NW RAMP STA 54+15

GROUND MOUNTED SIGN STRUCTURE 9

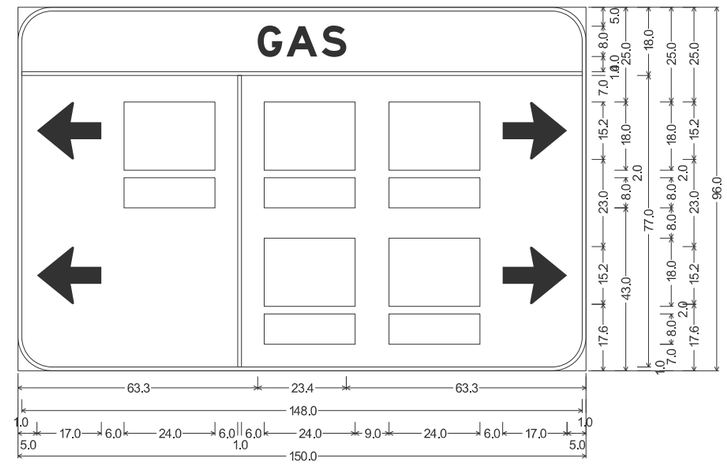

9.0" Radius, 1.0" Border, White on Blue;
"GAS", E Mod 2K; Standard Arrow Custom 17.0" X 15.2" 180°; Standard Arrow Custom 17.0" X 15.2" 180°;
Standard Arrow Custom 17.0" X 15.2" 0°; Standard Arrow Custom 17.0" X 15.2" 0°;
Table of letter and object lefts

G	A	S
63.3	70.9	80.2
1.0		
5.0	28.0	58.0	65.0	98.0	128.0
5.0	28.0	65.0	98.0	128.0
65.0	98.0
65.0	98.0

NW RAMP STA 56+23

GROUND MOUNTED SIGN STRUCTURE 10

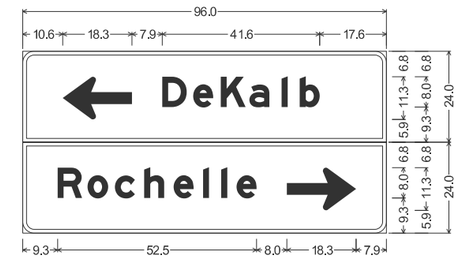

3.0" Radius, 1.0" Border, White on Green;
Standard Arrow Custom 18.3" X 11.3" 180°; "DeKalb", E Mod 2K;

3.0" Radius, 1.0" Border, White on Green;
"Rochelle", E Mod 2K; Standard Arrow Custom 18.3" X 11.3" 0°;
Table of letter and object lefts

	D	e	K	a	l	b		
10.6	36.9	45.0	52.3	59.9	68.4	73.1		
R	o	c	h	e	l	l	e	
9.3	17.1	24.3	32.1	39.9	47.6	52.4	56.5	69.8

MODEL: SHT_PLAN
FILE NAME: C:\Bentley\CONNECT10111\Organization-Civil\IDOT_Standards\Cell\IDOT_Sheets.cel

HBM ENGINEERING GROUP, LLC

USER NAME =	DESIGNED - KAO	REVISED -	
	DRAWN - KAO	REVISED -	
	CHECKED - AMI	REVISED -	
PLOT DATE = 2/6/2025	DATE - 2/6/2025	REVISED -	

STATE OF ILLINOIS
DEPARTMENT OF TRANSPORTATION

PROPOSED SIGNING
SIGN PANEL DETAILS

SCALE: SHEET 7 OF 10 SHEETS STA. TO STA.

F.A.* RTE.	SECTION	COUNTY	TOTAL SHEETS	SHEET NO.
*	141-1HBR-3 & (9,10) R-3	OGLE	508	263
		CONTRACT NO. 64N98		
	ILLINOIS	FED. AID PROJECT		

*FAI ROUTE 39 (I-39) & FAP 567 (IL 38)

SE RAMP STA 109+05

GROUND MOUNTED SIGN STRUCTURE 11

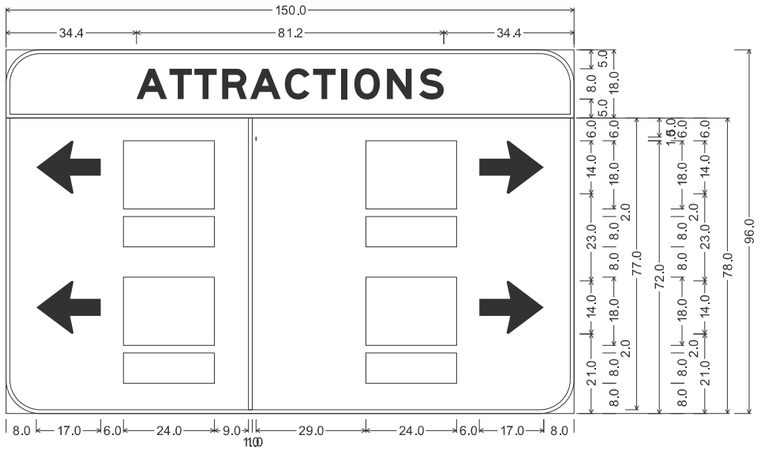

9.0" Radius, 1.0" Border, White on Blue;
"ATTRACTIONS", E Mod 2K;

9.0" Radius, 1.0" Border, White on Blue;
Standard Arrow Custom 17.0" X 14.0" 180°; Standard Arrow Custom 17.0" X 14.0" 180°;
Standard Arrow Custom 17.0" X 14.0" 0°; Standard Arrow Custom 17.0" X 14.0" 0°;
Table of letter and object lefts

A	T	T	R	A	C	T	I	O	N	S
34.4	43.2	49.7	57.1	64.4	73.6	81.1	88.4	92.0	100.6	109.1

⇦	□	|	|	□	⇨
8.0	31.0	64.0	66.0	95.0	125.0

⇦	▭	▭	⇨
8.0	31.0	95.0	125.0

□	□
31.0	95.0

▭	▭
31.0	95.0

SE RAMP STA 111+30

GROUND MOUNTED SIGN STRUCTURE 12

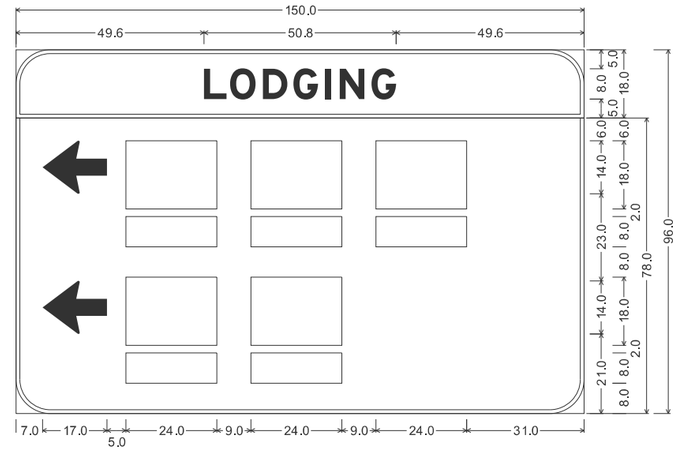

9.0" Radius, 1.0" Border, White on Blue;
"LODGING", E Mod 2K;

9.0" Radius, 1.0" Border, White on Blue;
Standard Arrow Custom 17.0" X 14.0" 180°; Standard Arrow Custom 17.0" X 14.0" 180°;
Table of letter and object lefts

L	O	D	G	I	N	G
49.6	56.5	65.2	73.2	81.6	85.5	93.9

⇦	□	□	□
7.0	29.0	62.0	95.0

⇦	▭	▭	▭
7.0	29.0	62.0	95.0

□	□
29.0	62.0

▭	▭
29.0	62.0

NW RAMP STA 47+50
SE RAMP STA 107+41

POST MOUNTED SIGN

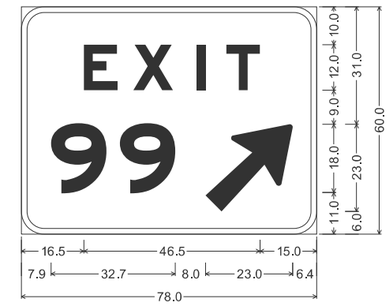

6.0" Radius, 1.5" Border, White on Green;
"EXIT", E Mod 2K 250% spacing;
"99", E Mod 2K; Arrow Custom - 29.3" 45°;
Table of letter and object lefts

E	X	I	T
16.5	29.6	46.3	54.1

9	9	↗
7.9	26.0	48.6

MODEL: SHT_PLAN
FILE NAME: C:\Bentley\CONNECT10.11\Organization-Civil\IDOT_Standards\Cell\IDOT_Sheets.cel

HBM ENGINEERING GROUP, LLC

USER NAME =	DESIGNED - KAO	REVISED -	
	DRAWN - KAO	REVISED -	
	CHECKED - AMI	REVISED -	
PLOT DATE = 2/6/2025	DATE - 2/6/2025	REVISED -	

STATE OF ILLINOIS
DEPARTMENT OF TRANSPORTATION

PROPOSED SIGNING
SIGN PANEL DETAILS

SCALE: | SHEET 8 OF 10 SHEETS | STA. | TO STA.

F.A.* RTE.	SECTION	COUNTY	TOTAL SHEETS	SHEET NO.
*	141-1HBR-3 & (9,10) R-3	OGLE	508	264
		CONTRACT NO. 64N98		
	ILLINOIS	FED. AID PROJECT		

*FAI ROUTE 39 (I-39) & FAP 567 (IL 38)

SE RAMP STA 112+30

GROUDN MOUNTED SIGN STRUCTURE 13

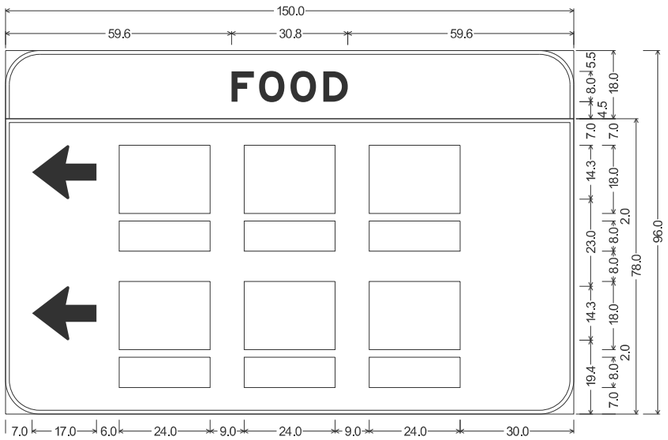

9.0" Radius, 1.0" Border, White on Blue;
"FOOD", E Mod 2K;

9.0" Radius, 1.0" Border, White on Blue;
Standard Arrow Custom 17.0" X 14.3" 180°; Standard Arrow Custom 17.0" X 14.3" 180°;
Table of letter and object lefts

F	O	O	D
59.6	66.9	75.3	83.9
⇦	▭	▭	▭
7.0	30.0	63.0	96.0
⇦	▭	▭	▭
7.0	30.0	63.0	96.0
▭	▭	▭	
30.0	63.0	96.0	
▭	▭	▭	
30.0	63.0	96.0	

SE RAMP STA 113+30

GROUDN MOUNTED SIGN STRUCTURE 14

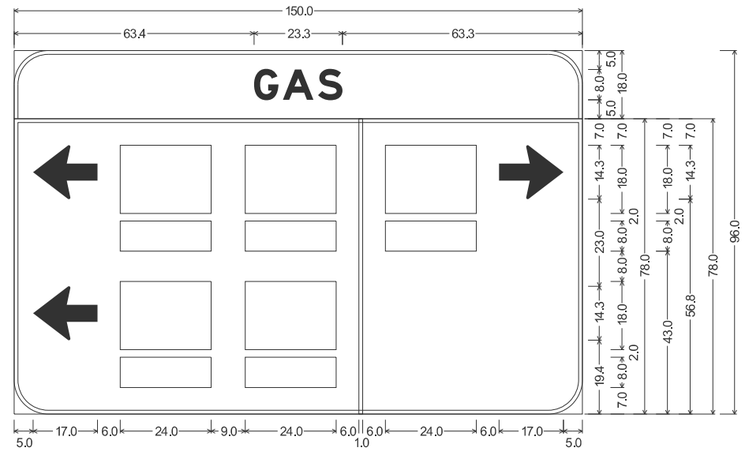

9.0" Radius, 1.0" Border, White on Blue;
"GAS", E Mod 2K;

9.0" Radius, 1.0" Border, White on Blue;
Standard Arrow Custom 17.0" X 14.3" 180°; Standard Arrow Custom 17.0" X 14.3" 180°;
Standard Arrow Custom 17.0" X 14.3" 0°;
Table of letter and object lefts

G	A	S
63.4	70.9	80.3

⇦	▭	▭	|	▭	⇨
5.0	28.0	61.0	91.0	98.0	128.0
⇦	▭	▭	▭		
5.0	28.0	61.0	98.0		
▭	▭				
28.0	61.0				
▭	▭				
28.0	61.0				

SE RAMP STA 116+32

GROUDN MOUNTED SIGN STRUCTURE 15

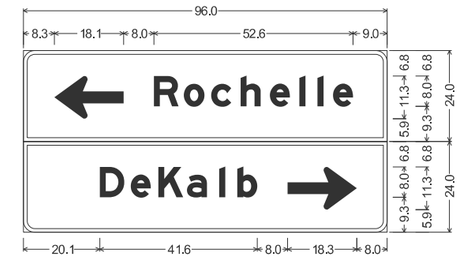

3.0" Radius, 1.0" Border, White on Green;
Standard Arrow Custom 18.3" X 11.3" 180°; "Rochelle", E Mod 2K;

3.0" Radius, 1.0" Border, White on Green;
"DeKalb", E Mod 2K; Standard Arrow Custom 18.3" X 11.3" 0°;
Table of letter and object lefts

⇦	R	o	c	h	e	l	l	e	
8.3	34.5	42.4	49.5	57.4	65.1	72.9	77.6	81.8	
D	e	K	a	l	b	⇨			
20.1	28.3	35.6	43.3	51.6	56.5	69.8			

MODEL: SHT_PLAN
FILE NAME: C:\Bentley\CONNECT10\1\Organization-Civil\IDOT_Standards\Civil\IDOT_Sheets.cel

HBM ENGINEERING GROUP, LLC

USER NAME =	DESIGNED - KAO	REVISED -	
	DRAWN - KAO	REVISED -	
	CHECKED - AMI	REVISED -	
PLOT DATE = 2/6/2025	DATE - 2/6/2025	REVISED -	

STATE OF ILLINOIS
DEPARTMENT OF TRANSPORTATION

PROPOSED SIGNING
SIGN PANEL DETAILS

SCALE: | SHEET 9 OF 10 SHEETS | STA. | TO STA.

F.A.* RTE.	SECTION	COUNTY	TOTAL SHEETS	SHEET NO.
*	141-1HBR-3 & (9,10) R-3	OGLE	508	265
		CONTRACT NO. 64N98		
	ILLINOIS	FED. AID PROJECT		

*FAI ROUTE 39 (I-39) & FAP 567 (IL 38)

ADOPT A HIGHWAY
POST MOUNTED

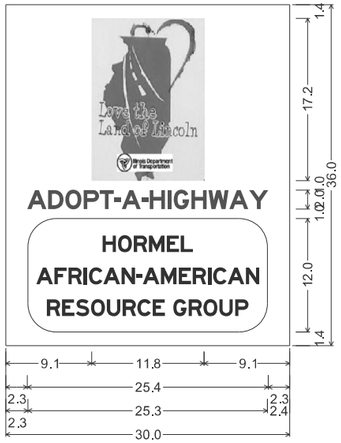

No border, White on White;
"ADOPT-A-HIGHWAY" Green, E Mod 2K 50% spacing;
Rounded Rectangle 3.0" Radius;
Table of letter and object lefts

9.1														
A	D	O	P	T	-	A	-	H	I	G	H	W	A	Y
2.3	4.5	6.3	8.2	9.9	11.5	12.2	14.3	15.2	17.1	17.7	19.6	21.4	23.6	25.7
2.3														

IL ROUTE 38
MAST ARM MOUNTED

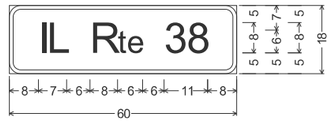

3" Radius, 1" Border, White on Green;
"IL Rte 38", Highway SignCAD Plus 62% spacing;
Table of letter and object lefts

I	L	R	t	e	3	8	
8	10	21	29	31	41	47	

DEMENT RD
MAST ARM MOUNTED

3" Radius, 1" Border, White on Green;
"Dement Rd", Highway SignCAD Plus 62% spacing;
Table of letter and object lefts

D	e	m	e	n	t	R	d
7	14	18	25	30	34	42	49

HISTORICAL ROUTE
POST MOUNTED

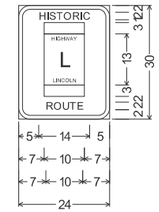

3" Radius, 1" Border, Black on White;
"HISTORIC", Highway SignCAD Plus;
Rectangle Red;
Rectangle White;
Rectangle Blue;
"ROUTE", Highway SignCAD Plus;
Table of letter and object lefts

H	I	S	T	O	R	I	C
5	7	8	10	12	14	16	17
7							
7							
7							
R	O	U	T	E			
7	9	11	13	15			

E85 BIODIESEL AND ARROW
POST MOUNTED

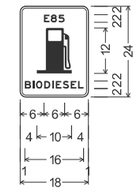

2" Radius, 1" Border, White on Blue;
"E85", E Mod 2K;
Symbol RM060;
"BIODIESEL", E Mod 2K;
Table of letter and object lefts

E	8	5							
6	8	10							
4									
B	I	O	D	I	E	S	E	L	
1	3	4	6	8	9	11	13	15	

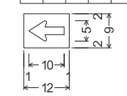

No border, White on Blue;
Standard Arrow 2 9" X 5" 180°;
Table of letter and object lefts

1

MODEL: SHT_PLAN
FILE NAME: C:\Bentley\CONNECT10\1\Organization-Civil\IDOT_Standards\Civil\IDOT_Sheets.cel

HBM ENGINEERING GROUP, LLC

USER NAME =	DESIGNED - KAO	REVISED -
	DRAWN - KAO	REVISED -
	CHECKED - AMI	REVISED -
PLOT DATE = 2/6/2025	DATE - 2/6/2025	REVISED -

STATE OF ILLINOIS
DEPARTMENT OF TRANSPORTATION

PROPOSED SIGNING
SIGN PANEL DETAILS

SCALE: | SHEET 10 OF 10 SHEETS | STA. | TO STA.

F.A.* RTE.	SECTION	COUNTY	TOTAL SHEETS	SHEET NO.
*	141-1HBR-3 & (9,10) R-3	OGLE	508	266
		CONTRACT NO. 64N98		
	ILLINOIS	FED. AID PROJECT		

*FAI ROUTE 39 (I-39) & FAP 567 (IL 38)

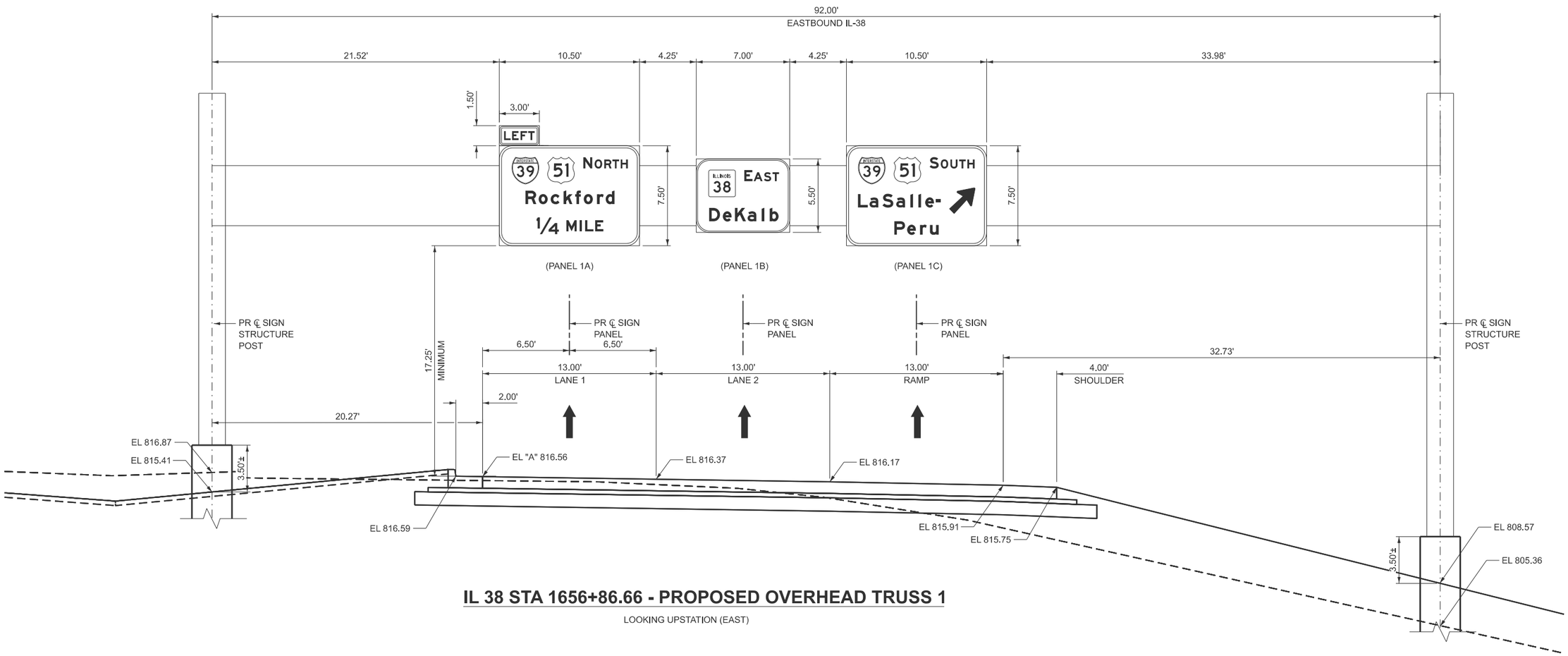

IL 38 STA 1656+86.66 - PROPOSED OVERHEAD TRUSS 1

LOOKING UPSTATION (EAST)

MODEL: SHT_PLAN
FILE NAME: C:\Bentley\CONNECT1011\Organization-Civil\IDOT_Standards\Cell\IDOT_Sheets.cel

HBM ENGINEERING GROUP, LLC

USER NAME =	DESIGNED - KAO	REVISED -	
	DRAWN - KAO	REVISED -	
	CHECKED - AMI	REVISED -	
PLOT DATE = 2/6/2025	DATE - 2/6/2025	REVISED -	

STATE OF ILLINOIS
DEPARTMENT OF TRANSPORTATION

PROPOSED SIGNING
ELEVATION VIEWS

SCALE: SHEET 1 OF 9 SHEETS STA. TO STA.

F.A.* RTE.	SECTION	COUNTY	TOTAL SHEETS	SHEET NO.
*	141-1HBR-3 & (9,10) R-3	OGLE	508	267
		CONTRACT NO. 64N98		
	ILLINOIS	FED. AID PROJECT		

*FAI ROUTE 39 (I-39) & FAP 567 (IL 38)

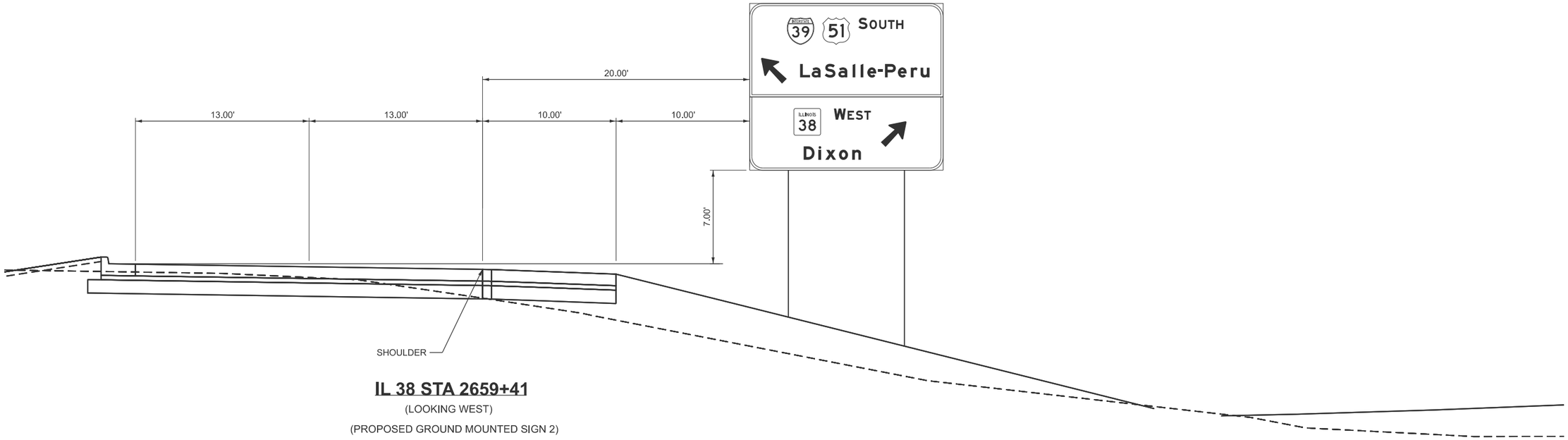

IL 38 STA 2659+41

(LOOKING WEST)

(PROPOSED GROUND MOUNTED SIGN 2)

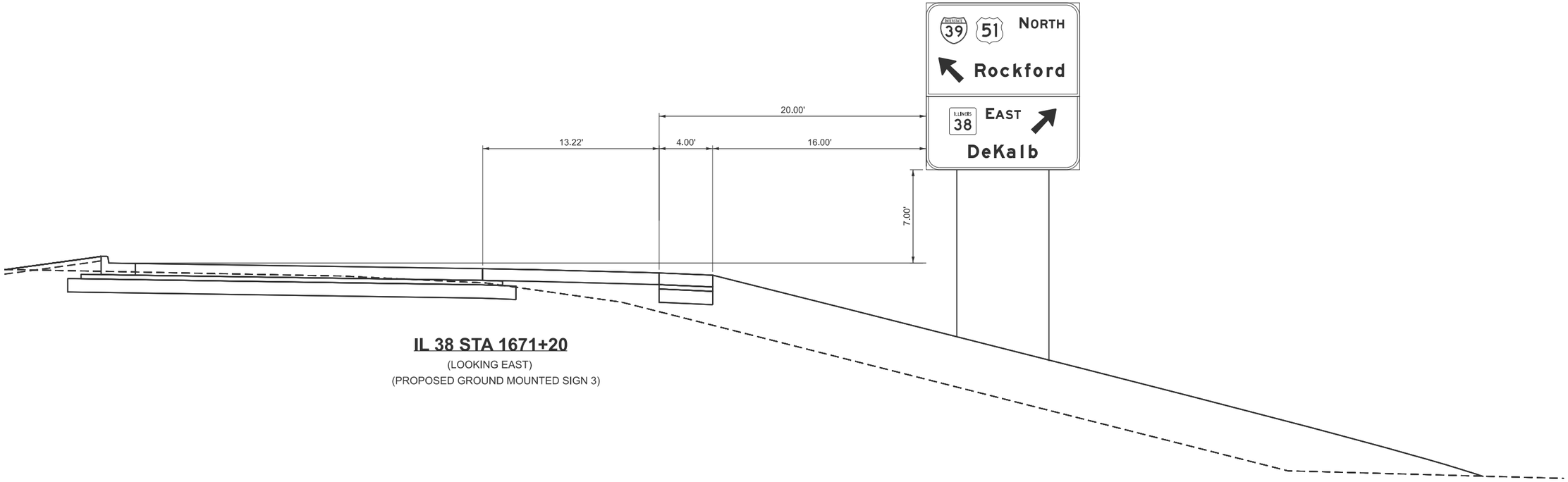

IL 38 STA 1671+20

(LOOKING EAST)

(PROPOSED GROUND MOUNTED SIGN 3)

MODEL: SHT_PLAN
FILE NAME: C:\Bentley\CONNECT1011\Organization-Civil\IDOT_Standards\Cell\IDOT_Sheets.cel

HBM ENGINEERING GROUP, LLC	USER NAME =	DESIGNED - KAO	REVISED -	STATE OF ILLINOIS DEPARTMENT OF TRANSPORTATION	PROPOSED SIGNING ELEVATION VIEWS	F.A.* RTE.	SECTION	COUNTY	TOTAL SHEETS / SHEET NO.
		DRAWN - KAO	REVISED -			*	141-1HBR-3 & (9,10) R-3	OGLE	508 / 268
		CHECKED - AMI	REVISED -					CONTRACT NO. 64N98	
	PLOT DATE = 2/6/2025	DATE - 2/6/2025	REVISED -		SCALE: SHEET 2 OF 9 SHEETS STA. TO STA.		ILLINOIS FED. AID PROJECT		

*FAI ROUTE 39 (I-39) & FAP 567 (IL 38)

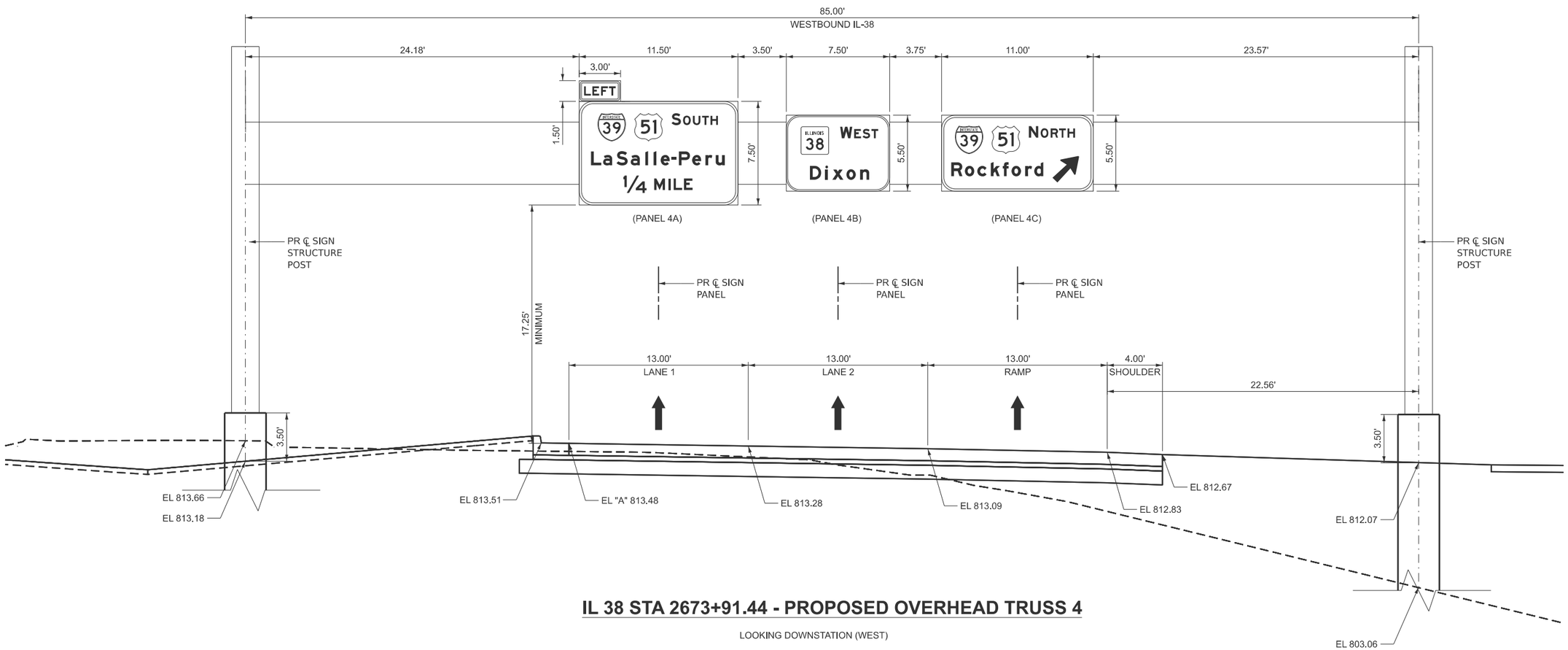

IL 38 STA 2673+91.44 - PROPOSED OVERHEAD TRUSS 4

LOOKING DOWNSTATION (WEST)

MODEL: SHT_PLAN
FILE NAME: C:\Bentley\CONNECT10110\Organization~Civil\IDOT_Standards\Cell\IDOT_Sheets.cel

HBM ENGINEERING GROUP, LLC

USER NAME =	DESIGNED - KAO	REVISED -	
	DRAWN - KAO	REVISED -	
	CHECKED - AMI	REVISED -	
PLOT DATE = 2/6/2025	DATE - 2/6/2025	REVISED -	

STATE OF ILLINOIS
DEPARTMENT OF TRANSPORTATION

PROPOSED SIGNING
ELEVATION VIEWS

SCALE: SHEET 3 OF 9 SHEETS STA. TO STA.

F.A.* RTE.	SECTION	COUNTY	TOTAL SHEETS	SHEET NO.
*	141-1HBR-3 & (9,10) R-3	OGLE	508	269
		CONTRACT NO. 64N98		
		ILLINOIS	FED. AID PROJECT	

*FAI ROUTE 39 (I-39) & FAP 567 (IL 38)

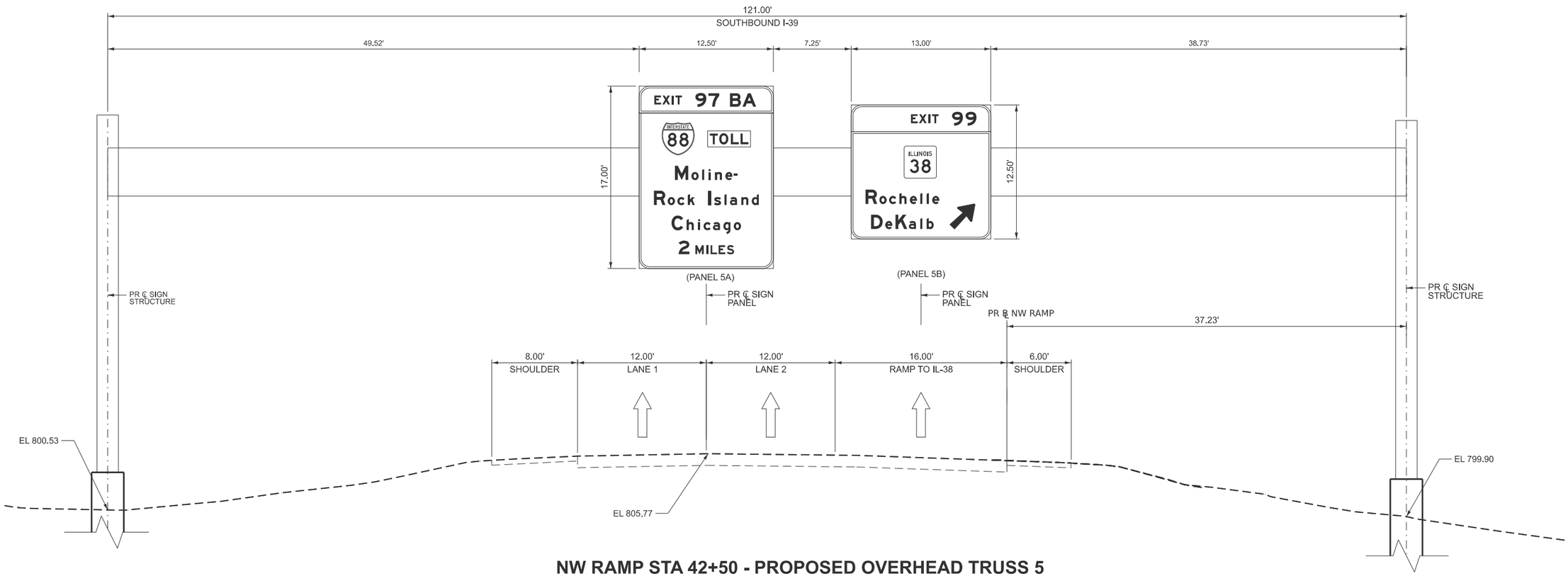

NW RAMP STA 42+50 - PROPOSED OVERHEAD TRUSS 5

LOOKING UPSTATION (NORTH)

NOTE:

CROSS SECTION TAKEN ALONG HYPOTHETICAL ℄ OF I-39. NW RAMP STATION 42+50 IS WHERE THE PROPOSED ℄ OF TRUSS MEETS THE EOP. SEE OHSS PLANS FOR MORE DETAILS.

MODEL: SHT_PLAN
FILE NAME: C:\Bentley\CONNECT10\1\Organization-Civil\IDOT_Standards\Cell\IDOT_Sheets.cel

HBM ENGINEERING GROUP, LLC

USER NAME =	DESIGNED - KAO	REVISED -	
	DRAWN - KAO	REVISED -	
	CHECKED - AMI	REVISED -	
PLOT DATE = 2/6/2025	DATE - 2/6/2025	REVISED -	

STATE OF ILLINOIS
DEPARTMENT OF TRANSPORTATION

PROPOSED SIGNING
ELEVATION VIEWS

SCALE: SHEET 4 OF 9 SHEETS STA. TO STA.

F.A.* RTE.	SECTION	COUNTY	TOTAL SHEETS	SHEET NO.
*	141-1HBR-3 & (9,10) R-3	OGLE	508	270
		CONTRACT NO. 64N98		
	ILLINOIS	FED. AID PROJECT		

*FAI ROUTE 39 (I-39) & FAP 567 (IL 38)

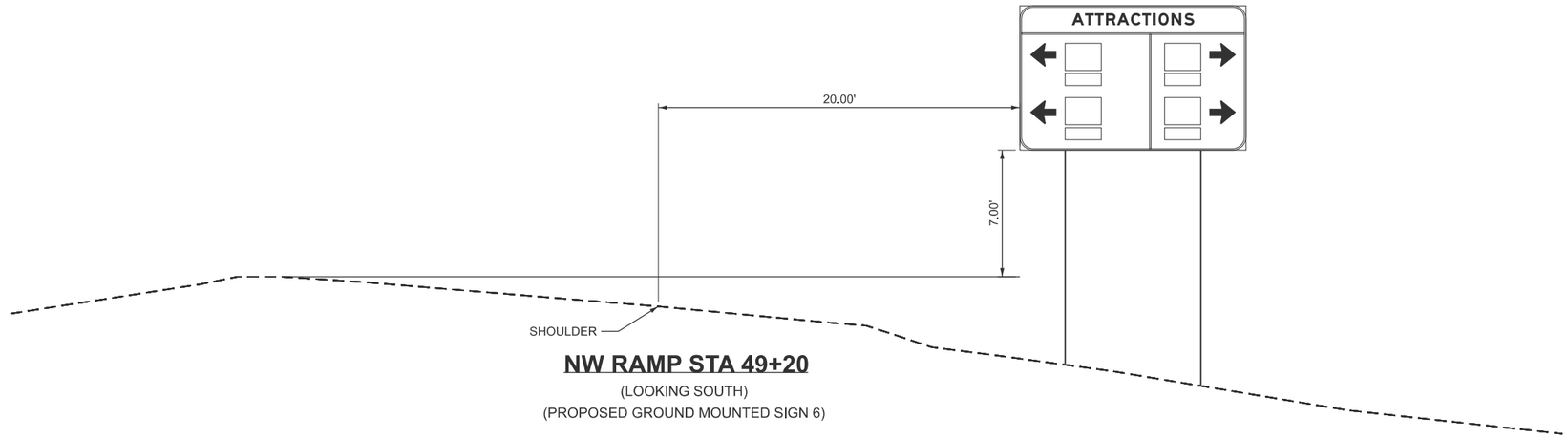

NW RAMP STA 49+20

(LOOKING SOUTH)

(PROPOSED GROUND MOUNTED SIGN 6)

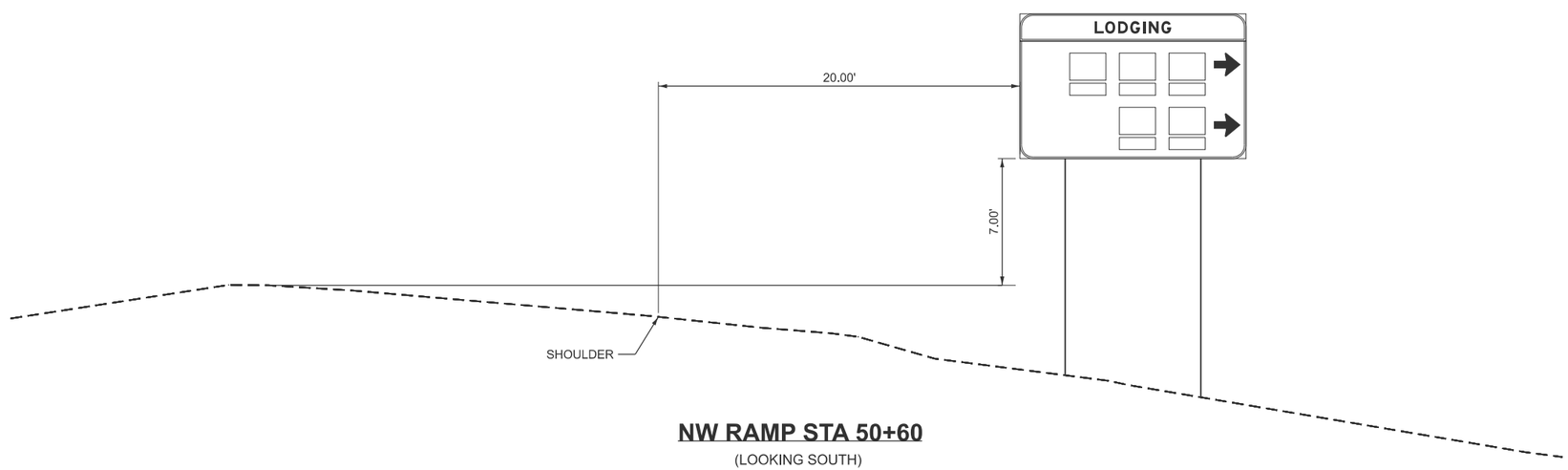

NW RAMP STA 50+60

(LOOKING SOUTH)

(PROPOSED GROUND MOUNTED SIGN 7)

MODEL: SHT_PLAN
FILE NAME: C:\Bentley\CONNECT10\11\Organization-Civil\IDOT_Standards\Cell\IDOT_Sheets.cel

HBM ENGINEERING GROUP, LLC

USER NAME =	DESIGNED - KAO	REVISED -	
	DRAWN - KAO	REVISED -	
	CHECKED - AMI	REVISED -	
PLOT DATE = 2/6/2025	DATE - 2/6/2025	REVISED -	

STATE OF ILLINOIS
DEPARTMENT OF TRANSPORTATION

PROPOSED SIGNING
ELEVATION VIEWS

SCALE: | SHEET 5 OF 9 SHEETS | STA. | TO STA.

F.A.* RTE.	SECTION	COUNTY	TOTAL SHEETS	SHEET NO.
*	141-1HBR-3 & (9,10) R-3	OGLE	508	271
		CONTRACT NO. 64N98		
	ILLINOIS	FED. AID PROJECT		

*FAI ROUTE 39 (I-39) & FAP 567 (IL 38)

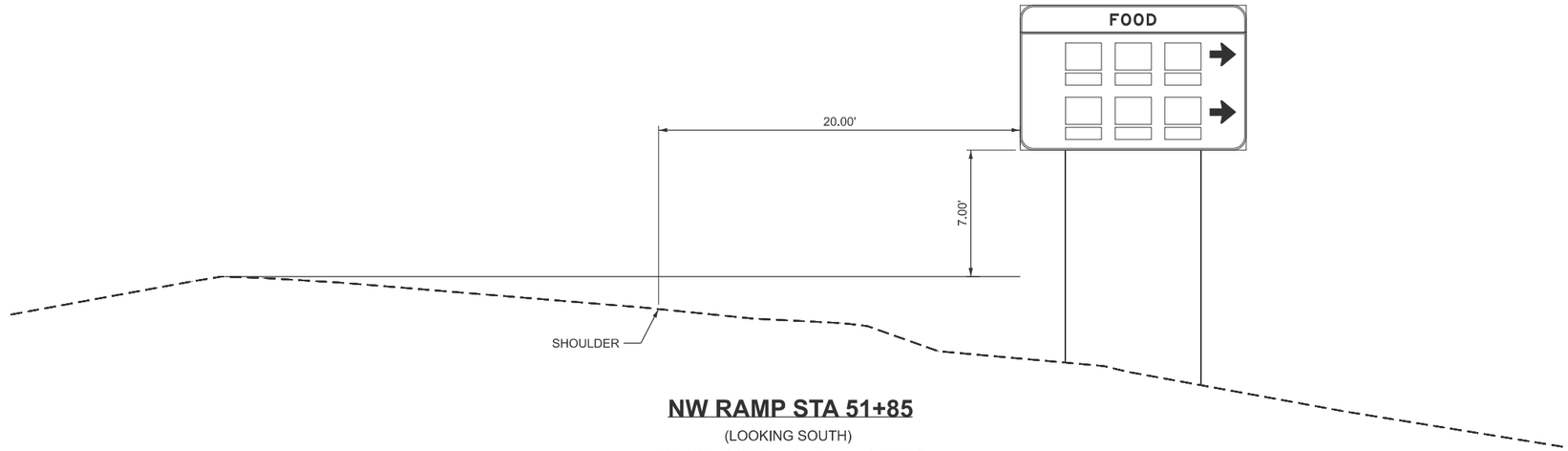

NW RAMP STA 51+85

(LOOKING SOUTH)

(PROPOSED GROUND MOUNTED SIGN 8)

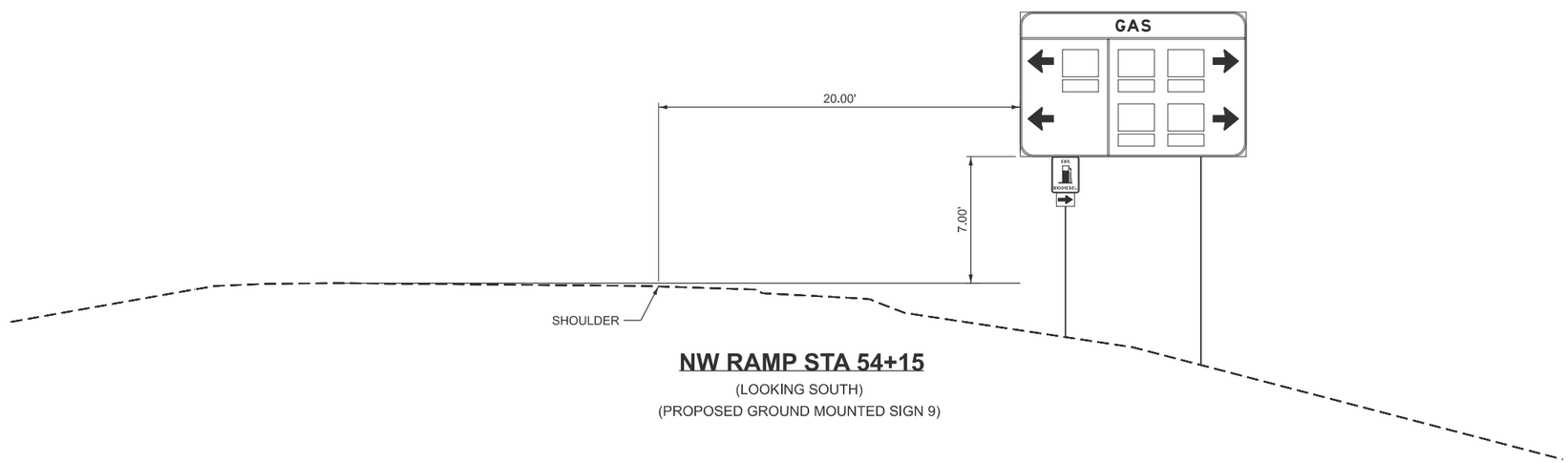

NW RAMP STA 54+15

(LOOKING SOUTH)

(PROPOSED GROUND MOUNTED SIGN 9)

MODEL: SHT_PLAN
FILE NAME: C:\Bentley\CONNECT10\11\Organization-Civil\IDOT_Standards\Civil\IDOT_Sheets.cel

HBM ENGINEERING GROUP, LLC

USER NAME =	DESIGNED - KAO	REVISED -	
	DRAWN - KAO	REVISED -	
	CHECKED - AMI	REVISED -	
PLOT DATE = 2/6/2025	DATE - 2/6/2025	REVISED -	

STATE OF ILLINOIS
DEPARTMENT OF TRANSPORTATION

PROPOSED SIGNING
ELEVATION VIEWS

SCALE: | SHEET 6 OF 9 SHEETS | STA. | TO STA.

F.A.* RTE.	SECTION	COUNTY	TOTAL SHEETS	SHEET NO.
*	141-1HBR-3 & (9,10) R-3	OGLE	508	272
		CONTRACT NO. 64N98		
	ILLINOIS	FED. AID PROJECT		

*FAI ROUTE 39 (I-39) & FAP 567 (IL 38)

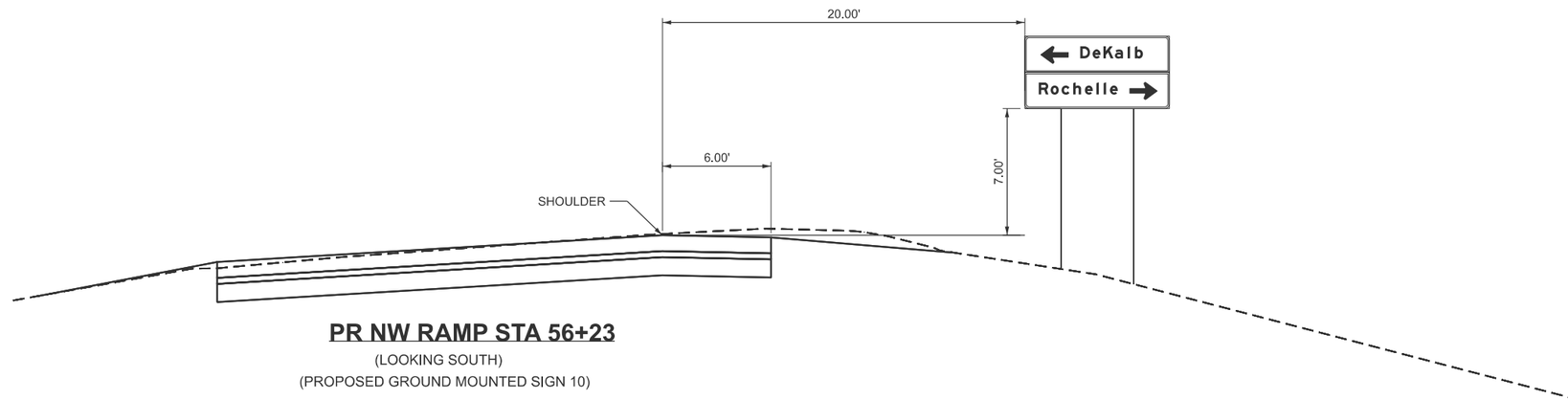

PR NW RAMP STA 56+23

(LOOKING SOUTH)
(PROPOSED GROUND MOUNTED SIGN 10)

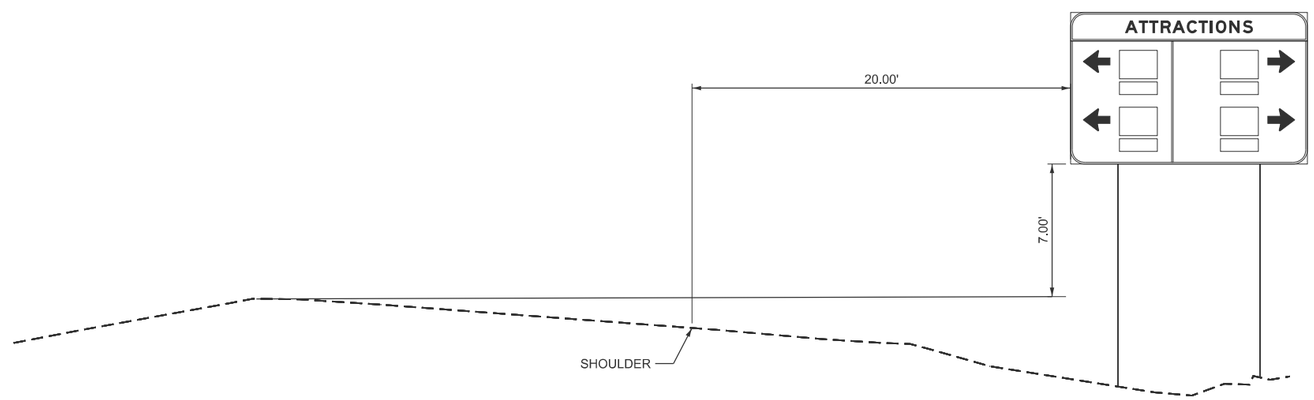

SE RAMP STA 109+05

(LOOKING NORTH)
(PROPOSED GROUND MOUNTED SIGN 11)

MODEL: SHT_PLAN
FILE NAME: C:\Bentley\CONNECT10\11\Organization-Civil\IDOT_Standards\Civil\IDOT_Sheets.cel

HBM ENGINEERING GROUP, LLC

USER NAME =	DESIGNED - KAO	REVISED -	
	DRAWN - KAO	REVISED -	
	CHECKED - AMI	REVISED -	
PLOT DATE = 2/6/2025	DATE - 2/6/2025	REVISED -	

STATE OF ILLINOIS
DEPARTMENT OF TRANSPORTATION

PROPOSED SIGNING
ELEVATION VIEWS

SCALE: | SHEET 7 OF 9 SHEETS | STA. | TO STA.

F.A.* RTE.	SECTION	COUNTY	TOTAL SHEETS	SHEET NO.
*	141-1HBR-3 & (9,10) R-3	OGLE	508	273
		CONTRACT NO. 64N98		
	ILLINOIS	FED. AID PROJECT		

*FAI ROUTE 39 (I-39) & FAP 567 (IL 38)

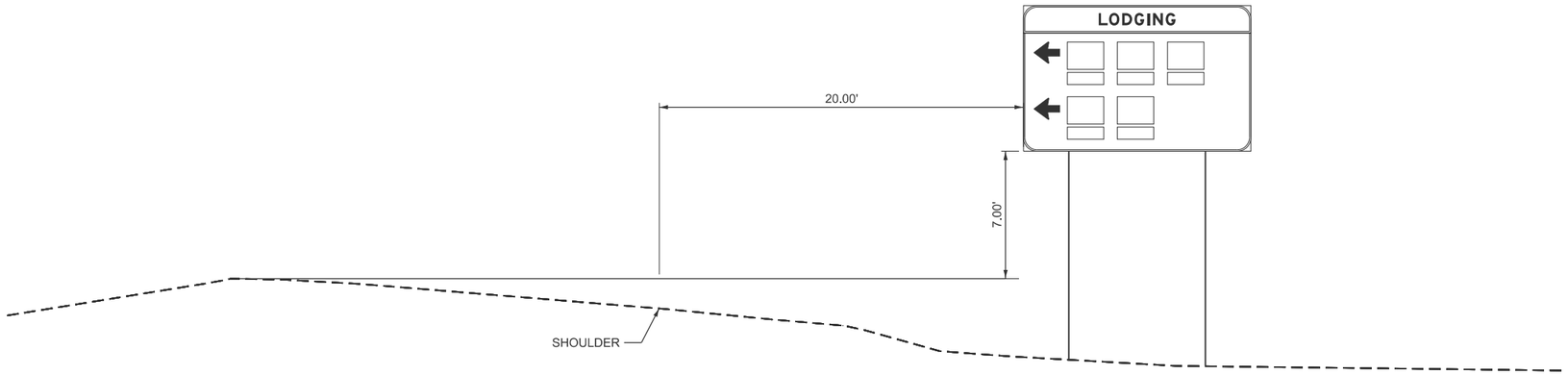

SE RAMP STA 111+30

(LOOKING NORTH)

(PROPOSED GROUND MOUNTED SIGN 12)

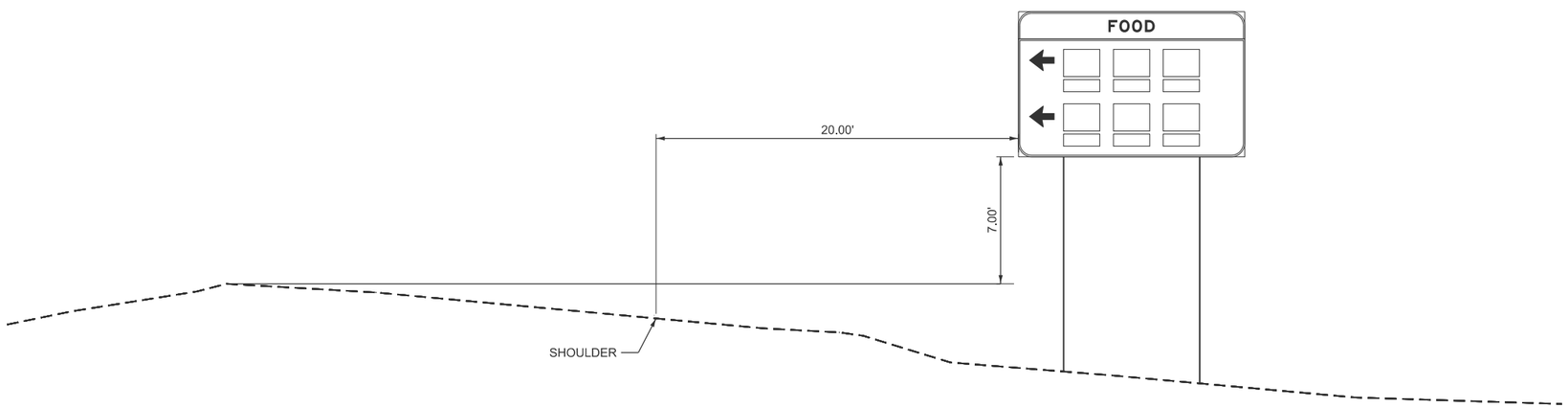

SE RAMP STA 112+30

(LOOKING NORTH)

(PROPOSED GROUND MOUNTED SIGN 13)

MODEL: SHT_PLAN
FILE NAME: C:\Bentley\CONNECT10\1\Organization-Civil\IDOT_Standards\Civil\IDOT_Sheets.cel

HBM ENGINEERING GROUP, LLC

USER NAME =	DESIGNED - KAO	REVISED -	STATE OF ILLINOIS DEPARTMENT OF TRANSPORTATION
	DRAWN - KAO	REVISED -	
	CHECKED - AMI	REVISED -	
PLOT DATE = 2/6/2025	DATE - 2/6/2025	REVISED -	

PROPOSED SIGNING ELEVATION VIEWS

SCALE: | SHEET 8 OF 9 SHEETS | STA. | TO STA.

F.A.* RTE.	SECTION	COUNTY	TOTAL SHEETS	SHEET NO.
*	141-1HBR-3 & (9,10) R-3	OGLE	508	274
		CONTRACT NO. 64N98		
	ILLINOIS	FED. AID PROJECT		

*FAI ROUTE 39 (I-39) & FAP 567 (IL 38)

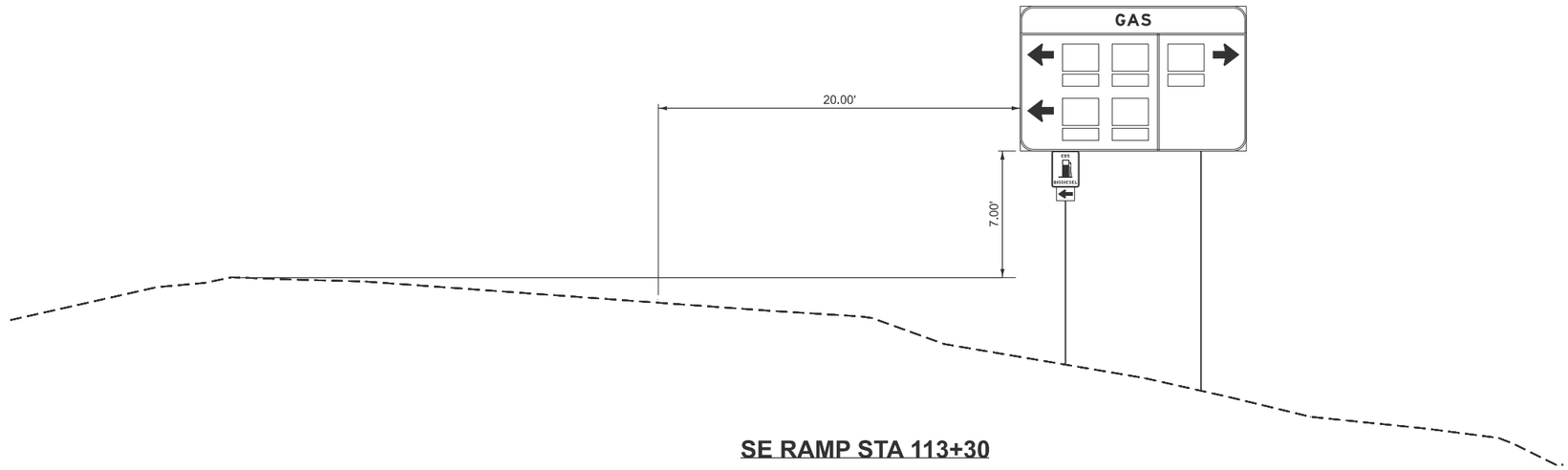

SE RAMP STA 113+30

(LOOKING NORTH)

(PROPOSED GROUND MOUNTED SIGN 14)

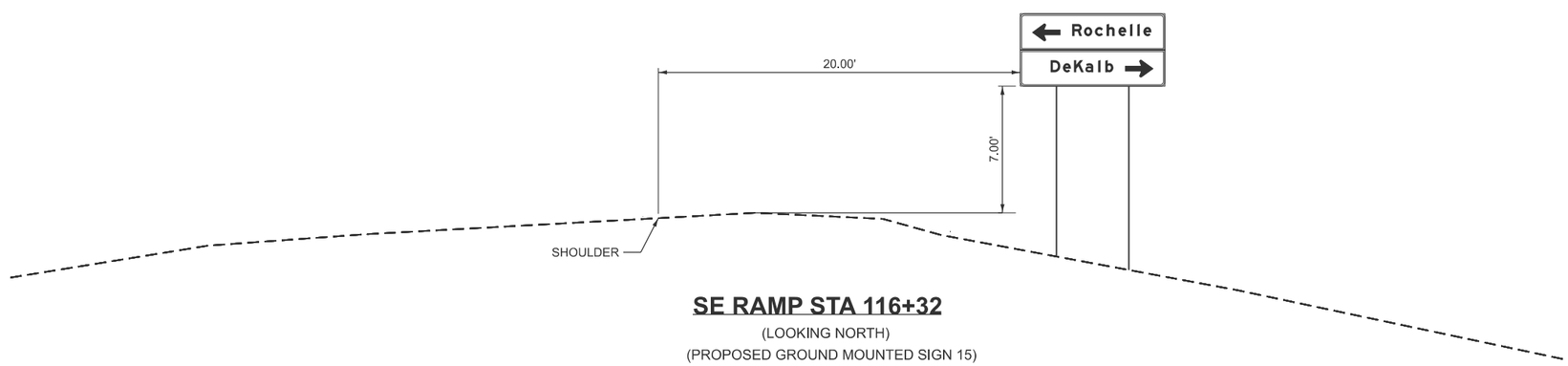

SE RAMP STA 116+32

(LOOKING NORTH)

(PROPOSED GROUND MOUNTED SIGN 15)

MODEL: SHT_PLAN
FILE NAME: C:\Bentley\CONNECT10\1\Organization-Civil\IDOT_Standards\Civil\IDOT_Sheets.cel

HBM ENGINEERING GROUP, LLC	USER NAME =	DESIGNED - KAO	REVISED -
		DRAWN - KAO	REVISED -
		CHECKED - AMI	REVISED -
	PLOT DATE = 2/6/2025	DATE - 2/6/2025	REVISED -

STATE OF ILLINOIS
DEPARTMENT OF TRANSPORTATION

PROPOSED SIGNING
ELEVATION VIEWS

SCALE: | SHEET 9 OF 9 SHEETS | STA. | TO STA.

F.A.* RTE.	SECTION	COUNTY	TOTAL SHEETS	SHEET NO.
*	141-1HBR-3 & (9,10) R-3	OGLE	508	275
		CONTRACT NO. 64N98		
	ILLINOIS	FED. AID PROJECT		

*FAI ROUTE 39 (I-39) & FAP 567 (IL 38)

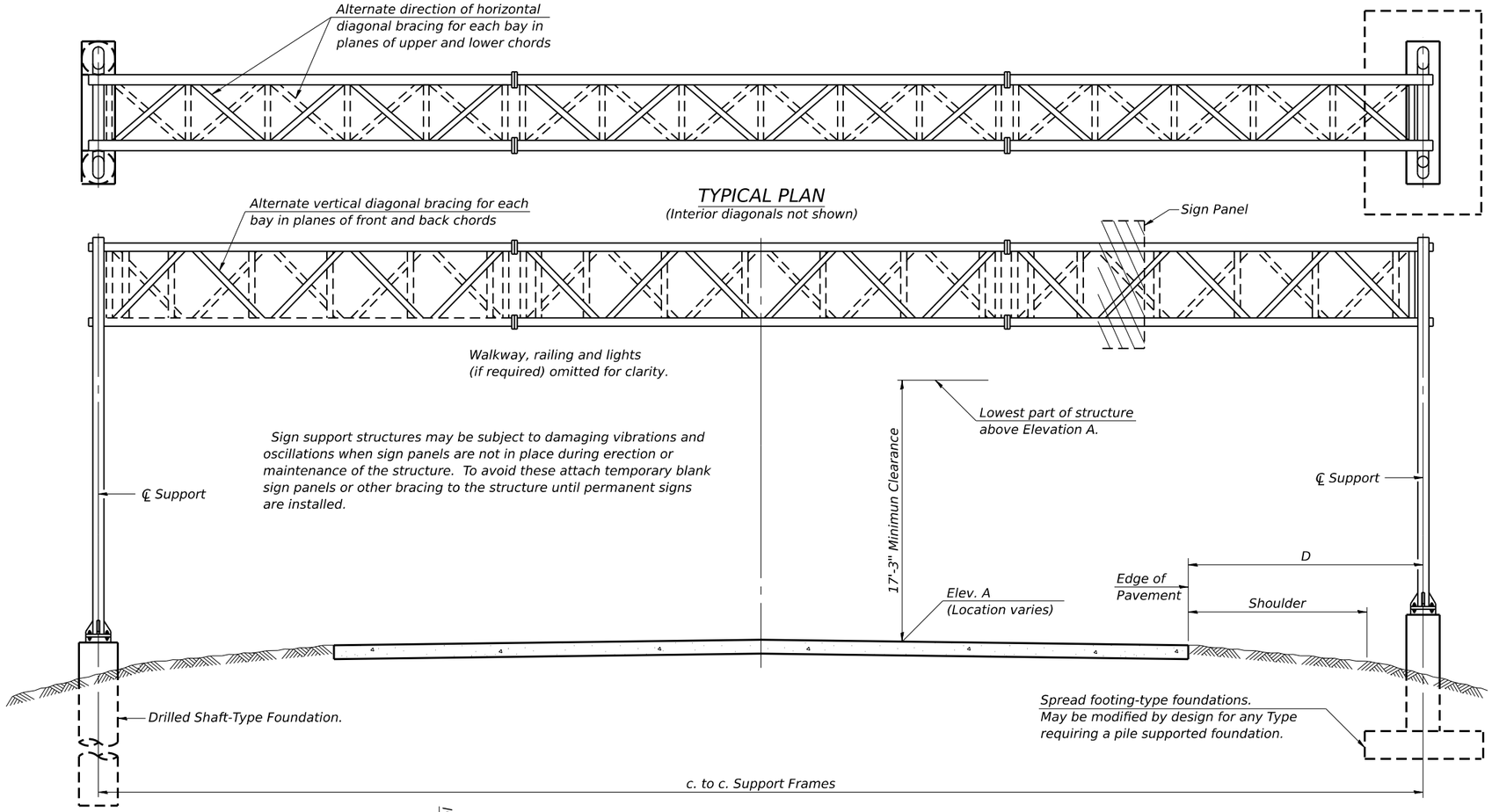

TYPICAL PLAN

(Interior diagonals not shown)

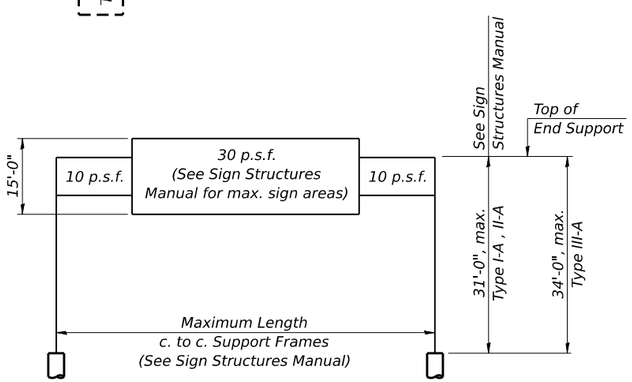

DESIGN WIND LOADING DIAGRAM

Parameters shown are basis for I.D.O.T. Standards and Sign Manual Tables. Installations not within dimensional limits shown require special analysis for all components.

TYPICAL ELEVATION

(Looking at Face of Signs**)

Elev. A = Elevation at point of minimum clearance to sign, walkway support or truss.

Sign Number	Structure Number	†Station	Design Truss Type	c. to c. Supports	Elev. A	Dim. D	Height of Tallest Sign	Total Sign Area (ft^2)
1	2S071S038R000.0	1656+86.66	I–A	92'–0"	816.56	32'–8¾"	9'–0"	200.5
4	2S071S038L000.0	2673+91.44	I–A	85'–0"	813.48	22'–6¾"	9'–0"	192.5
5	2S071I039L099.5	42+50	II–A	121'–0"	805.77	37'–2¾"	17'–0"	375

** Looking upstation for structures with signs both sides.

* If M270 Gr. 50W (M222) steel is proposed, chemistry for plate to be used shall first be approved by the Engineer as suitable for galvanizing and welding.

† Sign Structure Stations measured along the following Baselines:

2S071S038R000.0 - Prop. ℄ EB IL Rte. 38
2S071S038L000.0 - Prop. ℄ WB IL Rte. 38
2S071I039L099.5 - Prop. ℄ NW Ramp (I-39 SB Exit Ramp to IL Rte. 38)

GENERAL NOTES

DESIGN: AASHTO Standard Specifications for Structural Supports for Highway Signs, Luminaires and Traffic Signals. ("AASHTO Specifications")

CONSTRUCTION: Current (at time of letting) Illinois Department of Transportation Standard Specifications for Road and Bridge Construction, Supplemental Specifications and Special Provisions. ("Standard Specifications")

LOADING: 90 M.P.H. WIND VELOCITY

WALKWAY LOADING: Dead load plus 500 lbs. concentrated live load.

DESIGN STRESSES:
Field Units
f'c = 3,500 p.s.i.
fy = 60,000 p.s.i. (reinforcement)

WELDING: All welds to be continuous unless otherwise shown. All welding to be done in accordance with current AWS D1.1 and D1.2 Structural Welding Codes (Steel and Aluminum) and the Standard Specificiations.

MATERIALS: Aluminum Alloys as shown throughout plans. All Structural Steel Pipe shall be ASTM A53 Grade B or A500 Grade B or C. If A500 pipe is substituted for A53, then the outside diameter shall be as detailed and wall thickness greater than or equal to A53. All Structural Steel Plates and Shapes shall conform to AASHTO M270 Gr. 36, Gr. 50 or Gr. 50W*. Stainless steel for shims, sleeves and handhole covers shall be ASTM A240, Type 302 or 304, or another alloy suitable for exterior exposure and acceptable to the Engineer.
The steel pipe and stiffening ribs at the base plate for the column shall have a minimum longitudinal Charpy V-Notch (CVN) energy of 15 lb.-ft. at 40° F. (Zone 2) before galvanizing.

FASTENERS FOR ALUMINUM TRUSSES: All bolts noted as "high strength" must satisfy the requirements of AASHTO M164 (ASTM A325), or approved alternate, and must have matching lock nuts. Threaded studs for splices (if Members interfere) must satisfy the requirements of ASTM A449, ASTM A193, Grade B7, or approved alternate, and must have matching lock nuts. Bolts and lock nuts not required to be high strength must satisfy the requirements of ASTM A307. All bolts and lock nuts must be hot dip galvanized per AASHTO M232. The lock nuts must have nylon or steel inserts. A stainless steel flat washer conforming to ASTM A240 Type 302 or 304, is required under both head and nut or under both nuts where threaded studs are used. High strength bolt installation shall conform to Article 505.04 (f) (2)d of the IDOT Standard Specifications for Road and Bridge Construction. Rotational capacity ("ROCAP") testing of bolts will not be required.

U-BOLTS AND EYEBOLTS: U-Bolts and Eyebolts must be produced from ASTM A276 Type 304, 304L, 316 or 316L, Condition A, cold finished stainless steel, or an equivalent material acceptable to the Engineer. All nuts for U-Bolts and Eyebolts must be lock nuts equivalent to ASTM A307 with nylon or steel inserts and hot dip galvanized per AASHTO M232. A stainless steel flat washer conforming to ASTM A240, Type 302 or 304, is required under each U-Bolt and Eyebolt lock nut.

GALVANIZING: All Steel Grating, Plates, Shapes and Pipe shall be Hot Dip Galvanized after fabrication in accordance with AASHTO M111. Painting is not permitted.

ANCHOR RODS: Shall conform to ASTM F1554 Gr. 105.

CONCRETE SURFACES: All concrete surfaces above an elevation 6" below the lowest final ground line at each foundation shall be cleaned and coated with Concrete Sealer in accordance with the Standard Specifications.

REINFORCEMENT BARS: Reinforcement Bars designated (E) shall be epoxy coated in accordance with the Standard Specifications.

FOUNDATIONS: The contract unit price for Concrete Foundations and Drilled Shaft Concrete Foundations shall include reinforcement bars complete in place.

TOTAL BILL OF MATERIAL

ITEM	UNIT	TOTAL
OVERHEAD SIGN STRUCTURE SPAN TYPE I–A	Foot	177
OVERHEAD SIGN STRUCTURE SPAN TYPE II–A	Foot	121
DRILLED SHAFT CONCRETE FOUNDATIONS	Cu. Yds.	90.7

OS-A-1 5-15-2023

HBM ENGINEERING GROUP, LLC

USER NAME =	DESIGNED - JJS, GFA	REVISED -
	CHECKED - MI	REVISED -
PLOT SCALE =	DRAWN - GFA	REVISED -
PLOT DATE =	CHECKED -	REVISED -

STATE OF ILLINOIS
DEPARTMENT OF TRANSPORTATION

OVERHEAD SIGN STRUCTURES - GENERAL PLAN & ELEVATION - ALUMINUM TRUSS & STEEL SUPPORTS

SHEET 1 OF 14 SHEETS

F.A.* RTE.	SECTION	COUNTY	TOTAL SHEETS	SHEET NO.
*	141-1HBR-3 & (9,10)R-3	OGLE	508	276
		CONTRACT NO. 64N98		
	ILLINOIS	FED. AID PROJECT		

*FAI ROUTE 39 (I-39) & FAP 567 (IL 38)

MODEL: Default
FILE NAME: P:\2001-818 PTB 194-021 (D2) IL 38 @ I-39 (CBBEL)\Sheet Files\Final Plans\Sign Structures\0171196-D9200120-SignDet01-HBM.dgn
2/18/2025 4:30:19 PM

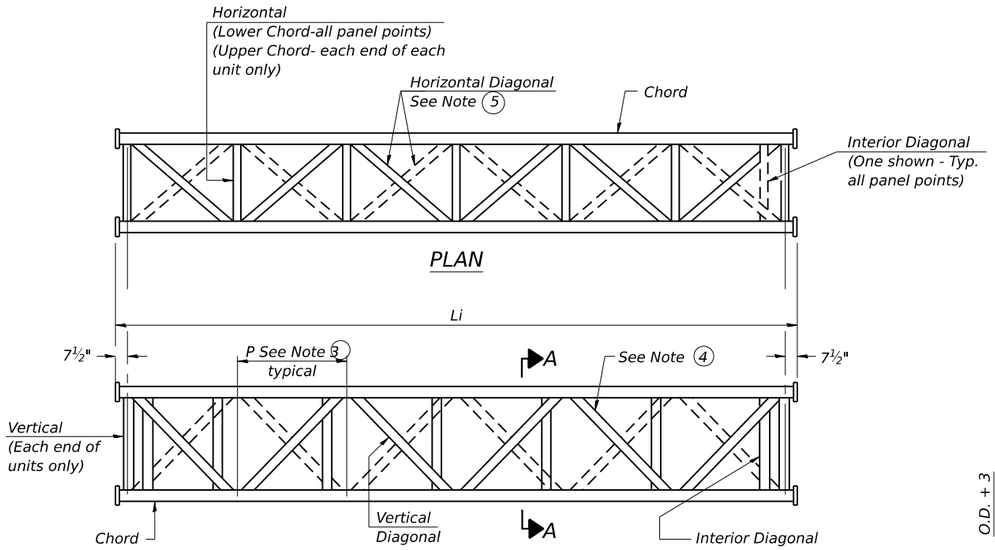

ELEVATION
TYPICAL INTERIOR UNIT
Even number of panels/interior unit required.

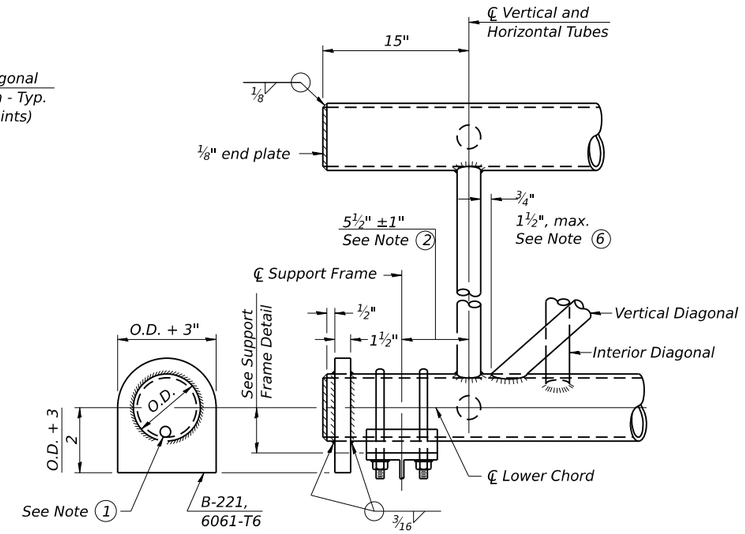

SUPPORT END DETAIL FOR EXTERIOR UNIT

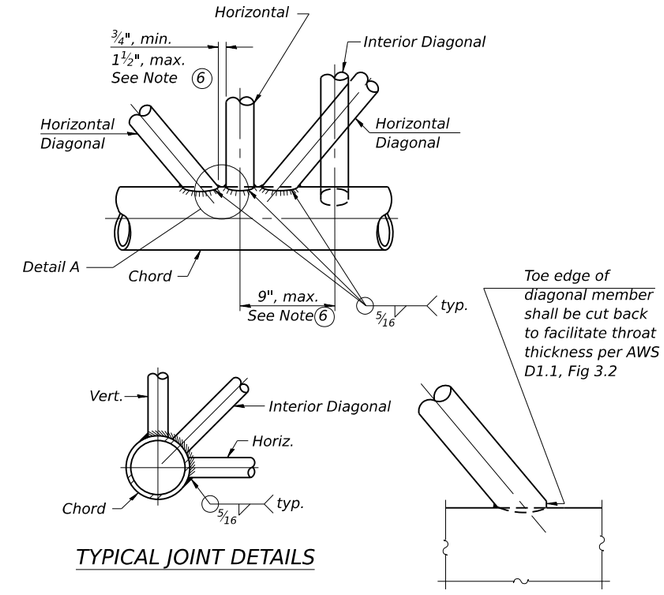

TYPICAL JOINT DETAILS

DETAIL A

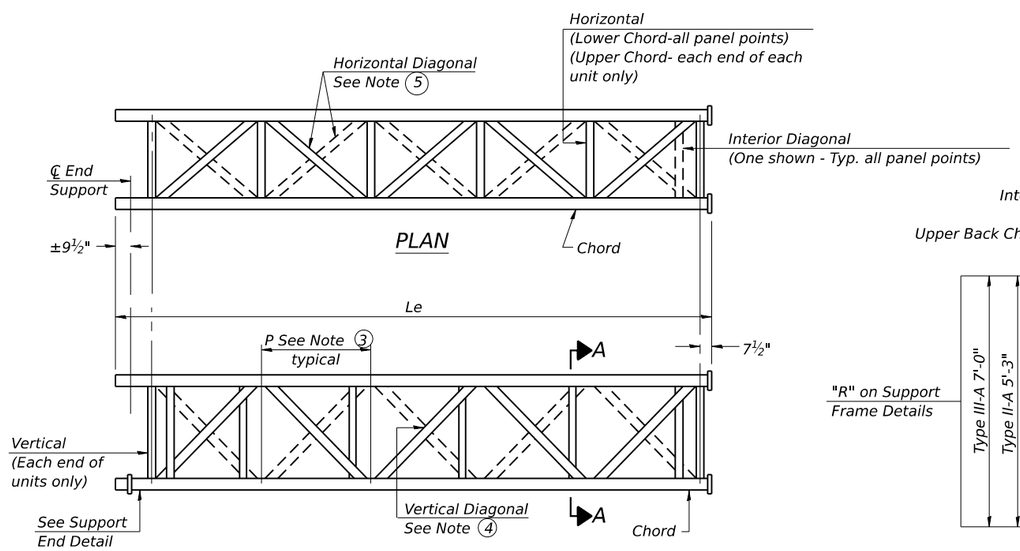

ELEVATION
TYPICAL EXTERIOR UNIT
Even or odd number of panels/exterior units allowed.

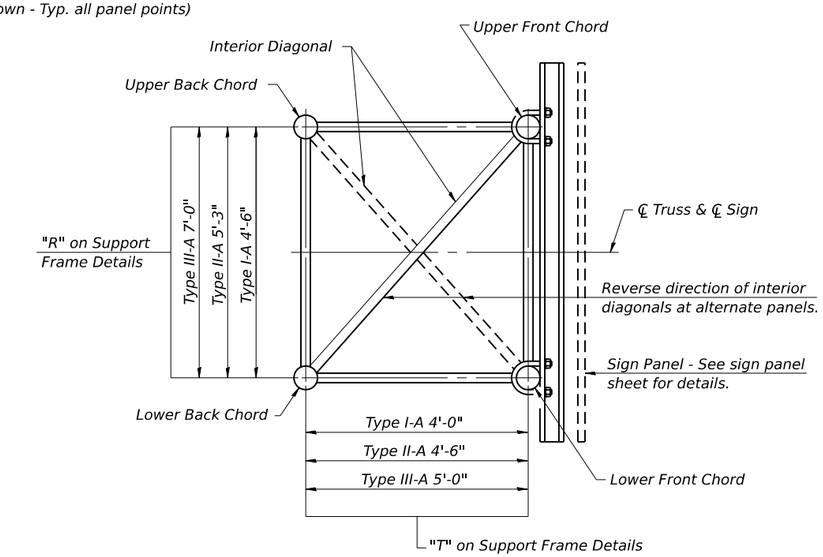

SECTION A-A

1. Contractor may alternatively use standard aluminum drive-fit cap to close end. ½" Ø drain hole in end plate/drive-fit cap. (Typ. at ends of all chords)
2. 5½" end dimension may vary by ±1" to provide uniform panel spacing (P).
3. Panel spacing (P) shall be uniform for entire truss and between 4'-0" and 5'-0" for Type I-A or 4'-0" and 5'-6" for Types II-A and III-A.
4. Vertical Diagonals in front and back face shall alternate.
5. Hidden lines show wind bracing alternates direction between planes of top and bottom chords.
6. All diagonals shall be detailed for minimum offset from the panel point based on the following: Offset shall be such as to provide a ¾" minimum to 1½" maximum clearance between any diagonal and any horizontal or vertical member, and to provide clearance for U-bolt connections of signs or walkway brackets.

OS-A-2 5-15-2023

HBM ENGINEERING GROUP, LLC

USER NAME =	DESIGNED - JJS, GFA	REVISED -	
	CHECKED - MI	REVISED -	
PLOT SCALE =	DRAWN - GFA	REVISED -	
PLOT DATE =	CHECKED -	REVISED -	

STATE OF ILLINOIS
DEPARTMENT OF TRANSPORTATION

OVERHEAD SIGN STRUCTURES - ALUMINUM TRUSS
DETAILS FOR TRUSS TYPES I-A, II-A AND III-A

SHEET 2 OF 14 SHEETS

F.A.* RTE.	SECTION	COUNTY	TOTAL SHEETS	SHEET NO.
*	141-1HBR-3 & (9,10)R-3	OGLE	508	277
		CONTRACT NO. 64N98		
	ILLINOIS	FED. AID PROJECT		

*FAI ROUTE 39 (I-39) & FAP 567 (IL 38)

MODEL: Default
FILE NAME: P:\2001-818 PTB 194-021 (D2) IL 38 @ I-39 (CBBEL)\Sheet Files\Final Plans\Sign Structures\0171196-D9200120-SignDet02-HBM.dgn
2/18/2025 4:30:20 PM

TRUSS UNIT TABLE

Sign Number	Structure Number	†Station	Design Truss Type	Exterior Units (2)			Interior Unit				Upper & Lower Chord		Verticals; Horizontals; Vertical,Horizontal, and Interior Diagonals		Camber at Midspan	Splicing Flange					
				No. Panels per Unit	Unit Lgth.(Le)	Panel Lgth.(P)	No. Req'd.	No. Panels per Unit	Unit Lgth.(Li)	Panel Lgth.(P)	O.D.	Wall	O.D.	Wall		Bolts		Weld Sizes		A	B
																No./Splice	Dia.	W	W1		
1	2S071S038R000.0	1656+86.66	I-A	6	31'-4½"	4'-11"	1	6	30'-9"	4'-11"	5½"	5/16"	2½"	5/16"	2⅞"	6	⅞"	⅜"	¼"	9¼"	12¼"
4	2S071S038L000.0	2673+91.44	I-A	6	29'-1½"	4'-6½"	1	6	28'-6"	4'-6½"	5"	5/16"	2½"	5/16"	2½"	6	⅞"	5/16"	¼"	8¾"	11¾"
5	2S071I039L099.5	42+50	II-A	6	31'-0"	4'-10¼"	2	6	30'-4½"	4'-10¼"	7"	⅜"	3"	5/16"	4¼"	8	1	7/16"	5/16"	11½"	15"

† Sign structure stations measured along the following Baselines:

2S071S038R000.0 - Prop. ℄ EB IL Rte. 38
2S071S038L000.0 - Prop. ℄ WB IL Rte. 38
2S071I039L099.5 - Prop. ℄ NW Ramp (I-39 SB Exit Ramp to IL Rte. 38)

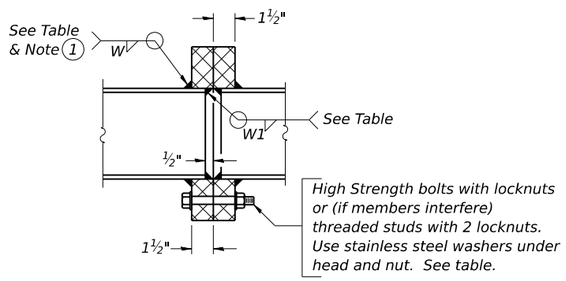

SECTION B-B

1 Splicing Flanges shall be attached to each truss unit with the truss shop assembled to camber shown. Truss units shall be in proper alignment and flange surfaces shall be shop bolted into full contact before welding. Sufficient external welds or tacks shall be made to secure flanges until remaining welds are made after disassembly. Adjacent flanges shall be "match marked" to insure proper field assembly.

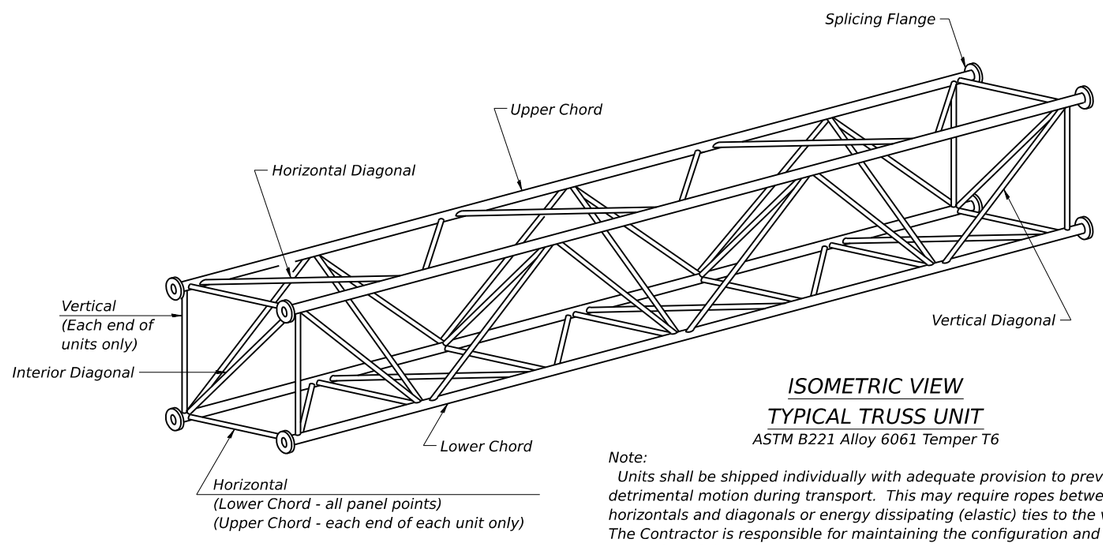

ISOMETRIC VIEW
TYPICAL TRUSS UNIT

ASTM B221 Alloy 6061 Temper T6

Note:
Units shall be shipped individually with adequate provision to prevent detrimental motion during transport. This may require ropes between horizontals and diagonals or energy dissipating (elastic) ties to the vehicle. The Contractor is responsible for maintaining the configuration and protection of the units.

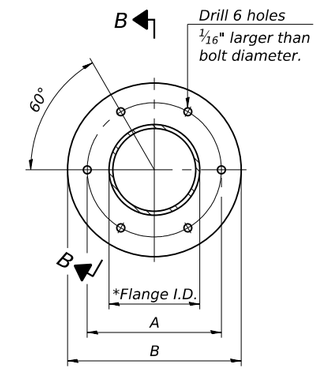

TRUSS TYPES I-A, II-A, & III-A

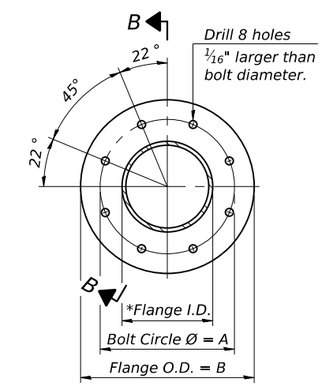

TRUSS TYPES II-A & III-A

SPLICING FLANGES

ASTM B221, Alloy 6061-T6
or ASTM B209, Alloy 6061-T651
*To fit O.D. of Chord with maximum gap of 1/16".

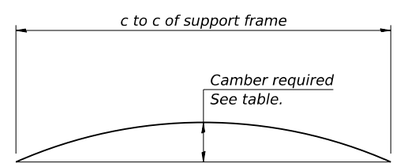

CAMBER DIAGRAM

Camber curve shown is theoretical. Actual camber attained by slope changes at splices between units.

CAMBER ATTAINMENT EXAMPLES:

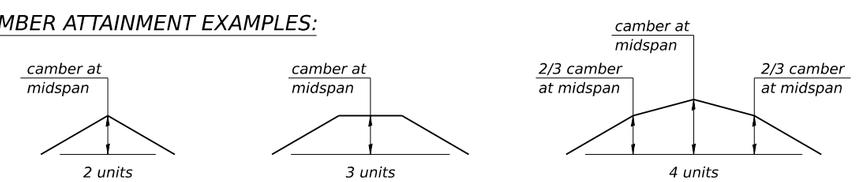

Camber shown is for fabrication only, measured with truss fully supported. (No-load condition)

OS4-A-2 5-15-2023

HBM ENGINEERING GROUP, LLC

USER NAME =	DESIGNED - JJS, GFA	REVISED -	
	CHECKED - MI	REVISED -	
PLOT SCALE =	DRAWN - GFA	REVISED -	
PLOT DATE =	CHECKED -	REVISED -	

STATE OF ILLINOIS
DEPARTMENT OF TRANSPORTATION

OVERHEAD SIGN STRUCTURES - ALUMINUM TRUSS DETAILS
FOR TRUSS TYPES I-A, II-A AND III-A

SHEET 3 OF 14 SHEETS

F.A.* RTE.	SECTION	COUNTY	TOTAL SHEETS	SHEET NO.
*	141-1HBR-3 & (9,10)R-3	OGLE	508	278
		CONTRACT NO. 64N98		
	ILLINOIS	FED. AID PROJECT		

*FAI ROUTE 39 (I-39) & FAP 567 (IL 38)

MODEL: Default
FILE NAME: P:\2001-818 PTB 194-021 (D2) IL 38 @ I-39 (CBBEL)\Sheet Files\Final Plans\Sign Structures\0171196-D9200120-SignDet03-HBM.dgn
2/18/2025 4:30:21 PM

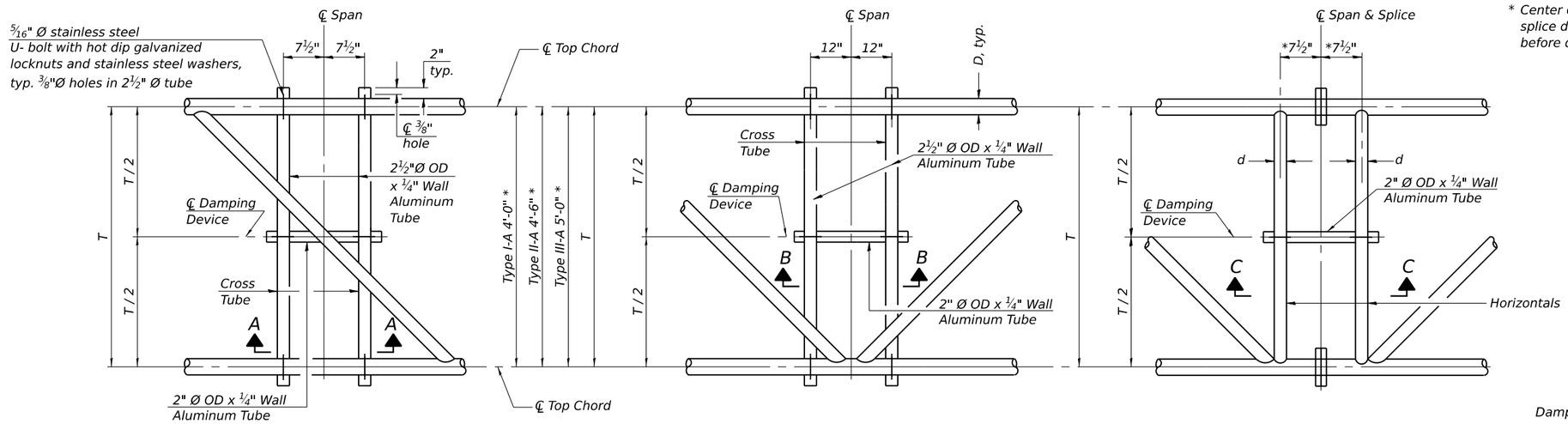

* Center of horizontal to center of splice dimension may vary. Verify before drilling holes in mounting tube.

PLAN DETAIL "A"
℄ Span between Panel Points

PLAN DETAIL "B"
℄ Span at Panel Point

PLAN DETAIL "C"
℄ Span at ℄ Chord Splice

NOTES

Damper: One damper per truss. (31 lbs. minimum Stockbridge-Type Aluminum - 29" minimum between ends of weights) Cost included in Overhead Sign Structure...

Materials: Aluminum tubes shall be ASTM B221 alloy 6061 temper T6. Cost included in Overhead Sign Structure...

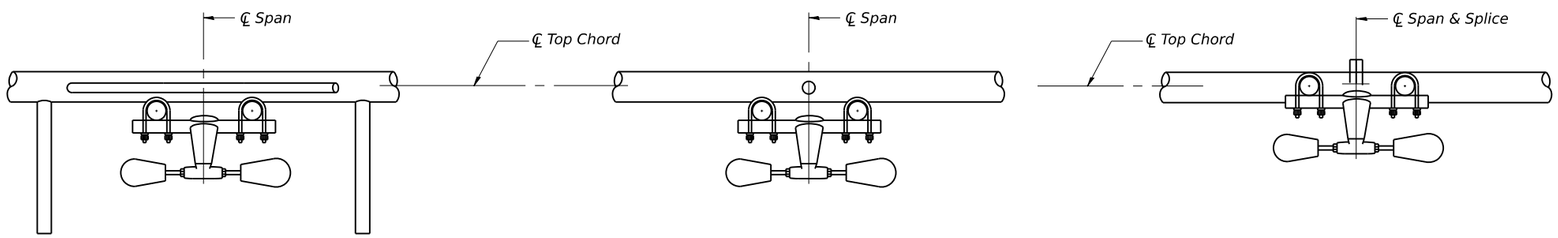

SECTION A-A

SECTION B-B

SECTION C-C

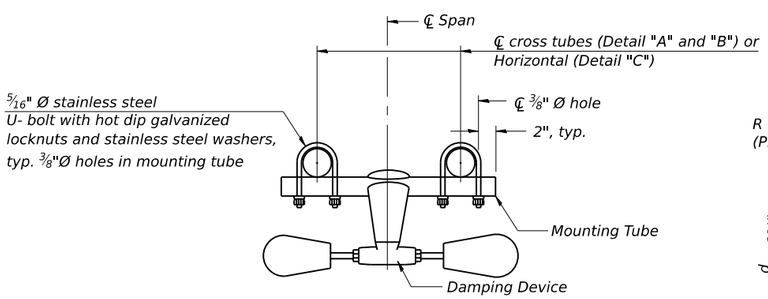

TRUSS DAMPING DEVICE CONNECTION DETAIL
(Typical)

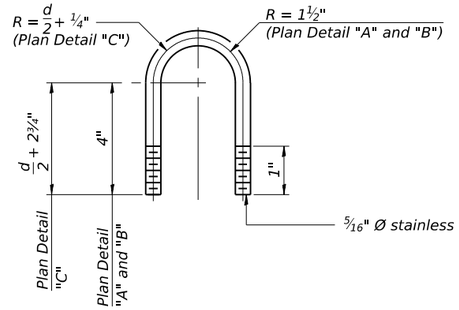

DAMPING DEVICE MOUNTING TUBE U-BOLT DETAIL
(Typical)

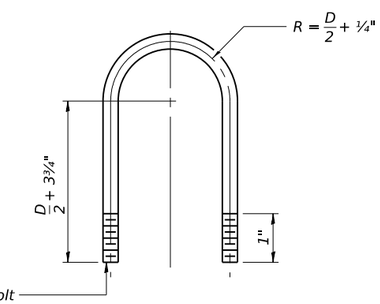

TOP CHORD TO CROSS TUBE U-BOLT DETAIL
(Typical - Detail "A" and "B")

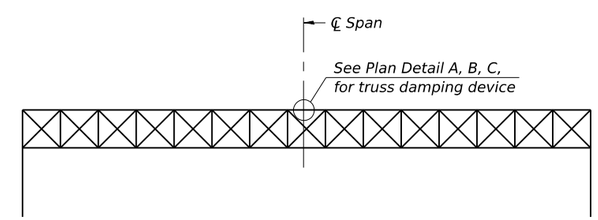

ELEVATION
Aluminum Overhead Sign Truss

OS-A-D 5-15-2023

MODEL: Default
FILE NAME: P:\2001-818 PTB 194-021 (D2) IL 38 @ I-39 (CBBEL)\Sheet Files\Final Plans\Sign Structures\0171196-D9200120-SignDet04-HBM.dgn
2/18/2025 4:30:22 PM

HBM ENGINEERING GROUP, LLC

USER NAME =	DESIGNED - JJS, GFA	REVISED -
	CHECKED - MI	REVISED -
PLOT SCALE =	DRAWN - GFA	REVISED -
PLOT DATE =	CHECKED -	REVISED -

STATE OF ILLINOIS
DEPARTMENT OF TRANSPORTATION

OVERHEAD SIGN STRUCTURE
DAMPING DEVICE

SHEET 4 OF 14 SHEETS

F.A.* RTE.	SECTION	COUNTY	TOTAL SHEETS	SHEET NO.
*	141-1HBR-3 & (9,10)R-3	OGLE	508	279
		CONTRACT NO. 64N98		
	ILLINOIS	FED. AID PROJECT		

*FAI ROUTE 39 (I-39) & FAP 567 (IL 38)

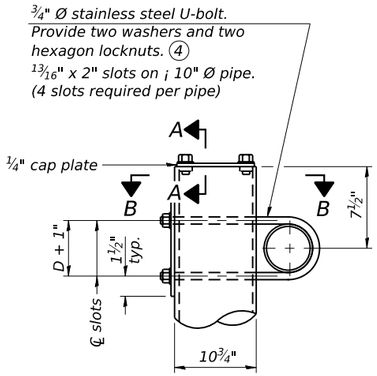

DETAIL A

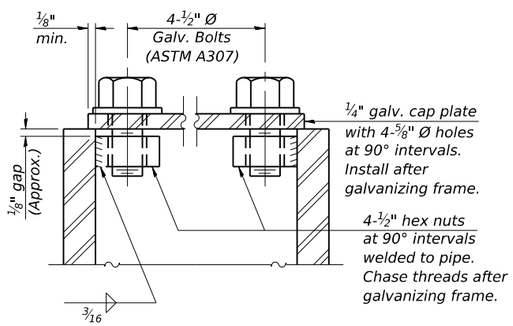

SECTION A-A

As an alternate to bolts, may use galvanized drive-fit caps installed after galvanizing frame.

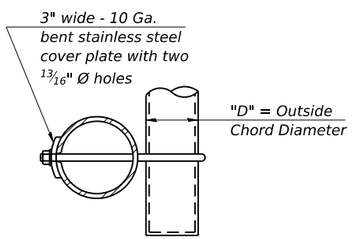

SECTION B-B

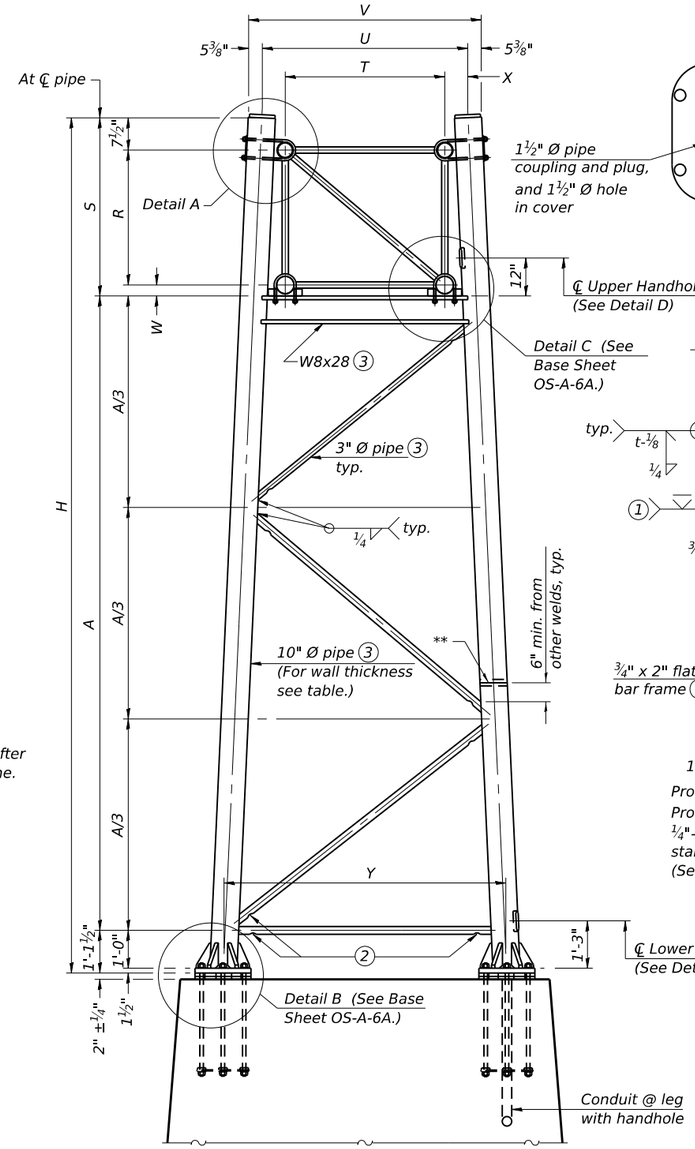

For Foundation Details, see base sheet OS-F3 (Spread Footing) or OS4-F3 (Drilled Shaft).

SIDE ELEVATION

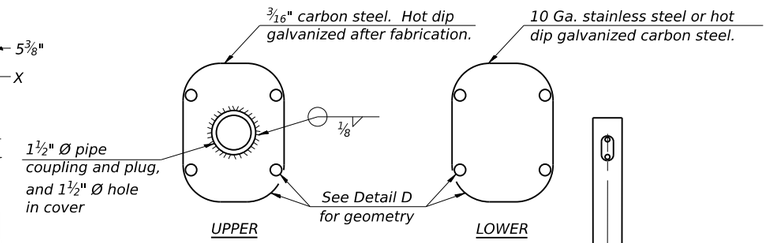

HANDHOLE COVERS

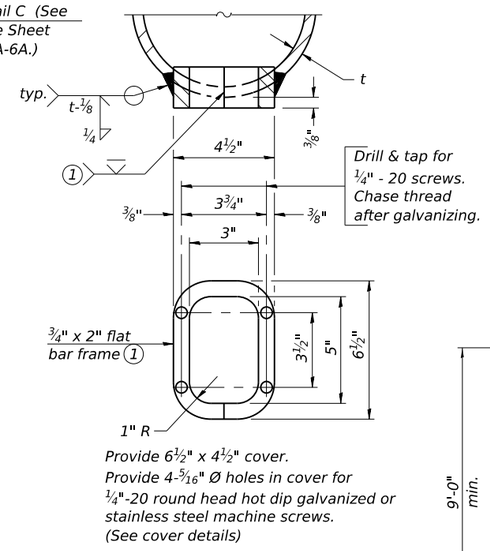

Provide 6½" x 4½" cover.
Provide 4-5/16" Ø holes in cover for ¼"-20 round head hot dip galvanized or stainless steel machine screws.
(See cover details)

DETAIL D

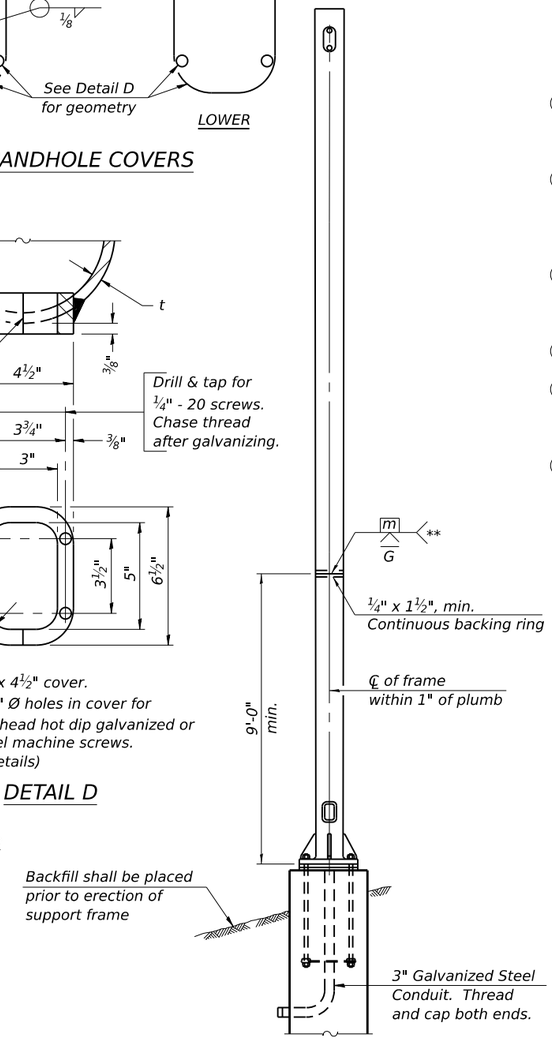

END ELEVATION

Support Design Loads: See Base Sheet OS-A-1 for design and loading criteria.
Load combinations checked include deadload plus:
a) 100% wind normal to sign, 20% parallel to sign
b) 60% wind normal to sign, 30% parallel to sign

(1) In lieu of fabricated handhole frame as shown, may cut from 2" plate (rolling direction vertical). All cut faces to be ground to ANSI Roughness of 500μ in or less.

(2) Galvanizing vent holes of adequate size shall be provided on underside at each end of bracing pipes. Alternately, holes may be provided in wall of pipe column. All vent holes shall be drilled and de-burred, typ.

(3) Steel pipe, plate, carbon steel handhole covers and rolled sections shall be hot dip galvanized after fabrication. Painting is not permitted. See Base Sheet OS-A-1.

(4) See General Notes for fasteners.

(5) Dimensions shown are based on selection criteria in the Sign Structures Manual. Nonstandard applications must have dimensions verified or amended as appropriate.

(6) "H" based on 15'-0" or actual sign height, whichever is greater.

†Sign structure stations measured along the following Baselines:

2S071S038R000.0 - Prop. ℄ EB IL Rte. 38
2S071S038L000.0 - Prop. ℄ WB IL Rte. 38
2S071I039L099.5 - Prop. ℄ NW Ramp (I-39 SB Exit Ramp to IL Rte. 38)

Truss Type	Dimensions							
	R	S	T	U	V	W	X	Y
I-A	4'-6"	5'-5½"	4'-0"	5'-6"	6'-4¾"	4"	9"	8'-3"
II-A (5)	5'-3"	6'-3¼"	4'-6"	6'-1"	6'-11¾"	4¾"	9½"	8'-3"

10" Ø PIPE TRUSS SUPPORT FRAME

** One butt welded joint is allowed only on one post per support frame. If used, weld procedure must be pre-approved by Engineer and joint shall receive 100% RT or UT (tension criteria) at Contractor's expense.

Sign Number	Structure Number	†Station	Support Left	Support Right	Truss Type	Pipe Wall Thickness	H (6)	A
1	2S071S038R000.0	1656+86.66	X		I-A	0.365	26'-4¼"	19'-9¼"
				X	I-A	0.365	33'-2⅜"	26'-7⅜"
4	2S071S038L000.0	2673+91.44	X		I-A	0.279	26'-6¼"	19'-11¼"
				X	I-A	0.279	26'-7½"	20'-0½"
5	2S071I039L099.5	42+50	X		II-A	0.500	33'-0"	25'-7¼"
				X	II-A	0.500	33'-0"	25'-7¼"

OS-A-6 5-15-2023

HBM ENGINEERING GROUP, LLC

USER NAME =	DESIGNED - JJS, AA	REVISED -
	CHECKED - MI	REVISED -
PLOT SCALE =	DRAWN - AA	REVISED -
PLOT DATE =	CHECKED -	REVISED -

STATE OF ILLINOIS
DEPARTMENT OF TRANSPORTATION

OVERHEAD SIGN STRUCTURES
SUPPORT FRAME FOR ALUMINUM TRUSS

SHEET 5 OF 14 SHEETS

F.A.* RTE.	SECTION	COUNTY	TOTAL SHEETS	SHEET NO.
*	141-1HBR-3 & (9,10)R-3	OGLE	508	280
		CONTRACT NO. 64N98		
		ILLINOIS FED. AID PROJECT		

*FAI ROUTE 39 (I-39) & FAP 567 (IL 38)

MODEL: Default
FILE NAME: P:\2001-818 PTB 194-021 (D2) IL 38 @ I-39 (CBBEL)\Sheet Files\Final Plans\Sign Structures\0171196-D9200120-SignDet05-HBM.dgn
2/18/2025 4:30:23 PM

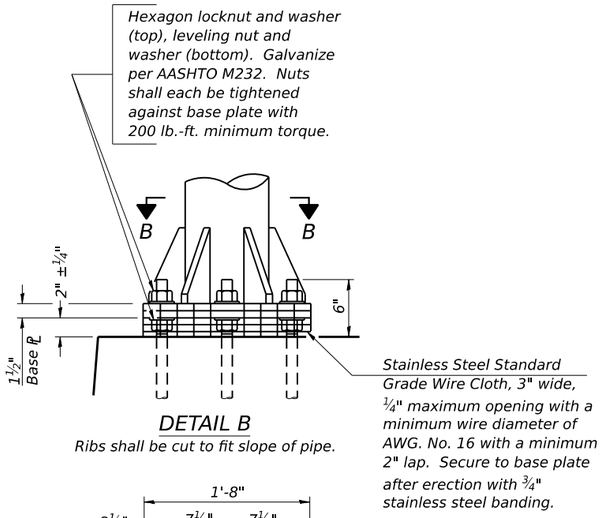

DETAIL B

Ribs shall be cut to fit slope of pipe.

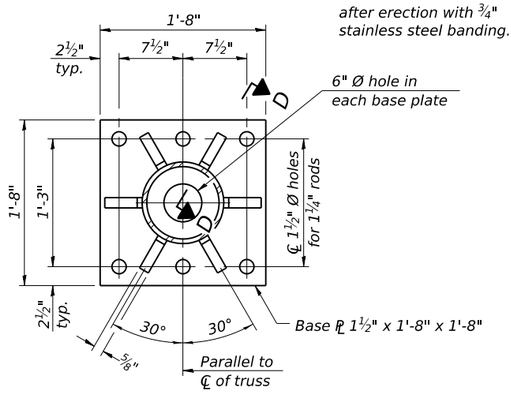

SECTION B-B

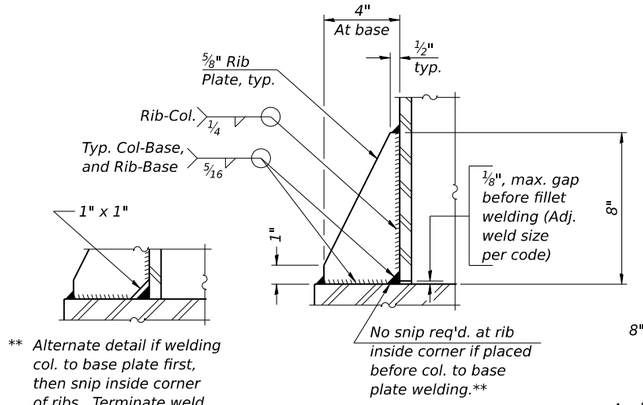

SECTION D-D

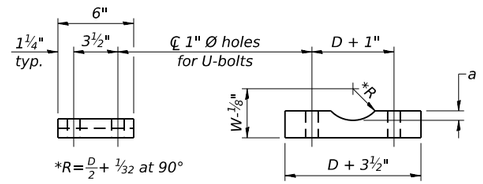

D = Outside Diameter of Chord.
For W, see Base Sheet OS-A-6.

SADDLE SHIM DETAIL

ASTM B26 Alloy 356-F
or
ASTM B209 Alloy 6061-T651
(4 required per sign truss)

Truss Chord Nominal Dia.	a
5"	¾"
5½"	13/16"
6"	⅞"
6½"	15/16"
7"	1"

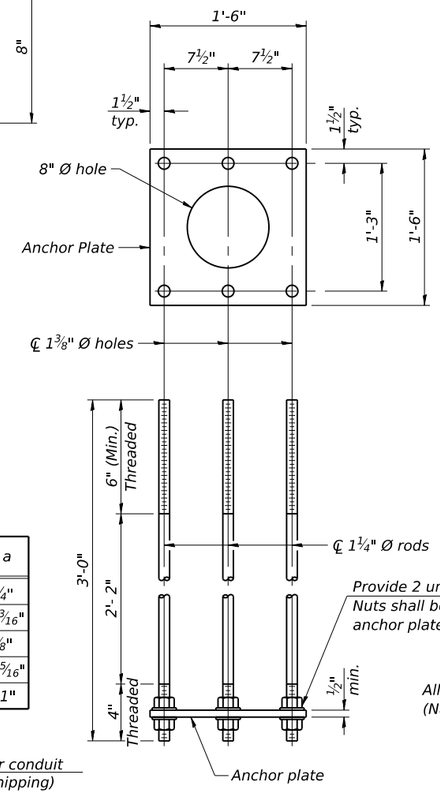

ANCHOR ROD DETAIL

Spread Footing Foundation

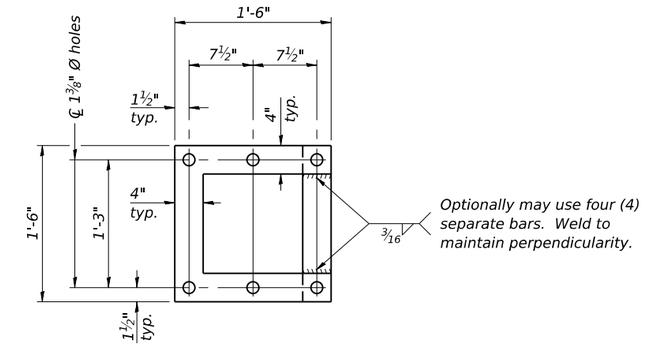

POSITIONING PLATE(S)

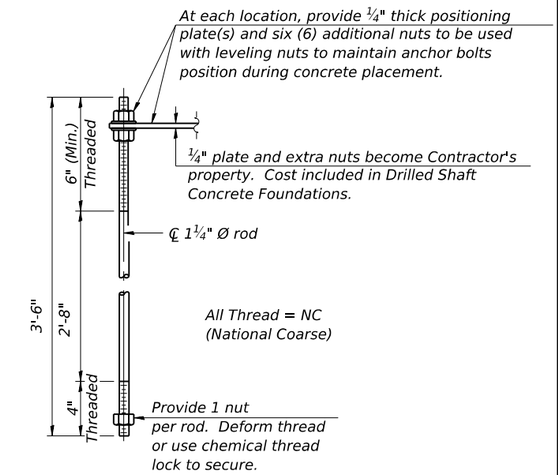

ANCHOR ROD DETAIL

Drilled Shaft Foundation

Anchor rods shall conform to ASTM F1554 Grade 105. Galvanize upper 12" minimum per AASHTO M232. No welding shall be permitted on rods.

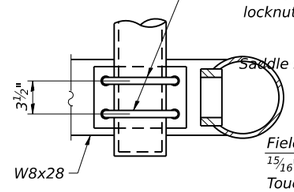

SECTION C-C

(Handhole cover not shown)

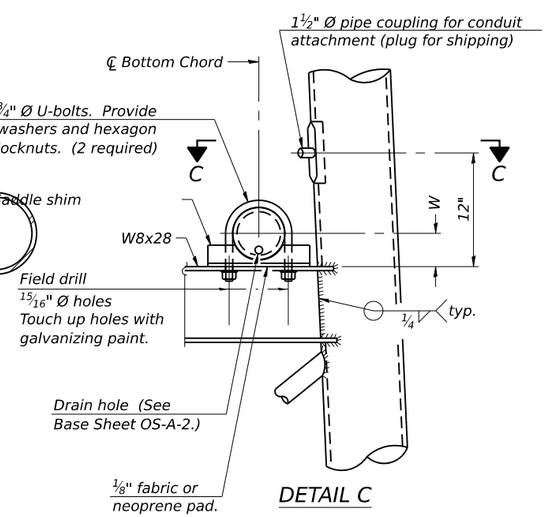

DETAIL C

10" Ø PIPE SUPPORT FRAME DETAILS

OS-A-6A 5-15-2023

HBM ENGINEERING GROUP, LLC

USER NAME =	DESIGNED - JJS, AA	REVISED -
	CHECKED - MI	REVISED -
PLOT SCALE =	DRAWN - AA	REVISED -
PLOT DATE =	CHECKED -	REVISED -

STATE OF ILLINOIS
DEPARTMENT OF TRANSPORTATION

OVERHEAD SIGN STRUCTURES
SUPPORT FRAME DETAILS - ALUMINUM TRUSS

SHEET 6 OF 14 SHEETS

F.A.* RTE.	SECTION	COUNTY	TOTAL SHEETS	SHEET NO.
*	141-1HBR-3 & (9,10)R-3	OGLE	508	281

CONTRACT NO. 64N98

ILLINOIS | FED. AID PROJECT

*FAI ROUTE 39 (I-39) & FAP 567 (IL 38)

MODEL: Default
FILE NAME: P:\2001-818 PTB 194-021 (D2) IL 38 @ I-39 (CBBEL)\Sheet Files\Final Plans\Sign Structures\0171196-D9200120-SignDet06-HBM.dgn
2/18/2025 4:30:24 PM

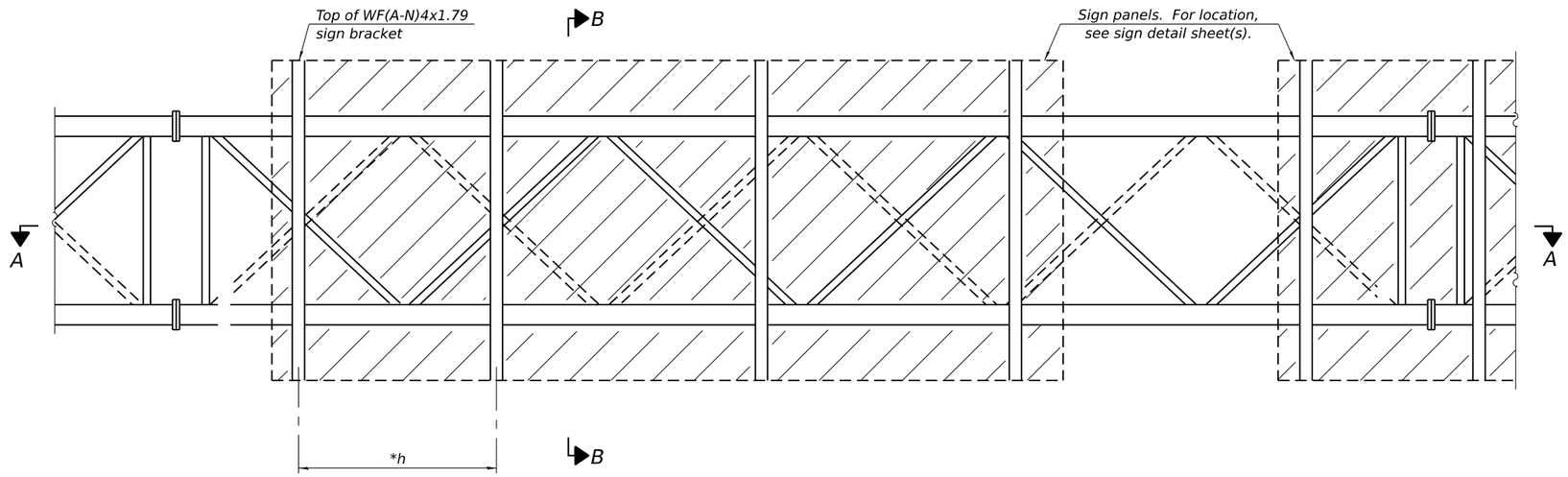

TYPICAL FRONT ELEVATION

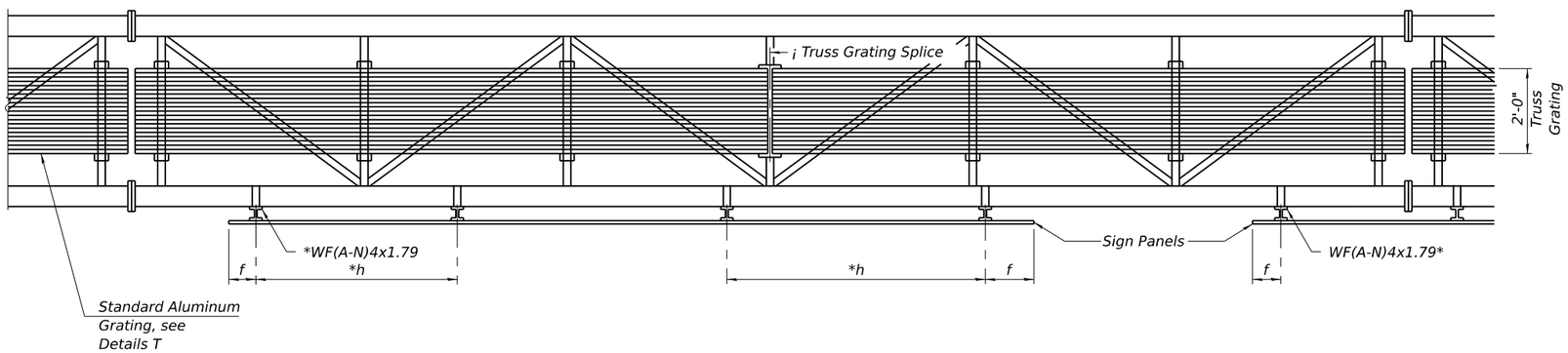

SECTION A-A

Place all sign brackets as close to panel points as practical.

BRACKET TABLE

WF(A-N)4x1.79 ASTM B308, Alloy 6061-T6		
Sign Width		Number Brackets Required
Greater Than	Less Than or Equal To	
	8'-0"	2
8'-0"	14'-0"	3
14'-0"	20'-0"	4
20'-0"	26'-0"	5
26'-0"	32'-0"	6

* Space sign brackets WF(A-N)4x1.79 for efficiency and within limits shown:

f = 12" maximum, 4" minimum (End of sign to ℄ of nearest bracket)
h = 6'-0" maximum (℄ to ℄ sign support brackets, WF(A-N)4x1.7

Notes:
For Detail T and Section B-B, see Base Sheet OS-A-10-NW.
Truss grating to facilitate inspection shall run full length (center to center of support frames) 12"± on overhead trusses. Cost of truss grating is included in "Overhead Sign Structure".
Truss Grating width dimensions are nominal and may vary ½"± based on available standard widths.

OS-A-9-NW 5-15-2023

HBM ENGINEERING GROUP, LLC

USER NAME =	DESIGNED - JJS, AA	REVISED -
	CHECKED - MI	REVISED -
PLOT SCALE =	DRAWN - AA	REVISED -
PLOT DATE =	CHECKED -	REVISED -

STATE OF ILLINOIS
DEPARTMENT OF TRANSPORTATION

OVERHEAD SIGN STRUCTURES
ALUMINUM WALKWAY DETAILS

SHEET 7 OF 14 SHEETS

F.A.* RTE.	SECTION	COUNTY	TOTAL SHEETS	SHEET NO.
*	141-1HBR-3 & (9,10)R-3	OGLE	508	282
		CONTRACT NO. 64N98		
	ILLINOIS	FED. AID PROJECT		

*FAI ROUTE 39 (I-39) & FAP 567 (IL 38)

MODEL: Default
FILE NAME: P:\2001-818 PTB 194-021 (D2) IL 38 @ I-39 (CBBEL)\Sheet Files\Final Plans\Sign Structures\0171196-D9200120-SignDet07-HBM.dgn
2/18/2025 4:30:25 PM

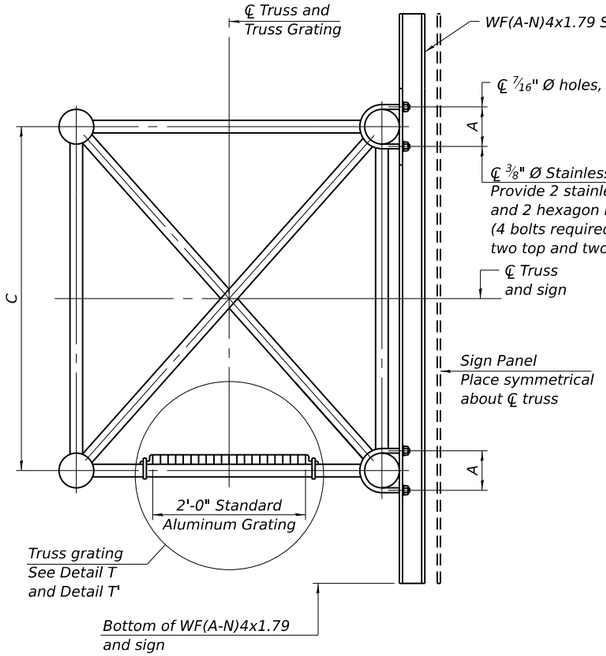

Sign shall be even with the top of the bracket, but it may extend no more than 6" above the top of the bracket for field adjustments.

SECTION B-B

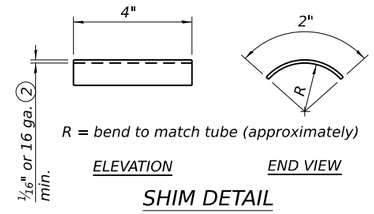

SHIM DETAIL

(1) Drilling holes in grating may be done in shop or field, based on Contractor's preference and subject to accurate alignment.

(2) Stainless steel shims shall be placed as shown in Detail T if needed to compensate for alignment variations between horizontal and diagonal pipes beyond adjustment provided by angles. Thicker shims may be used subject to shims performing properly.

(3) Tube to grating gap may vary from 0 to 1/2", max. to align walkway, allow for camber, etc.

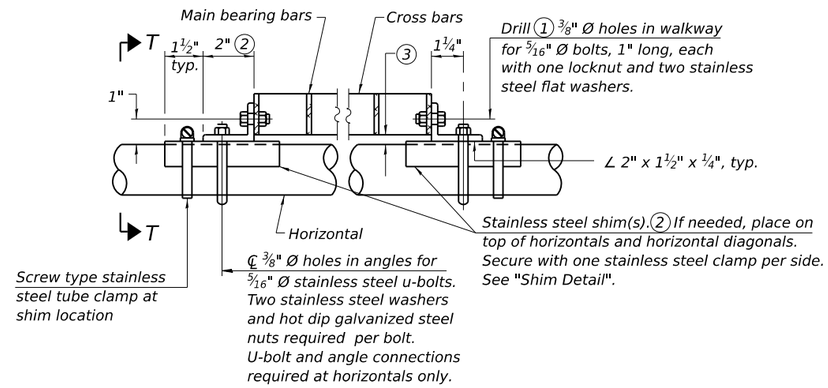

DETAIL T

(Continuous Truss grating)

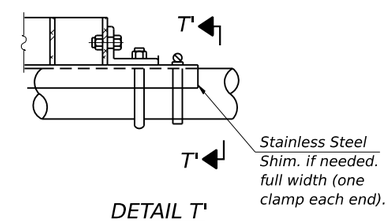

DETAIL T'

(Truss grating splice)

Details not shown same as Detail T.
Alternate materials may be used subject to the Engineer's review and approval.

SPECIFICATIONS FOR STANDARD ALUMINUM GRATING

Main Bearing Bars shall be 3/16" x 1 1/2" on 1 3/16" centers and conform to ASTM B221 Alloy 6061-T6.

Cross bars shall be 3/16" x 1 1/2" on 4" centers and conform to ASTM B221 Alloy 6063-T5 or 6061-T6.

OR

Aluminum Grating with modified "t" sections for main bearing bars shall meet the following requirements:

Main bars shall conform to ASTM B221 Alloy 6061-T6 and have a minimum section modulus equal to 0.0705 in.³ per bar, a depth of 1 1/2", spaced on 1 3/16" centers.

Cross bars shall conform to ASTM B221 Alloy 6063-T5 or T-42 and spaced on 4" centers.

Sign Number	Structure Number	†Station	A	C
1	2S071S038R000.0	1656+86.66	6 1/2"	4'-6"
4	2S071S038L000.0	2673+91.44	6"	4'-6"
5	2S071I039L099.5	42+50	8"	5'-3"

†Sign structure stations measured along the following Baselines:

2S071S038R000.0 - Prop. ℄ EB IL Rte. 38
2S071S038L000.0 - Prop. ℄ WB IL Rte. 38
2S071I039L099.5 - Prop. ℄ NW Ramp (I-39 Exit Ramp to IL Rte. 38)

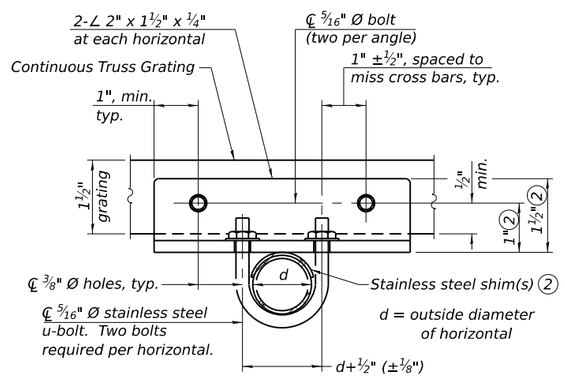

SECTION T-T

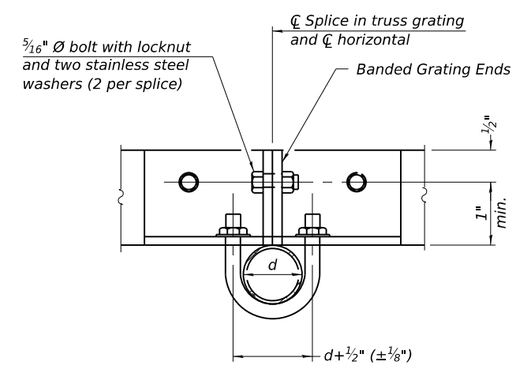

SECTION T'-T'

OS-A-10-NW 5-15-2023

MODEL: Default
FILE NAME: P:\2001-818 PTB 194-021 (D2) IL 38 @ I-39 (CBBEL)\Sheet Files\Final Plans\Sign Structures\0171196-D9200120-SignDet08-HBM.dgn

HBM ENGINEERING GROUP, LLC

USER NAME =	DESIGNED - JJS, AA	REVISED -
	CHECKED - MI	REVISED -
PLOT SCALE =	DRAWN - AA	REVISED -
PLOT DATE =	CHECKED -	REVISED -

STATE OF ILLINOIS
DEPARTMENT OF TRANSPORTATION

OVERHEAD SIGN STRUCTURES
ALUMINUM WALKWAY DETAILS

SHEET 8 OF 14 SHEETS

F.A.* RTE.	SECTION	COUNTY	TOTAL SHEETS	SHEET NO.
*	141-1HBR-3 & (9,10)R-3	OGLE	508	283
		CONTRACT NO. 64N98		
	ILLINOIS	FED. AID PROJECT		

*FAI ROUTE 39 (I-39) & FAP 567 (IL 38)

2/18/2025 4:30:26 PM

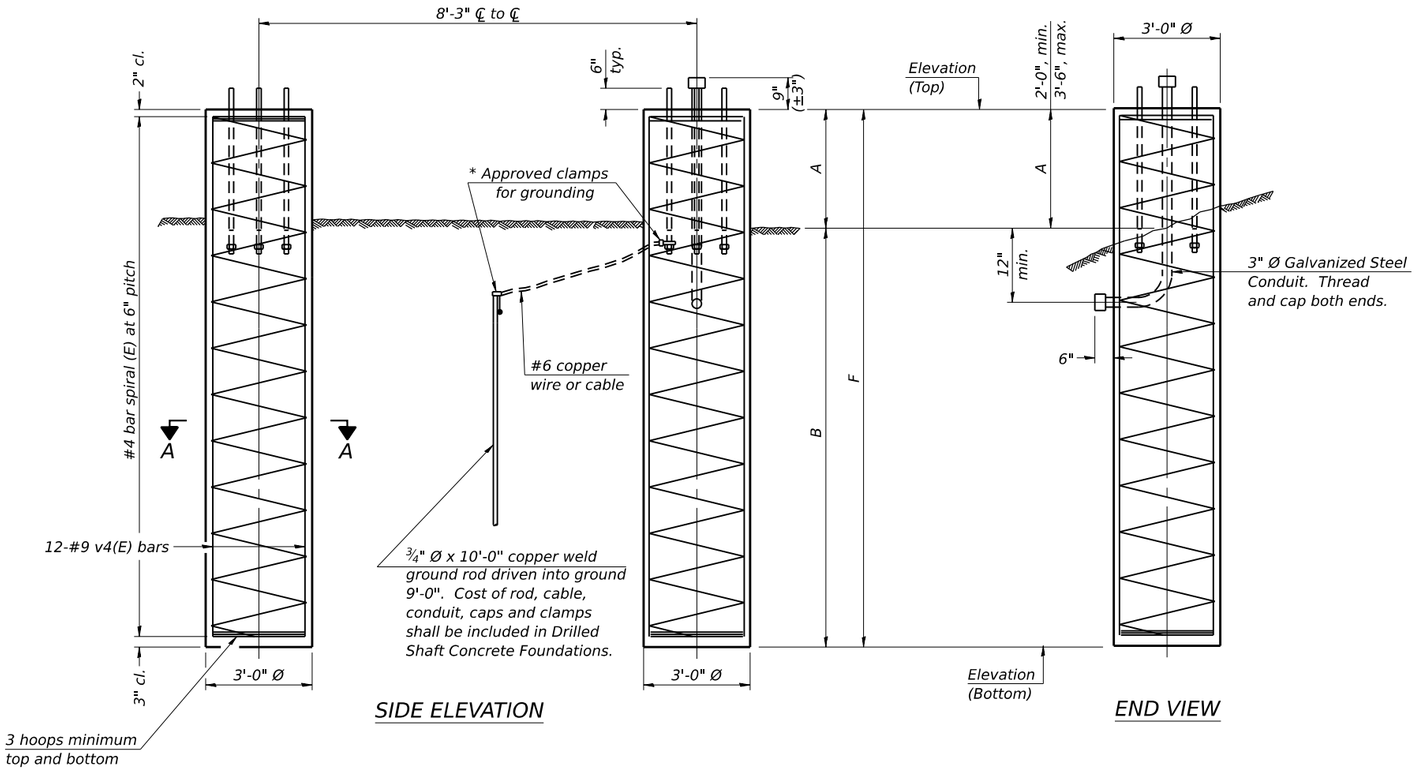

SIDE ELEVATION

END VIEW

BAR LIST - EACH FOUNDATION

Bar	Number	Size	Length	Shape
v4(E)	16	#9	F less 5"	———
#4 bar spiral (E) - see Side Elevation				

NOTES:

The foundation dimensions shown are based on the presence of mostly cohesive soils with an average Unconfined Compressive Strength (Qu) of at least 1.25 tsf, which must be determined by previous soil investigations at the jobsite. When other conditions are indicated, the boring data will be included in the plans and the foundation dimensions shown will be the result of site specific designs.

If the conditions encountered are different than those indicated, the Contractor shall notify the Engineer to determine if the foundation dimensions need to be modified. If dimensions "B" or "F" are revised by more than 12" by the Contractor, "as-built" plans shall be prepared and submitted to the District Bureau of Operations for future reference.

No sonotubes or decomposable forms shall be used below the lower conduit entrance.

Permanent metal forms or other shielding may not be left in place below that elevation without the Engineer's written permission.

Concrete shall be placed monolithically, without construction joints.

Backfill shall be placed per Article 502 of Standard Specification and prior to erection of support column.

A normal surface finish followed by a Concrete Sealer application will be required on concrete surfaces above the lowest elevation 6" below finished ground line. Cost included in Drilled Shaft Concrete Foundation.

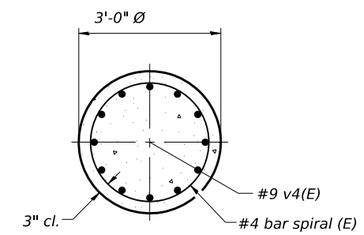

SECTION A-A

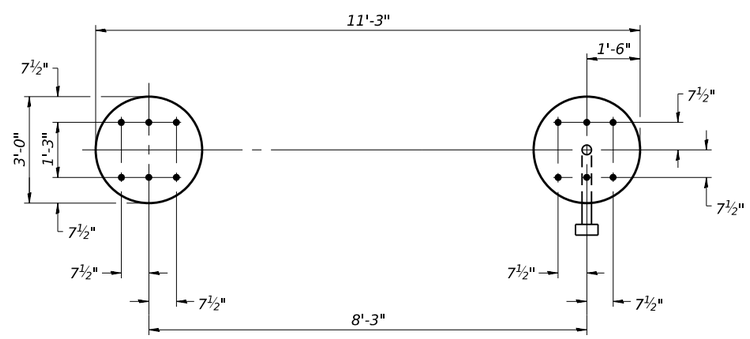

PLAN

For anchor rod size and placement, see Support Frame Detail Sheet.

* Anchor rod shall be ground or filed to bright metal at clamp and cable connection location.

DETAILS FOR 10" Ø SUPPORT FRAME TYPE I-A or II-A TRUSS

Sign Number	Structure Number	†Station	Left Foundation					Right Foundation					Class DS Concrete (Cu. Yds.)
			Elevation Top	Elevation Bottom	A	B	F	Elevation Top	Elevation Bottom	A	B	F	
1	2S071S038R000.0	1656+86.66	818.91	792.91	3'-6"	22'-6"	26'-0"	812.07	784.07	3'-6"	24'-6"	28'-0"	28.3
4	2S071S038L000.0	2673+91.44	815.68	791.68	3'-6"	20'-6"	24'-0"	815.57	770.57	3'-6"	41'-6"	45'-0"	36.2
5	2S071I039L099.5	42+50	802.85	776.53	2'-3⅞"	24'-0"	26'-3⅞"	802.85	778.89	2'-11½"	21'-0"	23'-11½"	26.4

†Sign Structure Stations are measured along the following Baselines:

2S071S038R000.0 - Prop. ℄ EB IL Rte. 38
2S071S038L000.0 - Prop. ℄ WB IL Rte. 38
2S071I039L099.5 - Prop. ℄ NW Ramp (I-39 SB Exit Ramp to IL Rte. 38)

OS4-F3 5-15-2023

HBM ENGINEERING GROUP, LLC

USER NAME =	DESIGNED - JJS, AA	REVISED -
	CHECKED - MI	REVISED -
PLOT SCALE =	DRAWN - AA	REVISED -
PLOT DATE =	CHECKED -	REVISED -

STATE OF ILLINOIS
DEPARTMENT OF TRANSPORTATION

OVERHEAD SIGN STRUCTURES
DRILLED SHAFT DETAILS

SHEET 9 OF 14 SHEETS

F.A.* RTE.	SECTION	COUNTY	TOTAL SHEETS	SHEET NO.
*	141-1HBR-3 & (9,10)R-3	OGLE	508	284
		CONTRACT NO. 64N98		
	ILLINOIS	FED. AID PROJECT		

*FAI ROUTE 39 (I-39) & FAP 567 (IL 38)

MODEL: Default
FILE NAME: P:\2001-818 PTB 194-021 (D2) IL 38 @ I-39 (CBBEL)\Sheet Files\Final Plans\Sign Structures\0171196-D9200120-SignDet11-HBM.dgn
2/18/2025 4:30:29 PM

Illinois Department of Transportation
Division of Highways
IDOT

SOIL BORING LOG

Page 1 of 1

Date 7/10/24

ROUTE FAI 39 & FAP 567 DESCRIPTION P92-016-09 - Overhead sign truss LOGGED BY W. Garza

SECTION 141-1HBR-3 & (9,10)R-3 LOCATION Dement, SE 1/4 & NE 1/4 20, SEC. , TWP. 40N, RNG. 2E

COUNTY Ogle DRILLING METHOD Hollow Stem Auger HAMMER TYPE CME-45 Automatic

STRUCT. NO.
Station

Latitude 41° 56' 04.32" Longitude -89° 01' 38.08"
Northing 1,920,729.2580 Easting 2,606,602.1002

BORING NO. OHS 1
Station 656+76
Offset 1.00ft Lt
Ground Surface Elev. 816.90 ft

Surface Water Elev. ft
Stream Bed Elev. ft
Groundwater Elev.:
First Encounter ft
Upon Completion ft
After Hrs. ft

Description	Elev.	DEPTH (ft)	BLOWS (/6")	UCS Qu (tsf)	MOIST (%)
MEDIUM dark brown SILTY CLAY LOAM	815.40			0.6 P	14.7
DENSE tan SANDY GRAVEL	813.40		14 14 29		9.7
VERY DENSE light gray SANDY GRAVEL	810.90	-5	23 25 30		4.3
VERY DENSE tan SANDY GRAVEL	808.40		20 35 23		8.3
MEDIUM light gray DIRTY SAND	805.40	-10	10 13 15		8.1
DENSE light gray SANDY GRAVEL	803.40		22 22 16		6.1
STIFF gray SANDY LOAM with GRAVEL	800.90	-15	6 5 6	1.2 P	10.4
STIFF gray CLAY LOAM TILL	798.40		6 8 10	1.8 P	20.8
No recovery		-20	8		
No recovery *(continued)*	795.90		11 11		
STIFF gray SILTY CLAY LOAM with TILL	793.40		3 3 5	2.0 B	16.5
STIFF dark gray SILTY CLAY LOAM with CONCRETE FRAGMENTS (old road?)	790.90	-25	7 5 8	1.1 B	23.8
End of Boring		-40			

Northing and Easting were calculated using the ILHP-WF coordinate system

The Unconfined Compressive Strength (UCS) Failure Mode is indicated by (B-Bulge, S-Shear, P-Penetrometer)
The SPT (N value) is the sum of the last two blow values in each sampling zone (AASHTO T206)

BBS, from 137 (Rev. 8-99)

Illinois Department of Transportation
Division of Highways
IDOT

SOIL BORING LOG

Page 1 of 1

Date 7/9/24

ROUTE FAI 39 & FAP 567 DESCRIPTION P92-016-09 - Overhead sign truss LOGGED BY W. Garza

SECTION 141-1HBR-3 & (9,10)R-3 LOCATION Dement, SE 1/4 & NE 1/4 20, SEC. , TWP. 40N, RNG. 2E

COUNTY Ogle DRILLING METHOD Hollow Stem Auger HAMMER TYPE CME-45 Automatic

STRUCT. NO.
Station

Latitude 41° 56' 03.28" Longitude -89° 01' 37.76"
Northing 1,920,623.9086 Easting 2,606,627.9930

BORING NO. OHS 2
Station 657+00
Offset 111.00ft Rt
Ground Surface Elev. 803.10 ft

Surface Water Elev. ft
Stream Bed Elev. ft
Groundwater Elev.:
First Encounter 788.1 ft ▼
Upon Completion 783.6 ft ▽
After Hrs. ft

Description	Elev.	DEPTH (ft)	BLOWS (/6")	UCS Qu (tsf)	MOIST (%)
MEDIUM black SILTY CLAY LOAM	801.60			0.9 P	31.1
STIFF gray SILTY CLAY LOAM TILL	800.10		4 6 5	1.1 P	14.2
VERY STIFF gray CLAY LOAM TILL	797.60	-5	4 6 7	2.1 B	24.9
VERY STIFF light gray CLAY LOAM TILL	794.60		5 6 8	2.5 B	20.1
MEDIUM tan/light gray SAND with MEDIUM GRAVEL	792.60	-10	2 4 7		8.7
MEDIUM light gray MOIST MEDIUM SAND	789.60		8 13 14		11.6
MEDIUM gray SANDY LOAM with MEDIUM SAND LENS BOTTOM 6"	787.10	▼ -15	4 6 12	0.9 P	12.7
VERY DENSE light gray WEATHERED LIMESTONE	785.10		40 100 for 5.5"		17.8
VERY DENSE light gray WEATHERED LIMESTONE		▽ -20	100 for		
	782.60		1"		
End of Boring		-40			

Northing and Easting were calculated using the ILHP-WF coordinate system

The Unconfined Compressive Strength (UCS) Failure Mode is indicated by (B-Bulge, S-Shear, P-Penetrometer)
The SPT (N value) is the sum of the last two blow values in each sampling zone (AASHTO T206)

BBS, from 137 (Rev. 8-99)

MODEL: Default
FILE NAME: P:\2001-818 PTB 194-021 (D2) IL 38 @ I-39 (CBBEL)\Sheet Files\Final Plans\Sign Structures\0171196-09200120-SignDet12-HBM.dgn
2/18/2025 4:56:43 PM

HBM ENGINEERING GROUP, LLC

USER NAME =	DESIGNED - JJS, GFA	REVISED -
	CHECKED - MI	REVISED -
PLOT SCALE =	DRAWN - GFA	REVISED -
PLOT DATE =	CHECKED - MI	REVISED -

STATE OF ILLINOIS
DEPARTMENT OF TRANSPORTATION

SOIL BORINGS (SHEET 1 OF 5)

SHEET 10 OF 14 SHEETS

F.A.* RTE.	SECTION	COUNTY	TOTAL SHEETS	SHEET NO.
*	141-1HBR-3 & (9,10)R-3	OGLE	508	285

CONTRACT NO. 64N98

ILLINOIS FED. AID PROJECT

*FAI ROUTE 39 (I-39) & FAP 567 (IL 38)

Illinois Department of Transportation
Division of Highways
IDOT

SOIL BORING LOG

Page 1 of 1

Date 7/23/24

ROUTE FAI 39 & FAP 567 DESCRIPTION P92-016-09 - Overhead sign truss LOGGED BY W. Garza

SECTION 141-1HBR-3 & (9,10)R-3 LOCATION Dement, SE 1/4 & NE 1/4 20, SEC. , TWP. 40N, RNG. 2E

COUNTY Ogle DRILLING METHOD Hollow Stem Auger HAMMER TYPE CME-45 Automatic

STRUCT. NO.
Station

Latitude 41° 56' 03.65"
Longitude -89° 01' 34.86"
Northing 1,920,663.9934
Easting 2,606,846.8025

BORING NO. OHS 3
Station 659+20
Offset 74.00ft Rt
Ground Surface Elev. 814.90 ft

Surface Water Elev. ft
Stream Bed Elev. ft

Groundwater Elev.:
First Encounter 790.4 ft ▼
Upon Completion 790.4 ft ▽
After ____ Hrs. ft

Description	Elev.	DEPTH (ft)	BLOWS (/6")	UCS Qu (tsf)	MOIST (%)
STIFF dark brown SILTY CLAY LOAM	813.40			1.9 P	25.3
MEDIUM tan MEDIUM SAND	811.40		11 11 13		13.3
DENSE tan SANDY GRAVEL	808.90	-5	11 15 17		9.1
VERY SOFT gray SANDY LOAM TOP 6" DENSE tan SANDY GRAVEL	807.40 806.40		4 13 20	0.2 P	19.0/7.9
MEDIUM light gray SANDY GRAVEL	803.40	-10	15 11 6		7.1
VERY STIFF gray CLAY LOAM TILL	801.40		3 5 8	2.0 B	20.1
VERY STIFF gray CLAY LOAM TILL	798.90	-15	4 8 10	2.7 B	13.5
VERY STIFF gray SILTY CLAY LOAM TILL	796.40		6 12 14	2.5 B	15.6
No recovery		-20	5		
No recovery *(continued)*	793.40		6 8		
MEDIUM gray FINE SAND	791.40		3 6 9		18.6
MEDIUM gray SANDY GRAVEL	788.90	-25	4 10 13		13.5
MEDIUM gray MEDIUM COARSE SAND	785.90		2 5 8		13.3
STIFF light gray SILTY LOAM with SAND STONE LENS	783.40	-30	3 7 13	2.0 P	21.9
VERY DENSE tan WEATHERED LIMESTONE	781.40		21 20 31		8.1
VERY DENSE light gray WEATHERED LIMESTONE with SILT LENS	778.90	-35	5 4 50 for 4"		23.1
End of Boring		-40			

Northing and Easting were calculated using the ILHP-WF coordinate system

The Unconfined Compressive Strength (UCS) Failure Mode is indicated by (B-Bulge, S-Shear, P-Penetrometer)
The SPT (N value) is the sum of the last two blow values in each sampling zone (AASHTO T206)

BBS, from 137 (Rev. 8-99)

Illinois Department of Transportation
Division of Highways
IDOT

SOIL BORING LOG

Page 1 of 2

Date 7/24/24

ROUTE FAI 39 & FAP 567 DESCRIPTION P92-016-09 - Overhead sign truss LOGGED BY W. Garza

SECTION 141-1HBR-3 & (9,10)R-3 LOCATION Dement, SE 1/4 & NE 1/4 20, SEC. , TWP. 40N, RNG. 2E

COUNTY Ogle DRILLING METHOD Hollow Stem Auger HAMMER TYPE CME-45 Automatic

STRUCT. NO.
Station

Latitude 41° 56' 05.21"
Longitude -89° 01' 19.25"
Northing 1,920,838.2270
Easting 2,608,024.1910

BORING NO. OHS 4
Station 671+03
Offset 65.50ft Lt
Ground Surface Elev. 815.50 ft

Surface Water Elev. ft
Stream Bed Elev. ft

Groundwater Elev.:
First Encounter 791.0 ft ▼
Upon Completion Wash ft
After ____ Hrs. 790.5 ft ▽

Description	Elev.	DEPTH (ft)	BLOWS (/6")	UCS Qu (tsf)	MOIST (%)
LOOSE brown DIRTY SAND	814.50				9.9
STIFF gray SILTY CLAY LOAM	812.00		2 2 5	1.2 B	22.3
STIFF gray/darkgray SILTY CLAY LOAM	809.50	-5	3 4 7	1.7 B	25.0
VERY STIFF gray CLAY LOAM TILL	807.00		3 4 6	2.3 B	16.7
MEDIUM gray SANDY LOAM	804.50	-10	3 5 7	0.6 S	18.7
VERY STIFF gray CLAY LOAM with AGGS	802.00		8 8 8	2.1 B	22.1
VERY STIFF gray CLAY LOAM	799.50	-15	3 5 9	2.5 B	21.3
STIFF dark gray LOAM with AGGS	797.00		6 8 10	1.6 P	14.9
STIFF gray CLAY LOAM		-20	2		
STIFF gray CLAY LOAM *(continued)*	794.00		5 6	1.5 B	32.7
MEDIUM light gray VERY COARSE MOIST MEDIUM SAND	792.00		6 8 13		6.3
MEDIUM light gray CLEAN COARSE SAND	789.50	-25	6 9 12		10.5
MEDIUM light gray CLEAN COARSE SAND 12" Wash	787.00		2 5 10		
MEDIUM light gray VERY FINE SILTY SAND 5' Run	784.50	-30	9 13 17		18.6
DENSE light gray FINE SAND 5' Run	779.50	-35	5 15 16		
		-40	3		

Northing and Easting were calculated using the ILHP-WF coordinate system

The Unconfined Compressive Strength (UCS) Failure Mode is indicated by (B-Bulge, S-Shear, P-Penetrometer)
The SPT (N value) is the sum of the last two blow values in each sampling zone (AASHTO T206)

BBS, from 137 (Rev. 8-99)

Illinois Department of Transportation
Division of Highways
IDOT

SOIL BORING LOG

Date 7/24/24

ROUTE FAI 39 & FAP 567 **DESCRIPTION** P92-016-09 - Overhead sign truss **LOGGED BY** W. Garza

SECTION 141-1HBR-3 & (9,10)R-3 **LOCATION** Dement, SE 1/4 & NE 1/4 20, **SEC.** , **TWP.** 40N, **RNG.** 2E

COUNTY Ogle **DRILLING METHOD** Hollow Stem Auger **HAMMER TYPE** CME-45 Automatic

STRUCT. NO.
Station

Latitude 41° 56' 05.21" **Northing** 1,920,838.2270
Longitude -89° 01' 19.25" **Easting** 2,608,024.1910

BORING NO. OHS 4
Station 671+03
Offset 65.50ft Lt
Ground Surface Elev. 815.50 ft

Surface Water Elev. ft
Stream Bed Elev. ft

Groundwater Elev.:
First Encounter 791.0 ft
Upon Completion Wash ft
After Hrs. 790.5 ft

Description	Elev.	DEPTH (ft)	BLOWS (/6")	UCS Qu (tsf)	MOIST (%)
LOOSE light gray VERY FINE SILTY SAND			4 6		19.9
5' Run *(continued)*	773.00				
STIFF dark gray CLAY LOAM	769.50	-45	2 4 6	1.1 B	26.2
End of Boring		-50, -55, -60			

Northing and Easting were calculated using the ILHP-WF coordinate system

The Unconfined Compressive Strength (UCS) Failure Mode is indicated by (B-Bulge, S-Shear, P-Penetrometer)
The SPT (N value) is the sum of the last two blow values in each sampling zone (AASHTO T206)

BBS, from 137 (Rev. 8-99)

MODEL: Default
FILE NAME: P:\2001-818 PTB 194-021 (D2) IL 38 @ I-39 (CBBEL)\Sheet Files\Final Plans\Sign Structures\0171196-09200120-SignDet14-HBM.dgn

HBM ENGINEERING GROUP, LLC

USER NAME =	DESIGNED - JJS, GFA	REVISED -	
	CHECKED - MI	REVISED -	
PLOT SCALE =	DRAWN - GFA	REVISED -	
PLOT DATE =	CHECKED - MI	REVISED -	

STATE OF ILLINOIS
DEPARTMENT OF TRANSPORTATION

SOIL BORINGS (SHEET 3 OF 5)

SHEET 12 OF 14 SHEETS

F.A.* RTE.	SECTION	COUNTY	TOTAL SHEETS	SHEET NO.
*	141-1HBR-3 & (9,10)R-3	OGLE	508	287
		CONTRACT NO. 64N98		
	ILLINOIS	FED. AID PROJECT		

*FAI ROUTE 39 (I-39) & FAP 567 (IL 38)

2/18/2025 4:56:50 PM

Illinois Department of Transportation
Division of Highways
IDOT

SOIL BORING LOG

Page 1 of 1

Date 7/24/24

ROUTE FAI 39 & FAP 567 DESCRIPTION P92-016-09 - Overhead sign truss LOGGED BY W. Garza

SECTION 141-1HBR-3 & (9,10)R-3 LOCATION Dement, SE 1/4 & NE 1/4 20, SEC. , TWP. 40N, RNG. 2E

COUNTY Ogle DRILLING METHOD Hollow Stem Auger HAMMER TYPE CME-45 Automatic

STRUCT. NO.
Station

Latitude 41° 56' 05.13" Longitude -89° 01' 15.82"
Northing 1,920,832.9492 Easting 2,608,283.8790

BORING NO. OHS 5
Station 673+57
Offset 53.00ft Lt
Ground Surface Elev. 811.20 ft

Surface Water Elev. ft
Stream Bed Elev. ft
Groundwater Elev.:
First Encounter 791.7 ft ▼
Upon Completion 786.2 ft ▽
After ___ Hrs. ft

Description	Elev.	DEPTH (ft)	BLOWS (/6")	UCS Qu (tsf)	MOIST (%)
STIFF dark brown SILTY CLAY LOAM	809.20			1.1 P	25.6
VERY STIFF gray SILTY CLAY LOAM	807.70		2 5 7	2.1 B	20.8
MEDIUM dark gray LOAM with AGGS	804.70	-5	4 4 6	0.8 B	14.8
MEDIUM light gray DIRTY SANDY GRAVEL	802.70		11 12 5		10.5
MEDIUM tan SANDY GRAVEL	799.70	-10	4 13 12		6.6
STIFF gray CLAY LOAM TILL	797.70		4 8 9	1.7 B	20.0
STIFF light gray CLAY LOAM	794.70	-15	3 4 5	1.5 B	29.7
MEDIUM tan MOIST SANDY GRAVEL	792.70		5 8 11		8.3
▼		-20	4		
MEDIUM light gray MEDIUM SAND *(continued)*	790.20		10 14		8.4
MEDIUM light gray MEDIUM SAND	787.70		3 6 16		12.4
MEDIUM light gray CLEAN COARSE SAND	785.20	▽ -25	4 4 13		
MEDIUM light gray FINE SAND	782.70		4 12 16		
DENSE light gray FINE SAND	780.20	-30	11 16 20		18.9
DENSE light gray VERY FINE SILTY SAND	777.70		10 11 20		14.7
End of Boring		-40			

Northing and Easting were calculated using the ILHP-WF coordinate system

The Unconfined Compressive Strength (UCS) Failure Mode is indicated by (B-Bulge, S-Shear, P-Penetrometer)
The SPT (N value) is the sum of the last two blow values in each sampling zone (AASHTO T206)

BBS, from 137 (Rev. 8-99)

Illinois Department of Transportation
Division of Highways
IDOT

SOIL BORING LOG

Page 1 of 1

Date 7/10/24

ROUTE FAI 39 & FAP 567 DESCRIPTION P92-016-09 - Overhead sign truss LOGGED BY W. Garza

SECTION 141-1HBR-3 & (9,10)R-3 LOCATION Dement, SE 1/4 & NE 1/4 20, SEC. , TWP. 40N, RNG. 2E

COUNTY Ogle DRILLING METHOD Hollow Stem Auger HAMMER TYPE CME-45 Automatic

STRUCT. NO.
Station

Latitude 41° 56' 04.60" Longitude -89° 01' 15.82"
Northing 1,920,780.1081 Easting 2,608,284.3131

BORING NO. OHS 6
Station 673+60
Offset 1.00ft Lt
Ground Surface Elev. 813.60 ft

Surface Water Elev. ft
Stream Bed Elev. ft
Groundwater Elev.:
First Encounter 791.6 ft ▼
Upon Completion 791.1 ft ▽
After ___ Hrs. ft

Description	Elev.	DEPTH (ft)	BLOWS (/6")	UCS Qu (tsf)	MOIST (%)
MEDIUM tan/brown LOAM	811.60			0.6 P	18.7
MEDIUM tan DIRTY SAND	810.10		12 14 12		8.6
STIFF gray SILTY CLAY LOAM with AGG	807.60	-5	5 3 6	1.3 B	16.8
STIFF gray SILTY CLAY LOAM with DIRTY AGG LENS	805.10		2 7 9	1.4 B	23.2
MEDIUM light gray DIRTY SAND with AGG	802.60	-10	14 9 15		5.2
Old pavement Hard drilling					
MEDIUM light gray SANDY LOAM	800.10		5 6 7	0.7 S	11.0
STIFF black SILTY CLAY LOAM	797.60	-15	4 6 7	1.6 P	31.4
STIFF gray CLAY LOAM	794.60		1 3 4	1.2 B	29.9
		-20	3		
MEDIUM light gray MOIST SANDY GRAVEL *(continued)*	792.60		11 16		12.6
▼ ▽					
MEDIUM light gray MEDIUM SAND and GRAVEL	790.10		7 9 13		
MEDIUM light gray MEDIUM SAND	787.60	-25	7 9 17		
End of Boring		-40			

Northing and Easting were calculated using the ILHP-WF coordinate system

The Unconfined Compressive Strength (UCS) Failure Mode is indicated by (B-Bulge, S-Shear, P-Penetrometer)
The SPT (N value) is the sum of the last two blow values in each sampling zone (AASHTO T206)

BBS, from 137 (Rev. 8-99)

MODEL: Default
FILE NAME: P:\2001-818 PTB 194-021 (D2) IL 38 @ I-39 (CBBEL)\Sheet Files\Final Plans\Sign Structures\0171196-09200120-SignDet15-HBM.dgn
2/18/2025 4:56:52 PM

HBM ENGINEERING GROUP, LLC

USER NAME =	DESIGNED - JJS, GFA	REVISED -
	CHECKED - MI	REVISED -
PLOT SCALE =	DRAWN - GFA	REVISED -
PLOT DATE =	CHECKED - MI	REVISED -

STATE OF ILLINOIS
DEPARTMENT OF TRANSPORTATION

SOIL BORINGS (SHEET 4 OF 5)

SHEET 13 OF 14 SHEETS

F.A.* RTE.	SECTION	COUNTY	TOTAL SHEETS	SHEET NO.
*	141-1HBR-3 & (9,10)R-3	OGLE	508	288

CONTRACT NO. 64N98

ILLINOIS | FED. AID PROJECT

*FAI ROUTE 39 (I-39) & FAP 567 (IL 38)

Illinois Department of Transportation
Division of Highways
IDOT

SOIL BORING LOG

Page 1 of 1

Date 1/16/19

ROUTE FAI-39 DESCRIPTION P-92-OHS-19 - Sign Truss I-39 SB @ IL 38 LOGGED BY W. Garza

SECTION LOCATION Denent - SE17, SEC. , TWP. 40N, RNG. 2E

COUNTY Ogle DRILLING METHOD Hollow Stem Auger HAMMER TYPE CME-45 Automatic

STRUCT. NO. 071-037
Station

Latitude 41° 56' 20.66"
Longitude -89° 01' 27.29"

Northing 1,922,393.3791
Easting 2,607,395.5118

BORING NO. B-1
Station 23' S of S Foundation
Offset 37.00ft E of CL SB
Ground Surface Elev. 96.63 ft

Surface Water Elev. ft
Stream Bed Elev. ft

Groundwater Elev.:
First Encounter 89.6 ft ▼
Upon Completion 79.6 ft ▽
After Hrs. ft

Description	Elev.	DEPTH (ft)	BLOWS (/6")	UCS Qu (tsf)	MOIST (%)
MEDIUM brown SILTY CLAY LOAM	94.63			0.8 P	22.0
VERY STIFF gray SILTY CLAY	93.13		8 6 6	2.5 P	23.0
STIFF gray SILTY CLAY	90.63	-5	2 2 5	1.3 P	24.0
STIFF gray SILTY CLAY TILL	88.13		3 3 6	1.2 B	25.0
SOFT tan SANDY LOAM	85.63	-10	2 5 7	0.3 P	14.0
MEDIUM gray SANDY LOAM	83.13		2 4 9	0.8 P	15.0
SOFT gray LOAM with WEATHERED LIMESTONE bottom 2"	80.63	-15	1 2 15	0.4 B	16.0
VERY DENSE tan WEATHERED LIMESTONE Auger Refusal @ 19.0'	77.63		100 for 3"		
End of Boring		-20			

Northing and Easting were calculated using the ILHP-WF coordinate system

The Unconfined Compressive Strength (UCS) Failure Mode is indicated by (B-Bulge, S-Shear, P-Penetrometer)
The SPT (N value) is the sum of the last two blow values in each sampling zone (AASHTO T206)

BBS, from 137 (Rev. 8-99)

Illinois Department of Transportation
Division of Highways
IDOT

SOIL BORING LOG

Page 1 of 1

Date 1/14/19

ROUTE FAI-39 DESCRIPTION P-92-OHS-19 - Sign Truss I-39 SB @ IL 38 LOGGED BY W. Garza

SECTION LOCATION Denent - SE17, SEC. , TWP. 40N, RNG. 2E

COUNTY Ogle DRILLING METHOD Hollow Stem Auger HAMMER TYPE CME-45 Automatic

STRUCT. NO. 071-037
Station

Latitude 41° 56' 20.73"
Longitude -89° 01' 28.53"

Northing 1,922,400.1449
Easting 2,607,301.5412

BORING NO. B-2
Station 16' S of S Foundation
Offset 54.00ft W of CL SB
Ground Surface Elev. 95.60 ft

Surface Water Elev. ft
Stream Bed Elev. ft

Groundwater Elev.:
First Encounter None ft
Upon Completion Dry ft
After Hrs. ft

Description	Elev.	DEPTH (ft)	BLOWS (/6")	UCS Qu (tsf)	MOIST (%)
STIFF brown SILTY CLAY LOAM	93.60			1.1 P	23.0
STIFF brown SILTY CLAY LOAM	92.10		4 7 9	1.1 P	22.0
STIFF gray SILTY CLAY	89.60	-5	5 4 7	1.3 P	26.0
STIFF gray SILTY CLAY TILL	87.10		3 4 5	1.7 B	18.0
STIFF tan SANDY LOAM with SAND LENS	84.60	-10	3 4 5	1.7 B	17.0
VERY DENSE light gray WEATHERED LIMESTONE Auger Refusal @ 14.0'	81.60		59 41 for 1"		
End of Boring		-15			
		-20			

Northing and Easting were calculated using the ILHP-WF coordinate system

The Unconfined Compressive Strength (UCS) Failure Mode is indicated by (B-Bulge, S-Shear, P-Penetrometer)
The SPT (N value) is the sum of the last two blow values in each sampling zone (AASHTO T206)

BBS, from 137 (Rev. 8-99)

MODEL: Default
FILE NAME: P:\2001-818 PTB 194-021 (D2) IL 38 @ I-39 (CBBEL)\Sheet Files\Final Plans\Sign Structures\0171196-D9200120-SignDet16-HBM.dgn
2/18/2025 4:56:55 PM

HBM ENGINEERING GROUP, LLC

USER NAME =	DESIGNED - JJS, GFA	REVISED -
	CHECKED - MI	REVISED -
PLOT SCALE =	DRAWN - GFA	REVISED -
PLOT DATE =	CHECKED - MI	REVISED -

STATE OF ILLINOIS
DEPARTMENT OF TRANSPORTATION

SOIL BORINGS (SHEET 5 OF 5)

SHEET 14 OF 14 SHEETS

F.A.* RTE.	SECTION	COUNTY	TOTAL SHEETS	SHEET NO.
*	141-1HBR-3 & (9,10)R-3	OGLE	508	289

CONTRACT NO. 64N98

ILLINOIS FED. AID PROJECT

*FAI ROUTE 39 (I-39) & FAP 567 (IL 38)

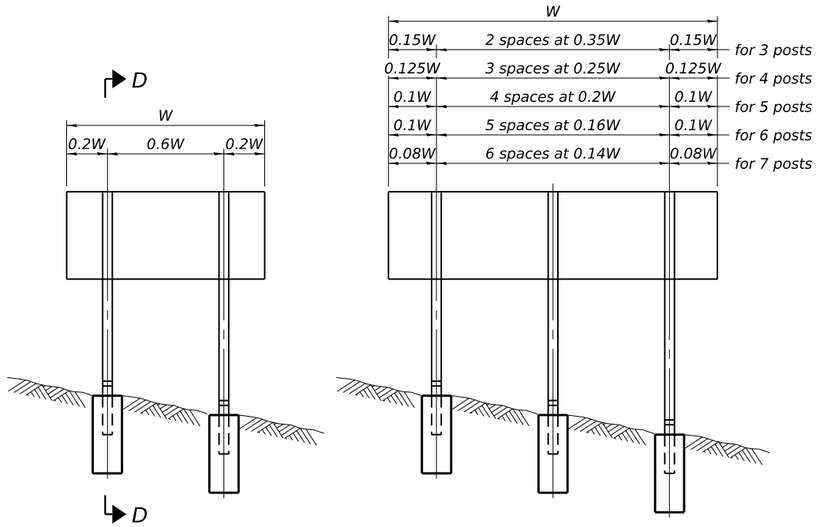

ELEVATION

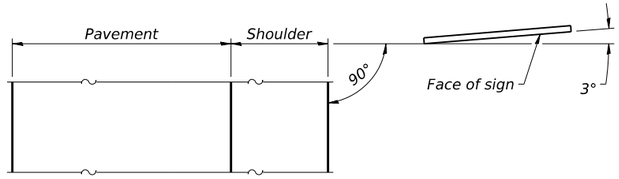

LOCATION SKETCH

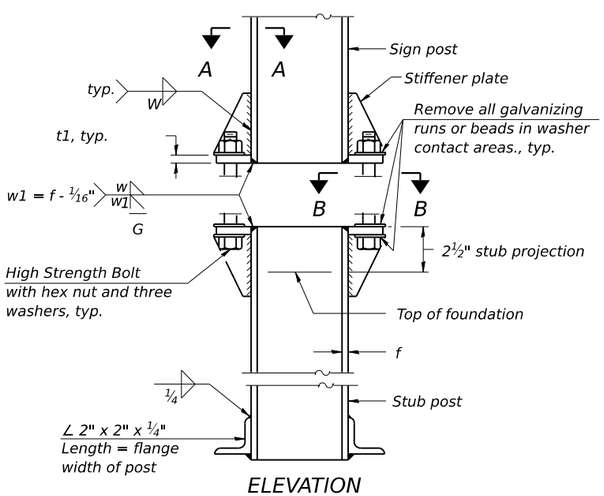

ELEVATION
SIGN POST & STUB POST

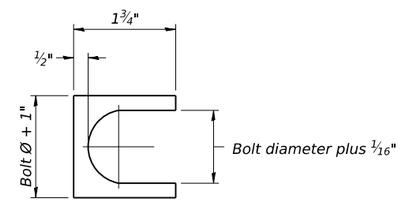

SHIM DETAIL

Furnish two 0.01" thick and two 0.03" thick stainless steel or brass (ASTM B36) shims per post.

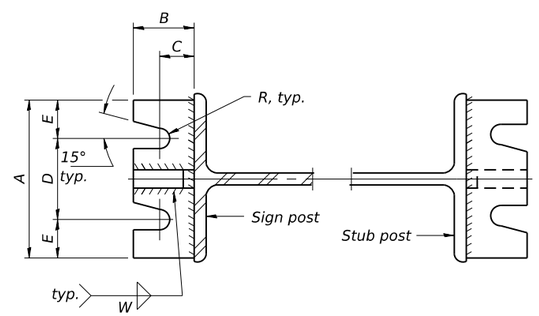

SECTION A-A

SECTION B-B

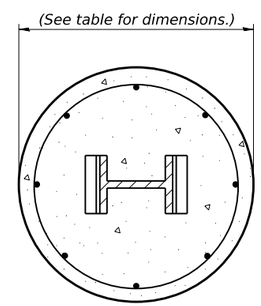

SECTION C-C

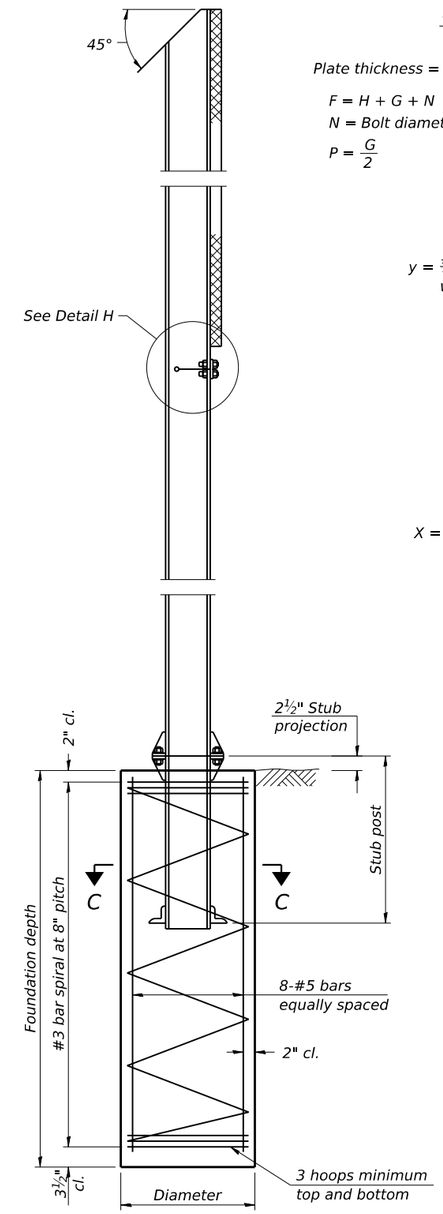

SECTION D-D

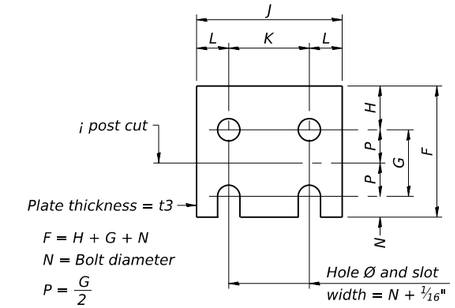

FUSE PLATE DETAIL
(Install with notches down.)

FUSE PLATE DATA		
N = Bolt Diameter	G	H
½"	2"	1⅛"
⅝"	2¼"	1¼"
¾"	2½"	1⅜"
⅞"	2¾"	1½"
1"	3"	1⅝"
1⅛"	3¼"	1¾"
1¼"	3½"	1⅞"

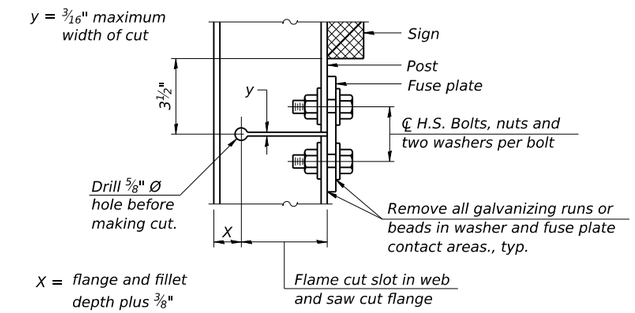

DETAIL H

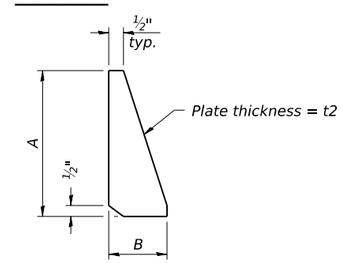

STIFFENER PLATE DETAIL
Diameter

GENERAL NOTES

Posts shall be plumbed by using shims with post-to-stub post connection bolts snug tight only. Final tightening of all High Strength Bolts shall be in accordance with Article 727.05 and threads at the junction of the bolt and nut shall be burred or center punched to prevent the nut from loosening.

LOADING: 80 m.p.h. wind with 30% gust factor, normal to sign.

DESIGN STRESSES:
Structural steel - 20,000 p.s.i.
Reinforcing steel - 20,000 p.s.i.
Concrete - 1,400 p.s.i.
Footing soil pressure - 2,000 p.s.f.

After fabrication, the post, fuse plate and upper 6", min. of the stub post shall be hot-dip galvanized in accordance with AASHTO M111. All bolts, nuts and washers shall be hot-dip galvanized in accordance with AASHTO M232.

Work this sheet with Base Sheet BAW-A-2.

BAW-A-1 5-15-2023

(Sheet 1 of 2)

HBM ENGINEERING GROUP, LLC

USER NAME =	DESIGNED - JJS, AWD	REVISED -	
	CHECKED - MI	REVISED -	
PLOT SCALE =	DRAWN - AWD	REVISED -	
PLOT DATE =	CHECKED -	REVISED -	

STATE OF ILLINOIS
DEPARTMENT OF TRANSPORTATION

BREAK-AWAY WIDE FLANGE
STEEL SIGN POST DETAILS

SHEET 1 OF 3 SHEETS

F.A.* RTE.	SECTION	COUNTY	TOTAL SHEETS	SHEET NO.
*	141-1HBR-3 & (9,10)R-3	OGLE	508	290
		CONTRACT NO. 64N98		
	ILLINOIS	FED. AID PROJECT		

*FAI ROUTE 39 (I-39) & FAP 567 (IL 38)

MODEL: Default
FILE NAME: P:\2001-818 PTB 194-021 (D2) IL 38 @ I-39 (CBBEL)\Sheet Files\Final Plans\Sign Structures\0171196-D9200120-SignDet09-HBM.dgn
2/18/2025 4:30:27 PM

POST	CONCRETE FOUNDATION TABLE								POST TO STUB POST CONNECTION DATA										FUSE PLATE DATA			
	Foundation			Reinforcement				Stub Post														
	Diameter	*Minimum Depth	Concrete ① cu. yds.)	Vertical Bars Length	Bar Spirals Diameter	Bar Spirals Length	lbs. ②	Length	Bolt Size	A	B	C	D	E	t1	t2	R	W	J	K	L	t3
W6x9	2'-0"	6'-0"	0.70	5'-9"	1'-8½"	79'-0"	78	2'-3"	⅝" x 3¼"	6"	2¼"	1¼"	3½"	1¼"	¾"	½"	11/32"	¼"	4"	2¼"	⅞"	¼"
W6x15	2'-0"	6'-0"	0.70	5'-9"	1'-8½"	79'-0"	78	2'-6"	⅝" x 3¼"	6"	2¼"	1¼"	3½"	1¼"	¾"	½"	11/32"	¼"	6"	3½"	1¼"	⅜"
W8x18	2'-0"	6'-0"	0.70	5'-9"	1'-8½"	79'-0"	78	2'-6"	¾" x 3¾"	6"	2½"	1⅜"	3¼"	1⅜"	1"	½"	13/32"	5/16"	5¼"	2¾"	1¼"	⅜"
W10x22	2'-6"	6'-6"	1.18	6'-3"	2'-2½"	105'-0"	92	3'-0"	¾" x 3¾"	6"	2½"	1⅜"	3¼"	1⅜"	1"	½"	13/32"	5/16"	5¾"	2¾"	1½"	½"
W10x26	2'-6"	7'-0"	1.27	6'-9"	2'-2½"	112'-0"	98	3'-0"	⅞" x 4"	7"	2¾"	1½"	4"	1½"	1"	¾"	15/32"	⅜"	5¾"	2¾"	1½"	⅝"
W12x26	2'-6"	7'-9"	1.41	7'-6"	2'-2½"	119'-0"	107	3'-0"	⅞" x 4"	7"	2¾"	1½"	4"	1½"	1"	¾"	15/32"	⅜"	6½"	3½"	1½"	⅝"
W14x30	3'-0"	7'-3"	1.90	7'-0"	2'-8½"	145'-0"	113	3'-0"	⅞" x 4"	7"	2¾"	1½"	4"	1½"	1"	¾"	15/32"	⅜"	6¾"	3½"	1⅝"	½"
Ground Mounted Sign #3 → W14x38	3'-0"	8'-0"	2.09	7'-9"	2'-8½"	153'-0"	122	3'-6"	1" x 4½"	7½"	3"	1¾"	4"	1¾"	1¼"	¾"	17/32"	⅜"	6¾"	3½"	1⅝"	½"
Ground Mounted Sign #2 → W16x45	3'-0"	8'-6"	2.23	8'-3"	2'-8½"	162'-0"	130	3'-6"	1" x 4½"	7½"	3"	1¾"	4"	1¾"	1¼"	¾"	17/32"	⅜"	7"	3½"	1¾"	½"

*Dimensional changes required for varying site conditions shall be approved by the Engineer.

POST	FUSE PLATE BOLT SIZE — Sign Height																				
	4'-0"	5'-0"	6'-0"	7'-0"	8'-0"	9'-0"	10'-0"	11'-0"	12'-0"	13'-0"	14'-0"	15'-0"	16'-0"	17'-0"	18'-0"	19'-0"	20'-0"	21'-0"	22'-0"	23'-0"	24'-0"
W6x9	½" x 1½"	½" x 1½"	½" x 1½"	½" x 1½"	—	—	—	—	—	—	—	—	—	—	—	—	—	—	—	—	—
W6x15	½" x 1¾"	½" x 1¾"	½" x 1¾"	⅝" x 2"	⅝" x 2"	¾" x 2"	¾" x 2"	¾" x 2"	¾" x 2"	—	—	—	—	—	—	—	—	—	—	—	—
W8x18	½" x 1¾"	½" x 1¾"	½" x 1¾"	½" x 1¾"	⅝" x 2"	⅝" x 2"	¾" x 2"	¾" x 2"	¾" x 2"	¾" x 2"	—	—	—	—	—	—	—	—	—	—	—
W10x22	½" x 2"	½" x 2"	½" x 2"	½" x 2"	½" x 2"	⅝" x 2"	⅝" x 2"	¾" x 2¼"	¾" x 2¼"	¾" x 2¼"	¾" x 2¼"	¾" x 2¼"	¾" x 2¼"	—	—	—	—	—	—	—	—
W10x26	½" x 2"	½" x 2"	½" x 2"	½" x 2"	½" x 2"	⅝" x 2¼"	⅝" x 2¼"	¾" x 2½"	¾" x 2½"	¾" x 2½"	¾" x 2½"	¾" x 2½"	¾" x 2½"	¾" x 2½"	—	—	—	—	—	—	—
W12x26	½" x 2"	½" x 2"	½" x 2"	½" x 2"	½" x 2"	⅝" x 2¼"	⅝" x 2¼"	¾" x 2½"	¾" x 2½"	¾" x 2½"	¾" x 2½"	¾" x 2½"	¾" x 2½"	¾" x 2½"	¾" x 2½"	—	—	—	—	—	—
W14x30	½" x 2"	½" x 2"	½" x 2"	½" x 2"	½" x 2"	⅝" x 2"	⅝" x 2"	¾" x 2¼"	¾" x 2¼"	¾" x 2¼"	¾" x 2¼"	¾" x 2¼"	¾" x 2¼"	¾" x 2¼"	¾" x 2¼"	¾" x 2¼"	¾" x 2¼"	—	—	—	—
Ground Mounted Sign #3 → W14x38	½" x 2"	½" x 2"	½" x 2"	½" x 2"	½" x 2"	⅝" x 2¼"	⅝" x 2¼"	¾" x 2½"	¾" x 2½"	¾" x 2½"	¾" x 2½"	⅞" x 2½"	⅞" x 2½"	1" x 2¾"	1" x 2¾"	1" x 2¾"	1" x 2¾"	1" x 2¾"	1" x 2¾"	1" x 2¾"	1" x 2¾"
Ground Mounted Sign #2 → W16x45	—	½" x 2"	½" x 2"	½" x 2"	½" x 2"	½" x 2"	½" x 2"	⅝" x 2¼"	⅝" x 2¼"	⅝" x 2¼"	¾" x 2½"	¾" x 2½"	⅞" x 2½"	⅞" x 2½"	⅞" x 2½"	1" x 2¾"	1" x 2¾"	1" x 2¾"	1" x 2¾"	1" x 2¾"	1" x 2¾"

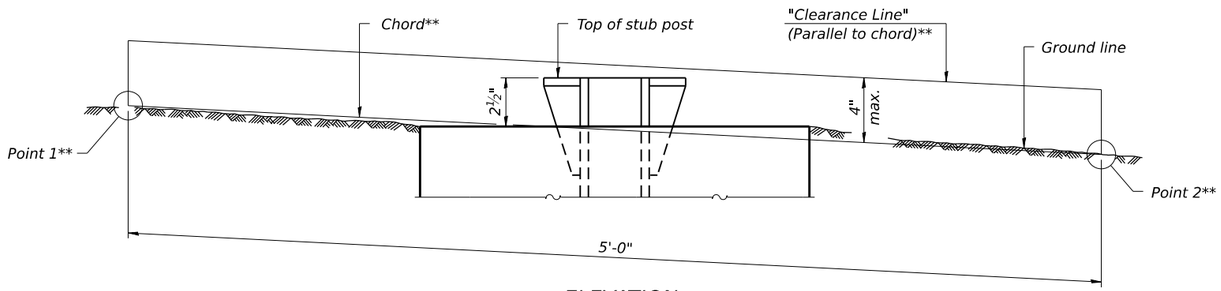

ELEVATION
GROUND LINE & STUB POST

** For all "Point 1" and "Point 2" locations, "Clearance Line" must be at or above top of stub post.

① Quantity includes all concrete necessary for one foundation.

② Includes reinforcement bars and spiral hooping for one foundation.

BAW-A-2 5-15-2023

(Sheet 2 of 2)

HBM ENGINEERING GROUP, LLC

USER NAME =	DESIGNED - JJS, AWD	REVISED -
	CHECKED - MI	REVISED -
PLOT SCALE =	DRAWN - AWD	REVISED -
PLOT DATE =	CHECKED -	REVISED -

STATE OF ILLINOIS
DEPARTMENT OF TRANSPORTATION

BREAK-AWAY WIDE FLANGE
STEEL SIGN POST TABLES

SHEET 2 OF 3 SHEETS

F.A.* RTE.	SECTION	COUNTY	TOTAL SHEETS	SHEET NO.
*	141-1HBR-3 & (9,10)R-3	OGLE	508	291
		CONTRACT NO. 64N98		
	ILLINOIS	FED. AID PROJECT		

*FAI ROUTE 39 (I-39) & FAP 567 (IL 38)

MODEL: Default
FILE NAME: P:\2001-818 PTB 194-021 (D2) IL 38 @ I-39 (CBBEL)\Sheet Files\Final Plans\Sign Structures\0171196-D9200120-SignDet10-HBM.dgn
2/18/2025 4:30:28 PM

Illinois Department of Transportation
Division of Highways
IDOT

SOIL BORING LOG

Page 1 of 1

Date 7/11/24

ROUTE FAI 39 & FAP 567 DESCRIPTION P92-016-09 - Overhead sign truss LOGGED BY W. Garza

SECTION 141-1HBR-3 & (9,10)R-3 LOCATION Dement, SE 1/4 & NE 1/4 20, SEC. , TWP. 40N, RNG. 2E

COUNTY Ogle DRILLING METHOD Hollow Stem Auger HAMMER TYPE CME-45 Automatic

STRUCT. NO.
Station

Latitude 41° 56' 05.04"
Longitude -89° 01' 35.81"
Northing 1,920,804.0558
Easting 2,606,772.8233

BORING NO. GMS 1
Station 658+46
Offset 72.00ft Lt
Ground Surface Elev. 817.60 ft

Surface Water Elev. ft
Stream Bed Elev. ft

Groundwater Elev.:
First Encounter ft
Upon Completion ft
After Hrs. ft

Description	Elev.	DEPTH (ft)	BLOWS (/6")	UCS Qu (tsf)	MOIST (%)
Agg shoulder	816.60				
DENSE tan DIRTY SANDY GRAVEL	814.10		13 16 22		5.0
DENSE tan SANDY GRAVEL	811.60	-5	21 23 21		5.1
DENSE tan MEDIUM SAND	809.10		14 18 20		11.5
DENSE tan/light gray MEDIUM SAND and GRAVEL	806.60	-10	9 13 22		9.6
MEDIUM tan DIRTY SANDY GRAVEL	803.60		17 13 10		8.3
STIFF gray CLAY LOAM with AGG	801.60	-15	2 6 9	1.2 B	21.4
End of Boring		-20			

Northing and Easting were calculated using the ILHP-WF coordinate system

The Unconfined Compressive Strength (UCS) Failure Mode is indicated by (B-Bulge, S-Shear, P-Penetrometer)
The SPT (N value) is the sum of the last two blow values in each sampling zone (AASHTO T206)

BBS, from 137 (Rev. 8-99)

Illinois Department of Transportation
Division of Highways
IDOT

SOIL BORING LOG

Page 1 of 1

Date 7/24/24

ROUTE FAI 39 & FAP 567 DESCRIPTION P92-016-09 - Overhead sign truss LOGGED BY W. Garza

SECTION 141-1HBR-3 & (9,10)R-3 LOCATION Dement, SE 1/4 & NE 1/4 20, SEC. , TWP. 40N, RNG. 2E

COUNTY Ogle DRILLING METHOD Hollow Stem Auger HAMMER TYPE CME-45 Automatic

STRUCT. NO.
Station

Latitude 41° 56' 03.86"
Longitude -89° 01' 18.11"
Northing 1,920,702.3695
Easting 2,608,112.5449

BORING NO. GMS 2
Station 672+46
Offset 72.00ft Rt
Ground Surface Elev. 814.80 ft

Surface Water Elev. ft
Stream Bed Elev. ft

Groundwater Elev.:
First Encounter ft
Upon Completion ft
After Hrs. ft

Description	Elev.	DEPTH (ft)	BLOWS (/6")	UCS Qu (tsf)	MOIST (%)
STIFF dark brown SILTY CLAY LOAM	813.30			1.1 P	18.5
MEDIUM tan SAND with MEDIUM GRAVEL	811.30		7 12 18		8.2
MEDIUM tan/gray SAND with SANDY LOAM LENS	808.30	-5	10 7 7		7.2
MEDIUM gray SILTY CLAY LOAM	806.30		2 5 8	0.9 P	21.3
STIFF gray SILTY CLAY LOAM	803.80	-10	6 6 8	1.7 B	17.8
STIFF gray SILTY CLAY LOAM	801.30		6 6 16	1.4 B	15.5
VERY STIFF gray CLAY LOAM	798.80	-15	6 7 11	2.1 B	21.6
End of Boring		-20			

Northing and Easting were calculated using the ILHP-WF coordinate system

The Unconfined Compressive Strength (UCS) Failure Mode is indicated by (B-Bulge, S-Shear, P-Penetrometer)
The SPT (N value) is the sum of the last two blow values in each sampling zone (AASHTO T206)

BBS, from 137 (Rev. 8-99)

MODEL: Default
FILE NAME: P:\2001-818 PTB 194-021 (D2) IL 38 @ I-39 (CBBEL)\Sheet Files\Final Plans\Sign Structures\0171196-D9200120-SignDet17-HBM.dgn
2/18/2025 4:56:58 PM

HBM ENGINEERING GROUP, LLC

USER NAME =	DESIGNED - JJS, AWD	REVISED -	
	CHECKED - MI	REVISED -	
PLOT SCALE =	DRAWN - AWD	REVISED -	
PLOT DATE =	CHECKED - MI	REVISED -	

STATE OF ILLINOIS
DEPARTMENT OF TRANSPORTATION

SOIL BORINGS (SHEET 1 OF 1)

SHEET 3 OF 3 SHEETS

F.A.* RTE.	SECTION	COUNTY	TOTAL SHEETS	SHEET NO.
*	141-1HBR-3 & (9,10)R-3	OGLE	508	292

CONTRACT NO. 64N98

ILLINOIS FED. AID PROJECT

*FAI ROUTE 39 (I-39) & FAP 567 (IL 38)

Benchmark: ASE 401 Set cut X on light pole foundation south of Wendy's Parking Lot. Elev. 792.25

Existing Structure: The existing structure (S.N. 071-1196) was originally constructed in 1978 as part of Project FFD-412-5(9) and is a cast-in-place, reinforced concrete double-cell box culvert located in Ogle County, Illinois. The culvert consists of two 8'-0" W x 4'-0" H cells with 15"-deep headwalls and 8" thick horizontal cantilever wingwalls at all four corners. The interior wall and sidewall thicknesses measure 6" and the culvert has an out-to-out width of 17'-6". The overall length of the existing culvert is ±236'-1" (Out-to-Out Headwalls) and is divided into a ±43'-3"-long end section, a 148'-6"-long center section, and a ±44'-4"-long end section. The top and bottom slab thicknesses of the end sections measure 9" and 10", respectively, while the center section top slab and bottom slab thicknesses measure 11½" and 12½", respectively. The culvert is oriented in the north-south direction with no skew, a 0.297% slope, and a maximum fill height of approximately 18'-0". The existing end sections will be removed and the culvert will be extended to meet the new roadway geometry.

Salvage: No Salvage.
Traffic will be maintained utilizing staged construction.
Precast alternate is not allowed.

STATE OF ILLINOIS — MOUSSA A. ISSA 081-005738 CHICAGO, ILLINOIS — LICENSED STRUCTURAL ENGINEER

Signed Moussa A. Issa
Dr. Moussa A. Issa, S.E. IL. Lic. No. 081-005738
Expires 11-30-2026

Date 2/17/2025 For Sheets S1-01 Thru S1-13.

APPROVED
For Structural Adequacy Only
Engineer of Bridges & Structures

WATERWAY INFORMATION

Drainage Area = 1.37 Sq. Mi.
Exist. Overtopping Elev. = 814.90 at Sta. 655+50.00
Prop. Overtopping Elev. = 814.88 at Sta. 655+87.15

Flood	Freq. Yr.	Q C.F.S.	Opening (Ft²) Exist.	Opening (Ft²) Prop.	Nat. H.W.E.	Head - Ft Exist.	Head - Ft Prop.	Headwater El. Exist.	Headwater El. Prop.
	10	148.95	64	64	797.5	0.1	0.1	797.6	797.6
Design	50	221.11	64	64	797.7	0.3	0.3	798.0	798.0
Base	100	254.82	64	64	797.8	0.4	0.4	798.2	798.2
Overtopping Exist.	>500	-	-	-	-	-	-	-	-
Overtopping Prop.	>500	-	-	-	-	-	-	-	-
Max. Calc.	500	326.67	64	64	797.9	0.7	0.6	798.5	798.5

Existing 10-year outlet Velocity = 1.99 ft/s
Proposed 10-year outlet Velocity = 1.05 ft/s
2-year Flow Rate = 71 ft³/s

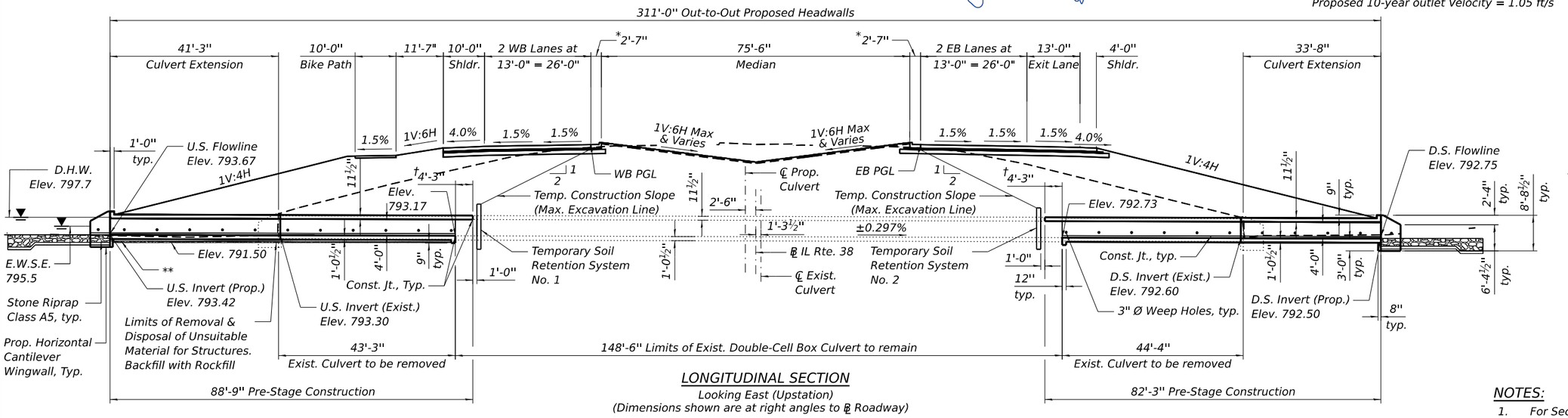

LONGITUDINAL SECTION

Looking East (Upstation)
(Dimensions shown are at right angles to ℄ Roadway)

DESIGN STRESSES

FIELD UNITS

f'c = 3,500 psi
fy = 60,000 psi (Reinforcement)

FIELD UNITS (EXIST. CONSTRUCTION)

fc = 1,400 psi (Barrel)
fc = 1,200 psi (Wings)
fs = 20,000 psi (Reinforcement)

DESIGN SPECIFICATIONS

2002 AASHTO Standard Specifications for Highway Bridges, 17th Edition

LOADING HS20-44

Allow 25 lb/sq. ft. for future wearing surface.

NOTES:

1. For Section A-A, PGLs & Curve Data, see Sheet S1-02 of S1-13 .

LEGEND

Soil Boring
Temporary Soil Retention System (TSRS)

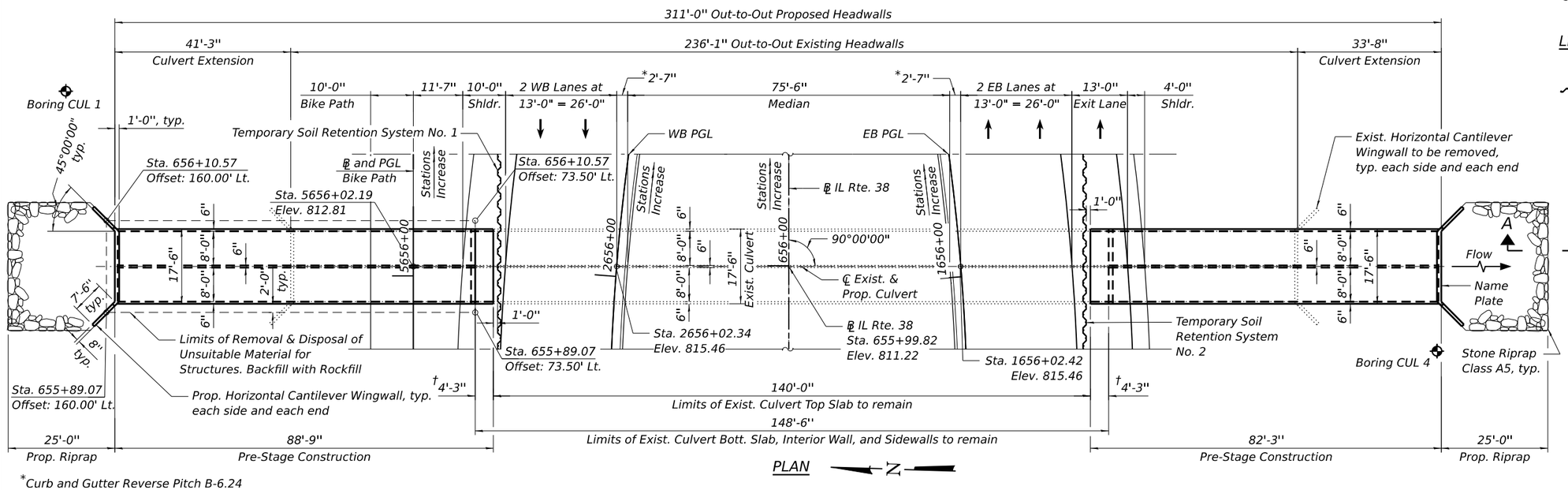

PLAN

*Curb and Gutter Reverse Pitch B-6.24
**Porous Granular Material, CA-7, 6"
†Additional length of culvert top slab to be removed

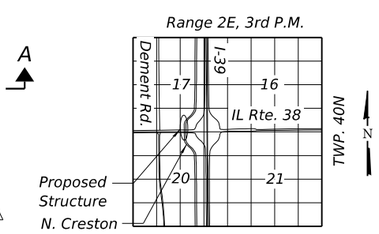

LOCATION SKETCH

GENERAL PLAN & ELEVATION
IL RTE. 38 OVER N. CRESTON DITCH
F.A.P. RTE. 0567 (IL RTE. 38)
SECTION 141-1HBR-3 & (9,10)R-3
OGLE COUNTY
STATION 655+99.82
STRUCTURE NO. 071-1196

HBM ENGINEERING GROUP, LLC

USER NAME =	DESIGNED - JJS, IAL	REVISED -
	CHECKED - MI	REVISED -
PLOT SCALE =	DRAWN - EN, AWD	REVISED -
PLOT DATE =	CHECKED - MI	REVISED -

STATE OF ILLINOIS
DEPARTMENT OF TRANSPORTATION

SHEET S1-01 OF S1-13 SHEETS

F.A.* RTE.	SECTION	COUNTY	TOTAL SHEETS	SHEET NO.
*	141-1HBR-3 & (9,10)R-3	OGLE	508	293
		CONTRACT NO. 64N98		

ILLINOIS FED. AID PROJECT
*FAI ROUTE 39 (I-39) & FAP 567 (IL 38)

MODEL: Default
FILE NAME: P:\2001-818 PTB 194-021 (D2) IL 38 @ I-39 (CBBELI)\Sheet Files\Final Plans\0171196-D9200120-S01-General Plan & Elevation.dgn
2/17/2025 11:46:02 AM

GENERAL NOTES:

1. Layout of the slope protection system may be varied to suit ground conditions in the field as directed by the Engineer.

2. The limits and quantities of removal and replacement shown are based on the boring data and may be modified by the District Geotechnical and Field Engineers for variable subsurface conditions encountered in the field.

3. The Rockfill shall be capped with 6 in. of CA7 and satisfy the Standard Specifications unless otherwise indicated in the Special Provisions. The cost of the capping material shall be included in the pay item for Rockfill.

4. Precast alternate is not allowed.

5. A cantilevered sheet piling design does not appear feasible and additional members or other retention systems may be necessary. The Contractor shall submit a temporary soil retention system design including plan details and calculations for review and acceptance by the Engineer.

INDEX OF SHEETS

SCOPE OF WORK:

1. Remove existing north and south end sections of culvert, and existing horizontal cantilever wingwalls, after installing TSRS.

2. Remove unsuitable material for structures in areas of north culvert extension and replace with Rockfill.

3. Construct north and south culvert extensions, construct horizontal cantilever wingwalls, and place riprap aprons.

4. Clean existing sediment/debris in each culvert cell.

5. Perform structural repair of concrete and epoxy crack injection to the portions of existing culvert to remain.

6. Construct embankment and proposed roadway pavement.

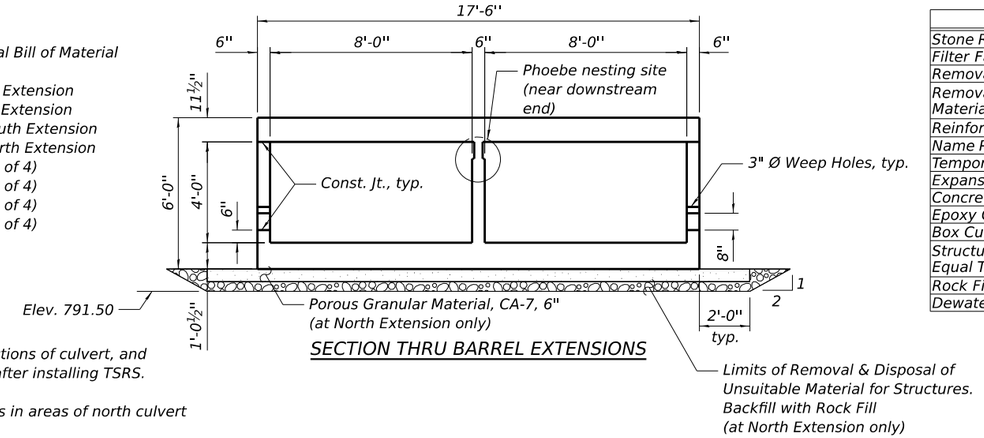

SECTION THRU BARREL EXTENSIONS

TOTAL BILL OF MATERIAL

ITEM	UNIT	TOTAL
Stone Riprap, Class A5	Sq Yd	158
Filter Fabric	Sq Yd	158
Removal Of Existing Structures No. 1	Each	1
Removal And Disposal Of Unsuitable Material For Structures	Cu Yd	61
Reinforcement Bars	Pound	79,350
Name Plates	Each	1
Temporary Soil Retention System	Sq Ft	449
Expansion Bolts 3/4 Inch	Each	58
Concrete Box Culverts	Cu Yd	260.7
Epoxy Crack Injection	Foot	92
Box Culverts To Be Cleaned	Foot	297
Structural Repair Of Concrete (Depth Equal To Or Less Than 5 Inches)	Sq Ft	1
Rock Fill	Ton	143
Dewatering	L Sum	1

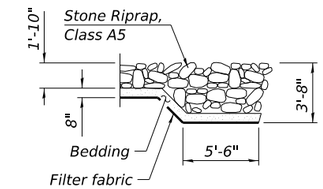

SECTION A-A

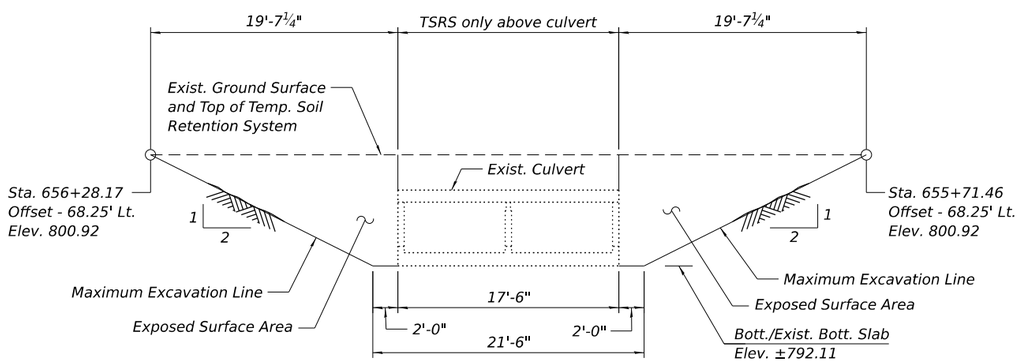

TEMPORARY SOIL RETENTION SYSTEM NO. 1

(Looking South)

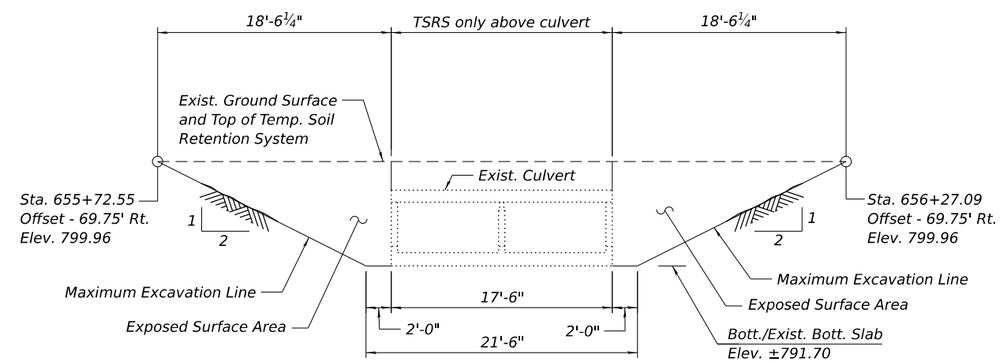

TEMPORARY SOIL RETENTION SYSTEM NO. 2

(Looking North)

STA. 655+99.82
RE-BUILT 20__ BY
STATE OF ILLINOIS
F.A.P. Rte. 0567 (IL Rte. 38)
Sec. 141-1HBR-3 & (9,10)R-3
LOADING HS20-44
STR. NO. 071-1196

NAME PLATE
See Std. 515001

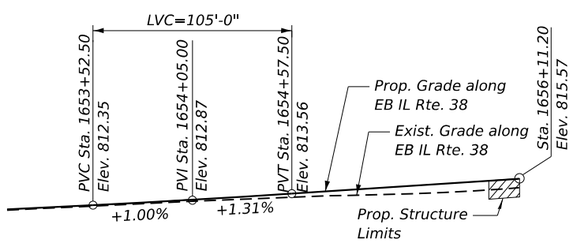

PROFILE GRADE

(Along EB IL Rte. 38, Inside Edge of Pav't)

CURVE DATA - EB IL RTE. 38

(PR CURVE 2)

P.I. Sta. = 1655+92.49
Δ= 34°02'02" (LT)
D = 11°14'04"
R = 510.00'
T = 156.09'
L = 302.94'
E = 23.35'
P.C. Sta. = 1654+36.41
P.T. Sta. = 1657+39.35

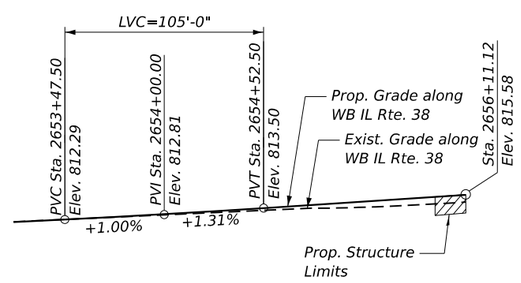

PROFILE GRADE

(Along WB IL Rte. 38, Inside Edge of Pav't)

CURVE DATA - WB IL RTE. 38

(PR CURVE 9)

P.I. Sta. = 2655+93.00
Δ= 33°53'22" (RT)
D = 11°14'04"
R = 510.00'
T = 155.38'
L = 301.66'
E = 23.15'
P.C. Sta. = 2654+37.62
P.T. Sta. = 2657+39.27

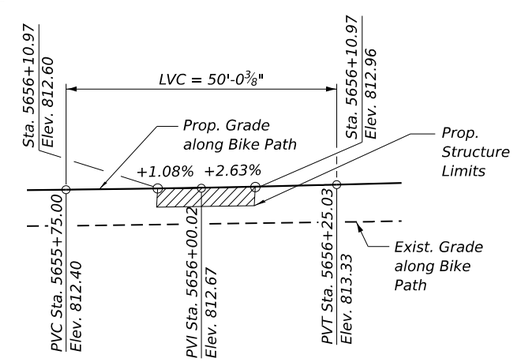

PROFILE GRADE

(Along Bike Path, Inside Edge of Pav't)

MODEL: Default
FILE NAME: P:\2001-818 PTB 194-021 (D2) IL 38 @ I-39 (CBBEL)\Sheet Files\Final Plans\0171196-D9200120-S02-General Notes.dgn

2/17/2025 11:46:27 AM

HBM ENGINEERING GROUP, LLC

USER NAME =	DESIGNED - JJS, IAL	REVISED -
	CHECKED - MI	REVISED -
PLOT SCALE =	DRAWN - EN, AWD	REVISED -
PLOT DATE =	CHECKED - MI	REVISED -

STATE OF ILLINOIS
DEPARTMENT OF TRANSPORTATION

GENERAL NOTES, INDEX OF SHEETS & TOTAL BILL OF MATERIAL
STRUCTURE NUMBER 071-1196

SHEET S1-02 OF S1-13 SHEETS

F.A.* RTE.	SECTION	COUNTY	TOTAL SHEETS	SHEET NO.
*	141-1HBR-3 & (9,10)R-3	OGLE	508	294
		CONTRACT NO. 64N98		
	ILLINOIS	FED. AID PROJECT		

*FAI ROUTE 39 (I-39) & FAP 567 (IL 38)

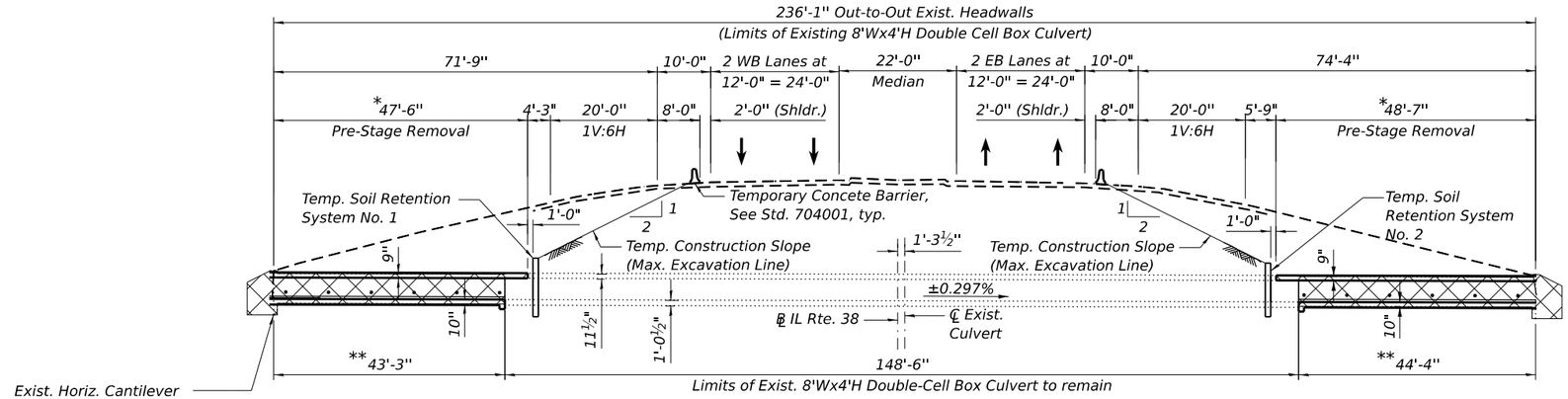

PRE-STAGE REMOVAL
(Looking East)
(Dimensions shown are at right angles to ℄ Roadway)

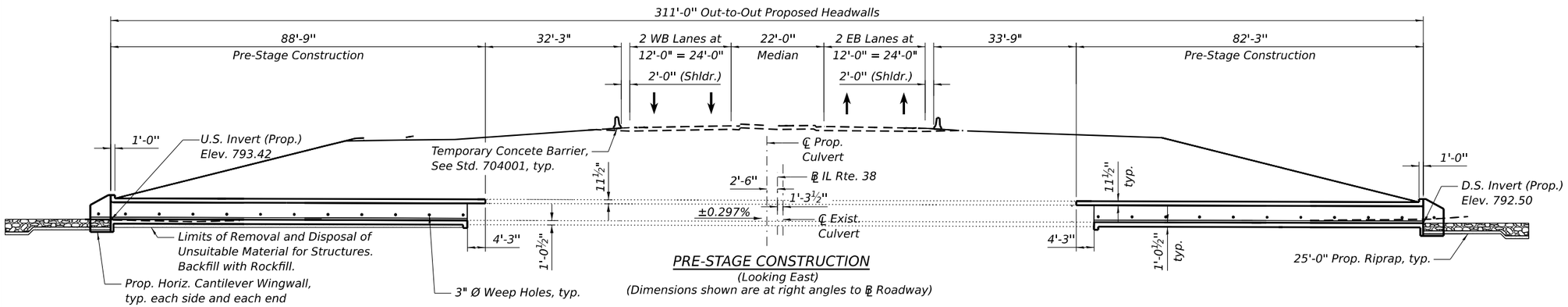

PRE-STAGE CONSTRUCTION
(Looking East)
(Dimensions shown are at right angles to ℄ Roadway)

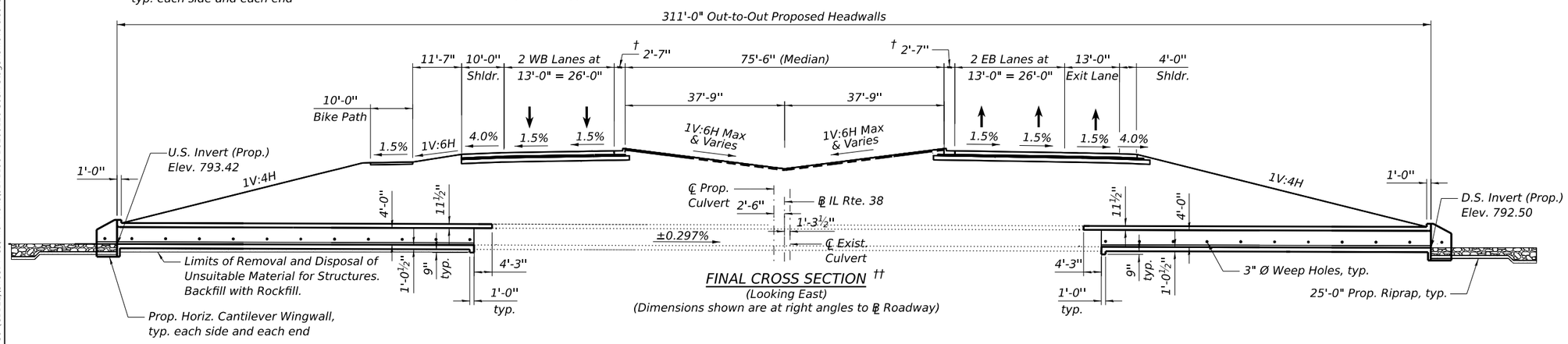

FINAL CROSS SECTION ††
(Looking East)
(Dimensions shown are at right angles to ℄ Roadway)

PRE-STAGE REMOVAL

1. Install temporary concrete barriers as shown to protect pre-stage removal and construction work areas on north and south sides of existing roadway.
2. Excavate to the temporary construction slope at both ends.
3. Install Temporary Soil Retention System Nos. 1 and 2 at the locations indicated on the Plans.
4. Excavate to bottom of bottom slab in areas of culvert partial removal.
5. Remove existing north and south end sections of culvert, additional lengths of north and south top slabs, and existing horizontal cantilever wingwalls.
6. Remove and Dispose of Unsuitable Materials for Structures at the north culvert extension to the limits indicated on the Plans.

PRE-STAGE CONSTRUCTION

1. Backfill area where unsuitable material for structures was removed (at the north culvert extension) with Rock Fill and cap with Porous Granular Material, CA-7, 6", as indicated on the Plans.
2. Construct north and south culvert extensions, headwalls and horizontal cantilever wingwalls.
3. Place Class A5 riprap apron at upstream and downstream ends of culvert as shown on the Plans.
4. Backfill to proposed final grade elevations above culvert extensions.
5. Proceed with proposed roadway construction. See Roadway Plans.

* Limits of top slab removal

** Limits of 10"-thick bottom slab, interior wall and sidewall (to be removed)

† Curb and Gutter (Reverse Pitch B-6.24)

†† For proposed pavement construction sequence, see Roadway Plans

LEGEND

Removal of Existing Structures No. 1

NOTE:

1. For maintenance of Traffic after Pre-Stage Construction, see Roadway Plans.

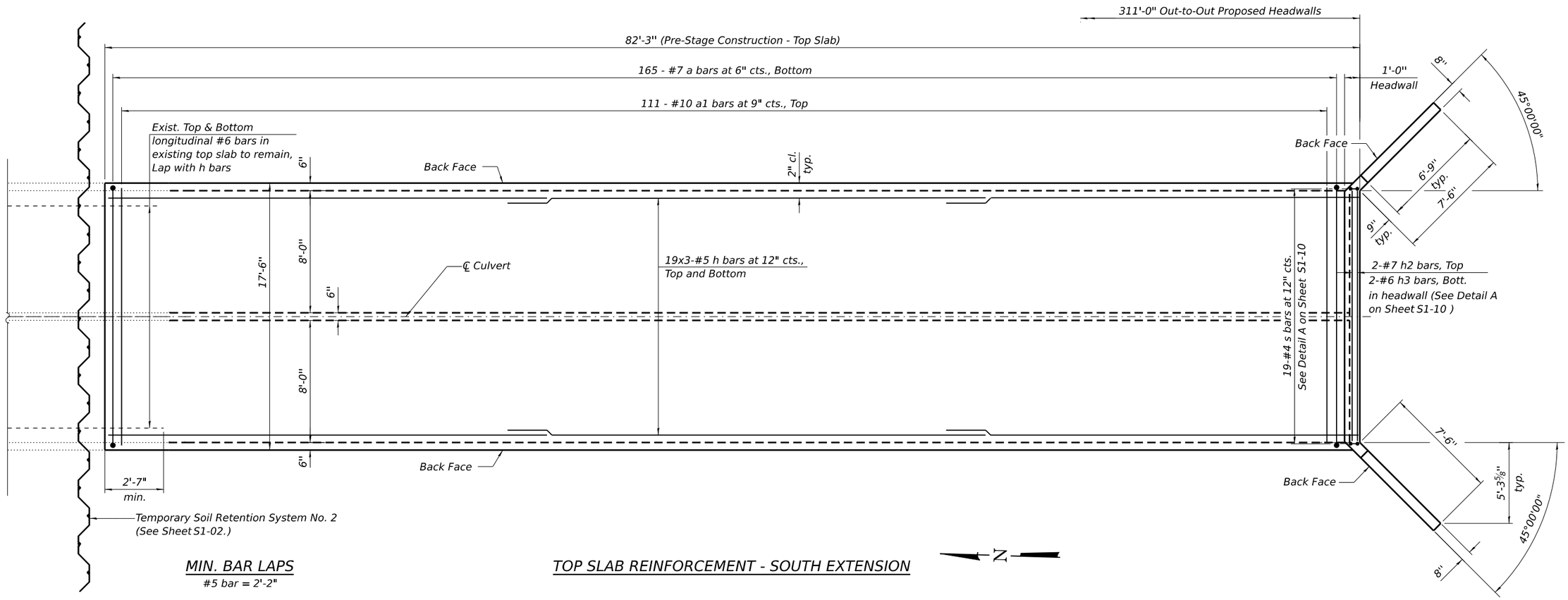

MIN. BAR LAPS

#5 bar = 2'-2"

TOP SLAB REINFORCEMENT - SOUTH EXTENSION

NOTES:

1. Bars indicated thus, 19x3-#6 etc., indicates 19 lines of bars with 3 lengths per line.
2. For Section thru Barrel, and Detail A, see Sheet S1-10.
3. For Bottom Slab reinforcement in South Extension, see Sheet S1-06.
4. For culvert longitudinal sections thru extensions, see Sheet S1-08.
5. For bar diagrams and Bill of Material, see Sheet S1-11.
6. A distance of half the length of the wingwall, but not less than six feet of the barrel, shall be poured monolithically with the wingwalls.

MODEL: Default
FILE NAME: P:\2001-818 PTB 194-021 (D2) IL 38 @ I-39 (CBBEL)\Sheet Files\Final Plans\0171196-D9200120-S03-CulvertTopSlabDetails_Stage 1.dgn
2/17/2025 11:46:59 AM

HBM ENGINEERING GROUP, LLC

USER NAME =	DESIGNED - JJS, IAL	REVISED -	
	CHECKED - MI	REVISED -	
PLOT SCALE =	DRAWN - EN, AWD	REVISED -	
PLOT DATE =	CHECKED - MI	REVISED -	

STATE OF ILLINOIS
DEPARTMENT OF TRANSPORTATION

CULVERT PLAN TOP SLAB DETAILS - SOUTH EXTENSION
STRUCTURE NUMBER 071-1196

SHEET S1-04 OF S1-13 SHEETS

F.A.* RTE.	SECTION	COUNTY	TOTAL SHEETS	SHEET NO.
*	141-1HBR-3 & (9,10)R-3	OGLE	508	296
		CONTRACT NO. 64N98		
	ILLINOIS	FED. AID PROJECT		

*FAI ROUTE 39 (I-39) & FAP 567 (IL 38)

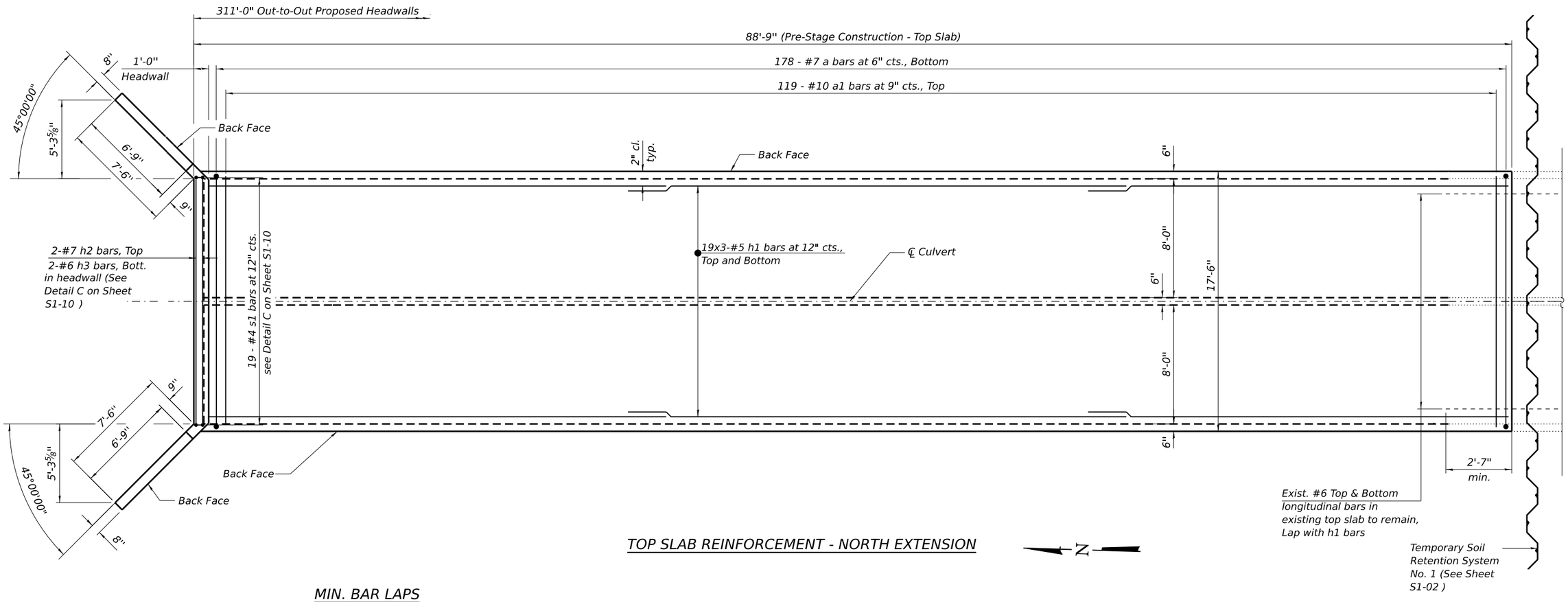

TOP SLAB REINFORCEMENT - NORTH EXTENSION

MIN. BAR LAPS

#5 bar = 2'-2"

NOTES:

1. For Bottom Slab reinforcement in North Extension, see Sheet S1-07.

2. For additional notes, see Sheet S1-04.

MODEL: Default
FILE NAME: P:\2001-818 PTB 194-021 (D2) IL 38 @ I-39 (CBBEL)\Sheet Files\Final Plans\0171196-D9200120-S04-CulvertTopSlabDetails_Stage II.dgn

2/17/2025 11:47:06 AM

HBM ENGINEERING GROUP, LLC

USER NAME =	DESIGNED - JJS, IAL	REVISED -	
	CHECKED - MI	REVISED -	
PLOT SCALE =	DRAWN - EN, AWD	REVISED -	
PLOT DATE =	CHECKED - MI	REVISED -	

STATE OF ILLINOIS
DEPARTMENT OF TRANSPORTATION

CULVERT PLAN TOP SLAB DETAILS - NORTH EXTENSION
STRUCTURE NUMBER 071-1196

SHEET S1-05 OF S1-13 SHEETS

F.A.* RTE.	SECTION	COUNTY	TOTAL SHEETS	SHEET NO.
*	141-1HBR-3 & (9,10)R-3	OGLE	508	297
		CONTRACT NO. 64N98		
	ILLINOIS	FED. AID PROJECT		

*FAI ROUTE 39 (I-39) & FAP 567 (IL 38)

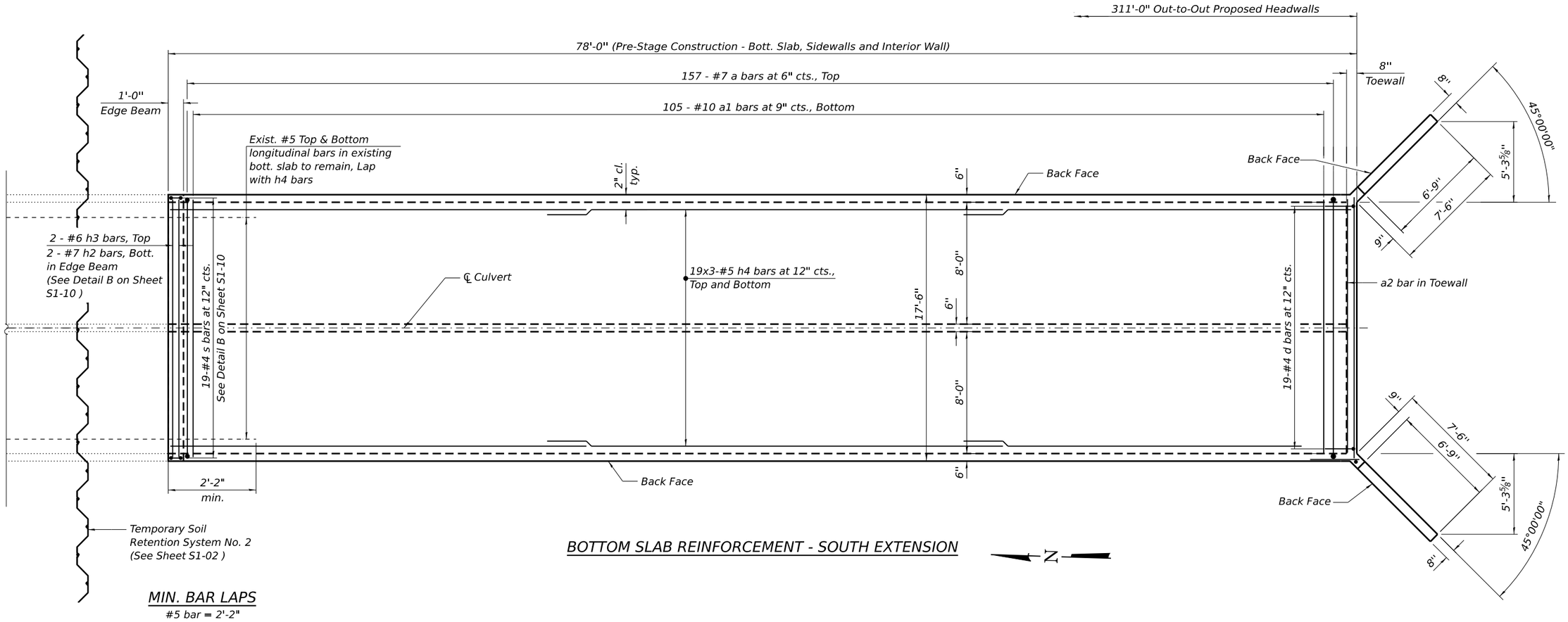

BOTTOM SLAB REINFORCEMENT - SOUTH EXTENSION

MIN. BAR LAPS

#5 bar = 2'-2"

NOTES:

1. For Top Slab reinforcement in South Extension and additional notes, see Sheet S1-04.

HBM ENGINEERING GROUP, LLC	USER NAME =	DESIGNED - JJS, IAL	REVISED -	STATE OF ILLINOIS DEPARTMENT OF TRANSPORTATION	CULVERT PLAN BOTTOM SLAB DETAILS - SOUTH EXTENSION STRUCTURE NUMBER 071-1196	F.A.* RTE.	SECTION	COUNTY	TOTAL SHEETS	SHEET NO.
		CHECKED - MI	REVISED -			*	141-1HBR-3 & (9,10)R-3	OGLE	508	298
	PLOT SCALE =	DRAWN - EN, AWD	REVISED -					CONTRACT NO. 64N98		
	PLOT DATE =	CHECKED - MI	REVISED -		SHEET S1-06 OF S1-13 SHEETS		ILLINOIS	FED. AID PROJECT		

*FAI ROUTE 39 (I-39) & FAP 567 (IL 38)

MODEL: Default
FILE NAME: P:\2001-818 PTB 194-021 (D2) IL 38 @ I-39 (CBBEL)\Sheet Files\Final Plans\0171196-D9200120-S05-CulvertBottSlabDetails_Stage 1.dgn
2/17/2025 11:47:13 AM

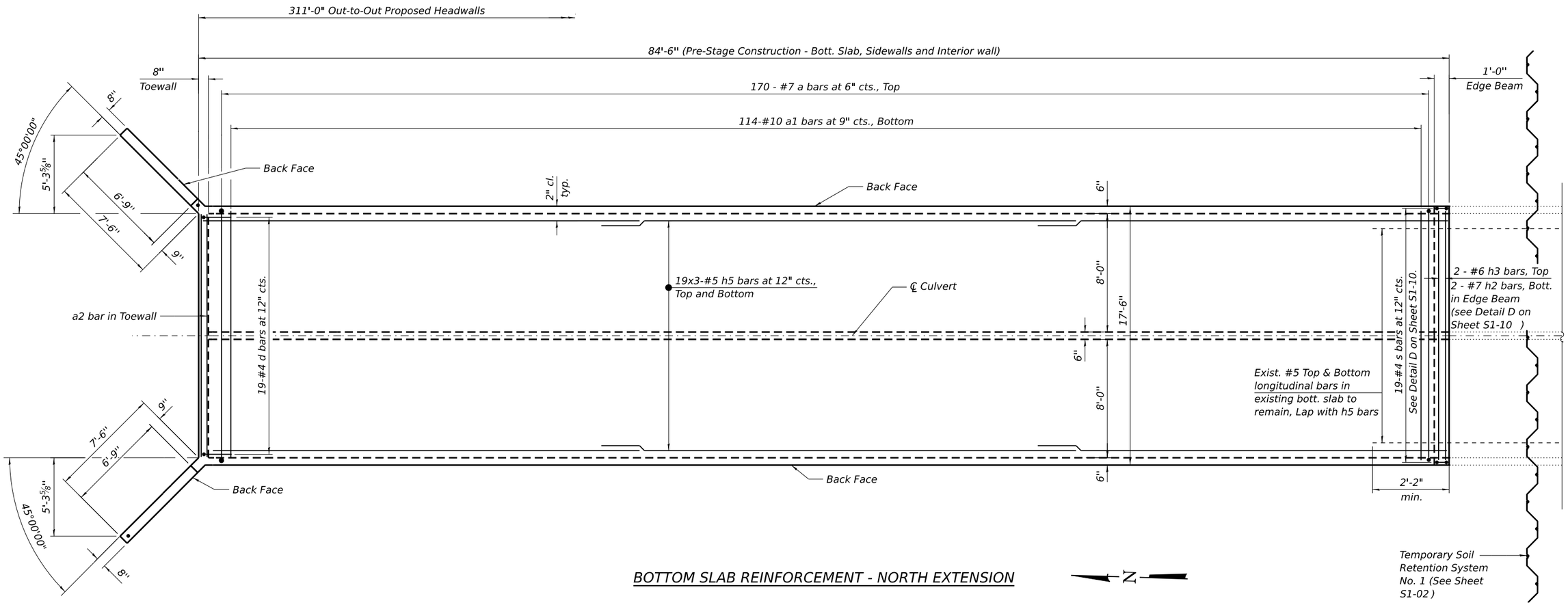

BOTTOM SLAB REINFORCEMENT - NORTH EXTENSION

N

MIN. BAR LAPS

#5 bar = 2'-2"

NOTES:

1. For Top Slab reinforcement in North Extension, see Sheet S1-05.

2. For additional notes, see Sheet S1-04.

MODEL: Default
FILE NAME: P:\2001-818 PTB 194-021 (D2) IL 38 @ I-39 (CBBEL)\Sheet Files\Final Plans\0171196-D9200120-S06-CulvertBottSlabDetails_Stage IL.dgn
2/17/2025 11:47:20 AM

HBM ENGINEERING GROUP, LLC

USER NAME =	DESIGNED - JJS, IAL	REVISED -	
	CHECKED - MI	REVISED -	
PLOT SCALE =	DRAWN - EN, AWD	REVISED -	
PLOT DATE =	CHECKED - MI	REVISED -	

STATE OF ILLINOIS
DEPARTMENT OF TRANSPORTATION

CULVERT PLAN BOTTOM SLAB DETAILS - NORTH EXTENSION
STRUCTURE NUMBER 071-1196

SHEET S1-07 OF S1-13 SHEETS

F.A.* RTE.	SECTION	COUNTY	TOTAL SHEETS	SHEET NO.
*	141-1HBR-3 & (9,10)R-3	OGLE	508	299
		CONTRACT NO. 64N98		
	ILLINOIS	FED. AID PROJECT		

*FAI ROUTE 39 (I-39) & FAP 567 (IL 38)

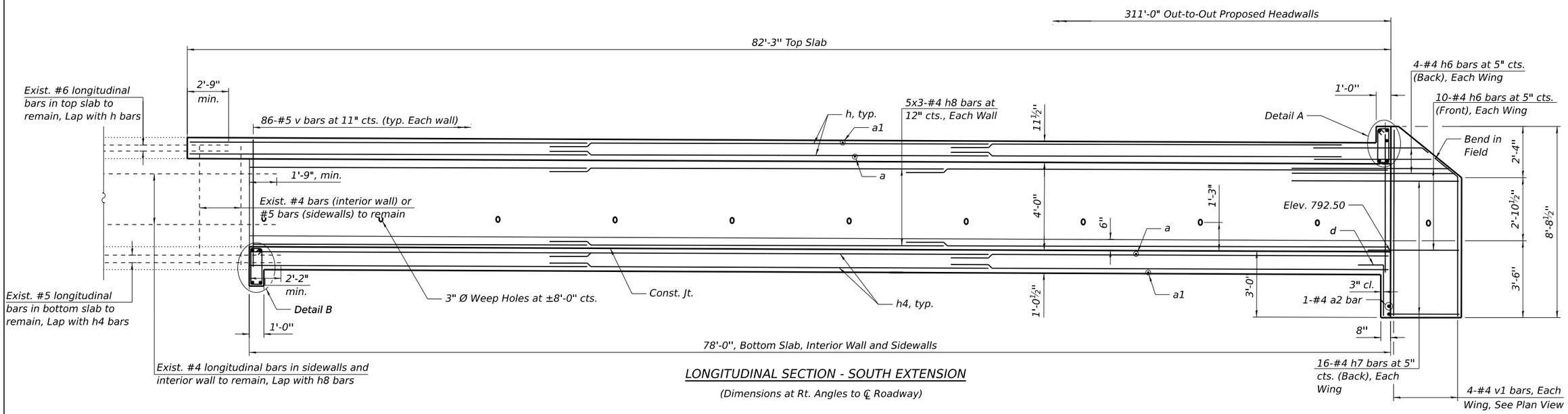

LONGITUDINAL SECTION - SOUTH EXTENSION

(Dimensions at Rt. Angles to ℄ Roadway)

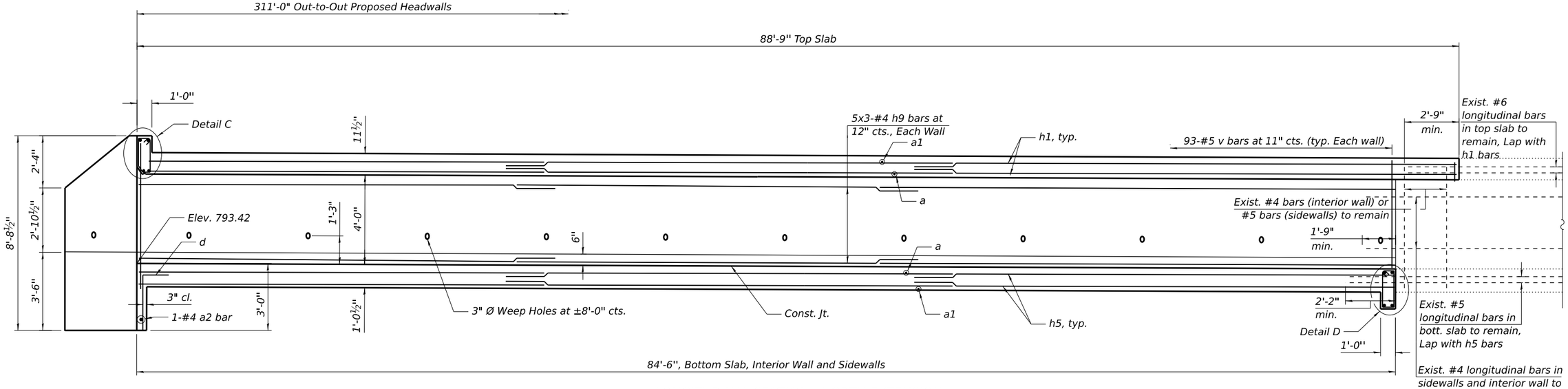

LONGITUDINAL SECTION - NORTH EXTENSION

(Dimensions at Rt. Angles to ℄ Roadway)

NOTES:

1. For Additional Notes, see Sheet S1-04.
2. For Details A thru D and Wingwall Plan View, see Sheet S1-10.
3. For bar diagrams and Bill of Material, see Sheet S1-11.

MIN. BAR LAPS

#4 bar = 1'-9"

MODEL: Default
FILE NAME: P:\2001-818 PTB 194-021 (D2) IL 38 @ I-39 (CBBEL)\Sheet Files\Final Plans\0171196-D9200120-S07-Sec&Dets1.dgn

HBM ENGINEERING GROUP, LLC

USER NAME =	DESIGNED - JJS, IAL	REVISED -	
	CHECKED - MI	REVISED -	
PLOT SCALE =	DRAWN - EN, AWD	REVISED -	
PLOT DATE =	CHECKED - MI	REVISED -	

STATE OF ILLINOIS
DEPARTMENT OF TRANSPORTATION

CULVERT SECTIONS AND DETAILS (SHEET 1 OF 4)
STRUCTURE NUMBER 071-1196

SHEET S1-08 OF S1-13 SHEETS

F.A.* RTE.	SECTION	COUNTY	TOTAL SHEETS	SHEET NO.
*	141-1HBR-3 & (9,10)R-3	OGLE	508	300
		CONTRACT NO. 64N98		
	ILLINOIS	FED. AID PROJECT		

*FAI ROUTE 39 (I-39) & FAP 567 (IL 38)

2/17/2025 11:47:24 AM