04-25-2025 LETTING ITEM 057

F.A. * RTE.	SECTION	COUNTY	TOTAL SHEETS	SHEET NO.
*	141-1HBR-3 & (9, 10) R-3	OGLE	508	1
	ILLINOIS	CONTRACT NO. 64N98		

*FAI ROUTE 39 (I-39) & FAP 567 (IL 38)

STATE OF ILLINOIS
DEPARTMENT OF TRANSPORTATION

PROPOSED
HIGHWAY PLANS

FAI ROUTE 39 (I-39) & FAP 567 (IL 38)
SECTION 141-1HBR-3 & (9,10) R-3
PROJECT CR-D3P0(364)
INTERCHANGE RECONSTRUCTION
OGLE COUNTY
C-92-042-23

D-92-001-20

LOCATION OF SECTION INDICATED THUS: -

FOR INDEX OF SHEETS, SEE SHEET NO. 2
FOR LIST OF HIGHWAY STANDARDS, SEE SHEET NO. 3

DESIGN DESIGNATION

IL 38: 1,565 (45) OTHER PRINCIPAL ARTERIAL 5.02 (JPC-20)
DESIGN SPEED: 35 MPH POSTED SPEED: 35 MPH
PV: 61% MU: 25% SU: 14%

DDI CROSSOVER
DESIGN SPEED: 35MPH POSTED SPEED: 35MPH

TOWNSHIP: DEMENT
T 40N R 2E
SECTIONS: 16, 17, 20, AND 21

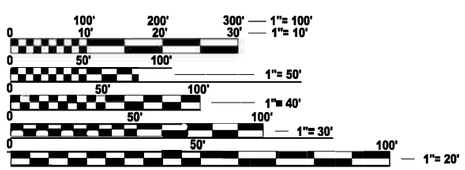

FULL SIZE PLANS HAVE BEEN PREPARED USING STANDARD ENGINEERING SCALES. REDUCED SIZED PLANS WILL NOT CONFORM TO STANDARD SCALES. IN MAKING MEASUREMENTS ON REDUCED PLANS, THE ABOVE SCALES MAY BE USED.

J.U.L.I.E.
JOINT UTILITY LOCATION INFORMATION FOR EXCAVATION
1-800-892-0123
OR 811

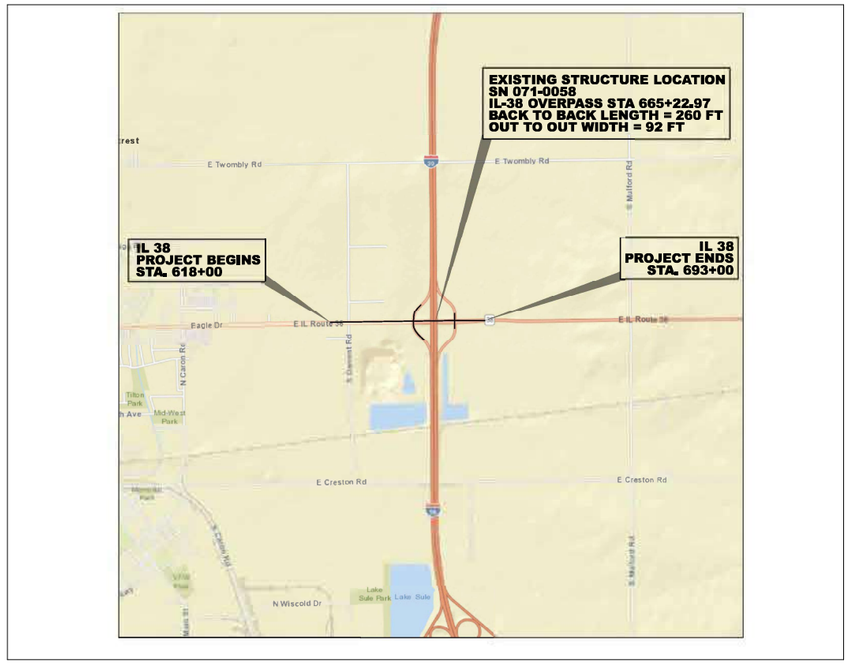

GROSS LENGTH = 4,454.26 FT. = 0.8436 MILE
NET LENGTH = 4,454.26 FT. = 0.8436 MILE

STATE OF ILLINOIS
DEPARTMENT OF TRANSPORTATION

SUBMITTED Feb 5 20 25
REGIONAL ENGINEER
March 21 20 25
ENGINEER OF DESIGN AND ENVIRONMENT
March 21 20 25
DIRECTOR OF HIGHWAYS, PROJECT IMPLEMENTATION

PROJECT ENGINEER: MICHAEL KUEHN
Michael.Kuehn@illinois.gov
Office: (815) 284-5351

CONTRACT NO. 64N98

CHRISTOPHER B. BURKE ENGINEERING, LTD.
9575 W. Higgins Road, Suite 600
Rosemont, Illinois 60018
(847) 823-0500

PRINTED BY THE AUTHORITY OF THE STATE OF ILLINOIS

REV. 2/21/25

STEPHEN N. SUGG
062-044117
REGISTERED
PROFESSIONAL
ENGINEER
OF
ILLINOIS

DATE: 02/20/2025

STEPHEN N. SUGG

CHRISTOPHER B. BURKE ENGINEERING, LTD.
ILLINOIS REGISTRATION No. 062–044117
EXPIRATION DATE: 11–30–2025
SHEETS: 1-34, 46-97, 101-193, 433-508

MOUSSA A. ISSA
081-005738
LICENSED
STRUCTURAL
ENGINEER
STATE OF ILLINOIS

DATE: 02/20/2025

DR. MOUSSA A. ISSA

HBM ENGINEERING GROUP, LLC
ILLINOIS REGISTRATION No. 081–005738
EXPIRATION DATE: 11–30–2026
SHEETS: 276-305

MAJID MOBASSERI
081-005058
LICENSED
STRUCTURAL
ENGINEER
STATE OF ILLINOIS

DATE: 02/20/2025

MAJID MOBASSERI

CHRISTOPHER B. BURKE ENGINEERING, LTD.
ILLINOIS REGISTRATION No. 081–005058
EXPIRATION DATE: 11–30–2026
SHEETS: 98-100, 306-334

ALI M. ISSA
062-074299
REGISTERED
PROFESSIONAL
ENGINEER
OF
ILLINOIS

DATE: 02/20/2025

ALI M. ISSA

HBM ENGINEERING GROUP, LLC
ILLINOIS REGISTRATION No. 062–074299
EXPIRATION DATE: 11–30–2025
SHEETS: 35-45, 199-275

ELIZABETH A. JENSEN
062-067808
REGISTERED
PROFESSIONAL
ENGINEER
OF
ILLINOIS

DATE: 02/20/2025

ELIZABETH A. JENSEN

CHRISTOPHER B. BURKE ENGINEERING, LTD.
ILLINOIS REGISTRATION No. 062–067808
EXPIRATION DATE: 11–30–2025
SHEETS: 335-398

ANTHONY J. DERICCO
062-057484
REGISTERED
PROFESSIONAL
ENGINEER
OF
ILLINOIS

DATE: 02/20/2025

ANTHONY J. DERICCO

CHRISTOPHER B. BURKE ENGINEERING, LTD.
ILLINOIS REGISTRATION No. 062–057484
EXPIRATION DATE: 11–30–2025
SHEETS: 399-432

INDEX OF SHEETS

HIGHWAY STANDARDS

000001-08	STANDARD SYMBOLS, ABBREVIATIONS, AND PATTERNS
001001-02	AREAS OF REINFORCEMENT BARS
001006	DECIMAL OF AN INCH AND OF A FOOT
280001-07	TEMPORARY EROSION CONTROL SYSTEMS
420001-10	PAVEMENT JOINTS
420101-07	24' (7.2 m) JOINTED PCC PAVEMENT
420106-07	36' (10.8 m) JOINTED PCC PAVEMENT
420111-04	PCC PAVEMENT ROUNDOUTS
420401-13	PAVEMENT CONNECTOR (PCC) FOR BRIDGE APPROACH SLAB
420701-03	PAVEMENT WELDED WIRE REINFORCEMENT
424001-12	PERPENDICULAR CURB RAMPS FOR SIDEWALKS
424006-06	DIAGONAL CURB RAMPS FOR SIDEWALKS
424011-05	CORNER PARALLEL CURB RAMPS FOR SIDEWALKS
424021-07	DEPRESSED CORNER FOR SIDEWALKS
424031-03	MEDIAN PEDESTRIAN CROSSINGS
442101-09	CLASS B PATCHES
442201-03	CLASS C AND D PATCHES
483001-06	PCC SHOULDER
515001-04	NAME PLATE FOR BRIDGES
542301-03	PRECAST REINFORCED CONCRETE FLARED END SECTION
542306-03	PRECAST REINFORCED CONCRETE ELLIPTICAL FLARED END SECTION
601001-05	PIPE UNDERDRAINS
601101-02	CONCRETE HEADWALL FOR PIPE UNDERDRAINS
602301-04	INLET TYPE A
602401-07	PRECAST MANHOLE TYPE A 4' (1.22M) DIAMETER
602601-06	PRECAST REINFORCED CONCRETE FLAT SLAB TOP
602701-02	MANHOLE STEPS
604001-05	FRAME AND LIDS TYPE 1
604036-03	GRATE TYPE 8
604091-05	FRAME AND GRATE TYPE 24
606001-08	CONCRETE CURB TYPE B AND COMBINATION CONCRETE CURB AND GUTTER
606006-04	OUTLETS FOR CONCRETE CURB AND GUTTER TYPE B-6.24 (B-15.60)
606301-04	PC CONCRETE ISLANDS AND MEDIANS
606306-04	CORRUGATE PC CONCRETE MEDIANS
610001-09	SHOULDER INLET WITH CURB
630001-13	STEEL PLATE BEAM GUARDRAIL
630301-09	SHOULDER WIDENING FOR TYPE 1 (SPECIAL) GUARDRAIL TERMINALS
631031-18	TRAFFIC BARRIER TERMINAL, TYPE 6
631046-04	TRAFFIC BARRIER TERMINAL, TYPE 10
635001-02	DELINEATORS
642001-03	SHOULDER RUMBLE STRIPS, 16 In.
665001-02	WOVEN WIRE FENCE
701006-05	OFF-RD OPERATIONS, 2L, 2W, 15' (4.5M) TO 24"(600MM) FROM PAVEMENT EDGE
701101-05	OFF-RD OPERATIONS, MULTILANE, 15' (4.5 M0 TO 24"(600 mm) FROM PAVEMENT EDGE
701106-02	OFF-RD OPERATIONS, MULTILANE, MORE THAN 15' (4.5 M) AWAY
701400-12	APPROACH TO LANE CLOSURE, FREEWAY/EXPRESSWAY
701401-13	LANE CLOSURE, FREEWAY/EXPRESSWAY
701426-09	LANE CLOSURE, MULTILANE, INTERMITTENT OR MOVING OPER., FOR SPEEDS ≥ 45 MPH
701427-05	LANE CLOSURE, MULTILANE, INTERMITTENT OR MOVING OPER., FOR SPEEDS ≤ 40 MPH
701428-01	TRAFFIC CONTROL SETUP AND REMOVAL FREEWAY/EXPRESSWAY
701431-13	LANE CLOSURE, MULTILANE, UNDIV. WITH CROSSOVER, FOR SPEEDS ≥ 45 TO 55 MPH
701456-05	PARTIAL EXIT RAMP CLOSURE, FREEWAY/EXPRESSWAY
701601-09	URBAN LANE CLOSURE, MULTILANE, 1W OR 2W WITH NONTRAVERSABLE MEDIAN
701701-10	URBAN LANE CLOSURE, MULTILANE INTERSECTION
701801-06	SIDEWALK, CORNER OR CROSSWALK CLOSURE
701901-10	TRAFFIC CONTROL DEVICES
704001-08	TEMPORARY CONCRETE BARRIER
720001-01	SIGN PANEL MOUNTING DETAILS
720006-04	SIGN PANEL ERECTION DETAILS
720011-01	METAL POSTS FOR SIGNS, MARKERS & DELINEATORS
720016-04	MAST ARM MOUNTED STREET NAME SIGNS
720021-03	SIGNS PANELS EXTRUDED ALUMINUM TYPE
728001-01	TELESCOPING STEEL SIGN SUPPORT
780001-05	TYPICAL PAVEMENT MARKINGS
781001-04	TYPICAL APPLICATIONS RAISED REFLECTIVE PAVEMENT MARKERS
782006-01	GUARDRAIL AND BARRIER WALL REFLECTOR MOUNTING DETAILS
805001-01	ELECTRICAL SERVICE INSTALLATION DETAILS
812001-01	RACEWAYS EMBEDDED IN STRUCTURE
814001-03	HANDHOLES
814006-03	DOUBLE HANDHOLES
821101-03	LUMINAIRE WIRING IN POLE
825021-04	LIGHTIG CONTROLLER BASE MOUNTED, 240V
830001-03	LIGHT POLE ALUMINUM MAST ARM
836001-05	LIGHT POLE FOUNDATION
838001-01	BREAKAWAY DEVICES
857001-01	STANDARD PHASE DESIGNATION DIAGRAMS AND PHASE SEQUENCES
862001-01	UNINTERRUPTABLE POWER SUPPLY (UPS)
873001-02	TRAFFIC SIGNAL GROUNDING & BONDING
877001-08	STEEL MAST ARM ASSEMBLY AND POLE 16' THROUGH 55'
877011-10	STEEL COMB. MAST ARM ASSEMBLY AND POLE 16' THROUGH 55'
877012-07	STEEL COMB. MAST ARM ASSEMBLY AND POLE 56' THROUGH 75'
878001-11	CONCRETE FOUNDATION DETAILS
880001-01	SPAN WIRE MOUNTED SIGNALS AND FLASHING BEACON INSTALLATION
880006-01	TRAFFIC MOUNTING DETAIL

MODEL: Highway Standards - Highway Standards [Sheet]
FILE NAME: N:\IDOT\220628\CAD_Sheets\Civil\D264N98-sht-gennote.dgn

CHRISTOPHER B. BURKE ENGINEERING, LTD.
9575 W. Higgins Road, Suite 600
Rosemont, Illinois 60018
(847) 823-0500

USER NAME = nhowelllindgren	DESIGNED -	REVISED -	
	DRAWN -	REVISED -	
	CHECKED -	REVISED -	
PLOT DATE = 2/5/2025	DATE -	REVISED -	

STATE OF ILLINOIS
DEPARTMENT OF TRANSPORTATION

IL 38/I-39 INTERCHANGE IMPROVEMENTS
HIGHWAY STANDARDS

SCALE: | SHEET 2 OF 3 SHEETS | STA. 0+00.00 TO STA. 0+06.92

F.A.* RTE.	SECTION	COUNTY	TOTAL SHEETS	SHEET NO.
*	141-1HBR-3 & (9, 10) R-3	OGLE	508	3
		CONTRACT NO. 64N98		
	ILLINOIS	FED. AID PROJECT		

*FAI ROUTE 39 (I-39) & FAP 567 (IL 38)

GENERAL NOTES

1. SEEDING SHALL BE PLACED AS PER THE EROSION CONTROL PLANS. FERTILIZER NUTRIENTS SHALL BE APPLIED AT THE RATE SPECIFIED IN SECTIONS 250 AND 252 OF THE STANDARD SPECIFICATIONS. THIS SHALL BE INCLUDED IN THE COST OF THE SEEDING OR SODDING.
2. THE CONTRACTOR WILL BE REQUIRED TO FURNISH 5 ½" HIGH BRASS STENCILS AS APPROVED BY THE ENGINEER AND INSTALL STATIONING AT 250' INTERVALS. STATIONING SHALL BE PLACED ON BOTH LANES OF 2-LANE HIGHWAYS AND ON THE OUTSIDE LANES IN BOTH DIRECTIONS ON 4-LANE HIGHWAYS. THE STATIONS SHALL BE PLACED 6" INSIDE THE PAVEMENT MARKING EDGE SO THEY CAN BE READ FROM THE SHOULDER. THIS WORK WILL BE INCLUDED IN THE COST OF THE FINAL PAVEMENT SURFACE.
3. THIS BRIDGE STRUCTURE WILL RETAIN THE SAME NUMBER 071-1196.
4. CULVERT & BRIDGE FLOWS MUST BE MAINTAINED THROUGHOUT THE PROJECT. NORMAL FLOW SHALL BE ALLOWED TO PASS AT THE RATE IT ENTERS THE JOBSITE. HIGH FLOWS SHALL BE ALLOWED TO PASS WITHOUT CAUSING DAMAGE TO UPSTREAM PROPERTIES.
5. PRECAST GRATED INLET SPECIALS MAY BE SUBSTITUTED IN LIEU OF CAST-IN-PLACE UNITS WITH FLOORS UPON RECEIPT OF MANUFACTURER'S SHOP DRAWINGS WHICH HAVE BEEN APPROVED BY THE DEPARTMENT. THE CONTRACTOR SHALL BE RESPONSIBLE FOR VERIFYING NECESSARY DIMENSIONS ON THE EXISTING DRAINAGE STRUCTURE REQUIRED FOR THE ATTACHMENT. NO ADDITIONAL COST FOR THIS SUBSTITUTION SHALL BE ALLOWED.
6. THE COST OF MAKING STORM SEWER CONNECTIONS TO EXISTING DRAINAGE STRUCTURES SHALL BE INCLUDED IN THE VARIOUS CONTRACT UNIT PRICES FOR STORM SEWER.
7. LATERAL DISTANCES FROM THE CENTERLINE ON ALL INLETS ARE TO THE FACE OF THE INLET.
8. THE CONTRACTOR SHALL SUPPLY THE RESIDENT ENGINEER WITH THE MANUFACTURER'S INSTALLATION REQUIREMENTS FOR THE TYPE OF STEEL PLATE BEAM GUARDRAIL TERMINAL TYPE 1 SPECIAL (TANGENT) OR STEEL PLATE BEAM GUARDRAIL TERMINAL TYPE I SPECIAL (FLARED).
9. DELINEATORS SHALL BE INSTALLED AS SHOWN IN STANDARD 635001, EXCEPT THAT THE POST SHALL BE ROTATED 180 AND ONLY METAL-BACKED DELINEATORS SHALL BE PERMITTED. DELINEATORS SHALL BE PLACED AT THE ENDS OF APPROACH GUARDRAIL TERMINAL SECTIONS, AND AT EACH HEADWALL OR END SECTION OF AR CULVERTS. THIS WORK WILL BE PAID FOR AT THE CONTRACT UNIT PRICE EACH FOR DELINEATORS.
10. THE CONTRACTOR SHALL BE RESPONSIBLE FOR COLLECTING AND MAINTAINING AN ELECTRONIC LOG OF ALL STAKEOUT SURVEY THAT IS PERFORMED ON THE JOB, EITHER BY HIM/HER OR ANY SUB-CONTRACTOR PERFORMING THE STAKEOUT. UPON REQUEST, ALL LOGS SHALL BE SUBMITTED TO THE DEPARTMENT. NO ADDITIONAL COMPENSATION WILL BE ALLOWED FOR THIS WORK BUT SHALL BE CONSIDERED INCLUDED IN THE COST FOR CONSTRUCTION LAYOUT.
11. PAVEMENT MARKING SHALL BE DONE ACCORDING TO STANDARD 780001, EXCEPT AS FOLLOWS:
    a. ALL WORDS, SUCH AS ONLY, SHALL BE 8 FEET HIGH.
    b. ALL NON-FREEWAY ARROWS SHALL BE THE LARGE SIZE.
    c. THE DISTANCE BETWEEN YELLOW NO-PASSING LINES SHALL BE 8 INCHES, NOT 7 INCHES, AS SHOWN IN THE DETAIL OF TYPICAL LANE AND EDGE LINES.
    d. CENTERLINE SKIP DASH PAVEMENT MARKING ON MULTI-LANE DIVIDED, MULTI-LANE UNDIVIDED, AND ONE-WAY ROADWAY SHALL BE ACCORDING TO DISTRICT STANDARD 41.1.

SURVEY MARKERS

12. PERMANENT SURVEY MARKERS, TYPE II, SHALL BE SET AT INTERVALS OF 1 MILE OR AS DIRECTED BY THE ENGINEER. BRIDGE OR CULVERT PROJECTS SHALL HAVE ONE SURVEY MARKER PLACED NEAR THE STRUCTURE
13. PERMANENT SURVEY MARKERS, TYPE II SHALL BE CAST-IN-PLACE AS SHOWN ON DISTRICT STANDARD 66.2, OR ANOTHER OPTION WOULD BE TO INSTALL A VAULTED STYLE MONUMENT AS DESCRIBED BY NGS AS A 3D MONUMENT (TOP SECURITY SLEEVE ROD MONUMENT), WITH INSTALLATION INSTRUCTIONS PROVIDED BY THE DISTRICT CHIEF OF SURVEYS. IF POURED IN PLACE, THE BOTTOM OF THE MARKER SHALL BE 5'-0" BELOW THE GROUND SURFACE.
14. THE PERMANENT SURVEY MARKERS, IF POSSIBLE, SHALL BE INSTALLED AT THE BEGINNING OF THE JOB AND PROTECTED THROUGHOUT.
15. THIS PROJECT CONTAINS SURVEY MONUMENTS THAT MAY BE DISTURBED. THE CONTRACTOR MUST NOTIFY THE RESIDENT ENGINEER, ROGER INBODEN, CHIEF OF SURVEYS, AT ROGER.INBODEN@ILLINOIS.GOV, A MINIMUM OF 21 DAYS BEFORE ANY ACTIVITY THAT MAY DISTURB A MONUMENT IN THE PAVEMENT. THIS WOULD INCLUDE SECTION CORNERS, QUARTER CORNERS, WITNESS CORNERS, OR ANYTHING ELSE THAT COULD PERTAIN TO A PROPERTY CORNER THAT WOULD BE IN VIOLATION OF 765 ILCS 205/11.
16. ALL GUTTER OUTLETS SHALL BE EXTENDED TO DITCH FLOW AS DIRECTED BY THE ENGINEER.

NON-SPECIAL WASTE

17. BASED ON DISCUSSIONS WITH DISTRICT PERSONNEL, DISTRICT 2 AGREES THAT MOST OF THE MATERIAL CLASSIFIED AS 669.05(A)(1), 669.05(A)(2), AND 669.05(A)(3) DOES NOT CONSTITUTE A SERIOUS ENVIRONMENTAL CONCERN AND THE MATERIAL SHALL BE REUSED ON SITE AS EMBANKMENT OR FILL IN ACCORDANCE WITH THE PLANS AND SPECIAL PROVISIONS. THE DISTRICT HAS COMMITTED TO PLACING APPROXIMATELY 7,772 CUBIC YARDS OF REGULATED SUBSTANCES MATERIAL CLASSIFIED AS 669.05(A)(1) ALONG IL 38 AS FILL OR EMBANKMENT WITHIN THE PROJECT LIMITS. IF PLANS FOR THIS PROJECT CHANGE, AND MATERIAL CLASSIFIED AS 669.05(A)(1), IS TO BE REMOVED, THE REGULATED SUBSTANCES MATERIAL REFERENCED IN THE SPECIAL PROVISIONS WILL NEED TO BE MANAGED USING ARTICLE 109.04 OF THE STANDARD SPECIFICATIONS AS NON-SPECIAL WASTE. THE INTENT OF THE COMMITMENT IS NOT COVERED BY SECTION 202 OF THE STANDARD SPECIFICATIONS.

UTILITIES

18. THE FOLLOWING LISTED UTILITIES LOCATED WITHIN THE PROJECT LIMITS OR IMMEDIATELY ADJACENT TO THE PROJECT CONSTRUCTION LIMITS ARE MEMBERS OF JULIE:

NAME	COMPANY	TYPE	PHONE NUMBER
PATRICK HIGGINS	BLUEBIRD NETWORK	FIBER INTERNET	(314) 270-8730
MARTHA GIERAS	COMCAST	CABLE	(224) 229-5862
KALIN HINSHAW	FRONTIER COMMUNICATIONS	FIBER INTERNET	(815) 895-1515
STEVEN L. CREASEY SR.	ILLINOIS-CMS	FIBER OPTIC	(217) 558-1176
CHARLES "CHIP" PARROTT	NICOR GAS	GAS	(630) 388-3319
BLAKE TOLIVER	ROCHELLE MUNICIPAL UTILITIES	VARIOUS	(815) 561-2034

    a. IDOT IS NOT A MEMBER OF JULIE. CONTRACTOR SHALL BE RESPONSIBLE FOR LOCATING IDOT FACILITIES.
    b. IT SHALL BE THE CONTRACTOR'S RESPONSIBILITY TO CONTACT THE MUNICIPALITY TO DETERMINE APPROVED METHODS OF UTILITY STRUCTURE ADJUSTMENT. UTILITY STRUCTURES MAY INCLUDE, BUT ARE NOT LIMITED TO, MANHOLES, WATER VALVES, HANDHOLES, ETC. ALL MATERIALS AND WORK NECESSARY TO COMPLETE ADJUSTMENTS PER MUNICIPALITY REQUIREMENTS SHALL BE CONSIDERED INCLUDED IN THE COST OF THE ASSOCIATED ADJUSTMENT PAY ITEM.
19. WHEN RELOCATE TEMPORARY CONCRETE BARRIER IS SPECIFIED, THE WALL SHALL BE REMOVED, STORAGE AND TRANSPORTATION TO AND FROM STORAGE, WHEN THE WALL IS NOT NEEDED FOR A TIME AS SHOWN ON THE STAGING PLANS, RELOCATED AND REINSTATED AT THE NEW LOCATION. THE REINSTALLATION REQUIREMENTS SHALL BE THE SAME AS THOSE FOR A NEW INSTALLATION. THIS SHALL BE PAID FOR AT THE CONTRACT UNIT PRICE PER FOOT FOR RELOCATE TEMPORARY CONCRETE BARRIER
    a. NOTE: TEMPORARY CONCRETE BARRIER SHALL BE PINNED TO THE PAVEMENT WHERE A HAZARD EXISTS WITHIN 37 INCHES. BETWEEN 12 INCHES AND 37 INCHES, RISK ASSESSMENT SHALL BE PERFORMED ACCORDING TO SAFETY ENGINEERING POLICY MEMORANDUM 4-15, DATED 3-1-15. THE DESIGNER SHOULD ADD THE LOCATIONS THAT MUST BE PINNED. THERE COULD BE MULTIPLE LOCATIONS ON A PROJECT. THE DESIRABLE MINIMUM OFFSET FROM THE TRAVEL LANE TO THE TEMPORARY CONCRETE BARRIER IS 2 FEET.
    b. THE TEMPORARY CONCRETE BARRIER SHALL BE PINNED TO THE PAVEMENT WITH 3 ANCHOR PINS PER SECTION ON THE TRAFFIC SIDE OF THE BARRIER WALL AT THE FOLLOWING LOCATIONS:
        i. SEE SCHEDULE OF QUANTITIES IN PLANS FOR LOCATIONS OF PINNED BARRIER WALL
    c. THE BARRIER UNIT AT EACH END SHALL BE ANCHORED AS SPECIFIED IN ARTICLE 704.04. ALL ANCHORING AND PINNING HOLES SHALL BE CORE DRILLED.

COMMITMENTS

"TREES THREE (3) INCHES OR GREATER IN DIAMETER AT BREAST HEIGHT WILL NOT BE CLEARED FROM APRIL 1st THROUGH SEPTEMBER 30th. THE US FISH AND WILDLIFE SERVICE CONCURRED WITH THIS DETERMINATION AND DATE RESTRICTION ON TREE CLEARING ON 10\16\2023."

THE PROPOSED FIRE HYDRANT AT THE NORTHWEST CORNER OF IL 38 & DEMENT ROAD SHALL BE PLACED 8 FEET BEHIND THE PROPOSED BACK OF CURB (TO THE CENTER OF THE HYDRANT).

				ROADWAY		BRIDGE	BIKE PATH	ROADWAY LIGHTING		TRAFFIC SIGNALS		ROADWAY SIGNING
				IL 38 & DDI RAMPS	DEMENT ROAD	I-39	IL 38	IL 38 & DDI RAMPS	IL 38 (EAST & WEST OF INTERCHANGE) & DEMENT ROAD	DDI RAMPS & INTERCONNECT	DEMENT ROAD	IL 38 & DDI RAMPS
				0004	0006	0013	0021	0021	0021	0021	0021	0044
CODE NUMBER	ITEM DESCRIPTION	UNIT	TOTAL QUANTITY	80% FED 20% STATE	80% FED 20% STATE	80% FED 20% STATE	80% FED 20% STATE	80% FED 20% STATE	100% CITY	80% FED 20% STATE	80% FED 10% STATE 10% CITY	80% FED 20% STATE
20200100	EARTH EXCAVATION	CU YD	13500	13500								
20200200	ROCK EXCAVATION	CU YD	175	175								
20201200	REMOVAL AND DISPOSAL OF UNSUITABLE MATERIAL	CU YD	500	500								
20400800	FURNISHED EXCAVATION	CU YD	46250	46250								
20800150	TRENCH BACKFILL	CU YD	753	733				8	12			
21101505	TOPSOIL EXCAVATION AND PLACEMENT	CU YD	14250	14250								
21101615	TOPSOIL FURNISH AND PLACE, 4"	SQ YD	9500	9500								
25000210	SEEDING, CLASS 2A	ACRE	5.25	5.25								
25000312	SEEDING, CLASS 4A	ACRE	7.75	7.75								
25000400	NITROGEN FERTILIZER NUTRIENT	POUND	1170	1170								
25000500	PHOSPHORUS FERTILIZER NUTRIENT	POUND	1170	1170								
25000600	POTASSIUM FERTILIZER NUTRIENT	POUND	1170	1170								
25000750	MOWING	ACRE	5.25	5.25								
25100630	EROSION CONTROL BLANKET	SQ YD	61874	61874								
28000250	TEMPORARY EROSION CONTROL SEEDING	POUND	153	153								
28000305	TEMPORARY DITCH CHECKS	FOOT	756	756								
28000400	PERIMETER EROSION BARRIER	FOOT	7066	7066								
28000500	INLET AND PIPE PROTECTION	EACH	3	3								
28000510	INLET FILTERS	EACH	23	23								

* SPECIALTY ITEM

** 100% CITY

MODEL: SOQ - 1 [Sheet]
FILE NAME: N:\IDOT22\0628\CAD_Sheets\Civil\D264N98-sht-SOQ.dgn

CHRISTOPHER B. BURKE ENGINEERING, LTD.
9575 W. Higgins Road, Suite 600
Rosemont, Illinois 60018
(847) 823-0500

USER NAME = nhowelllindgren	DESIGNED -	REVISED -	
	DRAWN -	REVISED -	
	CHECKED -	REVISED -	
PLOT DATE = 2/6/2025	DATE -	REVISED -	

STATE OF ILLINOIS
DEPARTMENT OF TRANSPORTATION

IL 38/I-39 INTERCHANGE IMPROVEMENTS
SUMMARY OF QUANTITIES

SCALE: | SHEET 1 OF 19 SHEETS | STA. TO STA.

F.A.* RTE.	SECTION	COUNTY	TOTAL SHEETS	SHEET NO.
*	141-1HBR-3 & (9, 10) R-3	OGLE	508	5
		CONTRACT NO. 64N98		
	ILLINOIS	FED. AID PROJECT		

*FAI ROUTE 39 (I-39) & FAP 567 (IL 38)

REV. 3/21/25

				ROADWAY		BRIDGE	BIKE PATH	ROADWAY LIGHTING		TRAFFIC SIGNALS		ROADWAY SIGNING
				IL 38 & DDI RAMPS	DEMENT ROAD	I-39	IL 38	IL 38 & DDI RAMPS	IL 38 (EAST & WEST OF INTERCHANGE) & DEMENT ROAD	DDI RAMPS & INTERCONNECT	DEMENT ROAD	IL 38 & DDI RAMPS
				0004	0006	0013	0021	0021	0021	0021	0021	0044
CODE NUMBER	ITEM DESCRIPTION	UNIT	TOTAL QUANTITY	80% FED 20% STATE	80% FED 20% STATE	80% FED 20% STATE	80% FED 20% STATE	80% FED 20% STATE	100% CITY	80% FED 20% STATE	80% FED 10% STATE 10% CITY	80% FED 20% STATE
28001100	TEMPORARY EROSION CONTROL BLANKET	SQ YD	82287	82287								
28100105	STONE RIPRAP, CLASS A3	SQ YD	14	14								
28100107	STONE RIPRAP, CLASS A4	SQ YD	758	758								
28100109	STONE RIPRAP, CLASS A5	SQ YD	158	158								
28200200	FILTER FABRIC	SQ YD	931	931								
30300001	AGGREGATE SUBGRADE IMPROVEMENT	CU YD	500	500								
30300112	AGGREGATE SUBGRADE IMPROVEMENT 12"	SQ YD	19808	19808								
30300118	AGGREGATE SUBGRADE IMPROVEMENT 18"	SQ YD	12315	12315								
31101100	SUBBASE GRANULAR MATERIAL, TYPE B	CU YD	865	813			52					
31101200	SUBBASE GRANULAR MATERIAL, TYPE B 4"	SQ YD	4938	844			4094					
31101400	SUBBASE GRANULAR MATERIAL, TYPE B 6"	SQ YD	1001	1001								
31101600	SUBBASE GRANULAR MATERIAL, TYPE B 8"	SQ YD	455	455								
31200500	STABILIZED SUBBASE - HOT-MIX ASPHALT, 4"	SQ YD	30282	30282								
40600290	BITUMINOUS MATERIALS (TACK COAT)	POUND	986	986								
40600990	TEMPORARY RAMP	SQ YD	2125	2125								
40603085	HOT-MIX ASPHALT BINDER COURSE, IL-19.0, N70	TON	313	313								
42000060	WELDED WIRE REINFORCEMENT	SQ YD	300	300								
42000080	PAVEMENT CONNECTOR (PCC) FOR BRIDGE APPROACH SLAB	SQ YD	300	300								
42000500	PORTLAND CEMENT CONCRETE PAVEMENT 10"	SQ YD	161	161								

* SPECIALTY ITEM

** 100% CITY

MODEL: SOQ - 2 [Sheet]
FILE NAME: N:\IDOT22\0628\CAD_Sheets\Civil\D264N98-sht-SOQ.dgn

CHRISTOPHER B. BURKE ENGINEERING, LTD.
9575 W. Higgins Road, Suite 600
Rosemont, Illinois 60018
(847) 823-0500

USER NAME = nhowelllindgren	DESIGNED -	REVISED -	
	DRAWN -	REVISED -	
	CHECKED -	REVISED -	
PLOT DATE = 2/6/2025	DATE -	REVISED -	

STATE OF ILLINOIS
DEPARTMENT OF TRANSPORTATION

IL 38/I-39 INTERCHANGE IMPROVEMENTS
SUMMARY OF QUANTITIES

SCALE: | SHEET 2 OF 19 SHEETS | STA. TO STA.

F.A.* RTE.	SECTION	COUNTY	TOTAL SHEETS	SHEET NO.
*	141-1HBR-3 & (9, 10) R-3	OGLE	508	6
		CONTRACT NO. 64N98		
	ILLINOIS	FED. AID PROJECT		

*FAI ROUTE 39 (I-39) & FAP 567 (IL 38)

REV. 3/21/25

				ROADWAY		BRIDGE	BIKE PATH	ROADWAY LIGHTING		TRAFFIC SIGNALS		ROADWAY SIGNING
				IL 38 & DDI RAMPS	DEMENT ROAD	I-39	IL 38	IL 38 & DDI RAMPS	IL 38 (EAST & WEST OF INTERCHANGE) & DEMENT ROAD	DDI RAMPS & INTERCONNECT	DEMENT ROAD	IL 38 & DDI RAMPS
				0004	0006	0013	0021	0021	0021	0021	0021	0044
CODE NUMBER	ITEM DESCRIPTION	UNIT	TOTAL QUANTITY	80% FED 20% STATE	80% FED 20% STATE	80% FED 20% STATE	80% FED 20% STATE	80% FED 20% STATE	100% CITY	80% FED 20% STATE	80% FED 10% STATE 10% CITY	80% FED 20% STATE
42000511	PORTLAND CEMENT CONCRETE PAVEMENT 10 1/2" (JOINTED)	SQ YD	21344	21344								
42001300	PROTECTIVE COAT	SQ YD	35926	35926								
42400300	PORTLAND CEMENT CONCRETE SIDEWALK 6 INCH	SQ FT	40718				40718					
44000100	PAVEMENT REMOVAL	SQ YD	19409	19409								
44000159	HOT-MIX ASPHALT SURFACE REMOVAL, 2 1/2"	SQ YD	2085	2085								
44000500	COMBINATION CURB AND GUTTER REMOVAL	FOOT	6464	6464								
44000600	SIDEWALK REMOVAL	SQ FT	770	770								
44003100	MEDIAN REMOVAL	SQ FT	13868	13868								
44004250	PAVED SHOULDER REMOVAL	SQ YD	7126	7126								
44200050	WELDED WIRE REINFORCEMENT	SQ YD	4157	4157								
44200966	CLASS B PATCHES, TYPE I, 10 INCH	SQ YD	2	2								
44200970	CLASS B PATCHES, TYPE II, 10 INCH	SQ YD	41	41								
44200974	CLASS B PATCHES, TYPE III, 10 INCH	SQ YD	685	685								
44200976	CLASS B PATCHES, TYPE IV, 10 INCH	SQ YD	3592	3286	306							
44201299	DOWEL BARS 1 1/2"	EACH	2252	1831	421							
44213200	SAW CUTS	FOOT	8217	6878	1339							
44213204	TIE BARS 3/4"	EACH	1575	1306	269							
44213208	TIE BARS 1 1/4"	EACH	898		898							
48100200	AGGREGATE SHOULDERS, TYPE A	CU YD	168	168								

* SPECIALTY ITEM

** 100% CITY

MODEL: SOQ - 3 [Sheet]
FILE NAME: N:\IDOT22\0628\CAD_Sheets\Civil\D264N98-sht-SOQ.dgn

CHRISTOPHER B. BURKE ENGINEERING, LTD.
9575 W. Higgins Road, Suite 600
Rosemont, Illinois 60018
(847) 823-0500

USER NAME = nhowelllindgren	DESIGNED -	REVISED -	
	DRAWN -	REVISED -	
	CHECKED -	REVISED -	
PLOT DATE = 2/6/2025	DATE -	REVISED -	

STATE OF ILLINOIS
DEPARTMENT OF TRANSPORTATION

IL 38/I-39 INTERCHANGE IMPROVEMENTS
SUMMARY OF QUANTITIES

SCALE: SHEET 3 OF 19 SHEETS STA. TO STA.

F.A.* RTE.	SECTION	COUNTY	TOTAL SHEETS	SHEET NO.
*	141-1HBR-3 & (9, 10) R-3	OGLE	508	7
		CONTRACT NO. 64N98		
	ILLINOIS	FED. AID PROJECT		

*FAI ROUTE 39 (I-39) & FAP 567 (IL 38)

REV. 3/21/25

				ROADWAY		BRIDGE	BIKE PATH	ROADWAY LIGHTING		TRAFFIC SIGNALS		ROADWAY SIGNING
				IL 38 & DDI RAMPS	DEMENT ROAD	I-39	IL 38	IL 38 & DDI RAMPS	IL 38 (EAST & WEST OF INTERCHANGE) & DEMENT ROAD	DDI RAMPS & INTERCONNECT	DEMENT ROAD	IL 38 & DDI RAMPS
				0004	0006	0013	0021	0021	0021	0021	0021	0044
CODE NUMBER	ITEM DESCRIPTION	UNIT	TOTAL QUANTITY	80% FED 20% STATE	80% FED 20% STATE	80% FED 20% STATE	80% FED 20% STATE	80% FED 20% STATE	100% CITY	80% FED 20% STATE	80% FED 10% STATE 10% CITY	80% FED 20% STATE
48300510	PORTLAND CEMENT CONCRETE SHOULDERS 10 1/2"	SQ YD	5304	5304								
50100300	REMOVAL OF EXISTING STRUCTURES NO. 1	EACH	1	1								
50102400	CONCRETE REMOVAL	CU YD	58.2			58.2						
50104720	REMOVAL OF EXISTING CONCRETE DECK	EACH	1			1						
50157300	PROTECTIVE SHIELD	SQ YD	2180			2180						
50200100	STRUCTURE EXCAVATION	CU YD	180			180						
50200400	ROCK EXCAVATION FOR STRUCTURES	CU YD	5.6								5.6	
50200450	REMOVAL AND DISPOSAL OF UNSUITABLE MATERIAL FOR STRUCTURES	CU YD	61	61								
50300225	CONCRETE STRUCTURES	CU YD	57.1			57.1						
50300255	CONCRETE SUPERSTRUCTURE	CU YD	731.9			731.9						
50300260	BRIDGE DECK GROOVING	SQ YD	2184			2184						
50300300	PROTECTIVE COAT	SQ YD	3605			3605						
50301350	CONCRETE SUPERSTRUCTURE (APPROACH SLAB)	CU YD	257.9			257.9						
50500405	FURNISHING AND ERECTING STRUCTURAL STEEL	POUND	6510			6510						
50500505	STUD SHEAR CONNECTORS	EACH	1044			1044						
50800105	REINFORCEMENT BARS	POUND	79350	79350								
50800205	REINFORCEMENT BARS, EPOXY COATED	POUND	278224			277040						1184
50800515	BAR SPLICERS	EACH	1025			1025						
50901750	PARAPET RAILING	FOOT	1365	819		546						

* SPECIALTY ITEM

** 100% CITY

MODEL: SOQ - 4 [Sheet]
FILE NAME: N:\IDOT\22062B\CAD_Sheets\Civil\D284N99-sht-SOQ.dgn

CHRISTOPHER B. BURKE ENGINEERING, LTD.
9575 W. Higgins Road, Suite 600
Rosemont, Illinois 60018
(847) 823-0500

USER NAME = nhowelllindgren	DESIGNED -	REVISED -	
	DRAWN -	REVISED -	
	CHECKED -	REVISED -	
PLOT DATE = 2/6/2025	DATE -	REVISED -	

STATE OF ILLINOIS
DEPARTMENT OF TRANSPORTATION

IL 38/I-39 INTERCHANGE IMPROVEMENTS
SUMMARY OF QUANTITIES

SCALE: SHEET 4 OF 19 SHEETS STA. TO STA.

F.A.* RTE.	SECTION	COUNTY	TOTAL SHEETS	SHEET NO.
*	141-1 HBR-3 & (9, 10) R-3	OGLE	508	8

CONTRACT NO. 64N98

ILLINOIS | FED. AID PROJECT

*FAI ROUTE 39 (I-39) & FAP 562 (IL 38)

REV. 3/24/25 REV. 3/21/25

				ROADWAY		BRIDGE	BIKE PATH	ROADWAY LIGHTING		TRAFFIC SIGNALS		ROADWAY SIGNING
				IL 38 & DDI RAMPS	DEMENT ROAD	I-39	IL 38	IL 38 & DDI RAMPS	IL 38 (EAST & WEST OF INTERCHANGE) & DEMENT ROAD	DDI RAMPS & INTERCONNECT	DEMENT ROAD	IL 38 & DDI RAMPS
				0004	0006	0013	0021	0021	0021	0021	0021	0044
CODE NUMBER	ITEM DESCRIPTION	UNIT	TOTAL QUANTITY	80% FED 20% STATE	80% FED 20% STATE	80% FED 20% STATE	80% FED 20% STATE	80% FED 20% STATE	100% CITY	80% FED 20% STATE	80% FED 10% STATE 10% CITY	80% FED 20% STATE
51500100	NAME PLATES	EACH	2	1		1						
52100010	ELASTOMERIC BEARING ASSEMBLY, TYPE I	EACH	24			24						
52100520	ANCHOR BOLTS, 1"	EACH	48			48						
52200010	TEMPORARY SHEET PILING	SQ FT	390			390						
52200020	TEMPORARY SOIL RETENTION SYSTEM	SQ FT	449	449								
54002020	EXPANSION BOLTS 3/4 INCH	EACH	58	58								
54003000	CONCRETE BOX CULVERTS	CU YD	260.7	260.7								
54213657	PRECAST REINFORCED CONCRETE FLARED END SECTIONS 12"	EACH	18	18								
54213663	PRECAST REINFORCED CONCRETE FLARED END SECTIONS 18"	EACH	2	2								
54214515	PRECAST REINFORCED CONCRETE FLARED END SECTIONS, EQUIVALENT ROUND-SIZE 30"	EACH	1	1								
54214521	PRECAST REINFORCED CONCRETE FLARED END SECTIONS, EQUIVALENT ROUND-SIZE 36"	EACH	2	2								
550A0050	STORM SEWERS, CLASS A, TYPE 1 12"	FOOT	341	341								
550A0090	STORM SEWERS, CLASS A, TYPE 1 18"	FOOT	103	103								
550A0340	STORM SEWERS, CLASS A, TYPE 2 12"	FOOT	722	722								
550A0360	STORM SEWERS, CLASS A, TYPE 2 15"	FOOT	471	471								
550A0380	STORM SEWERS, CLASS A, TYPE 2 18"	FOOT	55	55								
550A0640	STORM SEWERS, CLASS A, TYPE 3 12"	FOOT	457	457								
550A0750	STORM SEWERS, CLASS A, TYPE 3 36"	FOOT	31	31								
550A0940	STORM SEWERS, CLASS A, TYPE 4 12"	FOOT	133	133								

* SPECIALTY ITEM

** 100% CITY

MODEL: SOQ - 5 [Sheet]
FILE NAME: N:\IDOT\22062B\CAD_Sheets\Civil\D284N99-sht-SOQ.dgn

CHRISTOPHER B. BURKE ENGINEERING, LTD.
9575 W. Higgins Road, Suite 600
Rosemont, Illinois 60018
(847) 823-0500

USER NAME = nhowell\lindgren	DESIGNED -	REVISED -	
	DRAWN -	REVISED -	
	CHECKED -	REVISED -	
PLOT DATE = 2/6/2025	DATE -	REVISED -	

STATE OF ILLINOIS
DEPARTMENT OF TRANSPORTATION

IL 38/I-39 INTERCHANGE IMPROVEMENTS
SUMMARY OF QUANTITIES

SCALE: SHEET 5 OF 19 SHEETS STA. TO STA.

F.A.* RTE.	SECTION	COUNTY	TOTAL SHEETS	SHEET NO.
*	141-1 HBR-3 & (9, 10) R-3	OGLE	508	9

CONTRACT NO. 64N98

ILLINOIS FED. AID PROJECT

*FAI ROUTE 39 (I-39) & FAP 567 (IL 38)

REV. 3/24/25 REV. 3/21/25

				ROADWAY		BRIDGE	BIKE PATH	ROADWAY LIGHTING		TRAFFIC SIGNALS		ROADWAY SIGNING
				IL 38 & DDI RAMPS	DEMENT ROAD	I-39	IL 38	IL 38 & DDI RAMPS	IL 38 (EAST & WEST OF INTERCHANGE) & DEMENT ROAD	DDI RAMPS & INTERCONNECT	DEMENT ROAD	IL 38 & DDI RAMPS
				0004	0006	0013	0021	0021	0021	0021	0021	0044
CODE NUMBER	ITEM DESCRIPTION	UNIT	TOTAL QUANTITY	80% FED 20% STATE	80% FED 20% STATE	80% FED 20% STATE	80% FED 20% STATE	80% FED 20% STATE	100% CITY	80% FED 20% STATE	80% FED 10% STATE 10% CITY	80% FED 20% STATE
550A4300	STORM SEWERS, CLASS A, TYPE 1 EQUIVALENT ROUND-SIZE 30"	FOOT	40	40								
550A4500	STORM SEWERS, CLASS A, TYPE 1 EQUIVALENT ROUND-SIZE 36"	FOOT	118	118								
55100500	STORM SEWER REMOVAL 12"	FOOT	749	749								
55101200	STORM SEWER REMOVAL 24"	FOOT	35	35								
55101600	STORM SEWER REMOVAL 36"	FOOT	35	35								
56400500	FIRE HYDRANTS TO BE REMOVED	EACH	1	1								
56400820	FIRE HYDRANT WITH AUXILIARY VALVE AND VALVE BOX	EACH	1	1								
58600101	GRANULAR BACKFILL FOR STRUCTURES	CU YD	180			180						
59000200	EPOXY CRACK INJECTION	FOOT	239	92		147						
60100060	CONCRETE HEADWALLS FOR PIPE DRAINS	EACH	21	21								
60108206	PIPE UNDERDRAINS, TYPE 2, 6"	FOOT	6584	6584								
60218300	MANHOLES, TYPE A, 4'-DIAMETER, TYPE 1 FRAME, OPEN LID	EACH	2	2								
60218400	MANHOLES, TYPE A, 4'-DIAMETER, TYPE 1 FRAME, CLOSED LID	EACH	4	4								
60219000	MANHOLES, TYPE A, 4'-DIAMETER, TYPE 8 GRATE	EACH	6	6								
60219540	MANHOLES, TYPE A, 4'-DIAMETER, TYPE 24 FRAME AND GRATE	EACH	4	4								
60221100	MANHOLES, TYPE A, 5'-DIAMETER, TYPE 1 FRAME, CLOSED LID	EACH	2	2								
60224446	MANHOLES, TYPE A, 7'-DIAMETER, TYPE 1 FRAME, CLOSED LID	EACH	2	2								
60234200	INLETS, TYPE A, TYPE 1 FRAME, OPEN LID	EACH	8	8								
60236800	INLETS, TYPE A, TYPE 11 FRAME AND GRATE	EACH	1	1								

* SPECIALTY ITEM

** 100% CITY

MODEL: SOQ - 6 [Sheet]
FILE NAME: N:\IDOT\22062B\CAD_Sheets\Civil\D284N98-sht-SOQ.dgn

CHRISTOPHER B. BURKE ENGINEERING, LTD.
9575 W. Higgins Road, Suite 600
Rosemont, Illinois 60018
(847) 823-0500

USER NAME = nhowell\lindgren	DESIGNED -	REVISED -	
	DRAWN -	REVISED -	
	CHECKED -	REVISED -	
PLOT DATE = 2/6/2025	DATE -	REVISED -	

STATE OF ILLINOIS
DEPARTMENT OF TRANSPORTATION

IL 38/I-39 INTERCHANGE IMPROVEMENTS
SUMMARY OF QUANTITIES

SCALE: SHEET 6 OF 19 SHEETS STA. TO STA.

F.A.* RTE.	SECTION	COUNTY	TOTAL SHEETS	SHEET NO.
*	141-1 HBR-3 & (9, 10) R-3	OGLE	508	10
		CONTRACT NO. 64N98		
	ILLINOIS	FED. AID PROJECT		

*FAI ROUTE 39 (I-39) & FAP 567 (IL 38)

REV. 3/24/25 REV. 3/21/25

				ROADWAY		BRIDGE	BIKE PATH	ROADWAY LIGHTING		TRAFFIC SIGNALS		ROADWAY SIGNING
				IL 38 & DDI RAMPS	DEMENT ROAD	I-39	IL 38	IL 38 & DDI RAMPS	IL 38 (EAST & WEST OF INTERCHANGE) & DEMENT ROAD	DDI RAMPS & INTERCONNECT	DEMENT ROAD	IL 38 & DDI RAMPS
				0004	0006	0013	0021	0021	0021	0021	0021	0044
CODE NUMBER	ITEM DESCRIPTION	UNIT	TOTAL QUANTITY	80% FED 20% STATE	80% FED 20% STATE	80% FED 20% STATE	80% FED 20% STATE	80% FED 20% STATE	100% CITY	80% FED 20% STATE	80% FED 10% STATE 10% CITY	80% FED 20% STATE
60240210	INLETS, TYPE B, TYPE 1 FRAME, OPEN LID	EACH	4	4								
60255500	MANHOLES TO BE ADJUSTED	EACH	1	1								
60500040	REMOVING MANHOLES	EACH	4	4								
60600095	CLASS SI CONCRETE (OUTLET)	CU YD	3	3								
60600605	CONCRETE CURB, TYPE B	FOOT	331	331								
60603500	COMBINATION CONCRETE CURB AND GUTTER, TYPE B-6.06	FOOT	787	787								
60605000	COMBINATION CONCRETE CURB AND GUTTER, TYPE B-6.24	FOOT	7612	7612								
60618300	CONCRETE MEDIAN SURFACE, 4 INCH	SQ FT	17739	17739								
60905305	BOX CULVERTS TO BE CLEANED	FOOT	297	297								
61133100	FIELD TILE JUNCTION VAULTS, 2' DIA.	EACH	5	5								
* 63000007	STEEL PLATE BEAM GUARDRAIL, TYPE B, 6 FOOT POSTS	FOOT	250	250								
* 63100085	TRAFFIC BARRIER TERMINAL, TYPE 6	EACH	2	2								
* 63100105	TRAFFIC BARRIER TERMINAL, TYPE 10	EACH	2	2								
* 63100167	TRAFFIC BARRIER TERMINAL, TYPE 1 (SPECIAL) TANGENT	EACH	4	4								
63200310	GUARDRAIL REMOVAL	FOOT	771	771								
63500105	DELINEATORS	EACH	79	79								
64200116	SHOULDER RUMBLE STRIPS, 16 INCH	FOOT	4293	4293								
66500105	WOVEN WIRE FENCE, 4'	FOOT	872	872								
* 66900200	NON-SPECIAL WASTE DISPOSAL	CU YD	312	312								

* SPECIALTY ITEM

** 100% CITY

MODEL: SOQ - 7 [Sheet]
FILE NAME: N:\IDOT\22062B\CAD_Sheets\Civil\D284N99-sht-SOQ.dgn

CHRISTOPHER B. BURKE ENGINEERING, LTD.
9575 W. Higgins Road, Suite 600
Rosemont, Illinois 60018
(847) 823-0500

USER NAME = nhowellindgren	DESIGNED -	REVISED -	
	DRAWN -	REVISED -	
	CHECKED -	REVISED -	
PLOT DATE = 2/6/2025	DATE -	REVISED -	

STATE OF ILLINOIS
DEPARTMENT OF TRANSPORTATION

IL 38/I-39 INTERCHANGE IMPROVEMENTS
SUMMARY OF QUANTITIES

SCALE: SHEET 7 OF 19 SHEETS STA. TO STA.

F.A.* RTE.	SECTION	COUNTY	TOTAL SHEETS	SHEET NO.
*	141-1 HBR-3 & (9, 10) R-3	OGLE	508	11

CONTRACT NO. 64N98

ILLINOIS | FED. AID PROJECT

*FAI ROUTE 39 (I-39) & FAP 567 (IL 38)

REV. 3/24/25REV. 3/21/25

					ROADWAY		BRIDGE	BIKE PATH	ROADWAY LIGHTING		TRAFFIC SIGNALS		ROADWAY SIGNING
					IL 38 & DDI RAMPS	DEMENT ROAD	I-39	IL 38	IL 38 & DDI RAMPS	IL 38 (EAST & WEST OF INTERCHANGE) & DEMENT ROAD	DDI RAMPS & INTERCONNECT	DEMENT ROAD	IL 38 & DDI RAMPS
					0004	0006	0013	0021	0021	0021	0021	0021	0044
	CODE NUMBER	ITEM DESCRIPTION	UNIT	TOTAL QUANTITY	80% FED 20% STATE	80% FED 20% STATE	80% FED 20% STATE	80% FED 20% STATE	80% FED 20% STATE	100% CITY	80% FED 20% STATE	80% FED 10% STATE 10% CITY	80% FED 20% STATE
*	66900530	SOIL DISPOSAL ANALYSIS	EACH	5	5								
*	66901001	REGULATED SUBSTANCES PRE-CONSTRUCTION PLAN	L SUM	1	1								
*	66901003	REGULATED SUBSTANCES FINAL CONSTRUCTION REPORT	L SUM	1	1								
*	66901006	REGULATED SUBSTANCES MONITORING	CAL DA	10	10								
	67100100	MOBILIZATION	L SUM	1	1								
	70100400	TRAFFIC CONTROL AND PROTECTION, STANDARD 701431	EACH	1	1								
	70100825	TRAFFIC CONTROL AND PROTECTION, STANDARD 701456	L SUM	1	1								
	70102630	TRAFFIC CONTROL AND PROTECTION, STANDARD 701601	L SUM	1	1								
	70102635	TRAFFIC CONTROL AND PROTECTION, STANDARD 701701	L SUM	1	1								
	70102640	TRAFFIC CONTROL AND PROTECTION, STANDARD 701801	L SUM	1	1								
	70103815	TRAFFIC CONTROL SURVEILLANCE	CAL DA	50	50								
	70107025	CHANGEABLE MESSAGE SIGN	CAL DA	350	350								
	70200100	NIGHTTIME WORK ZONE LIGHTING	L SUM	1	1								
	70300150	SHORT TERM PAVEMENT MARKING REMOVAL	SQ FT	21748	21748								
	70300211	TEMPORARY PAVEMENT MARKING LETTERS AND SYMBOLS - PAINT	SQ FT	266	266								
	70300221	TEMPORARY PAVEMENT MARKING - LINE 4"- PAINT	FOOT	17002	17002								
	70300241	TEMPORARY PAVEMENT MARKING - LINE 6"- PAINT	FOOT	251	251								
	70300251	TEMPORARY PAVEMENT MARKING - LINE 8"- PAINT	FOOT	2321	2321								
	70300261	TEMPORARY PAVEMENT MARKING - LINE 12"- PAINT	FOOT	1102	1102								

* SPECIALTY ITEM

MODEL: SOQ - 8 [Sheet]
FILE NAME: N:\IDOT22\0628\CAD_Sheets\Civil\D284N98-sht-SOQ.dgn

CHRISTOPHER B. BURKE ENGINEERING, LTD.
9575 W. Higgins Road, Suite 600
Rosemont, Illinois 60018
(847) 823-0500

USER NAME = nhowelllindgren	DESIGNED -	REVISED -
	DRAWN -	REVISED -
	CHECKED -	REVISED -
PLOT DATE = 2/6/2025	DATE -	REVISED -

STATE OF ILLINOIS
DEPARTMENT OF TRANSPORTATION

IL 38/I-39 INTERCHANGE IMPROVEMENTS
SUMMARY OF QUANTITIES

SCALE: | SHEET 8 OF 19 SHEETS | STA. TO STA.

F.A.* RTE.	SECTION	COUNTY	TOTAL SHEETS	SHEET NO.
*	141-1HBR-3 & (9, 10) R-3	OGLE	508	12
		CONTRACT NO. 64N98		
	ILLINOIS	FED. AID PROJECT		

*FAI ROUTE 39 (I-39) & FAP 567 (IL 38)

REV. 3/21/25

				ROADWAY		BRIDGE	BIKE PATH	ROADWAY LIGHTING		TRAFFIC SIGNALS		ROADWAY SIGNING
				IL 38 & DDI RAMPS	DEMENT ROAD	I-39	IL 38	IL 38 & DDI RAMPS	IL 38 (EAST & WEST OF INTERCHANGE) & DEMENT ROAD	DDI RAMPS & INTERCONNECT	DEMENT ROAD	IL 38 & DDI RAMPS
				0004	0006	0013	0021	0021	0021	0021	0021	0044
CODE NUMBER	ITEM DESCRIPTION	UNIT	TOTAL QUANTITY	80% FED 20% STATE	80% FED 20% STATE	80% FED 20% STATE	80% FED 20% STATE	80% FED 20% STATE	100% CITY	80% FED 20% STATE	80% FED 10% STATE 10% CITY	80% FED 20% STATE
70300281	TEMPORARY PAVEMENT MARKING - LINE 24"- PAINT	FOOT	346	346								
70307100	TEMPORARY PAVEMENT MARKING LETTERS AND SYMBOLS - TYPE IV TAPE	SQ FT	602	602								
70307120	TEMPORARY PAVEMENT MARKING - LINE 4" - TYPE IV TAPE	FOOT	49949	49949								
70307130	TEMPORARY PAVEMENT MARKING - LINE 6" - TYPE IV TAPE	FOOT	2430	2430								
70307140	TEMPORARY PAVEMENT MARKING - LINE 8" - TYPE IV TAPE	FOOT	4057	4057								
70307160	TEMPORARY PAVEMENT MARKING - LINE 12"- TYPE IV TAPE	FOOT	1061	1061								
70307210	TEMPORARY PAVEMENT MARKING - LINE 24"- TYPE IV TAPE	FOOT	237	237								
70400100	TEMPORARY CONCRETE BARRIER	FOOT	1875	1875								
70400125	PINNING TEMPORARY CONCRETE BARRIER	EACH	543	543								
70400200	RELOCATE TEMPORARY CONCRETE BARRIER	FOOT	2575	2575								
70600251	IMPACT ATTENUATORS, TEMPORARY (NON- REDIRECTIVE, NARROW), TEST LEVEL 3	EACH	6	6								
70600352	IMPACT ATTENUATORS, RELOCATE (NON- REDIRECTIVE,NARROW), TEST LEVEL 3	EACH	8	8								
* 72000100	SIGN PANEL - TYPE 1	SQ FT	1446							207	60	1179
* 72000200	SIGN PANEL - TYPE 2	SQ FT	164									164
* 72000300	SIGN PANEL - TYPE 3	SQ FT	2010									2010
* 72400310	REMOVE SIGN PANEL - TYPE 1	SQ FT	674									674
* 72400320	REMOVE SIGN PANEL - TYPE 2	SQ FT	662									662
* 72400330	REMOVE SIGN PANEL - TYPE 3	SQ FT	984									984
* 72400710	RELOCATE SIGN PANEL - TYPE 1	SQ FT	181	98								83

* SPECIALTY ITEM

** 100% CITY

MODEL: SOQ - 9 [Sheet]
FILE NAME: N:\IDOT22\0628\CAD_Sheets\Civil\D264N98-sht-SOQ.dgn

CHRISTOPHER B. BURKE ENGINEERING, LTD.
9575 W. Higgins Road, Suite 600
Rosemont, Illinois 60018
(847) 823-0500

USER NAME = nhowelllindgren	DESIGNED -	REVISED -	
	DRAWN -	REVISED -	
	CHECKED -	REVISED -	
PLOT DATE = 2/6/2025	DATE -	REVISED -	

STATE OF ILLINOIS
DEPARTMENT OF TRANSPORTATION

IL 38/I-39 INTERCHANGE IMPROVEMENTS
SUMMARY OF QUANTITIES

SCALE: | SHEET 9 OF 19 SHEETS | STA. TO STA.

F.A.* RTE.	SECTION	COUNTY	TOTAL SHEETS	SHEET NO.
*	141-1HBR-3 & (9, 10) R-3	OGLE	508	13

CONTRACT NO. 64N98

ILLINOIS | FED. AID PROJECT

*FAI ROUTE 39 (I-39) & FAP 567 (IL 38)

REV. 3/21/25

					ROADWAY		BRIDGE	BIKE PATH	ROADWAY LIGHTING		TRAFFIC SIGNALS		ROADWAY SIGNING
					IL 38 & DDI RAMPS	DEMENT ROAD	I-39	IL 38	IL 38 & DDI RAMPS	IL 38 (EAST & WEST OF INTERCHANGE) & DEMENT ROAD	DDI RAMPS & INTERCONNECT	DEMENT ROAD	IL 38 & DDI RAMPS
					0004	0006	0013	0021	0021	0021	0021	0021	0044
	CODE NUMBER	ITEM DESCRIPTION	UNIT	TOTAL QUANTITY	80% FED 20% STATE	80% FED 20% STATE	80% FED 20% STATE	80% FED 20% STATE	80% FED 20% STATE	100% CITY	80% FED 20% STATE	80% FED 10% STATE 10% CITY	80% FED 20% STATE
*	72400730	RELOCATE SIGN PANEL - TYPE 3	SQ FT	300	300								
*	72400745	REMOVE AND RELOCATE SIGN PANEL - TYPE 3	SQ FT	198									198
*	72501000	TERMINAL MARKER - DIRECT APPLIED	EACH	4	4								
*	72700100	STRUCTURAL STEEL SIGN SUPPORT - BREAKAWAY	POUND	15063									15063
*	72800100	TELESCOPING STEEL SIGN SUPPORT	FOOT	184									184
*	73000100	WOOD SIGN SUPPORT	FOOT	1761	233								1528
*	73300100	OVERHEAD SIGN STRUCTURE - SPAN, TYPE I-A (4'-0" X 4'-6")	FOOT	177									177
*	73300200	OVERHEAD SIGN STRUCTURE - SPAN, TYPE II-A (4'-6" X 5'-3")	FOOT	121									121
*	73400200	DRILLED SHAFT CONCRETE FOUNDATIONS	CU YD	106.5									106.5
*	73500005	REMOVE OVERHEAD SIGN STRUCTURE - SPAN	EACH	3									3
*	73500300	REMOVE AND RELOCATE GROUND MOUNTED SIGN SUPPORT	EACH	4									4
*	73700100	REMOVE GROUND MOUNTED SIGN SUPPORT	EACH	24									24
*	73700200	REMOVE CONCRETE FOUNDATION - GROUND MOUNT	EACH	28									28
*	73700300	REMOVE CONCRETE FOUNDATION - OVERHEAD	EACH	6									6
*	73800005	REMOVE STRUCTURAL STEEL SUPPORT FOR OVERHEAD SIGN STRUCTURE - SPAN	EACH	6									6
*	78004635	PREFORMED PLASTIC PAVEMENT MARKING, TYPE D - STANDARD - LINE 7"	FOOT	3531	3531								
*	78004645	PREFORMED PLASTIC PAVEMENT MARKING, TYPE D - STANDARD - LINE 9"	FOOT	732	732								
*	78004655	PREFORMED PLASTIC PAVEMENT MARKING, TYPE D - STANDARD - LINE 11"	FOOT	4493	4493								
*	78004660	PREFORMED PLASTIC PAVEMENT MARKING, TYPE D - STANDARD - LINE 12"	FOOT	1227	1227								

* SPECIALTY ITEM

** 100% CITY

MODEL: SOQ - 10 [Sheet]
FILE NAME: N:\IDOT220628\CAD_Sheets\Civil\D264N98-sht-SOQ.dgn

CHRISTOPHER B. BURKE ENGINEERING, LTD.
9575 W. Higgins Road, Suite 600
Rosemont, Illinois 60018
(847) 823-0500

USER NAME = nhowelllindgren	DESIGNED -	REVISED -
	DRAWN -	REVISED -
	CHECKED -	REVISED -
PLOT DATE = 2/6/2025	DATE -	REVISED -

STATE OF ILLINOIS
DEPARTMENT OF TRANSPORTATION

IL 38/I-39 INTERCHANGE IMPROVEMENTS
SUMMARY OF QUANTITIES

SCALE: | SHEET 10 OF 19 SHEETS | STA. | TO STA.

F.A.* RTE.	SECTION	COUNTY	TOTAL SHEETS	SHEET NO.
*	141-1HBR-3 & (9, 10) R-3	OGLE	508	14

CONTRACT NO. 64N98

ILLINOIS | FED. AID PROJECT

*FAI ROUTE 39 (I-39) & FAP 567 (IL 38)

REV. 3/21/25

					ROADWAY		BRIDGE	BIKE PATH	ROADWAY LIGHTING		TRAFFIC SIGNALS		ROADWAY SIGNING
					IL 38 & DDI RAMPS	DEMENT ROAD	I-39	IL 38	IL 38 & DDI RAMPS	IL 38 (EAST & WEST OF INTERCHANGE) & DEMENT ROAD	DDI RAMPS & INTERCONNECT	DEMENT ROAD	IL 38 & DDI RAMPS
					0004	0006	0013	0021	0021	0021	0021	0021	0044
	CODE NUMBER	ITEM DESCRIPTION	UNIT	TOTAL QUANTITY	80% FED 20% STATE	80% FED 20% STATE	80% FED 20% STATE	80% FED 20% STATE	80% FED 20% STATE	100% CITY	80% FED 20% STATE	80% FED 10% STATE 10% CITY	80% FED 20% STATE
*	78004720	PREFORMED PLASTIC PAVEMENT MARKING, TYPE D - STANDARD - LINE 24"	FOOT	484	484								
*	78009000	MODIFIED URETHANE PAVEMENT MARKING - LETTERS AND SYMBOLS	SQ FT	1263	1263								
*	78009004	MODIFIED URETHANE PAVEMENT MARKING - LINE 4"	FOOT	51088	51088								
*	78009008	MODIFIED URETHANE PAVEMENT MARKING - LINE 8"	FOOT	3223	3223								
*	78009012	MODIFIED URETHANE PAVEMENT MARKING - LINE 12"	FOOT	2781	2781								
*	78011000	GROOVING FOR RECESSED PAVEMENT MARKING, LETTERS AND SYMBOLS	SQ FT	1263	1263								
*	78011025	GROOVING FOR RECESSED PAVEMENT MARKING 5"	FOOT	51088	51088								
*	78011040	GROOVING FOR RECESSED PAVEMENT MARKING 8"	FOOT	3531	3531								
*	78011045	GROOVING FOR RECESSED PAVEMENT MARKING 9"	FOOT	3223	3223								
*	78011050	GROOVING FOR RECESSED PAVEMENT MARKING 10"	FOOT	732	732								
*	78011060	GROOVING FOR RECESSED PAVEMENT MARKING 12"	FOOT	4493	4493								
*	78011065	GROOVING FOR RECESSED PAVEMENT MARKING 13"	FOOT	4008	4008								
*	78011125	GROOVING FOR RECESSED PAVEMENT MARKING 25"	FOOT	484	484								
*	78100100	RAISED REFLECTIVE PAVEMENT MARKER	EACH	263	263								
	78100200	TEMPORARY RAISED REFLECTIVE PAVEMENT MARKER	EACH	294	294								
	78300201	PAVEMENT MARKING REMOVAL - GRINDING	SQ FT	3720	3720								
	78300202	PAVEMENT MARKING REMOVAL - WATER BLASTING	SQ FT	12594	12594								
*	80400100	ELECTRIC SERVICE INSTALLATION	EACH	3					1	2			

*= SPECIALTY ITEM

MODEL: SOQ - 11 [Sheet]
FILE NAME: N:\IDOT220628\CAD_Sheets\Civil\D284N98-sht-SOQ.dgn

CHRISTOPHER B. BURKE ENGINEERING, LTD.
9575 W. Higgins Road, Suite 600
Rosemont, Illinois 60018
847 823-0500

USER NAME = nhowelllindgren	DESIGNED -	REVISED -	
	DRAWN -	REVISED -	
	CHECKED -	REVISED -	
PLOT DATE = 2/6/2025	DATE -	REVISED -	

STATE OF ILLINOIS
DEPARTMENT OF TRANSPORTATION

IL 38/I-39 INTERCHANGE IMPROVEMENTS
SUMMARY OF QUANTITIES

SCALE: | SHEET 11 OF 19 SHEETS | STA. TO STA.

F.A.* RTE.	SECTION	COUNTY	TOTAL SHEETS	SHEET NO.
*	141-1HBR-3 & (9, 10) R-3	OGLE	508	15
		CONTRACT NO. 64N98		
	ILLINOIS	FED. AID PROJECT		

*FAI ROUTE 39 (I-39) & FAP 567 (IL 38)

REV. 3/21/25

					ROADWAY		BRIDGE	BIKE PATH	ROADWAY LIGHTING		TRAFFIC SIGNALS		ROADWAY SIGNING
					IL 38 & DDI RAMPS	DEMENT ROAD	I-39	IL 38	IL 38 & DDI RAMPS	IL 38 (EAST & WEST OF INTERCHANGE) & DEMENT ROAD	DDI RAMPS & INTERCONNECT	DEMENT ROAD	IL 38 & DDI RAMPS
					0004	0006	0013	0021	0021	0021	0021	0021	0044
	CODE NUMBER	ITEM DESCRIPTION	UNIT	TOTAL QUANTITY	80% FED 20% STATE	80% FED 20% STATE	80% FED 20% STATE	80% FED 20% STATE	80% FED 20% STATE	100% CITY	80% FED 20% STATE	80% FED 10% STATE 10% CITY	80% FED 20% STATE
*	80500100	SERVICE INSTALLATION, TYPE A	EACH	3							2	1	
*	81028200	UNDERGROUND CONDUIT, GALVANIZED STEEL, 2" DIA.	FOOT	165					125	40			
*	81028210	UNDERGROUND CONDUIT, GALVANIZED STEEL, 2 1/2" DIA.	FOOT	330					330				
*	81028220	UNDERGROUND CONDUIT, GALVANIZED STEEL, 3" DIA.	FOOT	485						485			
*	81028250	UNDERGROUND CONDUIT, GALVANIZED STEEL, 5" DIA.	FOOT	165						165			
*	81028350	UNDERGROUND CONDUIT, PVC, 2" DIA.	FOOT	6159							5830	329	
*	81028360	UNDERGROUND CONDUIT, PVC, 2 1/2" DIA.	FOOT	499							353	146	
*	81028370	UNDERGROUND CONDUIT, PVC, 3" DIA.	FOOT	174							51	123	
*	81028380	UNDERGROUND CONDUIT, PVC, 3 1/2" DIA.	FOOT	258							123	135	
*	81028390	UNDERGROUND CONDUIT, PVC, 4" DIA.	FOOT	3526							3075	451	
*	81028730	UNDERGROUND CONDUIT, COILABLE NONMETALLIC CONDUIT, 1 1/4" DIA.	FOOT	8965					8965				
*	81028740	UNDERGROUND CONDUIT, COILABLE NONMETALLIC CONDUIT, 1 1/2" DIA.	FOOT	8380						8380			
*	81028750	UNDERGROUND CONDUIT, COILABLE NONMETALLIC CONDUIT, 2" DIA.	FOOT	40					40				
*	81101001	CONDUIT ATTACHED TO STRUCTURE, RIGID NON-METALLIC, 2" DIA.	FOOT	216							216		
*	81101002	CONDUIT ATTACHED TO STRUCTURE, RIGID NON-METALLIC, 4" DIA.	FOOT	432							432		
*	81200230	CONDUIT EMBEDDED IN STRUCTURE, 2" DIA., PVC	FOOT	900					900				
*	81300550	JUNCTION BOX, STAINLESS STEEL, ATTACHED TO STRUCTURE, 12" X 12" X 6"	EACH	8					8				
*	81300948	JUNCTION BOX, STAINLESS STEEL, ATTACHED TO STRUCTURE, 24" X 24" X 10"	EACH	4							4		
*	81400100	HANDHOLE	EACH	34					10	6	14	4	

* SPECIALTY ITEM

** 100% CITY

MODEL: SOQ - 12 [Sheet]
FILE NAME: N:\IDOT220628\CAD_Sheets\Civil\D284N98-sht-SOQ.dgn

CHRISTOPHER B. BURKE ENGINEERING, LTD.
9575 W. Higgins Road, Suite 600
Rosemont, Illinois 60018
(847) 823-0500

USER NAME = nhowelllindgren	DESIGNED -	REVISED -
	DRAWN -	REVISED -
	CHECKED -	REVISED -
PLOT DATE = 2/6/2025	DATE -	REVISED -

STATE OF ILLINOIS
DEPARTMENT OF TRANSPORTATION

IL 38/I-39 INTERCHANGE IMPROVEMENTS
SUMMARY OF QUANTITIES

SCALE: | SHEET 12 OF 19 SHEETS | STA. TO STA.

F.A.* RTE.	SECTION	COUNTY	TOTAL SHEETS	SHEET NO.
*	141-1HBR-3 & (9, 10) R-3	OGLE	508	16

CONTRACT NO. 64N98

ILLINOIS | FED. AID PROJECT

*FAI ROUTE 39 (I-39) & FAP 567 (IL 38)

REV. 3/21/25

	CODE NUMBER	ITEM DESCRIPTION	UNIT	TOTAL QUANTITY	ROADWAY		BRIDGE	BIKE PATH	ROADWAY LIGHTING		TRAFFIC SIGNALS		ROADWAY SIGNING
					IL 38 & DDI RAMPS	DEMENT ROAD	I-39	IL 38	IL 38 & DDI RAMPS	IL 38 (EAST & WEST OF INTERCHANGE) & DEMENT ROAD	DDI RAMPS & INTERCONNECT	DEMENT ROAD	IL 38 & DDI RAMPS
					0004	0006	0013	0021	0021	0021	0021	0021	0044
					80% FED 20% STATE	80% FED 20% STATE	80% FED 20% STATE	80% FED 20% STATE	80% FED 20% STATE	100% CITY	80% FED 20% STATE	80% FED 10% STATE 10% CITY	80% FED 20% STATE
*	81400300	DOUBLE HANDHOLE	EACH	15							12	3	
*	81702110	ELECTRIC CABLE IN CONDUIT, 600V (XLP-TYPE USE) 1/C NO. 10	FOOT	3175					3175				
*	81702130	ELECTRIC CABLE IN CONDUIT, 600V (XLP-TYPE USE) 1/C NO. 6	FOOT	115125					46915	68210			
*	81702150	ELECTRIC CABLE IN CONDUIT, 600V (XLP-TYPE USE) 1/C NO. 2	FOOT	780					540	240			
*	82110007	LUMINAIRE, LED, ROADWAY, OUTPUT DESIGNATION G	EACH	8					8				
*	82110008	LUMINAIRE, LED, ROADWAY, OUTPUT DESIGNATION H	EACH	54					45			9	
*	82500335	LIGHTING CONTROLLER, PEDESTAL MOUNTED, 240VOLT, 100AMP	EACH	2						2			
*	82500350	LIGHTING CONTROLLER, BASE MOUNTED, 240VOLT, 100AMP	EACH	1					1				
*	83008600	LIGHT POLE, ALUMINUM, 40 FT. M.H., 15 FT. MAST ARM	EACH	41					41				
*	83600200	LIGHT POLE FOUNDATION, 24" DIAMETER	FOOT	215						215			
*	83600300	LIGHT POLE FOUNDATION, 30" DIAMETER	FOOT	222					222				
*	83800205	BREAKAWAY DEVICE, TRANSFORMER BASE, 15 INCH BOLT CIRCLE	EACH	37					37				
*	84200500	REMOVAL OF LIGHTING UNIT, SALVAGE	EACH	2					2				
*	84200505	REMOVAL OF LIGHTING TOWER, SALVAGE	EACH	2					2				
*	84200804	REMOVAL OF POLE FOUNDATION	EACH	4					4				
*	84500120	REMOVAL OF ELECTRIC SERVICE INSTALLATION	EACH	1					1				
*	84500130	REMOVAL OF LIGHTING CONTROLLER FOUNDATION	EACH	1					1				
*	86000100	MASTER CONTROLLER	EACH	1								1	
*	86200300	UNINTERRUPTABLE POWER SUPPLY, EXTENDED	EACH	2							2		

* SPECIALTY ITEM

** 100% CITY

MODEL: SOQ - 13 [Sheet]
FILE NAME: N:\IDOT220628\CAD_Sheets\Civil\D264N98-sht-SOQ.dgn

CHRISTOPHER B. BURKE ENGINEERING, LTD.
9575 W. Higgins Road, Suite 600
Rosemont, Illinois 60018
(847) 823-0500

USER NAME = nhowelllindgren	DESIGNED -	REVISED -
	DRAWN -	REVISED -
	CHECKED -	REVISED -
PLOT DATE = 2/6/2025	DATE -	REVISED -

STATE OF ILLINOIS
DEPARTMENT OF TRANSPORTATION

IL 38/I-39 INTERCHANGE IMPROVEMENTS
SUMMARY OF QUANTITIES

SCALE: | SHEET 13 OF 19 SHEETS | STA. TO STA.

F.A.* RTE.	SECTION	COUNTY	TOTAL SHEETS	SHEET NO.
*	141-1HBR-3 & (9, 10) R-3	OGLE	508	17

CONTRACT NO. 64N98

ILLINOIS | FED. AID PROJECT

*FAI ROUTE 39 (I-39) & FAP 567 (IL 38)

REV. 3/21/25

					ROADWAY		BRIDGE	BIKE PATH	ROADWAY LIGHTING		TRAFFIC SIGNALS		ROADWAY SIGNING
					IL 38 & DDI RAMPS	DEMENT ROAD	I-39	IL 38	IL 38 & DDI RAMPS	IL 38 (EAST & WEST OF INTERCHANGE) & DEMENT ROAD	DDI RAMPS & INTERCONNECT	DEMENT ROAD	IL 38 & DDI RAMPS
					0004	0006	0013	0021	0021	0021	0021	0021	0044
	CODE NUMBER	ITEM DESCRIPTION	UNIT	TOTAL QUANTITY	80% FED 20% STATE	80% FED 20% STATE	80% FED 20% STATE	80% FED 20% STATE	80% FED 20% STATE	100% CITY	80% FED 20% STATE	80% FED 10% STATE 10% CITY	80% FED 20% STATE
*	86400100	TRANSCEIVER - FIBER OPTIC	EACH	3							2	1	
*	87300925	ELECTRIC CABLE IN CONDUIT, TRACER, NO. 14 1C	FOOT	5194							5194		
*	87301215	ELECTRIC CABLE IN CONDUIT, SIGNAL NO. 14 2C	FOOT	11065							8095	2970	
*	87301225	ELECTRIC CABLE IN CONDUIT, SIGNAL NO. 14 3C	FOOT	14866							11826	3040	
*	87301245	ELECTRIC CABLE IN CONDUIT, SIGNAL NO. 14 5C	FOOT	45571							39272	6299	
*	87301255	ELECTRIC CABLE IN CONDUIT, SIGNAL NO. 14 7C	FOOT	2542							102	2440	
*	87301805	ELECTRIC CABLE IN CONDUIT, SERVICE, NO. 6 2 C	FOOT	294							250	44	
*	87301900	ELECTRIC CABLE IN CONDUIT, EQUIPMENT GROUNDING CONDUCTOR, NO. 6 1C	FOOT	8421							6664	1757	
*	87500600	TRAFFIC SIGNAL POST, 10 FT.	EACH	7							1	6	
*	87501300	TRAFFIC SIGNAL POST, 17 FT.	EACH	23							18	5	
*	87700120	STEEL MAST ARM ASSEMBLY AND POLE, 16 FT.	EACH	1								1	
*	87700240	STEEL MAST ARM ASSEMBLY AND POLE, 40 FT.	EACH	1								1	
*	87700280	STEEL MAST ARM ASSEMBLY AND POLE, 48 FT.	EACH	1								1	
*	87702840	STEEL COMBINATION MAST ARM ASSEMBLY AND POLE 22 FT.	EACH	1							1		
*	87702860	STEEL COMBINATION MAST ARM ASSEMBLY AND POLE 26 FT.	EACH	1							1		
*	87702870	STEEL COMBINATION MAST ARM ASSEMBLY AND POLE 28 FT.	EACH	1							1		
*	87702880	STEEL COMBINATION MAST ARM ASSEMBLY AND POLE 30 FT.	EACH	4							4		
*	87702890	STEEL COMBINATION MAST ARM ASSEMBLY AND POLE 32 FT.	EACH	1							1		
*	87702900	STEEL COMBINATION MAST ARM ASSEMBLY AND POLE 34 FT.	EACH	2							1	1	

* SPECIALTY ITEM

** 100% CITY

MODEL: SOQ - 14 [Sheet]
FILE NAME: N:\IDOT220628\CAD_Sheets\Civil\D264N98-sht-SOQ.dgn

CHRISTOPHER B. BURKE ENGINEERING, LTD.
9575 W. Higgins Road, Suite 600
Rosemont, Illinois 60018
(847) 823-0500

USER NAME = nhowelllindgren	DESIGNED -	REVISED -
	DRAWN -	REVISED -
	CHECKED -	REVISED -
PLOT DATE = 2/6/2025	DATE -	REVISED -

STATE OF ILLINOIS
DEPARTMENT OF TRANSPORTATION

IL 38/I-39 INTERCHANGE IMPROVEMENTS
SUMMARY OF QUANTITIES

SCALE: | SHEET 14 OF 19 SHEETS | STA. | TO STA.

F.A.* RTE.	SECTION	COUNTY	TOTAL SHEETS	SHEET NO.
*	141-1HBR-3 & (9, 10) R-3	OGLE	508	18

CONTRACT NO. 64N98

ILLINOIS | FED. AID PROJECT

*FAI ROUTE 39 (I-39) & FAP 567 (IL 38)

REV. 3/21/25

					ROADWAY		BRIDGE	BIKE PATH	ROADWAY LIGHTING		TRAFFIC SIGNALS		ROADWAY SIGNING
					IL 38 & DDI RAMPS	DEMENT ROAD	I-39	IL 38	IL 38 & DDI RAMPS	IL 38 (EAST & WEST OF INTERCHANGE) & DEMENT ROAD	DDI RAMPS & INTERCONNECT	DEMENT ROAD	IL 38 & DDI RAMPS
					0004	0006	0013	0021	0021	0021	0021	0021	0044
	CODE NUMBER	ITEM DESCRIPTION	UNIT	TOTAL QUANTITY	80% FED 20% STATE	80% FED 20% STATE	80% FED 20% STATE	80% FED 20% STATE	80% FED 20% STATE	100% CITY	80% FED 20% STATE	80% FED 10% STATE 10% CITY	80% FED 20% STATE
*	87702920	STEEL COMBINATION MAST ARM ASSEMBLY AND POLE 38 FT.	EACH	1								1	
*	87702950	STEEL COMBINATION MAST ARM ASSEMBLY AND POLE 44 FT.	EACH	1								1	
*	87703020	STEEL COMBINATION MAST ARM ASSEMBLY AND POLE 58 FT.	EACH	1								1	
*	87703040	STEEL COMBINATION MAST ARM ASSEMBLY AND POLE 62 FT.	EACH	1								1	
*	87703120	STEEL COMBINATION MAST ARM ASSEMBLY AND POLE 75 FT.	EACH	1								1	
*	87800100	CONCRETE FOUNDATION, TYPE A	FOOT	90							57	33	
*	87800150	CONCRETE FOUNDATION, TYPE C	FOOT	9							6	3	
*	87800400	CONCRETE FOUNDATION, TYPE E 30-INCH DIAMETER	FOOT	42							32	10	
*	87800415	CONCRETE FOUNDATION, TYPE E 36-INCH DIAMETER	FOOT	127							66	61	
*	87800420	CONCRETE FOUNDATION, TYPE E 42-INCH DIAMETER	FOOT	45								45	
*	88040020	SIGNAL HEAD, POLYCARBONATE, LED, 1-FACE, 1-SECTION, BRACKET MOUNTED	EACH	3							3		
*	88040070	SIGNAL HEAD, POLYCARBONATE, LED, 1-FACE, 3-SECTION, BRACKET MOUNTED	EACH	24							18	6	
*	88040090	SIGNAL HEAD, POLYCARBONATE, LED, 1-FACE, 3-SECTION, MAST ARM MOUNTED	EACH	35							18	17	
*	88040110	SIGNAL HEAD, POLYCARBONATE, LED, 1-FACE, 4-SECTION, BRACKET MOUNTED	EACH	1							1		
*	88040120	SIGNAL HEAD, POLYCARBONATE, LED, 1-FACE, 4-SECTION, MAST ARM MOUNTED	EACH	4								4	
*	88040150	SIGNAL HEAD, POLYCARBONATE, LED, 1-FACE, 5-SECTION, BRACKET MOUNTED	EACH	2								2	
*	88040160	SIGNAL HEAD, POLYCARBONATE, LED, 1-FACE, 5-SECTION, MAST ARM MOUNTED	EACH	2								2	
*	88102825	PEDESTRIAN SIGNAL HEAD, POLYCARBONATE, LED, 1-FACE, BRACKET MOUNTED WITH COUNT DOWN TIMER	EACH	18							8	10	
*	88200510	TRAFFIC SIGNAL BACKPLATE, RETROREFLECTIVE	EACH	41							18	23	

* SPECIALTY ITEM

** 100% CITY

MODEL: SOQ - 15 [Sheet]
FILE NAME: N:\IDOT220628\CAD_Sheets\Civil\D284N98-sht-SOQ.dgn

CHRISTOPHER B. BURKE ENGINEERING, LTD.
9575 W. Higgins Road, Suite 600
Rosemont, Illinois 60018
(847) 823-0500

USER NAME = nhowelllindgren	DESIGNED -	REVISED -	STATE OF ILLINOIS DEPARTMENT OF TRANSPORTATION
	DRAWN -	REVISED -	
	CHECKED -	REVISED -	
PLOT DATE = 2/6/2025	DATE -	REVISED -	

IL 38/I-39 INTERCHANGE IMPROVEMENTS
SUMMARY OF QUANTITIES

SCALE: | SHEET 15 OF 19 SHEETS | STA. | TO STA.

F.A.* RTE.	SECTION	COUNTY	TOTAL SHEETS	SHEET NO.
*	141-1HBR-3 & (9, 10) R-3	OGLE	508	19

CONTRACT NO. 64N98

ILLINOIS | FED. AID PROJECT

*FAI ROUTE 39 (I-39) & FAP 567 (IL 38)

REV. 3/21/25

					ROADWAY		BRIDGE	BIKE PATH	ROADWAY LIGHTING		TRAFFIC SIGNALS		ROADWAY SIGNING
					IL 38 & DDI RAMPS	DEMENT ROAD	I-39	IL 38	IL 38 & DDI RAMPS	IL 38 (EAST & WEST OF INTERCHANGE) & DEMENT ROAD	DDI RAMPS & INTERCONNECT	DEMENT ROAD	IL 38 & DDI RAMPS
					0004	0006	0013	0021	0021	0021	0021	0021	0044
	CODE NUMBER	ITEM DESCRIPTION	UNIT	TOTAL QUANTITY	80% FED 20% STATE	80% FED 20% STATE	80% FED 20% STATE	80% FED 20% STATE	80% FED 20% STATE	100% CITY	80% FED 20% STATE	80% FED 10% STATE 10% CITY	80% FED 20% STATE
	89000100	TEMPORARY TRAFFIC SIGNAL INSTALLATION	EACH	3							2	1	
*	89502375	REMOVE EXISTING TRAFFIC SIGNAL EQUIPMENT	EACH	2							1	1	
	89502380	REMOVE EXISTING HANDHOLE	EACH	11							6	5	
	89502382	REMOVE EXISTING DOUBLE HANDHOLE	EACH	2							1	1	
	89502385	REMOVE EXISTING CONCRETE FOUNDATION	EACH	12							6	6	
	X0320050	CONSTRUCTION LAYOUT (SPECIAL)	L SUM	1	1								
*	X0322920	COMMUNICATIONS CABINET AND EQUIPMENT	EACH	1							1		
	X0325734	SLOTTED DRAIN REMOVAL	FOOT	480	480								
*	X0325815	REMOVE EXISTING CABLE	FOOT	5270					5270				
	X0326806	WASHOUT BASIN	L SUM	1	1								
	X0328022	WETLAND MITIGATION BANK CREDITS	ACRE	0.4044	0.4044								
*	X8570234	FULL-ACTUATED CONTROLLER AND TYPE SUPER R CABINET	EACH	2							1	1	
*	X1400328	AUTOMATIC TRANSFER SWITCH	EACH	1								1	
*	X1400481	LED INTERNALLY ILLUMINATED STREET NAME SIGN & VENDOR CABLE	EACH	4								4	
	X2010404	STUMP REMOVAL	EACH	15	15								
	X2100104	GEOTECHNICAL REINFORCEMENT	SQ YD	19808	19808								
	X2130010	EXPLORATION TRENCH (SPECIAL)	FOOT	40	40								
*	X4240800	DETECTABLE WARNINGS (SPECIAL)	SQ FT	411				411					
	X4400110	TEMPORARY PAVEMENT REMOVAL	SQ YD	12635	12635								

* SPECIALTY ITEM

** 100% CITY

MODEL: SOQ - 16 [Sheet]
FILE NAME: N:\IDOT\22062B\CAD_Sheets\Civil\D284N98-sht-SOQ.dgn

CHRISTOPHER B. BURKE ENGINEERING, LTD.
9575 W. Higgins Road, Suite 600
Rosemont, Illinois 60018
(847) 823-0500

USER NAME = nhowellindgren	DESIGNED -	REVISED -	
	DRAWN -	REVISED -	
	CHECKED -	REVISED -	
PLOT DATE = 2/6/2025	DATE -	REVISED -	

STATE OF ILLINOIS
DEPARTMENT OF TRANSPORTATION

IL 38/I-39 INTERCHANGE IMPROVEMENTS
SUMMARY OF QUANTITIES

SCALE: SHEET 16 OF 19 SHEETS STA. TO STA.

F.A.* RTE.	SECTION	COUNTY	TOTAL SHEETS	SHEET NO.
*	141-1 HBR-3 & (9, 10) R-3	OGLE	508	20

CONTRACT NO. 64N98

ILLINOIS | FED. AID PROJECT

*FAI ROUTE 39 (I-39) & FAP 567 (IL 38)

REV. 3/21/25

				ROADWAY		BRIDGE	BIKE PATH	ROADWAY LIGHTING		TRAFFIC SIGNALS		ROADWAY SIGNING
				IL 38 & DDI RAMPS	DEMENT ROAD	I-39	IL 38	IL 38 & DDI RAMPS	IL 38 (EAST & WEST OF INTERCHANGE) & DEMENT ROAD	DDI RAMPS & INTERCONNECT	DEMENT ROAD	IL 38 & DDI RAMPS
				0004	0006	0013	0021	0021	0021	0021	0021	0044
CODE NUMBER	ITEM DESCRIPTION	UNIT	TOTAL QUANTITY	80% FED 20% STATE	80% FED 20% STATE	80% FED 20% STATE	80% FED 20% STATE	80% FED 20% STATE	100% CITY	80% FED 20% STATE	80% FED 10% STATE 10% CITY	80% FED 20% STATE
X4402805	ISLAND REMOVAL	SQ FT	632	632								
X4404264	SHOULDER REMOVAL AND REPLACEMENT (SPECIAL)	FOOT	114	114								
X4421763	CLASS D PATCHES, TYPE II, 10 INCH (SPECIAL)	SQ YD	54	54								
X5021507	DEWATERING	L SUM	1	1								
X5067501	BRIDGE CLEANING AND PAINTING WARRANTY NUMBER 1	L SUM	1	1								
X5080530	BAR TERMINATORS	EACH	516			516						
X5110308	SLOPE WALL CRACK SEALING	FOOT	616			616						
X5427602	REMOVE EXISTING FLARED END SECTION	EACH	12	12								
X6012005	PIPE DRAINS 12" (SPECIAL)	FOOT	210	210								
X6024250	INLETS, SPECIAL, NO. 5	EACH	4	4								
X6026057	SANITARY MANHOLES TO BE RECONSTRUCTED WITH NEW TYPE 1 FRAME, CLOSED LID	EACH	1	1								
X6050065	REMOVING INLETS (SPECIAL)	EACH	9	9								
X6060714	CONCRETE MEDIAN (SPECIAL)	SQ FT	1253	1253								
X6100230	TYPE F INLET BOX, STANDARD 610001 (SPECIAL)	EACH	4	4								
X6350108	FLEXIBLE DELINEATORS	EACH	400	400								
X6370048	CONCRETE BARRIER BASE (SPECIAL)	FOOT	819	819								
X6370050	CONCRETE BARRIER WALL (SPECIAL)	FOOT	819	819								
X6640104	FENCE REMOVAL	FOOT	757	757								
X6700410	ENGINEER'S FIELD OFFICE, TYPE A (SPECIAL)	CAL MO	30	30								
X7010805	TRAFFIC CONTROL AND PROTECTION, STANDARD 701401 (SPECIAL)	L SUM	1	1								

* SPECIALTY ITEM

** 100% CITY

MODEL: SOQ - 17 [Sheet]
FILE NAME: N:\IDOT220628\CAD_Sheets\Civil\D264N98-sht-SOQ.dgn

CHRISTOPHER B. BURKE ENGINEERING, LTD.
9575 W. Higgins Road, Suite 600
Rosemont, Illinois 60018
(847) 823-0500

USER NAME = nhowelllindgren	DESIGNED -	REVISED -	
	DRAWN -	REVISED -	
	CHECKED -	REVISED -	
PLOT DATE = 2/6/2025	DATE -	REVISED -	

STATE OF ILLINOIS
DEPARTMENT OF TRANSPORTATION

IL 38/I-39 INTERCHANGE IMPROVEMENTS
SUMMARY OF QUANTITIES

SCALE: | SHEET 17 OF 19 SHEETS | STA. | TO STA.

F.A.* RTE.	SECTION	COUNTY	TOTAL SHEETS	SHEET NO.
*	141-1HBR-3 & (9, 10) R-3	OGLE	508	21

CONTRACT NO. 64N98

ILLINOIS | FED. AID PROJECT

*FAI ROUTE 39 (I-39) & FAP 567 (IL 38)

REV. 4/1/25 REV. 3/21/25

					ROADWAY		BRIDGE	BIKE PATH	ROADWAY LIGHTING		TRAFFIC SIGNALS		ROADWAY SIGNING
					IL 38 & DDI RAMPS	DEMENT ROAD	I-39	IL 38	IL 38 & DDI RAMPS	IL 38 (EAST & WEST OF INTERCHANGE) & DEMENT ROAD	DDI RAMPS & INTERCONNECT	DEMENT ROAD	IL 38 & DDI RAMPS
					0004	0006	0013	0021	0021	0021	0021	0021	0044
	CODE NUMBER	ITEM DESCRIPTION	UNIT	TOTAL QUANTITY	80% FED 20% STATE	80% FED 20% STATE	80% FED 20% STATE	80% FED 20% STATE	80% FED 20% STATE	100% CITY	80% FED 20% STATE	80% FED 10% STATE 10% CITY	80% FED 20% STATE
*	X7200075	REMOVE AND REINSTALL SIGN PANEL	SQ FT	60									60
*	X7820007	GUARDRAIL REFLECTORS, TYPE C (SPECIAL)	EACH	268	268								
*	X8000003	MAINTENANCE OF LIGHTING SYSTEM	CAL MO	12					12				
*	X8110105	REMOVE CONDUIT ATTACHED TO STRUCTURE	FOOT	255					255				
*	X8130125	REMOVE EXISTING JUNCTION BOX	EACH	2					2				
*	X8250091	COMBINATION LIGHTING CONTROLLER	EACH	2					2				
*	X8250500	LIGHTING UNIT COMPLETE (SPECIAL)	EACH	43						43			
	X8410102	TEMPORARY LIGHTING SYSTEM	L SUM	1					1				
	X8410103	REMOVE TEMPORARY LIGHTING SYSTEM	L SUM	1					1				
*	X8710024	FIBER OPTIC CABLE IN CONDUIT, NO. 62.5/125, MM12F SM24F	FOOT	5252							5252		
*	X8760200	ACCESSIBLE PEDESTRIAN SIGNALS	EACH	18							8	10	
*	X8891202	WIDE AREA VIDEO VEHICLE DETECTION SYSTEM COMPLETE	EACH	3							2	1	
*	X8950075	REMOVE EXISTING LIGHTING CONTROLLER AND SALVAGE	EACH	1					1				
	X0328504	CONCRETE BOLLARDS	EACH	5	5								
	Z0001899	JACK AND REMOVE EXISTING BEARINGS	EACH	24			24						
	Z0004002	BOLLARDS	EACH	9	9								
	Z0007101	CONTAINMENT AND DISPOSAL OF LEAD PAINT CLEANING RESIDUES NO. 1	L SUM	1			1						
	Z0010501	CLEANING AND PAINTING STEEL BRIDGE NO. 1	L SUM	1			1						
	Z0012754	STRUCTURAL REPAIR OF CONCRETE (DEPTH EQUAL TO OR LESS THAN 5 INCHES)	SQ FT	379	1		378						

* SPECIALTY ITEM

** 100% CITY

MODEL: SOQ - 18 [Sheet]
FILE NAME: N:\IDOT\22062B\CAD_Sheets\Civil\D284N99-sht-SOQ.dgn

CHRISTOPHER B. BURKE ENGINEERING, LTD.
9575 W. Higgins Road, Suite 600
Rosemont, Illinois 60018
(847) 823-0500

USER NAME = nhowelllindgren	DESIGNED -	REVISED -	
	DRAWN -	REVISED -	
	CHECKED -	REVISED -	
PLOT DATE = 2/6/2025	DATE -	REVISED -	

STATE OF ILLINOIS
DEPARTMENT OF TRANSPORTATION

IL 38/I-39 INTERCHANGE IMPROVEMENTS
SUMMARY OF QUANTITIES

SCALE: SHEET 18 OF 19 SHEETS STA. TO STA.

F.A.* RTE.	SECTION	COUNTY	TOTAL SHEETS	SHEET NO.
*	141-1 HBR-3 & (9, 10) R-3	OGLE	508	22

CONTRACT NO. 64N98

ILLINOIS | FED. AID PROJECT

*FAI ROUTE 39 (I-39) & FAP 567 (IL 38)

REV. 3/24/25 REV. 3/21/25

					ROADWAY		BRIDGE	BIKE PATH	ROADWAY LIGHTING		TRAFFIC SIGNALS		ROADWAY SIGNING
					IL 38 & DDI RAMPS	DEMENT ROAD	I-39	IL 38	IL 38 & DDI RAMPS	IL 38 (EAST & WEST OF INTERCHANGE) & DEMENT ROAD	DDI RAMPS & INTERCONNECT	DEMENT ROAD	IL 38 & DDI RAMPS
					0004	0006	0013	0021	0021	0021	0021	0021	0044
	CODE NUMBER	ITEM DESCRIPTION	UNIT	TOTAL QUANTITY	80% FED 20% STATE	80% FED 20% STATE	80% FED 20% STATE	80% FED 20% STATE	80% FED 20% STATE	100% CITY	80% FED 20% STATE	80% FED 10% STATE 10% CITY	80% FED 20% STATE
	Z0012755	STRUCTURAL REPAIR OF CONCRETE (DEPTH GREATER THAN 5 INCHES)	SQ FT	15			15						
	Z0013797	STABILIZED CONSTRUCTION ENTRANCE	SQ YD	400	400								
	Z0018911	DRILL AND GROUT #6 TIE BARS	EACH	927	927								
	Z0033056	OPTIMIZE TRAFFIC SIGNAL SYSTEM	EACH	1							1		
*	Z0054500	ROCK FILL	TON	143	143								
	Z0062456	TEMPORARY PAVEMENT	SQ YD	12860	12860								
	Z0065740	SLOTTED DRAIN 12" WITH VARIABLE SLOT	FOOT	480	480								
	Z0073345	SLEEPER SLAB	FOOT	655	655								
Ø	Z0076600	TRAINEES	HOUR	2000	2000								
Δ	Z0073510	TEMPORARY TRAFFIC SIGNAL TIMING	EACH	24							16	8	
Ø	Z0076604	TRAINEES - TRAINING PROGRAM GRADUATE	HOUR	2000	2000								

* SPECIALTY ITEM

** 100% CITY

Ø 0042

MODEL: SOQ - 19 [Sheet]
FILE NAME: N:\IDOT\22062R\CAD_Sheets\Civil\D284N98-sht-SOQ.dgn

CHRISTOPHER B. BURKE ENGINEERING, LTD.
9575 W. Higgins Road, Suite 600
Rosemont, Illinois 60018
(847) 823-0500

USER NAME = nhowellindgren	DESIGNED -	REVISED -	
	DRAWN -	REVISED -	
	CHECKED -	REVISED -	
PLOT DATE = 2/6/2025	DATE -	REVISED -	

STATE OF ILLINOIS
DEPARTMENT OF TRANSPORTATION

IL 38/I-39 INTERCHANGE IMPROVEMENTS
SUMMARY OF QUANTITIES

SCALE: SHEET 19 OF 19 SHEETS STA. TO STA.

F.A.* RTE.	SECTION	COUNTY	TOTAL SHEETS	SHEET NO.
*	141-1 HBR-3 & (9, 10) R-3	OGLE	508	23

CONTRACT NO. 64N98

ILLINOIS FED. AID PROJECT

*FAI ROUTE 39 (I-39) & FAP 567 (IL38)

REV. 3/24/25 REV. 3/21/25 REV. 3/6/25

IL 38 MAINLINE	CUT (SQ FT)	TOPSOIL EXCAVATION AND PLACEMENT (SQ FT)	FILL (SQ FT)	CUT VOLUME (CU YD)	EXCAVATION TO BE USED IN EMBANKMENT ADJUSTED FOR SHRINKAGE (15% SHRINKAGE FACTOR) (CU YD)	TOPSOIL EXCAVATION AND PLACEMENT VOLUME (CU YD)	FILL VOLUME (CU YD)	EARTHWORK BALANCE ("+" = WASTE, "-" = SHORTAGE) (CU YD)
638+50.00	0.0	0.0	0.0	0.0	0.0	0.0	0.0	0.0
639+00.00	0.0	0.0	0.0	0.0	0.0	0.0	0.0	0.0
639+50.00	0.0	0.0	0.0	0.0	0.0	0.0	0.0	0.0
640+00.00	0.0	0.0	0.0	0.0	0.0	0.0	0.0	0.0
640+50.00	0.0	0.0	0.0	0.0	0.0	0.0	0.0	0.0
641+00.00	0.0	0.0	0.0	0.0	0.0	0.0	0.0	0.0
641+50.00	0.0	0.0	0.0	0.0	0.0	0.0	0.0	0.0
642+00.00	0.0	0.0	0.0	0.0	0.0	0.0	0.0	0.0
642+50.00	0.0	0.0	0.0	0.0	0.0	0.0	0.0	0.0
643+00.00	0.0	0.0	0.0	0.0	0.0	0.0	0.0	0.0
643+50.00	0.0	0.0	0.0	0.0	0.0	0.0	0.0	0.0
644+00.00	0.0	0.0	0.0	0.0	0.0	0.0	0.0	0.0
644+50.00	0.0	0.0	0.0	0.0	0.0	0.0	0.0	0.0
645+00.00	0.0	0.0	0.0	0.0	0.0	0.0	0.0	0.0
645+50.00	0.0	0.0	0.0	0.0	0.0	0.0	0.0	0.0
646+00.00	0.0	0.0	0.0	0.0	0.0	0.0	0.0	0.0
646+50.00	0.0	0.0	0.0	0.0	0.0	0.0	0.0	0.0
647+00.00	0.0	0.0	0.0	0.0	0.0	0.0	0.0	0.0
647+50.00	0.0	0.0	0.0	0.0	0.0	0.0	0.0	0.0
648+00.00	0.0	0.0	0.0	0.0	0.0	0.0	0.0	0.0
648+50.00	0.0	0.0	0.0	0.0	0.0	0.0	0.0	0.0
649+00.00	0.0	0.0	0.0	0.0	0.0	0.0	0.0	0.0
649+50.00	0.0	0.0	0.0	0.0	0.0	0.0	0.0	0.0
650+00.00	0.0	0.0	0.0	0.0	0.0	0.0	0.0	0.0
650+50.00	0.0	0.0	0.0	0.0	0.0	0.0	0.0	0.0
651+00.00	0.0	0.0	0.0	0.0	0.0	0.0	0.0	0.0
651+50.00	0.0	0.0	0.0	0.0	0.0	0.0	0.0	0.0
652+00.00	0.0	0.0	0.0	0.0	0.0	0.0	0.0	0.0
652+50.00	0.0	0.0	54.0	0.0	0.0	0.0	50.0	-50.0
653+00.00	4.6	0.0	49.3	4.2	3.6	0.0	95.6	-92.0
653+50.00	4.5	0.0	75.1	8.3	7.1	0.0	115.1	-108.1
654+00.00	8.6	84.1	205.5	12.1	10.3	77.9	259.8	-249.5
654+50.00	19.1	148.3	742.3	25.6	21.8	215.1	877.5	-855.7
655+00.00	30.3	167.5	1093.5	45.7	38.8	292.4	1699.7	-1660.9
655+50.00	79.7	188.0	1322.6	101.9	86.6	329.2	2237.1	-2150.5
656+00.00	0.0	147.1	1157.7	73.8	62.7	310.2	2296.6	-2233.8
656+50.00	0.0	142.5	1097.2	0.0	0.0	268.1	2087.8	-2087.8
657+00.00	0.0	128.2	829.4	0.0	0.0	250.6	1783.8	-1783.8
657+50.00	0.0	107.2	364.0	0.0	0.0	217.9	1104.9	-1104.9
658+00.00	0.0	57.4	0.0	0.0	0.0	152.4	337.0	-337.0
658+50.00	0.0	64.3	38.1	0.0	0.0	112.7	35.3	-35.3

IL 38 MAINLINE	CUT (SQ FT)	TOPSOIL EXCAVATION AND PLACEMENT (SQ FT)	FILL (SQ FT)	CUT VOLUME (CU YD)	EXCAVATION TO BE USED IN EMBANKMENT ADJUSTED FOR SHRINKAGE (15% SHRINKAGE FACTOR) (CU YD)	TOPSOIL EXCAVATION AND PLACEMENT VOLUME (CU YD)	FILL VOLUME (CU YD)	EARTHWORK BALANCE ("+" = WASTE, "-" = SHORTAGE) (CU YD)
659+00.00	0.0	164.2	574.4	0.0	0.0	211.5	567.1	-567.1
659+50.00	0.0	154.7	737.4	0.0	0.0	295.2	1214.5	-1214.5
660+00.00	0.0	143.4	1078.9	0.0	0.0	276.0	1681.7	-1681.7
660+50.00	0.0	125.7	1145.1	0.0	0.0	249.1	2059.2	-2059.2
661+00.00	0.0	108.1	793.5	0.0	0.0	216.4	1794.9	-1794.9
661+50.00	0.0	147.3	835.5	0.0	0.0	236.4	1508.3	-1508.3
662+00.00	0.0	140.1	344.8	0.0	0.0	266.0	1092.9	-1092.9
662+50.00	0.0	23.1	24.4	0.0	0.0	151.1	341.9	-341.9
663+00.00	0.0	9.0	7.3	0.0	0.0	29.7	29.4	-29.4
663+50.00	0.0	7.9	5.7	0.0	0.0	15.6	12.0	-12.0
664+00.00	0.0	3.0	0.0	0.0	0.0	10.0	5.3	-5.3
666+50.00	0.0	3.1	0.0	0.0	0.0	3.1	0.0	0.0
667+00.00	0.0	8.7	5.0	0.0	0.0	10.8	4.6	-4.6
667+50.00	0.0	10.4	6.7	0.0	0.0	17.6	10.8	-10.8
668+00.00	0.0	29.3	31.8	0.0	0.0	36.8	35.6	-35.6
668+50.00	0.0	142.2	581.0	0.0	0.0	158.8	567.4	-567.4
669+00.00	0.0	148.3	953.8	0.0	0.0	268.9	1421.1	-1421.1
669+50.00	0.0	149.9	1094.8	0.0	0.0	276.0	1896.8	-1896.8
670+00.00	0.0	145.0	1058.7	0.0	0.0	273.0	1993.9	-1993.9
670+50.00	0.0	132.9	882.3	0.0	0.0	257.3	1797.2	-1797.2
671+00.00	0.0	113.6	522.6	0.0	0.0	228.2	1300.8	-1300.8
671+50.00	0.0	142.0	535.2	0.0	0.0	236.6	979.4	-979.4
672+00.00	0.0	0.0	0.0	0.0	0.0	131.4	495.5	-495.5
672+50.00	0.0	25.4	22.1	0.0	0.0	23.5	20.5	-20.5
673+00.00	0.0	82.7	552.3	0.0	0.0	100.0	531.9	-531.9
673+50.00	6.1	127.9	858.1	5.7	4.8	194.9	1305.9	-1301.1
674+00.00	8.3	132.7	876.2	13.4	11.4	241.2	1605.8	-1594.4
674+50.00	32.8	145.0	859.6	38.1	32.4	257.1	1607.1	-1574.8
675+00.00	27.8	139.3	670.6	56.1	47.7	263.2	1416.8	-1369.1
675+50.00	17.6	127.5	623.7	42.1	35.7	247.0	1198.4	-1162.6
676+00.00	21.4	112.7	431.5	36.1	30.7	222.4	977.0	-946.3
676+50.00	11.8	93.1	269.4	30.7	26.1	190.5	648.9	-622.8
677+00.00	10.2	73.2	211.4	20.3	17.3	153.9	445.1	-427.9
677+50.00	10.2	56.9	177.6	18.8	16.0	120.5	360.2	-344.2
678+00.00	10.2	46.4	154.5	18.8	16.0	95.6	307.5	-291.5
678+50.00	0.0	32.1	133.5	9.4	8.0	72.6	266.6	-258.6
679+00.00	0.0	40.9	173.4	0.0	0.0	67.6	284.1	-284.1
679+50.00	0.0	0.0	0.0	0.0	0.0	37.9	160.5	-160.5
680+00.00	0.0	0.0	0.0	0.0	0.0	0.0	0.0	0.0
680+50.00	0.0	0.0	0.0	0.0	0.0	0.0	0.0	0.0
681+00.00	0.0	0.0	0.0	0.0	0.0	0.0	0.0	0.0
IL 39/ I-39 PRE-STAGE SUBTOTALS				562	477	8,370	44,927	-44,450

MODEL: EW Schedule1 [Sheet]
FILE NAME: N:\IDOT\220628\CAD_Sheets\Civil\D2664N98-sht-schedules.dgn

CHRISTOPHER B. BURKE ENGINEERING, LTD.
9575 W. Higgins Road, Suite 600
Rosemont, Illinois 60018
(847) 823-0500

USER NAME = nhowelllindgren	DESIGNED -	REVISED -	
	DRAWN -	REVISED -	
	CHECKED -	REVISED -	
PLOT DATE = 2/6/2025	DATE -	REVISED -	

STATE OF ILLINOIS
DEPARTMENT OF TRANSPORTATION

IL 38/I-39 INTERCHANGE IMPROVEMENTS
SCHEDULE OF QUANTITIES

SCALE: | SHEET 1 OF 22 SHEETS | STA. TO STA.

F.A.* RTE.	SECTION	COUNTY	TOTAL SHEETS	SHEET NO.
*	141-1HBR-3 & (9, 10) R-3	OGLE	508	24
		CONTRACT NO. 64N98		
	ILLINOIS	FED. AID PROJECT		

*FAI ROUTE 39 (I-39) & FAP 567 (IL 38)

IL 38 MAINLINE	CUT (SQ FT)	TOPSOIL EXCAVATION AND PLACEMENT (SQ FT)	FILL (SQ FT)	CUT VOLUME (CU YD)	EXCAVATION TO BE USED IN EMBANKMENT ADJUSTED FOR SHRINKAGE (15% SHRINKAGE FACTOR) (CU YD)	TOPSOIL EXCAVATION AND PLACEMENT VOLUME (CU YD)	FILL VOLUME (CU YD)	EARTHWORK BALANCE ("+" = WASTE, "-" = SHORTAGE) (CU YD)
638+50.00	11.7	28.1	16.0	0.0	0.0	0.0	0.0	0.0
639+00.00	8.9	33.6	37.2	19.0	16.2	57.1	49.2	-33.0
639+50.00	5.7	33.8	27.5	13.5	11.5	62.4	59.9	-48.4
640+00.00	14.3	33.8	13.5	18.5	15.7	62.5	37.9	-22.2
640+50.00	15.2	33.8	10.8	27.3	23.2	62.5	22.5	0.8
641+00.00	23.5	33.8	9.4	35.8	30.5	62.5	18.7	11.8
641+50.00	18.0	33.7	9.6	38.4	32.7	62.5	17.6	15.1
642+00.00	15.2	33.9	11.9	30.7	26.1	62.5	19.9	6.2
642+50.00	12.5	34.5	12.7	25.6	21.8	63.3	22.7	-1.0
643+00.00	9.5	35.6	12.6	20.4	17.3	64.9	23.3	-6.0
643+50.00	13.9	36.6	11.0	21.6	18.4	66.8	21.8	-3.4
644+00.00	14.9	37.4	14.4	26.6	22.6	68.5	23.5	-0.9
644+50.00	18.6	37.6	17.7	31.0	26.3	69.4	29.7	-3.4
645+00.00	26.4	37.6	18.4	41.7	35.4	69.6	33.4	2.0
645+50.00	20.7	37.6	21.6	43.6	37.0	69.6	37.0	0.0
646+00.00	18.5	37.5	20.9	36.3	30.8	69.5	39.3	-8.5
646+50.00	17.3	37.6	23.4	33.1	28.2	69.5	41.0	-12.8
647+00.00	16.9	37.6	26.5	31.7	26.9	69.6	48.2	19.3
647+50.00	11.6	37.6	31.6	26.4	22.4	69.6	53.8	-31.4
648+00.00	12.7	37.6	27.1	22.5	19.1	69.5	54.3	-35.2
648+50.00	6.5	37.5	24.9	17.7	15.0	69.4	48.1	-33.0
649+00.00	2.5	37.5	27.1	8.3	7.1	69.4	48.1	-41.0
649+50.00	0.8	37.6	20.8	3.1	2.6	69.4	44.3	-41.7
650+00.00	0.6	37.6	19.2	1.3	1.1	69.6	37.0	-35.9
650+50.00	0.8	37.6	30.4	1.2	1.0	69.6	45.9	-44.9
651+00.00	0.0	39.0	48.7	0.7	0.6	70.9	73.2	-72.6
651+50.00	0.0	39.0	77.6	0.0	0.0	72.2	116.9	-116.9
652+00.00	0.0	36.4	115.7	0.0	0.0	69.8	179.0	-179.0
652+50.00	146.8	16.0	25.0	135.9	115.5	48.5	130.3	-14.7
653+00.00	168.4	16.0	13.0	291.8	248.0	29.6	35.1	212.9
653+50.00	158.1	17.3	15.0	302.3	256.9	30.8	25.9	231.0
654+00.00	137.9	4.3	10.0	274.0	232.9	20.0	23.1	209.8
654+50.00	189.5	20.3	13.0	303.1	257.6	22.8	21.3	236.3
655+00.00	209.5	27.8	15.7	369.4	314.0	44.5	26.5	287.5
655+50.00	294.5	30.3	14.5	466.7	396.7	53.8	27.9	368.8
656+00.00	219.2	34.4	23.4	475.6	404.3	59.9	35.1	369.2
656+50.00	181.5	32.6	31.2	371.0	315.3	62.0	50.6	264.8
657+00.00	165.1	28.9	46.1	320.8	272.7	56.9	71.5	201.2
657+50.00	151.0	22.6	25.5	292.6	248.7	47.6	66.3	182.5
658+00.00	9.0	14.8	76.5	148.1	125.9	34.5	94.4	31.5
658+50.00	0.0	0.0	110.8	8.3	7.0	13.7	173.3	-166.3

IL 38 MAINLINE	CUT (SQ FT)	TOPSOIL EXCAVATION AND PLACEMENT (SQ FT)	FILL (SQ FT)	CUT VOLUME (CU YD)	EXCAVATION TO BE USED IN EMBANKMENT ADJUSTED FOR SHRINKAGE (15% SHRINKAGE FACTOR) (CU YD)	TOPSOIL EXCAVATION AND PLACEMENT VOLUME (CU YD)	FILL VOLUME (CU YD)	EARTHWORK BALANCE ("+" = WASTE, "-" = SHORTAGE) (CU YD)
659+00.00	126.2	20.4	32.5	116.8	99.3	18.8	132.6	-33.4
659+50.00	98.9	37.1	120.8	208.3	177.1	53.1	141.9	35.1
660+00.00	93.4	31.9	70.3	178.0	151.3	63.8	176.9	-25.7
660+50.00	91.4	27.0	61.5	171.0	145.4	54.4	122.0	23.3
661+00.00	98.0	24.7	68.1	175.3	149.0	47.8	120.0	29.0
661+50.00	112.7	22.9	64.7	195.1	165.8	44.0	122.9	42.9
662+00.00	127.0	25.2	84.1	221.9	188.6	44.5	137.7	50.9
662+50.00	131.9	24.4	72.6	239.7	203.7	45.8	145.0	58.7
663+00.00	133.0	21.1	72.5	245.3	208.5	42.0	134.3	74.2
663+50.00	131.0	13.7	36.6	244.4	207.8	32.2	101.0	106.8
664+00.00	6.0	14.9	54.7	126.8	107.8	26.4	84.4	23.3
666+50.00	5.5	15.9	58.8	5.5	4.6	15.9	58.8	-54.1
667+00.00	101.0	17.2	65.0	98.5	83.7	30.6	114.5	-30.8
667+50.00	111.1	15.5	60.5	196.3	166.9	30.2	116.2	50.7
668+00.00	110.5	23.7	77.4	205.2	174.4	36.3	127.6	46.8
668+50.00	106.6	28.6	83.8	201.0	170.8	48.3	149.2	21.7
669+00.00	91.6	38.0	115.6	183.5	156.0	61.6	184.6	-28.6
669+50.00	71.2	40.2	119.3	160.7	128.1	72.4	217.5	-89.4
670+00.00	55.7	50.8	159.1	117.5	99.8	84.2	257.8	-157.9
670+50.00	54.2	39.5	125.5	101.7	86.5	83.5	263.5	-177.0
671+00.00	58.6	29.8	86.9	104.4	88.7	64.1	196.6	-107.9
671+50.00	103.6	39.6	99.4	150.1	127.6	64.2	172.5	-44.9
672+00.00	261.0	0.0	46.6	337.5	286.9	36.6	135.1	151.8
672+50.00	165.2	14.1	55.8	394.6	335.4	13.0	94.8	240.6
673+00.00	118.9	18.3	23.3	263.0	223.5	30.0	73.2	150.3
673+50.00	97.8	30.1	64.2	200.6	170.5	44.8	81.0	89.5
674+00.00	114.0	33.3	46.5	196.1	166.7	58.7	102.5	64.2
674+50.00	144.5	35.3	44.1	239.3	203.4	63.5	83.8	119.5
675+00.00	183.9	35.0	39.5	304.0	258.4	65.1	77.4	181.0
675+50.00	129.3	31.0	35.9	290.0	246.5	61.1	69.7	176.7
676+00.00	119.9	22.1	16.9	230.7	196.1	49.2	48.8	147.2
676+50.00	103.1	15.1	8.8	206.4	175.5	34.4	23.8	151.7
677+00.00	105.6	12.5	13.0	193.2	164.2	25.5	20.2	144.0
677+50.00	112.9	11.5	17.1	202.3	171.9	22.2	27.9	144.1
678+00.00	58.4	10.7	0.0	158.6	134.8	20.5	15.8	118.9
678+50.00	54.6	10.8	0.0	104.6	88.9	19.8	0.0	88.9
679+00.00	48.8	0.0	0.0	95.7	81.4	10.0	0.0	81.4
679+50.00	24.2	21.4	39.6	67.6	57.5	19.8	36.6	20.8
680+00.00	0.0	21.4	28.6	22.4	19.1	39.6	63.1	-44.0
680+50.00	0.0	21.5	18.3	0.0	0.0	39.7	43.4	-43.4
681+00.00	0.0	23.7	18.5	0.0	0.0	41.8	34.1	-34.1
IL 39/ I-39 FINAL-STAGES SUBTOTALS				11,479	9,758	4,097	6,335	3,423

MODEL: EW Schedule3 [Sheet]
FILE NAME: N:\IDOT22\0628\CAD_Sheets\Civil\D264N98-sht-schedules.dgn

CHRISTOPHER B. BURKE ENGINEERING, LTD.
9575 W. Higgins Road, Suite 600
Rosemont, Illinois 60018
(847) 823-0500

USER NAME = nhowelllindgren	DESIGNED -	REVISED -	
	DRAWN -	REVISED -	
	CHECKED -	REVISED -	
PLOT DATE = 2/6/2025	DATE -	REVISED -	

STATE OF ILLINOIS
DEPARTMENT OF TRANSPORTATION

IL 38/I-39 INTERCHANGE IMPROVEMENTS
SCHEDULE OF QUANTITIES

SCALE: | SHEET 2 OF 22 SHEETS | STA. TO STA.

F.A.* RTE.	SECTION	COUNTY	TOTAL SHEETS	SHEET NO.
*	141-1HBR-3 & (9, 10) R-3	OGLE	508	25

CONTRACT NO. 64N98

ILLINOIS | FED. AID PROJECT

*FAI ROUTE 39 (I-39) & FAP 567 (IL 38)

I-39 NW EXIT RAMP	CUT (SQ FT)	TOPSOIL EXCAVATION AND PLACEMENT (SQ FT)	FILL (SQ FT)	CUT VOLUME (CU YD)	EXCAVATION TO BE USED IN EMBANKMENT ADJUSTED FOR SHRINKAGE (15% SHRINKAGE FACTOR) (CU YD)	TOPSOIL EXCAVATION AND PLACEMENT VOLUME (CU YD)	FILL VOLUME (CU YD)	EARTHWORK BALANCE ("+" = WASTE, "-" = SHORTAGE) (CU YD)
55+00.00	0.0	0.0	0.0	0.0	0.0	0.0	0.0	0.0
55+50.00	4.0	29.5	23.0	3.7	3.1	27.3	21.3	-18.1
56+00.00	2.3	19.0	10.2	5.8	5.0	44.9	30.7	-25.7
56+50.00	0.5	21.7	14.5	2.6	2.2	37.7	22.8	-20.6
57+00.00	0.9	27.9	21.1	1.3	1.1	45.9	32.9	-31.8
57+50.00	1.0	22.5	15.0	1.8	1.5	46.6	33.4	-31.9
58+00.00	1.2	26.4	19.4	2.1	1.7	45.2	31.8	-30.1
58+50.00	1.6	48.4	49.9	2.6	2.2	69.2	64.1	-61.9
59+00.00	1.0	43.6	55.2	2.4	2.0	85.1	97.3	-95.2
I-39 NW EXIT RAMP PRE-STAGE SUBTOTALS				23	19	402	335	-316

I-39 NW EXIT RAMP	CUT (SQ FT)	TOPSOIL EXCAVATION AND PLACEMENT (SQ FT)	FILL (SQ FT)	CUT VOLUME (CU YD)	EXCAVATION TO BE USED IN EMBANKMENT ADJUSTED FOR SHRINKAGE (15% SHRINKAGE FACTOR) (CU YD)	TOPSOIL EXCAVATION AND PLACEMENT VOLUME (CU YD)	FILL VOLUME (CU YD)	EARTHWORK BALANCE ("+" = WASTE, "-" = SHORTAGE) (CU YD)
55+00.00	0.0	0.0	0.0	0.0	0.0	0.0	0.0	0.0
55+50.00	34.4	0.0	0.0	31.9	27.1	0.0	0.0	27.1
56+00.00	39.5	0.0	0.0	68.5	58.2	0.0	0.0	58.2
56+50.00	36.7	0.0	0.0	70.6	60.0	0.0	0.0	60.0
57+00.00	35.1	0.0	0.0	66.6	56.6	0.0	0.0	56.6
57+50.00	33.8	0.0	0.0	63.8	54.2	0.0	0.0	54.2
58+00.00	35.3	0.0	0.0	63.9	54.3	0.0	0.0	54.3
58+50.00	32.4	0.0	0.0	62.7	53.3	0.0	0.0	53.3
59+00.00	30.4	0.0	0.0	58.1	49.4	0.0	0.0	49.4
I-39 NW EXIT RAMP FINAL STAGES SUBTOTALS				486	414	0	0	414

I-39 SW ENTRANCE RAMP	CUT (SQ FT)	TOPSOIL EXCAVATION AND PLACEMENT (SQ FT)	FILL (SQ FT)	CUT VOLUME (CU YD)	EXCAVATION TO BE USED IN EMBANKMENT ADJUSTED FOR SHRINKAGE (15% SHRINKAGE FACTOR) (CU YD)	TOPSOIL EXCAVATION AND PLACEMENT VOLUME (CU YD)	FILL VOLUME (CU YD)	EARTHWORK BALANCE ("+" = WASTE, "-" = SHORTAGE) (CU YD)
72+00.00	6.3	184.0	1005.6	0.0	0.0	0.0	0.0	0.0
72+50.00	6.5	107.0	256.8	11.8	10.0	269.4	1168.9	-1158.9
73+00.00	2.4	56.5	84.3	8.2	7.0	151.4	315.8	-308.8
73+50.00	1.5	19.8	5.5	3.6	3.0	70.6	83.1	-80.0
74+00.00	2.0	37.3	21.5	3.1	2.7	52.8	24.9	-22.2
74+50.00	4.0	26.3	15.2	5.5	4.6	58.8	33.9	-29.3
75+00.00	3.7	31.0	27.4	7.1	6.0	53.0	39.4	-33.4
75+50.00	3.4	30.5	31.3	6.5	5.5	56.9	54.4	-48.8
76+00.00	4.0	33.1	32.4	6.8	5.7	58.8	59.0	-53.2
76+50.00	5.7	24.7	21.9	8.9	7.6	53.5	50.2	-42.6
77+00.00	6.7	22.1	21.0	11.4	9.7	43.3	39.7	-30.0
I-39 SW ENTRANCE RAMP PRE-STAGE SUBTOTALS				73	62	869	1,870	-1,808

I-39 SW ENTRANCE RAMP	CUT (SQ FT)	TOPSOIL EXCAVATION AND PLACEMENT (SQ FT)	FILL (SQ FT)	CUT VOLUME (CU YD)	EXCAVATION TO BE USED IN EMBANKMENT ADJUSTED FOR SHRINKAGE (15% SHRINKAGE FACTOR) (CU YD)	TOPSOIL EXCAVATION AND PLACEMENT VOLUME (CU YD)	FILL VOLUME (CU YD)	EARTHWORK BALANCE ("+" = WASTE, "-" = SHORTAGE) (CU YD)
72+00.00	23.6	20.3	82.1	0.0	0.0	0.0	0.0	0.0
72+50.00	32.9	21.4	59.0	52.2	44.4	38.6	130.6	-86.2
73+00.00	45.0	21.6	64.7	72.1	61.3	39.8	114.4	-53.2
73+50.00	54.0	42.9	74.7	91.6	77.9	59.7	129.0	-51.2
74+00.00	50.3	30.5	66.4	96.5	82.0	68.0	130.6	-48.6
74+50.00	43.5	18.6	55.3	86.9	73.8	45.4	112.6	-38.8
75+00.00	39.4	13.9	34.6	76.7	65.2	30.0	83.1	-17.9
75+50.00	36.8	14.0	38.3	70.5	59.9	25.8	67.5	-7.5
76+00.00	35.0	14.5	42.9	66.4	56.5	26.4	75.1	-18.7
76+50.00	34.0	15.3	31.9	63.8	54.3	27.6	69.2	-14.9
77+00.00	32.7	24.8	15.2	61.7	52.5	37.1	43.6	8.9
I-39 SW ENTRANCE RAMP FINAL-STAGES SUBTOTALS				739	628	399	956	-328

PRE-STAGE EARTHWORK SUMMARY

	(1) CUT VOLUME (CU YD)	(2) EXCAVATION TO BE USED IN EMBANKMENT ADJUSTED FOR SHRINKAGE (15% SHRINKAGE FACTOR) (CU YD)	(3) TOPSOIL EXCAVATION AND PLACEMENT (CU YD)	(4) FILL VOLUME (CU YD)	(5) EARTHWORK BALANCE ("+" = WASTE, "-" = SHORTAGE) (CU YD)
IL 38 MAINLINE	562	478	8,370	44,927	-44,449
I-39 NW EXIT RAMP	23	20	402	335	-315
I-39 SW ENTRANCE RAMP	73	62	869	1,870	-1,808
PRE-STAGE SUBTOTALS	**658**	**559**	**9,641**	**47,132**	**-46,573**

NOTES:
1. PAVEMENT REMOVAL IS PAID FOR SEPARATELY FROM EARTH EXCAVATION
2. COLUMNS 1, 3, AND 4 ARE SUBTOTALS DIRECTLY FROM EARTHWORK SCHEDULES
3. COLUMN 2 = COLUMN 1 x 0.85
4. COLUMN 5 = COLUMN 2 - COLUMN 4

EARTH EXCAVATION (20200100)	658
FURNISHED EXCAVATION (20400800)	46,573
TOPSOIL EXCAVATION AND PLACEMENT (21101505)	9,641

FINAL STAGES EARTHWORK SUMMARY

	(1) CUT VOLUME (CU YD)	(2) EXCAVATION TO BE USED IN EMBANKMENT ADJUSTED FOR SHRINKAGE (15% SHRINKAGE FACTOR) (CU YD)	(3) TOPSOIL EXCAVATION AND PLACEMENT (CU YD)	(4) FILL VOLUME (CU YD)	(5) EARTHWORK BALANCE ("+" = WASTE, "-" = SHORTAGE) (CU YD)
IL 38 MAINLINE	11,479	9,757	4,097	6,335	3,422
I-39 NW EXIT RAMP	486	413	0	0	413
I-39 SW ENTRANCE RAMP	739	628	399	956	-328
FINAL STAGE SUBTOTALS	**12,704**	**10,798**	**4,496**	**7,291**	**3,507**

NOTES:
1. PAVEMENT REMOVAL IS PAID FOR SEPARATELY FROM EARTH EXCAVATION
2. COLUMNS 1, 3, AND 4 ARE SUBTOTALS DIRECTLY FROM EARTHWORK SCHEDULES
3. COLUMN 2 = COLUMN 1 x 0.85
4. COLUMN 5 = COLUMN 2 - COLUMN 4

EARTH EXCAVATION (20200100)	12,704
FURNISHED EXCAVATION (20400800)	0
TOPSOIL EXCAVATION AND PLACEMENT (21101505)	4,496

MODEL: Schedule_01 [Sheet]
FILE NAME: N:\IDOT\220628\CAD_Sheets\Civil\D264N98-sht-schedules.dgn

CHRISTOPHER B. BURKE ENGINEERING, LTD.
9575 W. Higgins Road, Suite 600
Rosemont, Illinois 60018
(847) 823-0500

USER NAME = nhowelllindgren	DESIGNED -	REVISED -	
	DRAWN -	REVISED -	
	CHECKED -	REVISED -	
PLOT DATE = 2/6/2025	DATE -	REVISED -	

STATE OF ILLINOIS
DEPARTMENT OF TRANSPORTATION

IL 38/I-39 INTERCHANGE IMPROVEMENTS
SCHEDULE OF QUANTITIES

SCALE: | SHEET 3 OF 22 SHEETS | STA. TO STA.

F.A.* RTE.	SECTION	COUNTY	TOTAL SHEETS	SHEET NO.
*	141-1HBR-3 & (9, 10) R-3	OGLE	508	26
		CONTRACT NO. 64N98		
	ILLINOIS	FED. AID PROJECT		

*FAI ROUTE 39 (I-39) & FAP 567 (IL 38)

NITROGEN FERTILIZER NUTRIENT, PHOSPHOROUS FERTILIZER NUTRIENT, & POTASSIUM FERTILIZER NUTRIENT

LOCATION	AREA (ACRE)	QUANTITY (POUNDS)
SEEDING, CLASS 2A	5.25	472.5
SEEDING, CLASS 4A	7.75	697.5
PAY CODES 25000400, 25000500, 25000600	TOTAL	1170

SEEDING, CLASS 2A

STATION FROM	STATION TO	LT/RT	AREA (SQ FT)	QUANTITY (ACRES)
STAGE 1B				
638+24.17	648+89.91	LT	10512.0	0.241
638+24.17	648+89.91	LT	32282.5	0.741
648+89.91	651+55.30	LT	530.9	0.012
652+53.91	656+22.53	LT	2453.6	0.056
672+58.43	681+45.54	LT	30890.6	0.709
672+94.71	681+45.54	LT	21268.3	0.488
STAGE 1C				
672+27.79	673+30.23	LT	6197.1	0.142
STAGE 2B				
654+04.64	656+19.57	RT	1179.5	0.027
658+52.33	662+49.80	RT	8573.0	0.197
667+66.03	671+50.09	LT	9405.0	0.216
667+65.51	671+70.90	RT	8548.0	0.196
672+76.74	679+59.48	LT/RT	28973.0	0.665
673+74.26	677+16.52	RT	1782.3	0.041
FINAL STAGE				
631+39.51	633+08.00	LT/RT	521.0	0.012
635+12.10	636+88.35	LT	2123.0	0.049
636+27.54	636+50.07	RT	167.0	0.004
637+90.61	638+24.17	LT	155.5	0.004
638+05.86	638+61.43	LT	591.2	0.014
645+75.11	650+82.57	LT/RT	8662.0	0.195
652+35.64	657+46.47	LT/RT	23580.8	0.541
658+73.13	662+56.93	LT	8370.0	0.192
680+99.98	685+00.49	LT/RT	6382.3	0.147
686+01.62	688+99.98	LT/RT	6794.6	0.156
PAY CODE 25000210		TOTAL		5.25

SEEDING, CLASS 4A

STATION FROM	STATION TO	LT/RT	AREA (SQ FT)	QUANTITY (ACRES)
STAGE 1B				
648+89.88	657+56.07	LT	17111.0	0.393
648+89.88	660+43.25	LT	52997.3	1.217
658+85.19	664+40.10	LT	44303.6	1.017
666+06.71	671+88.48	LT	45378.2	1.042
STAGE 1C				
658+69.68	660+83.52	LT	12965.1	0.298
STAGE 2B				
652+35.64	661+71.63	RT	48844.3	1.121
672+28.49	677+91.69	RT	26273.3	0.603
FINAL STAGE				
658+75.44	664+16.47	RT	57022.0	1.309
666+29.43	671+87.70	RT	32027.1	0.735
PAY CODE 25000312		TOTAL		7.75

EROSION CONTROL BLANKET

STATION FROM	STATION TO	LT/RT	AREA (SQ FT)	AREA (SQ YD)
STAGE 1B				
638+24.17	660+43.25	LT	65963.3	7329.3
638+24.17	657+56.07	LT	49924.0	5547.1
658+85.19	664+40.10	LT	44303.6	4922.6
666+06.21	671+88.48	LT	45378.0	5042.0
672+58.43	681+45.54	LT	30890.6	3432.3
672+94.71	681+45.54	LT	21268.3	2363.1
STAGE 1C				
658+69.68	660+83.52	LT	12965.1	1440.6
672+27.79	673+30.23	LT	6197.1	688.6
STAGE 2B				
652+35.78	661+71.63	RT	50023.7	5558.2
658+52.31	662+49.80	RT	8573.0	952.6
667+65.51	671+70.90	RT	8543.0	949.2
667+66.03	671+50.09	LT	9405.0	1045.0
672+28.49	677+91.69	RT	28055.6	3117.3
672+76.74	679+59.48	LT/RT	28973.0	3219.2
FINAL STAGE				
631+39.51	633+08.00	LT/RT	521.0	57.9
635+12.10	636+88.35	LT	2123.0	235.9
636+27.54	636+50.07	RT	167.0	18.6
637+90.61	638+24.17	LT	155.5	17.3
638+05.86	638+61.43	LT	591.2	65.7
645+75.11	650+82.57	LT/RT	8662.0	962.4
652+35.64	657+46.47	LT/RT	23580.8	2620.1
658+73.13	662+56.93	LT	8370.0	930.0
658+75.44	664+16.47	RT	57022.0	6335.8
666+29.43	671+87.70	RT	32027.1	3558.6
680+99.98	685+00.49	LT/RT	6382.3	709.1
686+01.62	688+99.98	LT/RT	6794.6	755.0
PAY CODE 25100630			TOTAL	61874

PERIMETER EROSION BARRIER

STATION FROM	STATION TO	LT/RT	LENGTH (FOOT)
PRE-STAGE			
655+75.64	656+23.75	RT	96
655+75.71	656+23.82	LT	96
658+93.07	661+19.39	LT	486
662+59.28	663+52.85	RT	1,119
667+18.57	671+92.83	RT	546
STAGE 1A			
638+24.17	651+55.31	LT	1,335
658+13.92	660+43.25	LT	545
658+93.07	664+38.24	LT	574
666+06.60	671+88.48	LT	672
672+27.78	672+47.73	LT	72
678+37.28	681+45.54	LT	320
STAGE 2A			
657+88.80	661+71.63	RT	652
STAGE 2B			
663+52.85	664+15.71	RT	63
666+28.71	667+85.30	RT	157
FINAL STAGE			
635+12.10	636+88.35	LT	298
637+90.61	638+24.17	LT	34
PAY CODE 28000400		TOTAL	7,066

INLET AND PIPE PROTECTION

STATION	OFFSET	LT / RT	QUANTITY (EACH)
IL 38			
638+61.43	69.00	LT	1
NW RAMP			
57+88.55	89.24	LT	1
SW RAMP			
72+96.99	94.86	LT	1
PAY CODE 28000500		TOTAL	3

TEMPORARY DITCH CHECKS

STATION	LT/RT	LENGTH (FEET)
PRE-STAGE		
654+06.40	RT	14
654+76.23	RT	14
655+49.86	RT	14
666+79.32	RT	14
674+86.19	RT	14
676+12.82	RT	14
STAGE 1A		
639+56.72	LT	14
641+06.64	LT	14
642+56.62	LT	14
644+06.57	LT	14
645+56.57	LT	14
647+06.57	LT	14
648+56.67	LT	14
650+06.56	LT	14
653+29.54	LT	14
654+01.96	LT	14
654+73.35	LT	14
655+03.94	LT	14
655+33.41	LT	14
655+62.42	LT	14
674+81.45	LT	14
676+27.89	LT	14
680+22.14	LT	14
STAGE 2A		
653+01.27	LT/RT	14
653+76.27	LT/RT	14
654+51.27	LT/RT	14
655+26.27	LT/RT	14
655+81.27	LT/RT	14
656+11.27	LT/RT	14
656+41.27	LT/RT	14
656+71.27	LT/RT	14
657+01.27	LT/RT	14
659+23.49	LT	14
660+24.46	LT	14
660+99.44	LT	14
659+23.49	RT	14
660+24.46	RT	14
660+99.44	RT	14
668+54.23	LT	14
669+28.70	LT	14
670+03.33	LT	14
670+77.80	LT	14
668+54.23	RT	14
669+28.70	RT	14
670+03.33	RT	14
670+77.80	RT	14
673+08.01	LT/RT	14
673+38.01	LT/RT	14
673+68.01	LT/RT	14
673+98.01	LT/RT	14
674+28.01	LT/RT	14
674+58.01	LT/RT	14
674+88.01	LT/RT	14
676+51.23	LT/RT	14
PAY CODE XX008865	TOTAL	756

TEMPORARY EROSION CONTROL SEEDING

LOCATION	AREA (SQ YD)	AREA (ACRE)	QUANTITY (POUND)
PRE-STAGE			
EROSION CONTROL BLANKET (PRE-STAGE)	20282	0.466	46.6
STAGE 1A			
EROSION CONTROL BLANKET (STAGE 1A)	34226	0.786	78.6
STAGE 1B			
EROSION CONTROL BLANKET (STAGE 1B)	2129	0.049	4.9
STAGE 2A			
EROSION CONTROL BLANKET (STAGE 2A)	15755	0.362	36.2
STAGE 2B			
EROSION CONTROL BLANKET (STAGE 2B)	9894	0.227	22.7
PAY CODES 28000250		TOTAL	153

INLET FILTERS (BASKET TYPE)

STATION	OFFSET	LT / RT	QUANTITY (EACH)
PRE-STAGE CONSTRUCTION			
639+06.97	2.50	RT	1
639+07.02	6.60	RT	1
641+52.42	2.20	RT	1
641+52.35	9.40	RT	1
644+00.94	6.08	LT	1
644+01.05	5.20	RT	1
646+52.04	7.50	LT	1
646+52.33	6.10	RT	1
649+02.32	7.50	LT	1
649+02.69	6.20	RT	1
651+52.17	7.30	LT	1
651+52.15	6.40	RT	1
STAGE 2A			
671+00.00	15.50	LT	1
671+00.00	15.50	RT	1
FINISHED STAGE			
631+34.64	8.52	RT	1
633+51.88	1.50	LT	1
655+50.00	0.00	LT/RT	1
657+62.51	29.30	RT	1
657+64.24	28.70	LT	1
659+50.00	18.30	LT	1
659+50.00	18.30	RT	1
672+90.68	40.10	LT	1
672+71.88	33.40	RT	1
PAY CODE 28000510		TOTAL	23

TEMPORARY EROSION CONTROL BLANKET

STATION FROM	STATION TO	LT/RT	AREA (SQ FT)	AREA (SQ YD)
PRE-STAGE				
652+98.93	658+24.83	RT	41123.5	4569.3
658+51.49	661+19.39	LT	14631.9	1625.8
658+60.94	663+52.85	RT	61216.6	6801.8
667+19.28	671+92.83	RT	35189.4	3909.9
672+33.43	677+91.69	RT	30379.5	3375.5
STAGE 1A				
630+24.17	660+43.25	LT	65963.3	7329.3
638+24.17	657+56.07	LT	49924.4	5547.2
652+37.15	656+83.07	LT/RT	11601.2	1289.0
658+49.73	662+50.00	LT	9425.0	1047.2
658+82.81	664+39.33	LT	45039.5	5004.4
666+06.46	671+88.47	LT	45378.2	5042.0
667+65.58	671+70.14	LT	11043.1	1227.0
672+27.78	681+45.54	LT	36725.8	4080.6
672+94.71	681+45.54	LT	21268.3	2363.1
673+21.56	679+59.55	LT	11664.1	1296.0
STAGE 1B				
658+69.68	660+83.52	LT	12965.1	1440.6
672+27.73	673+30.23	LT	6197.1	688.6
STAGE 2A				
652+35.71	661+71.63	RT	50023.7	5558.2
653+09.38	657+30.79	RT	7429.8	825.5
658+52.33	662+49.80	RT	8926.0	991.7
667+66.03	671+29.55	LT	9636.4	1070.7
667+65.51	671+70.88	RT	8851.8	983.5
672+28.49	677+91.09	RT	28055.0	3117.0
672+76.74	679+59.48	LT/RT	28973.0	3219.2
STAGE 2B				
658+75.44	664+16.47	RT	57022.0	6335.8
666+29.07	671+87.70	RT	32027.0	3558.6
PAY CODE 28001100		TOTAL	82287	

AGGREGATE SUBGRADE IMPROVEMENT 18"

STATION FROM	STATION TO	LT / RT	AREA (SQ FT)	AREA (SQ YD)
IL 38				
652+35.64	663+86.47	LT/RT	110,828.0	12,314.2
PAY CODE 30300118			TOTAL	12,315

STONE RIPRAP, CLASS A3

OUTLET LOCATION STRUCTURE	STA	LT/RT	WIDTH (FT)	LENGTH (FT)	AREA (SQ FT	AREA (SQ YD)
STAGE 1A						
CONC HEADWALL	652+37	LT	2.0	3.0	6.0	0.7
CONC HEADWALL	656+03	LT	2.0	3.0	6.0	0.7
CONC HEADWALL	659+06	LT	2.0	3.0	6.0	0.7
CONC HEADWALL	670+01	LT	2.0	3.0	6.0	0.7
CONC HEADWALL	675+55	LT	2.0	3.0	6.0	0.7
CONC HEADWALL	679+60	LT	2.0	3.0	6.0	0.7
CONC HEADWALL	59+00	RT	2.0	3.0	6.0	0.7
CONC HEADWALL	12+46	LT	2.0	3.0	6.0	0.7
STAGE 1B						
CONC HEADWALL	55+14	LT	2.0	3.0	6.0	0.7
CONC HEADWALL	12+03	RT	2.0	3.0	6.0	0.7
STAGE 2A						
CONC HEADWALL	652+35	RT	2.0	3.0	6.0	0.7
CONC HEADWALL	656+06	RT	2.0	3.0	6.0	0.7
CONC HEADWALL	659+06	RT	2.0	3.0	6.0	0.7
CONC HEADWALL	670+01	RT	2.0	3.0	6.0	0.7
CONC HEADWALL	674+50	RT	2.0	3.0	6.0	0.7
CONC HEADWALL	677+90	RT	2.0	3.0	6.0	0.7
CONC HEADWALL	72+00	RT	2.0	3.0	6.0	0.7
CONC HEADWALL	76+38	RT	2.0	3.0	6.0	0.7
CONC HEADWALL	121+21	RT	2.0	3.0	6.0	0.7
STAGE 2B						
CONC HEADWALL	76+01	LT	2.0	3.0	6.0	0.7
CONC HEADWALL	121+24	LT	2.0	3.0	6.0	0.7
PAY CODE 28100105					TOTAL	14

STONE RIPRAP, CLASS A4

OUTLET LOCATION STRUCTURE	STA	LT/RT	WIDTH (FT)	LENGTH (FT)	AREA (SQ FT	AREA (SQ YD)
PRE-STAGE						
S101	638+61	LT	8.0	22.0	176.0	19.6
S102	638+98	LT	8.5	11.0	93.5	10.4
S201	641+52	LT	8.5	11.0	93.5	10.4
S202	643+93	LT	8.5	11.0	93.5	10.4
S203	646+43	LT	8.5	11.0	93.5	10.4
S204	648+93	LT	8.5	11.0	93.5	10.4
S209	651+52	LT	8.5	11.0	93.5	10.4
S302	655+50	LT	8.5	11.0	93.5	10.4
S303	657+37	LT	10.7	18.0	193.0	21.4
S306	657+42	RT	10.7	18.0	193.0	21.4
S310	659+50	LT	12.9	94.0	1209.0	134.3
S313	663+81	LT	8.7	96.0	838.5	93.2
S318	663+81	LT	8.7	92.0	803.5	89.3
S319	666+65	LT	8.7	88.6	769.1	85.5
S324	666+65	LT	8.6	89.7	775.9	86.2
S328	659+48	RT	10.7	18.0	193.0	21.4
S406	671+00	LT	11.3	28.6	323.6	36.0
S408	673+00	LT	8.5	11.0	93.5	10.4
S410	673+14	RT	10.7	18.0	193.0	21.4
S412	675+02	LT	8.5	11.0	93.5	10.4
S416	678+38	LT	13.0	24.0	312.0	34.7
PAY CODE 28100107					TOTAL	758

STONE RIPRAP, CLASS A5

OUTLET LOCATION STRUCTURE	STA	LT/RT	WIDTH (FT)	LENGTH (FT)	AREA (SQ FT	AREA (SQ YD)
PRE-STAGE						
BOX CULVERT	656+00	RT	30.0	25.0	710.9	79.0
BOX CULVERT	656+00	LT	30.0	25.0	710.9	79.0
PAY CODE 28100109					TOTAL	158

AGGREGATE SUBGRADE IMPROVEMENT 12"

STATION FROM	STATION TO	LT / RT	AREA (SQ FT)	AREA (SQ YD)
IL 38				
631+49.44	633+49.51	LT/RT	986.0	109.6
635+26.13	636+92.79	LT	2,608.0	289.8
636+26.21	636+53.43	RT	204.0	22.7
637+87.20	638+14.57	LT	206.0	22.9
641+75.96	643+97.29	LT/RT	902.0	100.2
666+59.47	679+60.00	LT/RT	129,066.0	14,340.7
NW RAMP				
55+14.00	60+05.54	LT/RT	18,345.0	2,038.3
SW RAMP				
70+91.21	77+38.00	LT/RT	25,949.0	2,883.2
PAY CODE 30300112			TOTAL	19,808

FILTER FABRIC

OUTLET LOCATION STRUCTURE	STA	LT/RT	RIPRAP AREA (SQ YD)	AREA (SQ YD)
PRE-STAGE				
BOX CULVERT	656+00	RT	79.0	79.0
BOX CULVERT	656+00	RT	79.0	79.0
S101	638+61	LT	19.6	19.6
S102	638+98	LT	10.4	10.4
S201	641+52	LT	10.4	10.4
S202	643+93	LT	10.4	10.4
S203	646+43	LT	10.4	10.4
S204	648+93	LT	10.4	10.4
S209	651+52	LT	10.4	10.4
S302	655+50	LT	10.4	10.4
S303	657+37	LT	21.4	21.4
S306	657+42	RT	21.4	21.4
S310	659+50	LT	134.3	134.3
S313	663+81	LT	93.2	93.2
S318	663+81	LT	89.3	89.3
S319	666+65	LT	85.5	85.5
S324	666+65	LT	86.2	86.2
S328	659+48	RT	21.4	21.4
S406	671+00	LT	36.0	36.0
S408	673+00	LT	10.4	10.4
S410	673+14	RT	21.4	21.4
S412	675+02	LT	10.4	10.4
S416	678+38	LT	34.7	34.7
STAGE 1A				
CONC HEADWALL	652+37	LT	0.7	0.7
CONC HEADWALL	656+03	LT	0.7	0.7
CONC HEADWALL	659+06	LT	0.7	0.7
CONC HEADWALL	670+01	LT	0.7	0.7
CONC HEADWALL	675+55	LT	0.7	0.7
CONC HEADWALL	679+60	LT	0.7	0.7
CONC HEADWALL	59+00	RT	0.7	0.7
CONC HEADWALL	12+46	LT	0.7	0.7
STAGE 1B				
CONC HEADWALL	55+14	LT	0.7	0.7
CONC HEADWALL	12+03	RT	0.7	0.7
STAGE 2A				
CONC HEADWALL	652+35	RT	0.7	0.7
CONC HEADWALL	656+06	RT	0.7	0.7
CONC HEADWALL	659+06	RT	0.7	0.7
CONC HEADWALL	670+01	RT	0.7	0.7
CONC HEADWALL	674+50	RT	0.7	0.7
CONC HEADWALL	677+90	RT	0.7	0.7
CONC HEADWALL	72+00	RT	0.7	0.7
CONC HEADWALL	76+38	RT	0.7	0.7
CONC HEADWALL	121+21	RT	0.7	0.7
STAGE 2B				
CONC HEADWALL	76+01	LT	0.7	0.7
CONC HEADWALL	121+24	LT	0.7	0.7
PAY CODE 28200200		TOTAL	931	

SUBBASE GRANULAR MATERIAL, TYPE B

LOCATION	SURFACE TO BE PLACED UNDER	THICKNESS (IN)	AREA (SQ FT)	VOLUME (CU YD)
IL-38 & DEMENT RD				
NW ISLAND	6" PCC SIDEWALK & TYPE B CURB	8.5	233	7
NW ISLAND	CONCRETE MEDIAN SURFACE, 4"	16.5	143	8
NW ISLAND	TY B-6.24 C&G & 10" PCC PAVEMENT	4	515	7
NE ISLAND	6" PCC SIDEWALK & TYPE B CURB	8.5	256	7
NE ISLAND	CONCRETE MEDIAN SURFACE, 4"	16.5	723	37
NE ISLAND	TY B-6.24 C&G & 10" PCC PAVEMENT	4	863	11
SW ISLAND	6" PCC SIDEWALK & TYPE B CURB	8.5	199	6
SW ISLAND	CONCRETE MEDIAN SURFACE, 4"	16.5	463	24
SW ISLAND	TY B-6.24 C&G & 10" PCC PAVEMENT	4	701	9
IL-38 & I-39 DDI				
NW RAMP ISLAND	6" PCC SIDEWALK & TYPE B CURB	8.5	415	11
NW RAMP ISLAND	CONCRETE MEDIAN SURFACE, 4"	16.5	2,652	136
SW RAMP ISLAND	CONCRETE MEDIAN SURFACE, 4"	16.5	2,828	145
NE RAMP ISLAND	6" PCC SIDEWALK & TYPE B CURB	8.5	784	21
NE RAMP ISLAND	CONCRETE MEDIAN SURFACE, 4"	16.5	5,270	269
SE RAMP ISLAND	CONCRETE MEDIAN SURFACE, 4"	16.5	3,268	167
PAY CODE 31101100		TOTAL	865	

SUBBASE GRANULAR MATERIAL, TYPE B 4"

STATION FROM	STATION TO	LT / RT	AREA (SQ FT)	AREA (SQ YD)
IL 38				
636+32.38	636+56.75	LT	255.0	28.3
636+30.78	636+43.46	RT	75.0	8.3
637+97.61	641+00.00	LT	3,205.0	356.1
641+00.00	652+00.00	LT	11,747.0	1,305.2
645+75.11	650+82.59	LT	1,845.0	205.0
645+75.11	650+82.59	RT	1,860.0	206.7
652+00.00	657+68.14	LT	6,149.0	683.2
658+58.51	661+71.97	LT/RT	3,083.0	342.6
668+54.47	671+65.20	LT/RT	3,051.0	339.0
672+84.43	681+43.92	LT	9,271.0	1,030.1
681+37.07	685+09.09	LT/RT	2,240.0	248.9
685+98.94	688+32.52	LT/RT	1,657.0	184.1
PAY CODE 31101200		TOTAL	4,938	

SUBBASE GRANULAR MATERIAL, TYPE B 6"

STATION FROM	STATION TO	LT / RT	AREA (SQ FT)	AREA (SQ YD)
IL 38				
661+71.97	663+86.47	LT / RT	4,719.0	524.3
666+59.47	668+54.47	LT / RT	4,290.0	476.7
PAY CODE 31101400		TOTAL	1,001	

SUBBASE GRANULAR MATERIAL, TYPE B 8"

STATION FROM	STATION TO	LT / RT	AREA (SQ FT)	AREA (SQ YD)
IL 38				
661+71.97	663+86.47	LT/RT	2,145.0	238.3
666+59.47	668+54.47	LT/RT	1,950.0	216.7
PAY CODE 31101600		TOTAL	455	

STABILIZED SUBBASE - HOT-MIX ASPHALT, 4"

STATION FROM	STATION TO	LT / RT	AREA (SQ FT)	AREA (SQ YD)
IL 38				
636+10.94	636+90.68	LT	1,597.8	177.5
652+35.64	663+86.47	LT/RT	114,728.7	12,747.6
666+59.47	679+60.00	LT/RT	123,412.6	13,712.5
NW RAMP				
55+14.00	59+00.00	LT	13,341.7	1,482.4
SW RAMP				
72+00.00	77+38.00	RT	19,451.3	2,161.3
PAY CODE 31200500		TOTAL AREA	30,282	

HOT-MIX ASPHALT BINDER COURSE, IL-19.0, N70

STATION FROM	STATION TO	AREA (SQ FT)	AREA (SQ YD)	DEPTH (INCH)	QUANTITY (TONS)
IL 38					
654+54.88	657+16.08	2,639.6	293.3	2.5	44.0
658+56.13	663+93.55	7,613.4	845.9	2.5	126.9
666+52.49	671+64.24	7,577.6	842.0	2.5	126.3
672+60.44	673+38.88	926.4	102.9	2.5	15.4
PAY CODE 40603085				TOTAL	313

PORTLAND CEMENT CONCRETE PAVEMENT 10"

STATION FROM	STATION TO	LT / RT	AREA (SQ FT)	AREA (SQ YD)
IL 38				
631+49.44	633+49.51	LT/RT	137.0	15.2
635+47.08	636+26.90	LT	261.0	29.0
636+57.22	636+94.54	LT	133.0	14.1
637+53.53	637+07.84	LT	55.0	6.1
637+87.20	638+11.90	LT	56.0	6.2
636+37.76	636+83.94	RT	337.0	37.4
636+28.91	636+53.43	RT	56.0	6.2
641+75.96	643+97.29	LT/RT	108.0	12.0
PAY CODE 42000500			TOTAL AREA	161

PORTLAND CEMENT CONCRETE PAVEMENT 10 1/2" (JOINTED)

STATION FROM	STATION TO	LT / RT	AREA (SQ FT)	AREA (SQ YD)
IL 38				
631+29.51	633+49.51	RT	264.1	29.3
636+25.71	636+92.79	LT	1,061.0	117.9
652+35.64	663+86.47	LT/RT	80,839.4	8,982.2
666+59.47	679+60.00	LT/RT	89,012.7	9,890.3
NW RAMP				
55+14.00	59+00.00	LT	8,385.0	931.7
SW RAMP				
72+00.00	77+38.00	RT	12,530.4	1,392.3
PAY CODE 42000500			TOTAL AREA	21,344

BITUMINOUS MATERIALS (TACK COAT)

LOCATION	AREA (SQ YD)	AREA (SQ FT)	QUANTITY (POUNDS)
RESURFACING AREA (ON TOP OF MILLED SURFACE) (SEE HOT-MIX ASPHALT SURFACE REMOVAL, 2 1/2" SCHEDULE)	2,085	18,765	938.3
NOTE: 0.05 lbs/sq ft on milled surfaces			
CONTINGENCY (5%)			46.9
PAY CODE 40600290		TOTAL	986

PROTECTIVE COAT

LOCATION	LENGTH (FOOT)	WIDTH (FOOT) (FOOT)	QUANTITY (SQ FT)	QUANTITY (SQ YD)
OVER PCC Pavement 10 1/2" (SEE SCHEDULE FOR AREA CALC)	N/A	N/A	161.00	17.9
OVER PCC Pavement 10 1/2" (JOINTED) (SEE SCHEDULE FOR AREA CALC)	N/A	N/A	192,092.50	21,343.6
OVER PCC SHOULDER 10 1/2" (SEE SCHEDULE FOR AREA CALC)	N/A	N/A	47,733.86	5,303.8
OVER CONCRETE CURB , TYPE B (SEE SCHEDULE FOR LENGTH CALC)	331	1.08	357.93	39.8
OVER CONCRETE CURB AND GUTTER, TYPE B-6.06 (SEE SCHEDULE FOR LENGTH CALC)	787	1.58	1,243.63	138.2
OVER CONCRETE CURB AND GUTTER, TYPE B-6.24 (SEE SCHEDULE FOR LENGTH CALC)	7,612	3.08	23,445.71	2,605.1
PCC SIDEWALK 6 INCH (SEE SCHEDULE FOR AREA CALC)	N/A	N/A	40,718.00	4,524.2
CONCRETE MEDIAN 4 INCH (SEE SCHEDULE FOR LENGTH CALC)	N/A	N/A	17,739	1,971.0
PAY CODE 42001300			TOTAL	35,926

TEMPORARY RAMP

STATION FROM	STATION TO	LT / RT	AREA (SQ FT)	AREA (SQ YD)
MOT STAGE 1A				
IL 38				
671+13.87	672+02.45	LT/RT	1,294.7	143.9
NW RAMP				
60+05.21	60+82.63	LT/RT	1,929.4	214.4
60+21.31	60+49.31	LT	352.7	39.2
NE RAMP				
10+29.75	11+22.84	LT	3,017.0	335.2
10+33.67	10+60.97	RT	369.8	41.1
MOT STAGE 1B				
IL 38				
658+42.06	659+02.04	LT/RT	1,083.1	120.3
NW RAMP				
60+05.21	60+63.91	LT	1,088.7	121.0
NE RAMP				
10+29.75	11+22.84	LT/RT	2,625.4	291.7
MOT STAGE 1C				
NW RAMP				
60+44.81	60+82.63	LT/RT	252.6	28.1
NE RAMP				
10+13.83	10+33.67	LT/RT	774.2	86.0
MOT STAGE 1D				
SW RAMP				
70+10.27	70+85.77	LT/RT	2,248.3	249.8
SE RAMP				
122+05.09	122+75.79	LT/RT	2,179.4	242.2
MOT STAGE 2A				
SW RAMP				
70+22.16	70+91.21	LT	878.0	97.6
SE RAMP				
122+05.07	122+64.53	LT	729.2	81.0
122+15.11	122+64.60	RT	301.6	33.5
PAY CODE 40600990			TOTAL	2,125

PAVEMENT REMOVAL

STATION FROM	STATION TO	LENGTH (FEET)	AVG WIDTH (FEET)	AREA (SQ FT)	AREA (SQYD)
PERMANENT PAVEMENT					
IL 38					
631+95.86	633+49.51	153.7	0.5	70.0	7.8
635+47.08	636+92.79	145.7	3.0	432.0	48.0
636+29.97	636+53.43	23.5	2.4	55.6	6.2
636+37.76	636+83.94	46.2	21.7	1,002.8	111.4
636+57.22	636+94.54	37.3	23.9	892.2	99.1
637+53.53	638+07.84	54.3	27.9	1,513.0	168.1
637+87.36	638+10.97	23.6	2.0	55.0	6.1
641+75.96	643+97.29	221.3	1.5	333.0	37.0
652+35.64	663+93.55	1157.9	53.0	61,386.6	6,820.7
666+52.50	666+75.00	22.5	24.0	540.1	60.0
666+52.49	666+75.00	22.5	24.3	547.0	60.8
666+75.00	679+60.00	1285.0	49.5	63,629.3	7,069.9
NW RAMP					
55+14.00	59+00.00	386.0	16.5	6,355.1	706.1
59+00.00	60+82.81	182.8	27.2	4,978.0	553.1
SW RAMP					
70+33.94	71+99.89	166.0	23.9	3,968.1	440.9
71+99.89	77+38.00	538.1	16.5	8,892.8	988.1
NE RAMP					
10+34.78	12+44.50	209.7	66.3	13,902.4	1,544.7
SE RAMP					
121+23.51	122+54.89	131.4	46.6	6,124.7	680.5
PAY CODE 44000100				TOTAL	19,409

PORTLAND CEMENT CONCRETE SIDEWALK 6 INCH

STATION FROM	STATION TO	LT / RT	AREA (SQ FT)
IL 38			
636+31.04	636+43.21	RT	71.0
636+32.62	636+56.54	LT	243.5
636+53.54	636+69.45	RT	181.7
636+72.20	636+89.67	LT	216.4
637+58.20	637+83.59	LT	233.0
637+97.86	641+00.00	LT	3,007.0
641+00.00	652+00.00	LT	11,012.4
652+00.00	657+71.96	LT	5,764.1
657+82.40	658+27.56	LT	377.4
658+58.51	663+86.47	LT/RT	5,216.2
666+59.47	671+64.71	LT/RT	4,989.0
671+95.65	672+70.16	LT	713.0
672+81.15	681+43.92	LT	8,692.5
PAY CODE 42400300		TOTAL	40,718

COMBINATION CURB AND GUTTER REMOVAL

STATION FROM	STATION TO	LT/RT	LENGTH (FEET)
IL 38			
631+19.51	633+49.40	LT/RT	230.3
636+06.04	636+88.20	LT	160.3
636+27.54	636+50.07	RT	29.3
637+90.61	638+13.26	LT	29.6
641+79.86	644+10.02	LT/RT	230.3
645+75.10	650+82.57	RT	507.5
645+75.11	650+82.57	LT	507.5
652+35.60	658+30.64	RT	595.0
652+38.55	658+30.52	LT	592.8
661+23.36	663+93.42	RT	270.1
661+23.46	663+93.38	LT/RT	270.2
666+52.56	666+75.00	LT	22.4
666+52.67	666+75.00	RT	22.3
666+75.00	669+24.04	LT	249.0
666+75.00	669+23.94	RT	249.3
672+10.46	679+60.00	LT	749.8
672+10.40	677+90.00	RT	581.1
681+37.07	684+99.45	LT	363.0
681+37.06	684+99.45	LT/RT	363.0
686+11.89	688+32.57	LT	221.0
685+99.45	688+31.69	LT/RT	220.0
PAY CODE 44000500		TOTAL	6,464

PAVED SHOULDER REMOVAL

STATION FROM	STATION TO	LENGTH (FEET)	AVG WIDTH (FEET)	AREA (SQ FT)	AREA (SQYD)
IL 38					
635+47.08	636+06.97	59.9	11.9	712.0	79.1
652+38.51	658+51.74	613.2	10.6	6,491.2	721.2
652+35.64	658+49.37	613.7	10.7	6,549.7	727.7
655+50.00	656+50.00	100.0	10.0	1,007.0	111.9
655+50.00	656+50.00	100.0	10.0	1,013.0	112.6
658+40.96	663+85.53	544.6	11.0	6,015.8	668.4
658+41.07	663+85.42	544.3	10.9	5,920.5	657.8
666+60.46	666+75.00	14.5	9.9	143.9	16.0
666+60.61	666+75.00	14.4	8.5	121.9	13.5
666+75.00	666+90.24	15.2	413.8	6,305.9	700.7
666+75.00	671+92.62	517.6	11.0	5,669.6	630.0
672+24.92	679+60.00	735.1	11.3	8,313.5	923.7
672+27.55	677+90.00	562.4	11.9	6,703.2	744.8
NW RAMP					
55+14.00	59+00.00	386.0	4.0	1,561.8	173.5
55+14.40	59+00.00	385.6	5.9	2,292.5	254.7
SW RAMP					
72+00.00	77+38.00	538.0	5.8	3,104.0	344.9
72+00.00	77+38.00	538.0	4.1	2,203.7	244.9
PAY CODE 44004250			TOTAL	7,126	

MEDIAN REMOVAL

STATION FROM	STATION TO	LT/RT	AREA (SQ FT)
PERMANENT PAVEMENT			
IL 38			
633+08.44	633+49.35	LT	82
641+80.14	644+09.96	LT/RT	434
658+30.59	658+40.46	LT/RT	102
658+92.53	663+93.40	LT/RT	5256
666+52.57	671+17.98	LT/RT	4725
672+10.43	673+26.81	LT/RT	1833
684+99.45	685+09.38	LT/RT	117
685+99.45	686+11.89	LT/RT	65
MOT STAGE 1D			
656+58.94	656+67.44	LT / RT	185.0
677+02.55	677+10.98	LT / RT	221.0
MOT POST-STAGE			
645+75.11	645+83.61	LT / RT	185.0
650+74.10	650+82.59	LT / RT	189.0
681+37.07	681+45.57	LT / RT	217.0
688+23.65	688+32.57	LT / RT	250.0
PAY CODE 44003100		TOTAL	13,868

HOT-MIX ASPHALT SURFACE REMOVAL, 2 1/2"

STATION FROM	STATION TO	LENGTH (FEET)	AVG WIDTH (FEET)	AREA (SQ FT)	AREA (SQ YD)
IL 38					
654+54.88	657+16.08	261.2	10.1	2,639.6	293.3
658+56.13	663+93.55	537.4	14.2	7,613.4	845.9
666+52.49	671+64.24	511.8	14.8	7,577.6	842.0
672+60.44	673+38.88	78.4	11.8	926.4	102.9
PAY CODE 44000159				TOTAL	2,085

CLASS B PATCHES, TYPE IV, 10 INCH

STATION FROM	STATION TO	LT / RT	LENGTH (FEET)	AVG WIDTH (FEET)	AREA (SQ FT)	AREA (SQ YD)
IL 38						
632+94.58	633+24.58	RT	30	12	360	40
632+94.58	633+24.58	RT	30	12	360	40
632+94.58	633+39.58	RT	45	12	540	60
636+19.21	639+14.37	RT	295	12	3540	393
636+19.21	639+14.37	RT	295	12	3540	393
636+19.21	639+14.37	RT	295	9	2765	307
640+16.34	640+61.34	RT	45	12	550	61
641+84.61	642+14.61	RT	30	12	360	40
643+14.94	643+44.94	RT	30	12	360	40
643+14.94	643+44.94	RT	30	12	360	40
644+30.87	644+60.87	RT	30	12	360	40
644+75.87	645+20.87	RT	45	12	540	60
646+11.16	646+56.16	RT	45	12	540	60
646+11.16	646+56.16	RT	45	12	540	60
646+40.94	646+55.94	LT	15	24	357	40
646+86.16	647+16.16	RT	30	12	360	40
646+86.16	647+16.16	RT	30	12	360	40
647+31.16	647+61.16	RT	30	12	360	40
648+92.38	649+07.38	LT	15	24	357	40
650+16.84	650+46.84	RT	30	12	360	40
650+16.84	650+46.84	RT	30	12	360	40
650+91.84	651+36.84	RT	45	12	540	60
650+91.84	651+66.84	RT	75	12	900	100
638+42.37	638+62.39	LT	20	16	311	35
638+62.39	639+97.44	LT	135	12	1620	180
638+75.76	638+90.78	LT	15	12	180	20
639+82.45	640+12.44	LT	12	30	360	40
640+72.47	641+02.47	LT	12	30	360	40
641+46.19	641+61.19	LT	52	15	784	60
641+61.19	641+76.12	LT	14	15	222	60
641+76.12	641+91.10	LT	52	15	780	60
642+35.70	642+65.98	LT	30	12	360	40
643+86.01	644+46.02	LT	60	12	720	80
645+50.93	645+80.93	LT	30	12	360	40
647+75.84	648+20.83	LT	45	12	540	60
647+90.82	648+20.83	LT	30	12	360	40
649+07.36	649+52.35	LT	45	12	540	60
650+91.59	651+21.59	LT	30	12	360	40
110+05.28	110+25.24	RT	20	15	300	33
110+05.28	110+25.24	RT	20	15	300	33
110+25.22	110+66.27	LT	41	14	574	64
110+45.74	110+66.27	LT	21	12	252	28
110+45.74	110+66.27	LT	21	12	252	28
110+45.74	110+66.27	RT	21	14	294	33
110+85.57	111+26.65	RT	41	16	656	73
111+05.91	111+26.65	RT	21	14	294	33
111+05.91	111+26.65	LT	21	14	294	33
DEMENT ROAD						
106+49.26	106+77.97	RT	40	13	520	58
106+49.26	106+64.11	RT	40	14	580	62
108+86.30	109+07.29	RT	41	16	656	73
108+86.30	109+07.26	RT	41	13	533	59
108+86.30	108+86.76	RT	20	12	240	27
108+86.30	108+86.76	RT	20	12	240	27
PAY CODE 44200976				TOTAL	3,592	

MODEL: Schedule_4 [Sheet]
FILE NAME: N:\IDOT\220628\CAD_Sheets\Civil\D264N98-sht-schedules.dgn

CHRISTOPHER B. BURKE ENGINEERING, LTD.
9575 W. Higgins Road, Suite 600
Rosemont, Illinois 60018
(847) 823-0500

USER NAME = nhowelllindgren	DESIGNED -	REVISED -	
	DRAWN -	REVISED -	
	CHECKED -	REVISED -	
PLOT DATE = 2/6/2025	DATE -	REVISED -	

STATE OF ILLINOIS
DEPARTMENT OF TRANSPORTATION

IL 38/I-39 INTERCHANGE IMPROVEMENTS
SCHEDULE OF QUANTITIES

SCALE: | SHEET 6 OF 22 SHEETS | STA. | TO STA.

F.A.* RTE.	SECTION	COUNTY	TOTAL SHEETS	SHEET NO.
*	141-1HBR-3 & (9, 10) R-3	OGLE	508	29
		CONTRACT NO. 64N98		
	ILLINOIS	FED. AID PROJECT		

*FAI ROUTE 39 (I-39) & FAP 567 (IL 38)

CLASS B PATCHES, TYPE I, 10 INCH

STATION FROM	STATION TO	LT / RT	LENGTH (FEET)	AVG WIDTH (FEET)	AREA (SQ FT)	AREA (SQ YD)
DEMENT ROAD						
108+23.57	108+25.57	RT	2	2	4	1
108+43.00	108+46.00	RT	3	2	6	1
PAY CODE 44200966					TOTAL	2

CLASS B PATCHES, TYPE II, 10 INCH

STATION FROM	STATION TO	LT / RT	LENGTH (FEET)	AVG WIDTH (FEET)	AREA (SQ FT)	AREA (SQ YD)
IL 38						
643+11.03	643+26.03	LT	15	5	68	8
643+41.03	643+86.01	LT	45	2	68	8
109+51.07	109+64.07	RT	13	4	52	6
DEMENT ROAD						
106+73.87	107+00.28	RT	10	12	120	13
106+88.60	107+00.53	RT	10	6	60	7
PAY CODE 44200970					TOTAL	41

CLASS B PATCHES, TYPE III, 10 INCH

STATION FROM	STATION TO	LT / RT	LENGTH (FEET)	AVG WIDTH (FEET)	AREA (SQ FT)	AREA (SQ YD)
IL 38						
640+46.34	640+61.34	RT	15	12	180	20
641+03.38	641+18.38	RT	15	12	186	21
641+03.38	641+18.38	RT	15	12	186	21
641+03.38	641+18.38	RT	15	12	186	21
641+84.61	641+99.61	RT	15	12	180	20
641+84.61	641+99.61	RT	15	12	180	20
644+30.87	644+45.87	RT	15	12	180	20
647+31.16	647+46.16	RT	15	12	180	20
649+10.85	649+25.85	RT	15	12	180	20
649+10.85	649+25.85	RT	15	12	180	20
649+10.85	649+25.85	RT	15	12	180	20
649+55.85	649+70.85	RT	15	12	180	20
649+55.85	649+70.85	RT	15	12	180	20
649+85.81	650+00.81	RT	15	12	180	20
650+61.84	650+76.84	RT	15	12	180	20
650+61.84	650+76.84	RT	15	12	180	20
633+98.90	634+13.90	LT	15	12	180	20
634+89.90	635+04.90	LT	15	12	180	20
636+19.31	636+36.34	LT	15	12	180	20
638+75.76	638+90.78	LT	15	12	180	20
639+07.43	639+22.43	LT	15	12	180	20
639+97.43	640+12.44	LT	12	15	180	20
640+42.47	640+57.47	LT	12	15	180	20
641+46.17	641+61.17	LT	12	15	180	20
641+46.17	641+61.17	LT	12	15	180	20
641+76.16	641+90.81	LT	15	12	180	20
641+76.16	641+90.81	LT	15	12	180	20
641+76.16	641+90.81	LT	15	12	180	20
644+00.99	644+16.01	LT	15	12	180	20
645+05.96	645+20.94	LT	15	12	180	20
645+05.96	645+20.94	LT	15	12	180	20
649+07.36	649+22.36	LT	15	12	180	20
650+91.59	651+06.59	LT	15	12	180	20
109+64.07	109+77.12	RT	13	16	202	22
PAY CODE 44200974					TOTAL	665

SIDEWALK REMOVAL

STATION FROM	STATION TO	LT/RT	AREA (SQ FT)
IL 38			
680+65.95	681+43.92	LT	769.9
PAY CODE 44000600		TOTAL	770

AGGREGATE SHOULDERS, TYPE A

STATION FROM	STATION TO	LT / RT	LENGTH (FT)	AREA (SQ FT)	AVG WIDTH (FT)	CROSS SECTIONAL AREA (SF)*	VOLUME (CU FT)	VOLUME (CU YD)
652+35.64	658+44.99	RT	697	1,390.2	2.0	0.5	346.6	12.8
652+38.51	657+54.08	LT	523	1,042.3	2.0	0.5	259.7	9.6
657+65.93	658+49.06	LT	161	813.0	5.0	2.0	326.0	12.1
658+83.86	663+86.47	LT	608.5	1,213.1	2.0	0.5	302.3	11.2
658+85.60	663+86.47	RT	622	1,240.7	2.0	0.5	309.4	11.5
666+59.47	671+88.47	LT	668	1,332.3	2.0	0.5	332.2	12.3
666+59.47	671+92.66	RT	607.5	1,211.6	2.0	0.5	302.0	11.2
672+27.79	672+04.43	LT	186.5	486.0	2.6	0.8	149.8	5.5
672+28.68	677+90.03	RT	638	1,412.0	2.2	0.6	387.0	14.3
672+94.71	679+60.00	LT	671.5	1,338.8	2.0	0.5	333.7	12.4
NW RAMP								
55+14.00	59+00.00	LT	372.5	741.5	2.0	0.5	184.5	6.8
55+14.00	59+00.00	RT	395.5	1,938.0	4.9	2.0	771.3	28.6
SW RAMP								
72+00.00	77+38.00	LT	522	1,040.5	2.0	0.5	259.2	9.6
72+00.00	77+38.00	RT	543.5	1,083.9	2.0	0.5	270.2	10.0
PAY CODE 48100200						TOTAL VOLUME		168

PORTLAND CEMENT CONCRETE SHOULDERS 10 1/2"

STATION FROM	STATION TO	LT / RT	AREA (SQ FT)	AREA (SQ YD)
IL 38				
635+26.13	635+47.07	LT	130.0	14.4
652+35.64	658+52.70	RT	3,581.6	398.0
652+38.51	658+54.86	LT	5,636.6	626.3
658+78.06	663+86.47	LT	4,995.0	555.0
658+81.68	663+86.47	RT	5,346.4	594.0
666+59.47	671+92.47	LT	3,318.5	368.7
666+59.47	671+96.66	RT	4,999.2	555.5
672+21.66	677+90.00	RT	5,374.6	597.2
672+22.14	679+60.00	LT	5,209.2	578.8
NW RAMP				
55+14.00	59+00.00	LT	1,489.7	165.5
55+14.00	59+00.00	RT	2,326.0	258.4
SW RAMP				
72+00.00	77+38.00	LT	2,088.6	232.1
72+00.00	77+38.00	RT	3,238.6	359.8
PAY CODE 48300510			TOTAL AREA	5,304

STORM SEWER REMOVAL 12"

STATION FROM	STATION TO	LT / RT	QUANTITY (FEET)
MOT PRE-STAGE			
646+51.75	-	LT	54.0
646+51.75	-	LT / RT	13.0
649+01.96	-	LT	54.0
649+01.96	-	LT / RT	13.0
MOT STAGE 1A			
663+89.96	-	LT	107.0
666+56.73	-	LT	102.0
MOT STAGE 1B			
639+07.00	-	LT	11.0
641+51.70	-	LT	71.0
644+01.71	-	LT	9.0
651+52.15	-	LT	14.0
MOT STAGE 2A			
663+89.50	-	RT	107.0
666+56.67	-	RT	102.0
676+00.00	-	RT	85.0
MOT POST-STAGE			
646+51.75	-	LT	7.0
PAY CODE 55100500		TOTAL	749

STORM SEWER REMOVAL 24"

STATION FROM	STATION TO	LT / RT	QUANTITY (FEET)
MOT STAGE 2B			
638+21.35	638+55.29	LT	35.0
PAY CODE 55101200		TOTAL	35

STORM SEWER REMOVAL 36"

STATION FROM	STATION TO	LT / RT	QUANTITY (FEET)
IL 38			
646+51.75	-	LT / RT	34.8
PAY CODE 55101600		TOTAL	35

CONCRETE HEADWALLS FOR PIPE DRAINS

STA	LT/RT	QUANTITY (EACH)
STAGE 1A		
652+37	LT	1
656+03	LT	1
659+06	LT	1
670+01	LT	1
675+55	LT	1
679+60	LT	1
59+00	RT	1
12+46	LT	1
STAGE 1B		
55+14	LT	1
12+03	RT	1
STAGE 2A		
652+35	RT	1
656+06	RT	1
659+06	RT	1
670+01	RT	1
674+50	RT	1
677+90	RT	1
72+00	RT	1
76+38	RT	1
121+21	RT	1
STAGE 2B		
76+01	LT	1
121+24	LT	1
PAY CODE 60100060		21

MANHOLES TO BE ADJUSTED

STATION FROM	OFFSET	LT / RT	QUANTITY (EACH)
IL 38			
636+87.87	68.45	LT	1
PAY CODE 6025500		TOTAL	1

REMOVING MANHOLES

STATION FROM	OFFSET	LT / RT	QUANTITY (EACH)
MOT STAGE 2A			
676+00.00	1.45	LT	1
MOT POST-STAGE			
646+52.23	0.57	LT	1
PAY CODE 60500040		TOTAL	2

PIPE UNDERDRAINS, TYPE 2, 6"

STATION FROM	STATION TO	LT / RT	QUANTITY (FEET)
STAGE 1A			
652+37	655+95	LT	429
656+03	658+20	LT	271
658+83	658+96	LT	16
659+06	663+68	LT	488
666+65	670+01	LT	353
670+05	12+46	LT	351
59+00	59+89	RT	111
672+56	675+55	LT	334
675+55	679+60	LT	431
STAGE 1B			
55+14	59+99	LT	494
11+43	12+03	RT	97
11+33	10+96	RT	43
STAGE 2A			
652+35	655+95	RT	393
656+06	658+13	RT	239
659+06	663+68	RT	491
666+65	670+01	RT	356
670+05	671+75	RT	176
672+37	674+50	RT	245
674+55	677+90	RT	355
71+09	72+00	RT	114
75+90	77+40	RT	166
121+21	121+85	RT	94
STAGE 2B			
71+73	76+01	LT	429
122+06	121+24	LT	108
PAY CODE 60108206		TOTAL	6,584

COMBINATION CONCRETE CURB AND GUTTER, TYPE B-6.24

STATION FROM	STATION TO	LT / RT	QUANTITY (FEET)
DEMENT ROAD INTERSECTION			
635+71.08	636+88.88	LT	192.2
636+27.85	636+50.50	RT	29.5
636+43.55	636+79.67	RT	78.4
636+61.44	636+89.79	LT	54.7
637+55.54	638+01.89	LT	95.0
637+90.18	638+12.95	LT	29.8
IL 38			
631+49.44	633+49.51	LT/RT	200.1
641+75.96	643+97.29	LT/RT	221.3
645+75.10	650+82.57	RT	507.5
645+75.11	650+82.57	LT	507.5
652+35.64	657+62.28	RT	522.9
652+38.51	657+62.28	LT	525.8
657+60.55	658+64.41	RT	116.8
657+62.28	658+78.61	LT	130.4
658+51.73	662+56.98	LT	414.2
658+51.73	662+56.98	RT	414.2
667+66.24	671+71.49	LT	414.2
667+66.24	671+71.49	RT	414.2
671+46.05	672+92.72	LT	162.8
671+61.28	672+73.84	RT	126.6
672+70.74	677+90.00	RT	528.2
672+70.74	679+60.00	LT	697.3
681+37.06	685+09.28	LT/RT	755.0
685+99.46	688+32.72	LT/RT	474.0
PAY CODE 60605000		TOTAL	7,612

MODEL: Schedule_5 [Sheet]
FILE NAME: N:\IDOT\220628\CAD_Sheets\Civil\D264N98-sht-schedules.dgn

CHRISTOPHER B. BURKE ENGINEERING, LTD.
9575 W. Higgins Road, Suite 600
Rosemont, Illinois 60018
(847) 823-0500

USER NAME = nhowellilindgren	DESIGNED -	REVISED -	
	DRAWN -	REVISED -	
	CHECKED -	REVISED -	
PLOT DATE = 2/6/2025	DATE -	REVISED -	

STATE OF ILLINOIS
DEPARTMENT OF TRANSPORTATION

IL 38/I-39 INTERCHANGE IMPROVEMENTS
SCHEDULE OF QUANTITIES

SCALE: | SHEET 7 OF 22 SHEETS | STA. TO STA.

F.A.* RTE.	SECTION	COUNTY	TOTAL SHEETS	SHEET NO.
*	141-1HBR-3 & (9, 10) R-3	OGLE	508	30
		CONTRACT NO. 64N98		
	ILLINOIS	FED. AID PROJECT		

*FAI ROUTE 39 (I-39) & FAP 567 (IL 38)

CONCRETE CURB, TYPE B

STATION FROM	STATION TO	LT / RT	QUANTITY (FEET)
DEMENT ROAD INTERSECTION			
636+53.18	636+58.69	RT	13.5
636+61.11	636+69.97	RT	22.9
636+71.32	636+71.69	LT	11.1
636+79.15	636+88.67	LT	10.4
636+82.84	636+89.72	LT	11.2
637+58.20	637+75.81	LT	18.7
637+58.25	637+83.97	LT	27.9
IL 38			
657+81.87	658+12.21	LT	33.2
657+93.14	658+28.29	LT	39.8
671+94.92	672+60.55	LT	74.1
672+11.00	672+70.64	LT	68.8
PAY CODE 60600605		TOTAL	331

COMBINATION CONCRETE CURB AND GUTTER, TYPE B-6.06

STATION FROM	STATION TO	LT / RT	QUANTITY (FEET)
DEMENT ROAD INTERSECTION			
636+44.03	636+76.13	LT	45.5
636+62.09	636+85.27	RT	31.9
637+59.79	638+02.37	RT	57.0
IL 38			
657+63.80	658+77.64	LT	145.8
657+62.09	658+63.80	RT	144.0
671+47.26	672+91.27	LT	218.9
671+62.50	672+72.45	RT	144.2
PAY CODE 60603500		TOTAL	787

CONCRETE MEDIAN, SURFACE 4 INCH

STATION FROM	STATION TO	LT/RT	AREA (SQ FT)
DEMENT ROAD INTERSECTION			
633+08.00	633+49.35	LT	266
636+46.47	636+59.20	RT	99.2
636+60.75	636+79.10	RT	382.7
636+62.83	636+73.63	LT	69.5
636+78.82	636+88.77	LT	55.9
636+82.33	636+89.67	LT	35.4
637+58.20	637+98.95	LT	507.0
637+58.20	637+75.17	LT	221.0
641+75.96	643+97.29	LT/RT	2352.0
IL 38 RAMPS			
657+62.87	658+12.94	LT	417.0
657+66.55	658+58.54	RT	2827.6
657+92.65	658+78.03	LT	2234.0
671+52.04	672+60.99	LT	4555.0
671+61.87	672+73.26	RT	3268.5
672+10.27	672+86.72	LT	714.0
PAY CODE 60618300		TOTAL	17739

STEEL PLATE BEAM GUARDRAIL, TYPE B, 6 FOOT POST

STATION FROM	STATION TO	LT / RT	LENGTH (FOOT)
MOT STAGE 1A			
663+08.00	663+89.00	RT	75.00
MOT STAGE 1D			
666+94.44	687+87.89	LT	87.50
FINAL CONSTRUCTION			
663+24.59	663+64.57	LT	37.50
666+81.36	667+33.84	RT	50.00
PAY CODE 63000007		TOTAL	250

TRAFFIC BARRIER TERMINAL, TYPE 6

STATION FROM	STATION TO	LT / RT	QUANTITY (EACH)
663+49.57	663+86.47	LT	1.0
666+59.47	666+96.36	RT	1.0
PAY CODE 63100085		TOTAL	2

TRAFFIC BARRIER TERMINAL, TYPE 10

STATION	LT / RT	QUANTITY (EACH)
MOT STAGE 1A		
663+88.87	RT	1.0
MOT STAGE 1D		
666+94.44	RT	1.0
PAY CODE 63100105	TOTAL	2

TRAFFIC BARRIER TERMINAL, TYPE 1 (SPECIAL) TANGENT

STATION FROM	STATION TO	LT / RT	QUANTITY (EACH)
MOT STAGE 1A			
662+58.00	663+08.00	RT	1
MOT STAGE 1D			
667+87.89	668+36.57	LT	1
FINAL CONSTRUCTION			
662+59.65	663+09.59	LT	1
667+48.84	667+98.85	RT	1
PAY CODE 63100167		TOTAL	4

GUARDRAIL REMOVAL

FROM STATION	TO STATION	LT / RT	LENGTH (FEET)
MOT PRE STAGE			
661+55.39	664+01.33	RT	246.25
MOT STAGE 1A			
666+41.54	668+90.38	LT	249.00
MOT STAGE 1D			
662+58.00	663+89.00	RT	131.25
MOT STAGE 3			
666+94.44	668+36.57	LT	143.75
PAY CODE 63200310		TOTAL	771

DELINEATORS

STATION FROM	STATION TO	LT / RT	QUANTITY (EACH)
NW RAMP			
55+14.00	60+39.99	RT	11
55+14.00	59+90.80	LT	14
SW RAMP			
70+40.44	77+38.00	RT	14
70+87.77	77+38.00	LT	11
NE RAMP			
10+79.88	12+44.50	RT	6
10+74.28	12+44.50	LT	8
SE RAMP			
121+23.51	122+26.36	RT	7
121+23.51	122+26.36	LT	8
PAY CODE 63500105			79

SHOULDER RUMBLE STRIPS, 16 INCH

STATION FROM	STATION TO	LT / RT	QUANTITY (FEET)
IL 38			
648+76.92	656+53.15	LT	779.2
649+95.42	657+08.57	RT	720.5
659+18.42	663+86.47	LT	470.8
659+31.76	663+86.47	RT	458.2
666+59.47	670+94.19	LT	440.6
666+59.47	671+00.13	RT	391.6
673+42.83	679+60.00	LT	621.9
673+82.77	677+90.03	RT	410.1
PAY CODE 64200116		TOTAL	4,293

WOVEN WIRE FENCE, 4'

STATION FROM	STATION TO	LT / RT	QUANTITY (FEET)
673+20.26	679+30.40	LT	640.0
674+34.02	676+57.68	RT	232.0
PAY CODE 66500105		TOTAL	872

RELOCATE SIGN PANEL - TYPE 1

STATION	LT/RT	TYPE	NOTES	QUANTITY (SQ FT)
PRE STAGE				
IL 38				
654+00.00	RT	RIGHT ARROW		2.2
654+00.00	RT	TO		2.0
654+00.00	RT	TOLL		2.0
654+00.00	RT	INTERSTATE 88		4.0
656+62.00	LT/RT	KEEP RIGHT		5.0
659+53.00	RT	SPEED LIMIT		7.5
659+53.00	RT	EAST		4.5
659+53.00	RT	STATE ROUTE	IL 38	9.0
662+28.00	RT	NORTH		4.5
662+28.00	RT	INTERSTATE 39		9.0
662+28.00	RT	LEFT TURN ARROW		4.5
662+28.00	RT	NORTH		4.5
662+28.00	RT	US ROUTE 51		9.0
662+28.00	RT	LEFT TURN ARROW		4.5
661+37.00	RT	NO RIGHT TURN		4.5
674+48.00	RT	SPEED LIMIT		7.5
674+48.00	RT	EAST		4.5
674+48.00	RT	STATE ROUTE	IL 38	9.0
PAY CODE 72400710			TOTAL	98.0

RELOCATE SIGN PANEL - TYPE 3

STATION	LT/RT	TYPE	NOTES	QUANTITY (SQ FT)
PRE STAGE				
IL 38				
657+50.00	RT	S LASALLE/ N ROCKFORD	HIGHWAY SIGN	245.0
671+37.00	RT	N ROCKFORD	HIGHWAY SIGN	55.0
PAY CODE 72400730			TOTAL	300.0

LOCATION #	STAGE	ROADWAY	STATION FROM	STATION TO	LT/RT	DESCRIPTION	70400100 TEMPORARY CONCRETE BARRIER	70400125 PINNING TEMPORARY CONCRETE BARRIER	70400200 RELOCATE TEMPORARY CONCRETE BARRIER	70600251 IMPACT ATTENUATORS, TEMPORARY (NON-REDIRECTIVE, NARROW), TEST LEVEL 3	70600352 IMPACT ATTENUATORS, RELOCATE (NON-REDIRECTIVE, NARROW), TEST LEVEL 3	RELOCATE FROM LOCATION #	NOTES
							FOOT	EACH	FOOT	EACH	EACH		
1	PRE STAGE	IL 38	654+18	656+68	RT	CULVERT EXTENSION	250	54		1			
2	PRE STAGE	IL 38	655+13	657+00	LT	CULVERT EXTENSION	187.5	39		1			
3	STAGE 1A	IL 38	663+39	668+15	RT	BRIDGE CONSTRUCTION	37.5		437.5		2	1 & 2	TO REMAIN THRU STAGES 1A TO 1C
4	STAGE 1A	IL 38	661+64	668+62	LT	BRIDGE CONSTRUCTION	700			2			
5	STAGE 1A	IL 38	663+89	664+01	RT	PARAPET END	12.5						PARAPET TO GAURDRAIL TRANSITION
6	STAGE 1A	IL 38	666+44	666+94	LT	PARAPET END	50						
7	STAGE 1A	NW RAMP	55+06	60+04	LT	RAMP CONSTRUCTION	500	114		1			
8	STAGE 1A	NE RAMP	11+15	12+50	LT	RAMP CONSTRUCTION	137.5	27		1			
9	STAGE 1B	NW RAMP	55+06	60+04	LT	RAMP CONSTRUCTION		114	500		1	7	
10	STAGE 1B	NE RAMP	11+15	12+50	LT	RAMP CONSTRUCTION		27	137.5		1	8	
11	STAGE 2A	SW RAMP	70+88	77+38	LT	RAMP CONSTRUCTION		150	650		1	9	
12	STAGE 2A	SE RAMP	121+10	122+10	LT	RAMP CONSTRUCTION		18	100		1	10	
13	STAGE 2B	SW RAMP	70+88	77+38	LT	RAMP CONSTRUCTION			650		1	11	
14	STAGE 2B	SE RAMP	121+10	122+10	LT	RAMP CONSTRUCTION			100		1	12	
						TOTAL	1875.0	543	2575	6	8		

MODEL: Schedule_6 [Sheet]
FILE NAME: N:\DOT\220628\CAD_Sheets\Civil\D284N98-sht-schedules.dgn

CHRISTOPHER B. BURKE ENGINEERING, LTD.
9575 W. Higgins Road, Suite 600
Rosemont, Illinois 60018
(847) 823-0500

USER NAME = jjezierny	DESIGNED -	REVISED -	
	DRAWN -	REVISED -	
	CHECKED -	REVISED -	
PLOT DATE = 3/20/2025	DATE -	REVISED -	

STATE OF ILLINOIS
DEPARTMENT OF TRANSPORTATION

IL 38/I-39 INTERCHANGE IMPROVEMENTS
SCHEDULE OF QUANTITIES

SCALE: | SHEET 8 OF 22 SHEETS | STA. | TO STA.

F.A.* RTE.	SECTION	COUNTY	TOTAL SHEETS	SHEET NO.
*	141-1HBR-3 & (9, 10) R-3	OGLE	508	31
		CONTRACT NO. 64N98		
	ILLINOIS	FED. AID PROJECT		

*FAI ROUTE 39 (I-39) & FAP 567 (IL 38)

TERMINAL MARKER - DIRECT APPLIED

STATION	LT / RT	QUANTITY (EACH)
MOT STAGE 1A		
IL 38		
662+58.00	RT	1
MOT STAGE 1D		
IL 38		
668+26.81	LT / RT	1
FINAL CONSTRUCTION		
IL 38		
662+74.65	RT	1
667+83.65	RT	1
PAY CODE 72501000		4

WOOD SIGN SUPPORT

STATION	LT/RT	TYPE	NOTES	SIGN HEIGHT (FEET)	LENGTH (FT)
PRE STAGE					
IL 38					
656+61.00	RT	TO/TOLL/I-88/RIGHT ARROW		4.25	17.5
656+62.00	LT/RT	KEEP RIGHT		2.5	13.5
657+50.00	RT	S LASALLE/ N ROCKFORD		14.5	28.0
657+51.00	RT	S LASALLE/ N ROCKFORD		14.5	28.0
659+53.00	RT	SPEED LIMIT		3	16.0
659+53.00	RT	EAST/STATE ROUTE	IL 38	3	16.0
662+26.00	RT	NORTH/ INT. 39/ LT ARROW		4.25	18.0
662+28.00	RT	NORTH/ US. 51/ LT ARROW		4.25	18.0
661+37.00	RT	ROCKFORD/ NO RIGHT TURN		10	23.0
661+37.00	RT	ROCKFORD/ NO RIGHT TURN		10	23.0
674+48.00	RT	SPEED LIMIT		3	16.0
674+48.00	RT	EAST/STATE ROUTE	IL 38	3	16.0
PAY CODE 73000100				TOTAL	233.0

TEMPORARY RAISED REFLECTIVE PAVEMENT MARKER

STATION FROM	STATION TO	LT / RT	LENGTH (FEET)	QUANTITY (EACH)
MOT STAGE 1A				
IL 38				
646+82.34	650+12.59	RT	331.8	33
646+83.04	650+12.58	LT/RT	330.3	33
692+18.95	694+16.86	RT	427.3	43
692+32.85	696+59.85	RT	198.3	20
MOT STAGE 1D				
IL 38				
647+74.79	651+87.30	LT	413.0	41
647+80.65	651+87.30	RT	408.9	41
692+49.88	696+59.70	LT/RT	411.0	41
692+49.89	696+59.70	LT/RT	411.0	41
PAY CODE 78100200			TOTAL	294

PAVEMENT MARKING REMOVAL - GRINDING

STATION FROM	STATION TO	LT / RT	DESCRIPTION	LINE TYPE (IN.)	LENGTH (FEET)	MULTIPLIER	QUANTITY (SQ FT)
MOT STAGE 1A							
IL 38							
652+35.94	658+89.83	RT	10' DASH 30' SKIP	6	653.90	0.25	82
652+35.91	657+52.29	RT	EDGE LINE	4	516.64	1	172
656+33.32	658+02.30	LT/RT	SOLID YELLOW	4	257.72	1	86
658+17.03	658+44.00	LT	10' DASH 30' SKIP	6	26.97	0.25	3
658+53.66	671+83.30	RT	SOLID WHITE LINE	6	1329.64	1	665
659+92.64	671+12.52	RT	SOLID WHITE LINE	6	1219.87	1	610
660+43.47	-	RT	COMB. LT THR ARROW	-	-	-	26
661+94.18	-	RT	COMB. LT THR ARROW	-	-	-	26
663+53.02	-	RT	COMB. LT THR ARROW	-	-	-	26
665+40.18	-	RT	COMB. LT THR ARROW	-	-	-	26
666+76.37	-	RT	COMB. LT THR ARROW	-	-	-	26
666+77.13	-	RT	THROUGH ARROW	-	-	-	12
666+89.00	669+10.40	RT	3' DASH 9' SKIP	6	220.70	0.25	28
667+99.07	-	RT	COMB. LT THR ARROW	-	-	-	26
667+99.83	-	RT	THROUGH ARROW	-	-	-	12
669+10.40	671+12.61	RT	SOLID WHITE LINE	6	202.20	1	101
669+31.00	-	RT	COMB. LT THR ARROW	-	-	-	26
669+31.00	-	RT	THROUGH ARROW	-	-	-	12
669+31.00	-	RT	LEFT ARROW	-	-		16
669+91.00	-	RT	COMB. LT THR ARROW	-	-	-	26
669+91.00	-	RT	THROUGH ARROW	-	-	-	12
669+92.00	-	RT	LEFT ARROW	-	-	-	16
670+37.00	-	RT	COMB. LT THR ARROW	-	-	-	26
670+37.00	-	RT	THROUGH ARROW	-	-	-	12
670+37.00	-	RT	LEFT ARROW	-	-	-	16
671+00.00	-	RT	COMB. LT THR ARROW	-	-	-	26
671+00.00	-	RT	THROUGH ARROW	-	-	-	12
671+00.00	-	RT	LEFT ARROW	-	-	-	16
671+12.61	671+12.61	RT	STOP BAR	24	37.99	1	76
671+12.61	671+90.42	LT/RT	3' DASH 9' SKIP	6	94.26	0.25	12
672+15.43	672+81.84	LT	SOLID WHITE LINE	6	65.41	1	33
672+27.05	672+60.70	LT	10' DASH 30' SKIP	6	33.66	0.25	4
672+27.24	677+90.04	RT	10' DASH 30' SKIP	6	562.81	0.25	70
673+38.80	677+90.02	RT	EDGE LINE	4	451.22	1	150
						SUBTOTAL	2483
						PAY CODE 78300201	

STATION FROM	STATION TO	LT / RT	DESCRIPTION	LINE TYPE (IN.)	LENGTH (FEET)	MULTIPLIER	QUANTITY (SQ FT)
MOT STAGE 1A							
NW RAMP							
55+14.00	60+50.44	LT	EDGE LINE	4	530.66	1	177
60+20.69	-	RT	RIGHT ARROW	-	-	-	16
60+22.74	-	LT	LEFT ARROW	-	-	-	16
60+29.83	60+55.47	LT	SOLID WHITE LINE	6	28.63	1	14
60+32.80	60+55.47	LT	STOP BAR	24	15.33	1	31
SW RAMP							
70+22.25	71+77.07	LT/RT	EDGE LINE	4	181.14	1	60
NE RAMP							
10+36.33	10+95.82	LT/RT	SOLID WHITE LINE	6	61.05	1	31
10+36.36	10+95.82	RT	SOLID WHITE LINE	6	80.84	1	40
10+36.33	10+95.82	LT/RT	MEDIAN STRIPES	12	237.54	1	238
10+89.22	12+44.50	LT/RT	EDGE LINE	4	161.87	1	54
SE RAMP							
121+23.51	121+54.76	LT	EDGE LINE	4	133.65	1	45
121+23.51	122+36.86	LT	SOLID WHITE LINE	6	114.07	1	57
121+23.54	12+55.37	LT/RT	EDGE LINE	4	202.69	1	68
121+27.65	-	LT	COMB. LT RT ARROW	-	-	-	26
121+27.71	-	LT	LEFT ARROW	-	-	-	16
121+77.47	-	LT	COMB. LT RT ARROW	-	-	-	26
121+77.42	-	LT	LEFT ARROW	-	-	-	16
122+13.49	-	RT	RIGHT ARROW	-	-	-	16
122+14.81	122+54.45	RT	SOLID WHITE LINE	6	41.14	1	21
122+16.72	-	LT	LEFT ARROW	-	-	-	16
122+16.83	-	LT	COMB. LT RT ARROW	-	-	-	26
122+36.86	123+12.03	LT/RT	3' DASH 9' SKIP	4	85.61	0.25	7
122+36.66	122+41.44	LT	STOP BAR	24	28.30	1	57
122+35.49	122+50.74	RT	STOP BAR	24	17.88	1	36
MOT STAGE 1C							
IL 38							
673+18.85	677+11.53	RT	EDGE LINE	4	392.68	1	131
						SUBTOTAL	1236
						TOTAL	3720

GUARDRAIL REFLECTORS, TYPE C (SPECIAL)

STATION FROM	STATION TO	LT/RT	LENGTH	QUANTITY (EACH)
GUARDRAIL				
MOT PRE STAGE				
662+57.81	86+38.87	RT	131.25	4
MOT STAGE 1A				
666+84.44	668+26.81	LT	143.75	4
FINAL CONSTRUCTION				
662+74.65	663+86.47	LT	124.40	4
666+59.47	667+83.65	RT	136.90	4
BARRIER WALL				
IL 38				
MOT PRE STAGE				
654+53.00	656+28.00	RT	175.00	14
655+71.00	657+21.00	LT	150.00	12
MOT STAGE 1A				
663+39.00	667+76.50	RT	462.50	38
663+89.00	664+01.24	RT	12.50	2
MOT STAGE 1D				
666+59.00	666+84.00	LT	25.00	2
I-39 BRIDGE PAINTING				
NORTHBOUND CONFIGURATION				
52+08.91	664+01.24	RT	567.80	46
52+08.91	664+01.24	RT	567.80	46
SOUTHBOUND CONFIGURATION				
56+82.26	62+49.43	LT	567.80	46
56+82.26	62+49.43	LT	567.80	46
GUARDAIL: SPACING 80' MAX FOR FIRST 400'. MINIMUM OF 4 REFLECTORS REGARDLESS OF LENGTH. SEE HIGHWAY STANDARD 782006-01 BARRIER WALL: SPACING 2 REFLECTORS FOR EVERY 25' OF BARRIER WALL.				
PAY CODE X7820007			TOTAL	268

MODEL: Schedule_7 [Sheet]
FILE NAME: N:\IDOT\220628\CAD_Sheets\Civil\D264N98-sht-schedules.dgn

CHRISTOPHER B. BURKE ENGINEERING, LTD.
9575 W. Higgins Road, Suite 600
Rosemont, Illinois 60018
(847) 823-0500

USER NAME = nhowelllindgren	DESIGNED -	REVISED -	
	DRAWN -	REVISED -	
	CHECKED -	REVISED -	
PLOT DATE = 2/6/2025	DATE -	REVISED -	

STATE OF ILLINOIS
DEPARTMENT OF TRANSPORTATION

IL 38/I-39 INTERCHANGE IMPROVEMENTS
SCHEDULE OF QUANTITIES

SCALE: | SHEET 9 OF 22 SHEETS | STA. TO STA.

F.A.* RTE.	SECTION	COUNTY	TOTAL SHEETS	SHEET NO.
*	141-1HBR-3 & (9, 10) R-3	OGLE	508	32
		CONTRACT NO. 64N98		
	ILLINOIS	FED. AID PROJECT		

*FAI ROUTE 39 (I-39) & FAP 567 (IL 38)

PAVEMENT MARKING REMOVAL - WATERBLASTING

STATION FROM	STATION TO	LT / RT	DESCRIPTION	LINE TYPE (IN.)	LENGTH (FEET)	MULTIPLIER	QUANTITY (SQ FT)
MOT STAGE 1A							
IL 38							
628+95.75	636+45.93	RT	10' DASH 30' SKIP	6	750.18	0.25	94
633+71.48	636+52.09	RT	SOLID WHITE LINE	6	280.62	1	140
637+15.34	638+23.53	LT/RT	3' DASH 9' SKIP	6	151.34	0.25	19
638+23.53	652+35.94	RT	10' DASH 30' SKIP	6	1415.05	0.25	177
644+90.04	646+96.42	LT	10' DASH 30' SKIP	6	206.38	0.25	26
649+18.93	652+35.91	RT	EDGE LINE	4	316.98	1	106
677+90.02	705+28.57	RT	EDGE LINE	4	2739.67	1	913
677+90.04	691+66.25	RT	10' DASH 30' SKIP	6	1376.30	0.25	172
682+91.18	685+03.09	RT	SOLID WHITE LINE	6	214.91	1	107
683+07.47	-	RT	LEFT ARROW	-	-	-	16
683+96.14	-	RT	LEFT ARROW	-	-	-	16
684+95.71	-	RT	LEFT ARROW	-	-	-	16
690+36.28	-	RT	LANE DROP ARROW	-	-	-	42
691+54.76	-	RT	LANE DROP ARROW	-	-	-	42
692+48.91	695+91.92	RT	DOUBLE YELLOW	4	343.09	2	229
692+49.91	694+71.04	RT	MEDIAN STRIPES	12	87.72	1	88
693+33.15	694+71.04	RT	DOUBLE YELLOW	4	138.05	2	92
DEMENT RD							
106+67.29	109+08.34	LT	SOLID WHITE LINE	6	241.05	1	121
106+67.75	109+07.35	LT	SOLID WHITE LINE	6	239.60	1	120
107+13.00	-	LT	COMB. LT THR ARROW	-	-	-	26
107+13.00	-	LT	LEFT ARROW	-	-	-	16
108+01.00	-	LT	COMB. LT THR ARROW	-	-	-	26
108+01.00	-	LT	LEFT ARROW	-	-	-	16
108+82.00	-	LT	COMB. LT THR ARROW	-	-	-	26
108+82.00	-	LT	LEFT ARROW	-	-	-	16
NW RAMP							
53+01.99	55+14.00	LT	EDGE LINE	4	212.57	1	71
NE RAMP							
12+44.50	14+08.08	LT	EDGE LINE	4	163.31	1	54
12+44.50	15+22.10	LT	10' DASH 30' SKIP	6	270.31	0.25	34
SE RAMP							
120+35.85	121+23.37	LT	EDGE LINE	4	87.66	1	29
120+35.97	121+23.11	LT	SOLID WHITE LINE	6	87.89	1	44
120+36.08	121+23.51	LT	EDGE LINE	4	87.44	1	29
120+77.00	-	LT	COMB. LT RT ARROW	-	-	-	26
120+77.00	-	LT	LEFT ARROW	-	-	-	16
MOT STAGE 1B							
IL 38							
656+59.17	657+71.85	LT	EDGE LINE	4	114.56	1	38
658+20.94	658+92.25	LT/RT	EDGE LINE	4	102.53	1	34
658+26.18	659+05.04	LT/RT	3' DASH 9' SKIP	6	94.05	0.25	12
659+59.20	659+05.04	RT	3' DASH 9' SKIP	6	67.44	0.25	8
659+05.04	659+28.26	RT	DOUBLE YELLOW	4	23.20	2	15
659+05.04	659+43.42	RT	DOUBLE YELLOW	4	38.77	2	26
670+69.71	670+96.64	RT	DOUBLE YELLOW	4	46.37	2	31
670+96.61	671+16.07	RT	SOLID WHITE LINE	8	19.45	1	13
670+96.61	670+96.61	RT	MEDIAN STRIPES	12	7.07	1	7
MOT STAGE 1C							
IL 38							
670+96.64	671+65.59	RT	DOUBLE YELLOW	4	19.61	2	13
671+16.08	671+16.08	RT	STOP BAR	24	12.00	1	24
671+16.08	671+65.59	RT	3' DASH 9' SKIP	6	54.08	0.25	7
673+15.41	673+15.41	RT	STOP BAR	24	12.00	1	24
MOT STAGE 1D							
IL 38							
656+59.17	658+46.82	RT	EDGE LINE	4	187.65	1	63
656+86.68	657+69.76	RT	DOUBLE YELLOW MEDIAN	4	195.99	2	131
656+86.68	657+69.76	RT	MEDIAN STRIPES	12	80.60	1	81
657+69.75	657+69.75	RT	STOP BAR	24	14.40	1	29
						SUBTOTAL	**3516**

STATION FROM	STATION TO	LT / RT	DESCRIPTION	LINE TYPE (IN.)	LENGTH (FEET)	MULTIPLIER	QUANTITY (SQ FT)
MOT STAGE 1D							
IL 38							
658+74.71	658+93.87	RT	EDGE LINE	4	19.16	1	6
658+74.71	659+28.29	RT	3' DASH 9' SKIP	6	60.95	0.25	8
671+62.24	671+97.69	RT	EDGE LINE	4	55.35	1	18
671+93.49	672+39.93	RT	STOP BAR	24	48.36	1	97
672+64.77	673+38.56	RT	EDGE LINE	4	74.55	1	25
673+38.56	673+69.30	RT	DOUBLE YELLOW MEDIAN	4	143.81	2	96
673+38.56	673+69.30	RT	MEDIAN STRIPES	12	61.80	1	62
673+16.41	673+16.41	RT	STOP BAR	24	12.00	1	24
673+60.10	673+60.10	LT / RT	STOP BAR	24	12.00	1	24
SW RAMP							
70+40.62	71+77.14	LT	EDGE LINE	4	163.13	1	54
70+79.30	71+64.32	RT	EDGE LINE	4	113.98	1	38
SE RAMP							
121+02.57	122+22.57	LT/RT	EDGE LINE	4	138.46	1	46
121+99.17	-	LT	LEFT ARROW	-	-	-	16
122+02.47	122+14.82	LT	SOLID WHITE LINE	8	12.35	1	8
MOT STAGE 2A							
SW RAMP							
70+07.48	71+79.37	LT	EDGE LINE	4	196.62	1	66
70+24.70	70+96.00	LT	SOLID WHITE LINE	8	78.98	1	53
SE RAMP							
119+89.07	122+78.52	LT	SOLID WHITE LINE	8	295.09	1	197
119+89.86	122+87.59	LT	EDGE LINE	4	307.63	1	103
119+94.65	121+23.51	LT/RT	EDGE LINE	4	128.88	1	43
121+90.79	122+79.45	LT/RT	SOLID WHITE LINE	8	129.45	1	86
120+75.40	-	LT	LEFT ARROW	-	-	-	16
120+75.40	-	LT	RIGHT ARROW	-	-	-	16
121+39.94	-	LT	RIGHT ARROW	-	-	-	16
121+99.63	-	LT	RIGHT ARROW	-	-	-	16
POST CONSTRUCTION							
IL 38							
620+38.03	636+53.60	LT	EDGE LINE	4	1615.97	1	539
620+38.05	636+51.28	LT	10' DASH 30' SKIP	6	1611.44	0.25	201
620+38.06	636+64.09	LT	EDGE LINE	4	1637.30	1	546
620+42.30	636+53.60	LT	EDGE LINE	4	1621.26	1	540
633+49.58	636+49.63	RT	EDGE LINE	4	316.41	1	105
634+33.25	-	RT	LEFT ARROW	-	-	-	16
636+13.92	-	RT	LEFT ARROW	-	-	-	16
636+51.31	636+51.31	RT	STOP BAR	24	37.49	1	75
637+55.89	641+79.11	LT	SOLID WHITE LINE	6	423.22	1	212
637+91.40	641+78.17	LT	SOLID WHITE LINE	6	386.72	1	193
637+91.40	645+39.69	LT	10' DASH 30' SKIP	6	748.29	0.25	94
637+91.40	637+91.40	LT	STOP BAR	24	24.25	1	49
637+96.20	648+76.92	LT	EDGE LINE	4	1088.26	1	363
638+38.18	647+74.79	LT	YELLOW MEDIAN	6	950.91	1	475
638+84.70	-	RT	LEFT ARROW	-	-	-	16
638+87.85	-	RT	RIGHT ARROW	-	-	-	16
640+51.28	-	RT	LEFT ARROW	-	-	-	16
640+52.07	-	RT	RIGHT ARROW	-	-	-	16
641+59.32	-	RT	LEFT ARROW	-	-	-	16
641+62.03	-	RT	RIGHT ARROW	-	-	-	16
SOUTH DEMENT RD							
49+42.06	50+55.92	LT	EDGE LINE	4	131.94	1	44
49+42.62	51+38.08	RT	EDGE LINE	4	215.54	1	72
51+23.44	51+88.50	LT	EDGE LINE	4	151.21	1	50
51+63.41	55+39.99	LT	10' DASH 30' SKIP	6	377.41	0.25	47
51+89.08	55+26.51	RT	EDGE LINE	4	350.83	1	117
52+10.14	55+15.26	LT	EDGE LINE	4	319.15	1	106
52+33.55	55+39.99	LT	DOUBLE YELLOW MEDIAN	4	651.54	2	434
52+33.55	55+39.99	LT	MEDIAN STRIPES	12	181.25	1	181
						SUBTOTAL	**5703**

STATION FROM	STATION TO	LT / RT	DESCRIPTION	LINE TYPE (IN.)	LENGTH (FEET)	MULTIPLIER	QUANTITY (SQ FT)
POST CONSTRUCTION							
SOUTH DEMENT RD							
53+82.50	-	RT	LEFT ARROW	-	-	-	16
55+01.40	55+64.15	LT	SOLID WHITE LINE	6	159.15	1	80
55+01.40	55+64.15	LT	MEDIAN STRIPES	12	125.47	1	125
55+11.27	-	RT	RIGHT ARROW	-	-	-	16
55+11.93	-	RT	THROUGH ARROW	-	-	-	16
55+22.00	55+54.88	RT	SOLID WHITE LINE	6	107.84	1	54
55+22.00	55+54.88	RT	MEDIAN STRIPES	12	85.54	1	86
55+41.08	55+41.08	RT	STOP BAR	24	28.28	1	57
55+26.51	55+26.51	RT	STOP BAR	24	23.83	1	48
NORTH DEMENT RD							
106+60.24	106+75.25	LT	STOP BAR	24	22.45	1	45
106+67.29	106+67.29	LT	STOP BAR	26	28.21	1	59
107+13.46	-	LT	RIGHT ARROW	-	-	-	16
108+01.44	-	LT	RIGHT ARROW	-	-	-	16
108+82.75	-	LT	RIGHT ARROW	-	-	-	16
111+05.26	112+26.70	LT/RT	YELLOW MEDIAN	6	243.55	2	244
111+05.26	112+26.70	LT/RT	MEDIAN STRIPES	12	21.00	1	21
NW RAMP							
46+60.88	55+14.00	LT	EDGE LINE	4	865.49	1	288
46+61.00	55+14.00	RT	EDGE LINE	4	856.38	1	285
SW RAMP							
78+59.58	82+55.30	RT	EDGE LINE	4	395.72	1	132
79+79.46	82+55.29	LT	EDGE LINE	4	285.03	1	95
NE RAMP							
			EDGE LINE	4		1	402
			EDGE LINE	4		1	399
SE RAMP							
106+79.33	TOTAL	92+30.69	EDGE LINE	4		1	457
106+79.38	118+79.79	LT	EDGE LINE	4	1210.41	1	403
						SUBTOTAL	**3375**
						TOTAL	**12594**

PAY CODE 78300202

MODEL: Schedule_8 [Sheet]
FILE NAME: N:\DOT\220628\CAD_Sheets\Civil\D284N98-sht-schedules.dgn

CHRISTOPHER B. BURKE ENGINEERING, LTD.
9575 W. Higgins Road, Suite 600
Rosemont, Illinois 60018
(847) 823-0500

USER NAME = nhowelllindgren	DESIGNED -	REVISED -	
	DRAWN -	REVISED -	
	CHECKED -	REVISED -	
PLOT DATE = 2/6/2025	DATE -	REVISED -	

STATE OF ILLINOIS
DEPARTMENT OF TRANSPORTATION

IL 38/I-39 INTERCHANGE IMPROVEMENTS
SCHEDULE OF QUANTITIES

SCALE: | SHEET 10 OF 22 SHEETS | STA. | TO STA.

F.A.* RTE.	SECTION	COUNTY	TOTAL SHEETS	SHEET NO.
*	141-1HBR-3 & (9, 10) R-3	OGLE	508	33
		CONTRACT NO. 64N98		
	ILLINOIS	FED. AID PROJECT		

*FAI ROUTE 39 (I-39) & FAP 567 (IL 38)

SLOTTED DRAIN REMOVAL

STATION FROM	STATION TO	LT / RT	QUANTITY (FEET)
MOT POST-STAGE			
IL 38			
645+87.91	650+67.93	LT / RT	480.0
PAY CODE X0325734		TOTAL	480

STUMP REMOVAL

STATION FROM	OFFSET	LT / RT	QUANTITY (EACH)
IL 38			
655+76.73	135.00	LT	1
655+79.69	132.66	LT	1
655+81.72	127.30	LT	1
655+84.76	135.00	LT	1
656+18.71	125.91	LT	1
659+14.50	121.12	LT	1
659+22.74	116.66	LT	1
659+29.56	124.00	LT	1
660+69.54	184.67	LT	1
661+02.03	179.04	LT	1
662+15.66	171.93	LT	1
662+17.78	177.40	LT	1
662+21.62	178.50	LT	1
668+45.54	175.38	LT	1
669+01.26	176.93	LT	1
PAY CODE X2010404		TOTAL	15

ISLAND REMOVAL

STATION FROM	STATION TO	LT/RT	AREA (SQ FT)
PERMANENT PAVEMENT			
IL 38			
636+58.40	636+79.63	RT	82
637+62.17	637+82.70	LT	447
658+03.39	658+24.32	LT/RT	102
PAY CODE X4402805		TOTAL	632

SHOULDER REMOVAL AND REPLACEMENT (SPECIAL)

STATION FROM	STATION TO	LT / RT	QUANTITY (FEET)
MOT PRE-STAGE			
IL 38			
649+26.86	649+32.86	LT	6.0
649+86.86	649+92.86	LT	6.0
649+90.30	649+96.30	RT	6.0
650+45.89	650+52.86	LT	6.0
650+50.30	650+56.30	RT	6.0
651+06.86	651+12.86	LT	6.0
651+10.30	651+16.30	RT	6.0
651+66.86	651+72.86	LT	6.0
651+70.30	651+76.30	RT	6.0
652+26.86	652+32.86	LT	6.0
652+30.30	652+36.30	RT	6.0
652+90.30	652+96.30	RT	6.0
653+50.30	653+56.30	RT	6.0
654+10.30	654+16.30	RT	6.0
MOT POST-STAGE			
646+40.94	646+55.94	LT	15.0
648+92.38	649+07.38	LT	15.0
PAY CODE X4404264		TOTAL	114

CLASS D PATCHES, TYPE II, 10 INCH (SPECIAL)

STATION FROM	STATION TO	LT / RT	LENGTH (FEET)	AVG WIDTH (FEET)	AREA (SQ FT)	AREA (SQ YD)
MOT PRE-STAGE						
IL 38						
641+51.87	-	LT	53	4	212	24
646+52.23	-	LT	34	4	136	15
649+02.49	-	LT	34	4	136	15
PAY CODE X4421763					TOTAL	54

REMOVE EXISTING FLARED END SECTION

STATION FROM	OFFSET	LT / RT	QUANTITY (EACH)
MOT PRE-STAGE			
646+51.75	63.25	LT	1.0
649+01.96	63.82	LT	1.0
MOT STAGE 1A			
663+90.00	149.00	LT	1.0
665+56.73	144.00	LT	1.0
MOT STAGE 1B			
639+09.86	73.43	LT	1.0
641+53.91	70.88	LT	1.0
644+04.33	65.55	LT	1.0
651+52.15	61.83	LT	1.0
MOT STAGE 2A			
663+89.00	146.00	RT	1.0
666+57.00	144.00	RT	1.0
676+00.00	85.00	RT	1.0
MOT STAGE 2B			
638+61.51	78.00	LT	1.0
PAY CODE X5427602		TOTAL	12

FENCE REMOVAL

STATION FROM	STATION TO	LT / RT	QUANTITY (FEET)
673+20.26	677+99.61	LT	525.0
674+34.02	676+57.68	RT	232.0
PAY CODE X6640104		TOTAL	757

REMOVING INLETS (SPECIAL)

STATION FROM	OFFSET	LT / RT	QUANTITY (EACH)
MOT POST-STAGE			
646+52.04	7.49	LT	1
646+52.33	6.09	RT	1
649+02.32	7.50	LT	1
649+02.69	6.17	RT	1
MOT STAGE 1A			
663+89.96	41.62	LT	1
666+56.73	41.78	LT	1
MOT STAGE 2A			
663+89.54	41.93	RT	1
666+56.67	41.80	RT	1
MOT STAGE 2B			
636+84.73	125.10	LT	1
PAY CODE X6050065		TOTAL	9

CONCRETE MEDIAN (SPECIAL)

STATION FROM	STATION TO	LT / RT	QUANTITY (SQ FT)
MOT PRE-STAGE			
IL 38			
645+75.11	645+83.61	LT / RT	185.0
650+74.10	650+82.59	LT / RT	189.0
656+58.94	656+67.44	LT / RT	185.0
677+02.55	677+10.98	LT / RT	221.0
681+37.07	681+45.57	LT / RT	217.0
688+23.65	688+32.57	LT / RT	256.0
PAY CODE X6060714		TOTAL	1,253

FLEXIBLE DELINEATORS

STATION FROM	STATION TO	LT / RT	QUANTITY (EACH)
MOT STAGE 1A			
648+95.03	652+00.64	RT	62
MOT STAGE 1C			
650+23.81	657+43.59	RT	145
MOT STAGE 1D			
659+67.26	662+01.45	LT	48
667+56.24	670+38.00	LT	58
676+34.64	680+65.14	LT	87
PAY CODE X6350108			400

CONCRETE BARRIER WALL (SPECIAL)

STATION FROM	STATION TO	LT / RT	QUANTITY (FEET)
661+71.97	663+86.47	LT	214.5
661+71.97	663+86.47	RT	214.5
666+59.47	668+54.47	LT	195.0
666+59.47	668+54.47	RT	195.0
PAY CODE X6370050		TOTAL	819

TEMPORARY PAVEMENT

STATION FROM	STATION TO	LT / RT	AREA (SQ FT)	AREA (SQ YD)
PRE STAGE				
IL 38				
645+75.10	647+00.00	LT/RT	2,545.7	282.9
647+00.00	650+82.54	LT/RT	8,237.4	915.3
652+98.93	658+12.33	RT	5,188.1	576.5
655+50.00	656+50.00	LT	1,007.0	111.9
655+50.00	656+50.00	RT	1,013.0	112.6
656+66.80	658+40.47	LT/RT	3,338.2	370.9
658+00.77	658+29.90	LT	311.0	34.6
658+55.20	662+50	RT	5,801.6	644.6
662+50.00	663+02.56	RT	322.1	35.8
667+04.29	671+90.83	RT	5,190.8	576.8
672+00.00	677+11.70	LT/RT	11,124.4	1,236.0
672+65.84	677+28.08	RT	4,492.9	499.2
681+37.06	685+09.30	LT/RT	7,002.3	778.0
686+00.00	688+31.69	LT/RT	6,028.2	669.8
NW RAMP				
53+36.00	60+39.07	LT	6,587.5	731.9
SW RAMP				
70+93.00	73+15.83	LT	2,585.3	287.3
73+15.83	78+95.31	LT	5,688.9	632.1
SE RAMP				
686+00.00	688+31.69	LT/RT	6,028.2	669.8
STAGE 1A				
IL 38				
652+38.51	657+39.28	LT	8,484.8	942.8
658+49.73	662+50.00	LT	2,578.1	286.5
662+50.00	662+53.55	LT	28.7	3.2
672+89.05	679+60.00	LT	8,659.1	962.1
CONTINGENCY			13.2%	1,499.6
PAY CODE Z0062456			TOTAL	12,860

BOLLARDS

STATION	OFFSET	LT / RT	QUANTITY (EACH)
PRE-STAGE CONSTRUCTION			
638+06.82	81.39	LT	1
657+57.64	65.37	LT	1
657+91.36	38.45	LT	1
658+13.71	25.58	LT	1
658+72.50	4.18	LT	1
671+50.72	4.18	LT	1
672+09.57	25.60	LT	1
672+60.63	51.45	LT	1
672+95.07	80.91	LT	1
PAY CODE Z0004002		TOTAL	9

SLOTTED DRAIN 12" WITH VARIABLE SLOT

STATION FROM	STATION TO	LT / RT	QUANTITY (FEET)
MOT PRE-STAGE			
IL 38			
645+87.91	650+67.93	LT / RT	480.0
PAY CODE Z0065740		TOTAL	480

MODEL: Schedule_9 [Sheet]
FILE NAME: N:\IDOT\22028\CAD_Sheets\Civil\D264N98-sht-schedules.dgn

CHRISTOPHER B. BURKE ENGINEERING, LTD.
9575 W. Higgins Road, Suite 600
Rosemont, Illinois 60018
(847) 823-0500

USER NAME = cward	DESIGNED -	REVISED -	
	DRAWN -	REVISED -	
	CHECKED -	REVISED -	
PLOT DATE = 2/7/2025	DATE -	REVISED -	

STATE OF ILLINOIS
DEPARTMENT OF TRANSPORTATION

IL 38/I-39 INTERCHANGE IMPROVEMENTS
SCHEDULE OF QUANTITIES

SCALE: SHEET 11 OF 22 SHEETS STA. TO STA.

F.A.* RTE.	SECTION	COUNTY	TOTAL SHEETS	SHEET NO.
*	141-1HBR-3 & (9, 10) R-3	OGLE	508	34
		CONTRACT NO. 64N98		
	ILLINOIS	FED. AID PROJECT		

*FAI ROUTE 39 (I-39) & FAP 567 (IL 38)

EXISTING SIGNS (REMOVALS)																		
								72400310	72400320	72400330	72400745	73500300	73600100	73700100	73700200	73700300	73800005	
LOCATION	SIGN CODE (MUTCD OR IDOT)	STATION	LT/RT	DESCRIPTION	SIGN PANEL WIDTH	SIGN PANEL HEIGHT	SIGN PANEL AREA	REMOVE SIGN PANEL - TYPE 1	REMOVE SIGN PANEL - TYPE 2	REMOVE SIGN PANEL - TYPE 3	*REMOVE AND RELOCATE SIGN PANEL -TYPE 3	*REMOVE AND RELOCATE GROUND MOUNTED SIGN SUPPORT	REMOVE OH SIGN STRUCTURE - SPAN	REMOVE GROUND MOUNTED SIGN SUPPORT	REMOVE CONCRETE FOUNDATION - GROUND MOUNT	REMOVE CONCRETE FOUNDATION - OVERHEAD	REMOVE STRUCTURAL STEEL SUPPORT FOR OVERHEAD SIGN STRUCTURE - SPAN	REMARKS
(ROAD)		(STA)			(INCH)	(INCH)	(SQ FT)	(SQ FT)	(SQ FT)	(SQ FT)	(SQ FT)	(EACH)	(EACH)	(EACH)	(EACH)	(EACH)	(EACH)	
DEMENT RD	M4-5	54+50	RT	TO (BLUE)	24	12	2.0	2.0										
DEMENT RD	M1-1	54+50	RT	INTERSTATE 39	24	24	4.0	4.0										
DEMENT RD	M6-1R	54+50	RT	RIGHT ARROW (BLUE)	21	15	2.2	2.2										
DEMENT RD	D3-1	55+00	LT	STREET SIGN (GREEN)	60	18	7.5	7.5										IL RTE 38
DEMENT RD	R3-8	55+00	LT	ADVANCE LANE	36	30	7.5	7.5										TWO ARROW
DEMENT RD	D3-1	106+50	RT	STREET SIGN (GREEN)	60	18	7.5	7.5										IL RTE 38
DEMENT RD	M4-5	107+50	RT	TO (BLUE)	24	12	2.0	2.0										
DEMENT RD	M1-1	107+50	RT	INTERSTATE 39	24	24	4.0	4.0										
DEMENT RD	M6-1L	107+50	RT	LEFT ARROW (BLUE)	21	15	2.2	2.2										
DEMENT RD	R8-3a	109+00	LT	NO PARKING	24	30	5.0	5.0										
DEMENT RD	R8-3a	111+00	RT	NO PARKING	24	30	5.0	5.0										
DEMENT RD	R8-3a	109+00	RT	NO PARKING	24	30	5.0	5.0										
IL 38	W3-3	631+07	RT	SIGNAL AHEAD	36	36	9.0	9.0										
IL 38	W16-8P	631+07	RT	STREET SIGN (YELLOW)	36	9	2.3	2.3										
IL 38	D3-1	636+05	LT	STREET SIGN (GREEN)	60	18	7.5	7.5										DEMENT RD
IL 38	R4-7	636+10	LT/RT	KEEP RIGHT	24	30	5.0	5.0										
IL 38	M1-I100	638+25	RT	STATE ROUTE - IL 38	24	24	4.0	4.0										
IL 38	M3-2P	638+25	RT	EAST (WHITE)	24	12	2.0	2.0										
IL 38	D3-1	638+25	RT	STREET SIGN (GREEN)	60	18	7.5	7.5										DEMENT RD
IL 38	R4-7	639+10	LT/RT	KEEP RIGHT	24	30	5.0	5.0										
IL 38	R2-1	640+40	RT	SPEED LIMIT - 45 MPH	30	36	7.5	7.5										
IL 38	M2-1P	645+25	RT	JCT (BLUE)	21	15	2.2	2.2										
IL 38	M1-1	645+25	RT	INTERSTATE 39	24	24	4.0	4.0										
IL 38	M2-1P	645+25	RT	JCT (WHITE)	21	15	2.2	2.2										
IL 38	M1-4	645+25	RT	US ROUTE 51	24	24	4.0	4.0										
IL 38	W3-3	645+75	LT	SIGNAL AHEAD	36	36	9.0	9.0										
IL 38	W16-8P	645+75	LT	STREET SIGN (YELLOW)	36	9	2.3	2.3										
IL 38	M3-1P	650+40	RT	NORTH (BLUE)	24	12	2.0	2.0										
IL 38	M1-1	650+40	RT	INTERSTATE 39	24	24	4.0	4.0										
IL 38	M6-3P	650+40	RT	STRAIGHT ARROW (BLUE)	21	15	2.2	2.2										
IL 38	M3-3P	650+40	RT	SOUTH (BLUE)	24	12	2.0	2.0										
IL 38	M1-1	650+40	RT	INTERSTATE 39	24	24	4.0	4.0										
IL 38	M5-1R	650+40	RT	RIGHT ARROW (BLUE)	21	15	2.2	2.2										
IL 38	M3-1P	650+40	RT	NORTH (WHITE)	24	12	2.0	2.0										
IL 38	M1-4	650+40	RT	US ROUTE 51	24	24	4.0	4.0										
IL 38	M6-3P	650+40	RT	STRAIGHT ARROW (WHITE)	21	15	2.2	2.2										
IL 38	M3-3P	650+40	RT	SOUTH (WHITE)	24	12	2.0	2.0										
IL 38	M1-4	650+40	RT	US ROUTE 51	24	24	4.0	4.0										
IL 38	M5-1R	650+40	RT	RIGHT ARROW (WHITE)	21	15	2.2	2.2										
IL 38	R2-1	652+30	LT	SPEED LIMIT - 45 MPH	30	36	7.5	7.5										
IL 38	M3-4P	656+40	LT	WEST (WHITE)	24	12	2.0	2.0										
IL 38	M1-I100	656+40	LT	STATE ROUTE - IL 38	24	24	4.0	4.0										
IL 38	XM-31	656+40	LT	HISTORIC ROUTE	24	30	5.0	5.0										
IL 38	-	656+70	LT/RT	GUIDE SIGNS														OHSS
IL 38	-	656+70	LT/RT	GUIDE SIGNS									1		2	2		OHSS
IL 38	-	656+70	LT/RT	GUIDE SIGNS														OHSS
IL 38	-	657+25	RT	GUIDE SIGN (GREEN)	132	150	137.5				137.5	2			2			ROCKFORD LASALLE, SIGN IS ALSO RELOCATED FOR STAGING. SEE PROPOSED SIGNING PLANS.
IL 38	R4-7	658+25	RT	KEEP RIGHT	24	30	5.0	5.0										MEDIAN
IL 38	R3-2	658+25	LT	NO LEFT TURN	30	30	6.3	6.3										
IL 38	R4-7	658+95	RT	KEEP RIGHT	24	30	5.0	5.0										MEDIAN
IL 38	R3-1	658+80	LT	NO RIGHT TURN	30	30	6.3	6.3										
IL 38	R2-1	659+50	RT	SPEED LIMIT - 45 MPH	30	36	7.5	7.5										
IL 38	M3-2P	659+50	RT	EAST (WHITE)	24	12	2.0	2.0										
IL 38	M1-I100	659+50	RT	STATE ROUTE - IL 38	24	24	4.0	4.0										
IL 38	R3-2	659+00	LT	NO LEFT TURN	30	30	6.3	6.3										MEDIAN
IL 38	R3-1	659+75	LT	NO RIGHT TURN	30	30	6.3	6.3										ATTACHED TO GROUND MOUNT
IL 38	-	659+75	LT	GUIDE SIGN (GREEN)	120	84	70.0			70.0				2	2			S TO LASALLE
IL 38	M3-1P	662+95	RT	NORTH (BLUE)	24	12	2.0	2.0										
IL 38	M3-1P	662+95	RT	NORTH (WHITE)	24	12	2.0	2.0										
IL 38	M1-1	662+95	RT	INTERSTATE 39	24	24	4.0	4.0										
IL 38	M1-4	662+95	RT	US ROUTE 51	24	24	4.0	4.0										
IL 38	M5-1L	662+95	RT	LEFT ARROW (BLUE)	21	15	2.2	2.2										
IL 38	M5-1L	662+95	RT	LEFT ARROW (WHITE)	21	15	2.2	2.2										
IL 38	WSPC	663+90	LT	EMERGENCY ROUTE (YELLOW)	24	12	2.0	2.0										
IL 38	M1-1	663+90	LT	INTERSTATE 39	24	24	4.0	4.0										
IL 38	M6-3P	663+90	LT	STRAIGHT ARROW (BLUE)	21	15	2.2	2.2										
IL 38	W3-3	663+90	RT	SIGNAL AHEAD	36	36	9.0	9.0										
IL 38	R3-8	667+50	RT	ADVANCE LANE	48	30	10.0		10.0									THREE ARROW

*REMOVAL OF GROUND MOUNTED SIGN FOR MAINTENANCE OF TRAFFIC. DRILLED SHAFT CONCRETE FOUNDATIONS INCLUDED IN PROPOSED SIGNAGE SCHEDULES.

MODEL: SHT_PLAN
FILE NAME: C:\Bentley\CONNECT10111\Organization\Civil\IDOT_Standards\Cell\IDOT_Sheets.cel

HBM ENGINEERING GROUP, LLC

USER NAME =	DESIGNED - KAO	REVISED -	
	DRAWN - KAO	REVISED -	
	CHECKED - AMI	REVISED -	
PLOT DATE = 2/6/2025	DATE - 2/6/2025	REVISED -	

STATE OF ILLINOIS
DEPARTMENT OF TRANSPORTATION

SCHEDULE OF QUANTITIES
IL 38

SCALE: | SHEET 12 OF 22 SHEETS | STA. | TO STA.

F.A.* RTE.	SECTION	COUNTY	TOTAL SHEETS	SHEET NO.
*	141-1HBR-3 & (9,10) R-3	OGLE	508	35
		CONTRACT NO. 64N98		
	ILLINOIS	FED. AID PROJECT		

*FAI ROUTE 39 (I-39) & FAP 567 (IL 38)

								EXISTING SIGNS (REMOVALS)										
								72400310	72400320	72400330	72400745	73500300	73600100	73700100	73700200	73700300	73800005	
LOCATION	SIGN CODE (MUTCD OR IDOT)	STATION	LT/RT	DESCRIPTION	SIGN PANEL WIDTH	SIGN PANEL HEIGHT	SIGN PANEL AREA	REMOVE SIGN PANEL - TYPE 1	REMOVE SIGN PANEL - TYPE 2	REMOVE SIGN PANEL - TYPE 3	*REMOVE AND RELOCATE SIGN PANEL -TYPE 3	*REMOVE AND RELOCATE GROUND MOUNTED SIGN SUPPORT	REMOVE OH SIGN STRUCTURE - SPAN	REMOVE GROUND MOUNTED SIGN SUPPORT	REMOVE CONCRETE FOUNDATION - GROUND MOUNT	REMOVE CONCRETE FOUNDATION - OVERHEAD	REMOVE STRUCTURAL STEEL SUPPORT FOR OVERHEAD SIGN STRUCTURE - SPAN	REMARKS
(ROAD)		(STA)			(INCH)	(INCH)	(SQ FT)	(SQ FT)	(SQ FT)	(SQ FT)	(SQ FT)	(EACH)	(EACH)	(EACH)	(EACH)	(EACH)	(EACH)	
IL 38	M3-3P	668+70	LT	SOUTH (BLUE)	24	12	2.0	2.0										
IL 38	M3-3P	668+70	LT	SOUTH (WHITE)	24	12	2.0	2.0										
IL 38	M1-1	668+70	LT	INTERSTATE 39	24	24	4.0	4.0										
IL 38	M1-4	668+70	LT	US ROUTE 51	24	24	4.0	4.0										
IL 38	M5-1L	668+70	LT	LEFT ARROW (BLUE)	21	15	2.2	2.2										
IL 38	M5-1L	668+70	LT	LEFT ARROW (WHITE)	21	15	2.2	2.2										
IL 38	M4-5P	668+70	LT	TO (BLUE)	24	12	2.0	2.0										
IL 38	M4-15P	668+70	LT	TOLL (YELLOW)	24	12	2.0	2.0										
IL 38	M1-1	668+70	LT	INTERSTATE 88	24	24	4.0	4.0										
IL 38	M5-1L	668+70	LT	LEFT ARROW (BLUE)	21	15	2.2	2.2										
IL 38	R3-8	667+50	RT	ADVANCE LANE	48	30	10.0		10.0									THREE ARROW
IL 38	R2-1	670+50	LT	SPEED LIMIT - 45 MPH	30	36	7.5	7.5										
IL 38	-	671+35	RT	GUIDE SIGN (GREEN)	132	66	60.5				60.5	2			2			N TO ROCKFORD, SIGN IS ALSO RELOCATED FOR STAGING. SEE PROPOSED SIGNING PLANS.
IL 38	R4-7	671+00	RT/LT	KEEP RIGHT	24	30	5.0	5.0										
IL 38	R6-1l	671+30	LT	ONE WAY	54	18	6.8	6.8										
IL 38	D3-1	671+30	LT	STREET SIGN (GREEN)	60	18	7.5	7.5										
IL 38	R3-1	671+35	RT	NO RIGHT TURN	30	30	6.3	6.3										ATTACHED TO GROUND MOUNT
IL 38	R3-2	671+35	RT	NO LEFT TURN	30	30	6.3	6.3										ATTACHED TO GROUND MOUNT
IL 38	D3-1	671+50	RT	STREET SIGN (GREEN)	60	18	7.5	7.5										
IL 38	R4-7	672+50	RT/LT	KEEP RIGHT	24	30	5.0	5.0										
IL 38	R3-2	672+50	LT	NO LEFT TURN	30	30	6.3	6.3										
IL 38	-	673+00	LT	GUIDE SIGN (GREEN)	126	150	131.3			131.3				2	2			S LASALLE/N ROCK
IL 38	D3-1	673+50	LT	STREET SIGN (GREEN)	60	18	7.5	7.5										
IL 38	R6-1r	673+50	RT	ONE WAY	54	18	6.8	6.8										
IL 38	-	673+58	LT/RT	GUIDE SIGNS														OHSS
IL 38	-	673+58	LT/RT	GUIDE SIGNS									1			2	2	OHSS
IL 38	-	673+58	LT/RT	GUIDE SIGNS														OHSS
IL 38	M3-4P	674+40	RT	EAST (WHITE)	24	12	2.0	2.0										
IL 38	M1-I100	674+40	RT	STATE ROUTE - IL 38	24	24	4.0	4.0										
IL 38	XM-31	674+40	RT	HISTORIC ROUTE (WHITE)	24	30	5.0	5.0										
IL 38	IL-I107A	674+40	RT	ADOPT A HIGHWAY (GREEN)	30	36	7.5	7.5										
IL 38	IL-I107B	674+40	RT	ADOPT A HIGHWAY (GREEN)	30	18	3.8	3.8										
IL 38	R2-1	674+50	RT	SPEED LIMIT - 45 MPH	30	36	7.5	7.5										
IL 38	M4-5P	675+40	LT	TO (BLUE)	24	12	2.0	2.0										
IL 38	M4-15P	675+40	LT	TOLL (BLUE)	24	12	2.0	2.0										
IL 38	M1-1	675+40	LT	INTERSTATE 88	24	24	4.0	4.0										
IL 38	M5-1P	675+40	LT	STRAIGHT ARROW (BLUE)	21	15	2.2	2.2										
IL 38	M3-3P	677+10	LT	SOUTH (BLUE)	24	12	2.0	2.0										
IL 38	M1-1	677+10	LT	INTERSTATE 39	24	24	4.0	4.0										
IL 38	M6-3P	677+10	LT	STRAIGHT ARROW (BLUE)	21	15	2.2	2.2										
IL 38	M3-1P	677+10	LT	NORTH (BLUE)	24	12	2.0	2.0										
IL 38	M1-1	677+10	LT	INTERSTATE 39	24	24	4.0	4.0										
IL 38	M5-1R	677+10	LT	RIGHT ARROW (BLUE)	21	15	2.2	2.2										
IL 38	M3-3P	677+10	LT	SOUTH (WHITE)	24	12	2.0	2.0										
IL 38	M1-4	677+10	LT	US ROUTE 51	24	24	4.0	4.0										
IL 38	M6-3P	677+10	LT	STRAIGHT ARROW (WHITE)	21	15	2.2	2.2										
IL 38	M3-1P	677+10	LT	NORTH (WHITE)	24	12	2.0	2.0										
IL 38	M1-4	677+10	LT	US ROUTE 51	24	24	4.0	4.0										
IL 38	M5-1R	677+10	LT	RIGHT ARROW (WHITE)	21	15	2.2	2.2										
IL 38	W3-3	682+70	LT	SIGNAL AHEAD	36	36	9.0	9.0										
IL 38	R2-1	692+30	LT	SPEED LIMIT - 45 MPH	30	36	7.5	7.5										
IL 38	R2-1	692+30	RT	SPEED LIMIT - 55 MPH	30	36	7.5	7.5										
IL 38	W6-1	696+00	LT	DIVIDED HIGHWAY (YELLOW)	36	36	9.0	9.0										
IL 38	W6-3	696+00	RT	TWO WAY TRAFFIC	36	36	9.0	9.0										
I-39	R5-I100	11+50	RT	PROHIBITED (WHITE)	48	60	20.0		20.0									
I-39	W9-1r	11+50	RT	RIGHT LANE ENDS (YELLOW)	36	36	9.0	9.0										NE ENT RAMP
I-39	W4-2r	14+75	RT	MERGE TO THE LEFT (YELLOW)	36	36	9.0	9.0										NE ENT RAMP
I-39	W4-2r	14+75	LT	MERGE TO THE LEFT (YELLOW)	36	36	9.0	9.0										NE ENT RAMP
I-39	-	42+30	RT	GUIDE SIGNS	150	180	187.5			187.5			1			2	2	OHSS
I-39	-	42+30	RT	GUIDE SIGNS	156	120	130.0			130.0								OHSS
I-39	W13-3	46+80	RT	RAMP SPEED - 40 MPH (YELLOW)	48	60	20.0		20.0									
I-39	E5-1a	47+60	LT	EXIT 99 (GREEN)	78	60	32.5			32.5								
I-39	-	49+35	RT	ATTRACTION SIGN (BLUE) - RAMP PANEL	150	96	100.0			100.0				2	2			
I-39	-	51+20	RT	LODGING SIGN (BLUE) - RAMP PANEL	150	96	100.0			100.0				2	2			
I-39	W3-1	52+50	RT	STOP AHEAD (YELLOW)	36	36	9.0	9.0										
I-39	-	53+90	RT	FOOD SIGN (BLUE) - RAMP PANEL	150	96	100.0			100.0				2	2			
I-39	-	55+10	RT	DESTINATION SIGN (GREEN)- RAMP PANEL	96	48	32.0			32.0				2	2			DEKALB/ROCHELLE
I-39	-	57+50	RT	GAS SIGN (BLUE) - RAMP PANEL	150	96	100.0			100.0				2	2			
I-39	D9-7	57+50	RT	E-85/BIODIESEL (BLUE)	18	18	2.3	2.3										

*REMOVAL OF GROUND MOUNTED SIGN FOR MAINTENANCE OF TRAFFIC. DRILLED SHAFT CONCRETE FOUNDATIONS INCLUDED IN PROPOSED SIGNAGE SCHEDULES.

MODEL: SHT_PLAN
FILE NAME: C:\Bentley\CONNECT10\11\Organization-Civil\IDOT_Standards\Cell\IDOT_Sheets.cel

HBM ENGINEERING GROUP, LLC

USER NAME =	DESIGNED - KAO	REVISED -	
	DRAWN - KAO	REVISED -	
	CHECKED - AMI	REVISED -	
PLOT DATE = 2/6/2025	DATE - 2/6/2025	REVISED -	

STATE OF ILLINOIS
DEPARTMENT OF TRANSPORTATION

SCHEDULE OF QUANTITIES
IL 38

SCALE: | SHEET 13 OF 22 SHEETS | STA. | TO STA.

F.A.* RTE.	SECTION	COUNTY	TOTAL SHEETS	SHEET NO.
*	141-1HBR-3 & (9,10) R-3	OGLE	508	36
		CONTRACT NO. 64N98		
	ILLINOIS	FED. AID PROJECT		

*FAI ROUTE 39 (I-39) & FAP 567 (IL 38)

EXISTING SIGNS (REMOVALS)

LOCATION	SIGN CODE (MUTCD OR IDOT)	STATION	LT/RT	DESCRIPTION	SIGN PANEL WIDTH	SIGN PANEL HEIGHT	SIGN PANEL AREA	72400310 REMOVE SIGN PANEL - TYPE 1	72400320 REMOVE SIGN PANEL - TYPE 2	72400330 REMOVE SIGN PANEL - TYPE 3	72400745 *REMOVE AND RELOCATE SIGN PANEL -TYPE 3	73500300 *REMOVE AND RELOCATE GROUND MOUNTED SIGN SUPPORT	73600100 REMOVE OH SIGN STRUCTURE - SPAN	73700100 REMOVE GROUND MOUNTED SIGN SUPPORT	73700200 REMOVE CONCRETE FOUNDATION - GROUND MOUNT	73700300 REMOVE CONCRETE FOUNDATION - OVERHEAD	73800005 REMOVE STRUCTURAL STEEL SUPPORT FOR OVERHEAD SIGN STRUCTURE - SPAN	REMARKS
(ROAD)		(STA)			(INCH)	(INCH)	(SQ FT)	(SQ FT)	(SQ FT)	(SQ FT)	(SQ FT)	(EACH)	(EACH)	(EACH)	(EACH)	(EACH)	(EACH)	
I-39 / NW RAMP	M6-1R	57+50	RT	RIGHT ARROW (BLUE)	12	6	0.5	0.5										
I-39 / NW RAMP	D9-2	58+50	LT	HOSPITAL (BLUE)	24	24	4.0	4.0										
I-39 / NW RAMP	M6-1R	58+50	LT	RIGHT ARROW (BLUE)	21	15	2.2	2.2										
I-39 / NW RAMP	R6-1l	60+00	LT	ONE WAY	54	18	6.8	6.8										
I-39 / NW RAMP	R6-1r	60+00	LT	ONE WAY	54	18	6.8	6.8										
I-39 / NW RAMP	R5-1	60+00	RT	DO NOT ENTER	48	48	16.0		16.0									NW OFF RAMP
I-39 / NW RAMP	-	60+00	RT	RED STRIP	2	48	0.7		0.7									
I-39 / NW RAMP	R5-1	60+00	LT	DO NOT ENTER	48	48	16.0		16.0									NW OFF RAMP
I-39 / NW RAMP	R1-1	60+00	RT	STOP	48	48	16.0		16.0									NW OFF RAMP
I-39 / NW RAMP	R1-1	60+00	RT	STOP	48	48	16.0		16.0									NW OFF RAMP
I-39 / SW RAMP	R5-l100	70+50	RT	PROHIBITED (WHITE)	48	60	20.0		20.0									
I-39 / SE RAMP	W13-3	105+75	RT	RAMP SPEED (YELLOW) - 40 MPH	48	60	20.0		20.0									
I-39 / SE RAMP	E5-1a	107+50	LT	EXIT 99 (GREEN)	78	60	32.5		32.5									
I-39 / SE RAMP	WSPC	109+00	LT	EMERGENCY ROUTE (YELLOW)	24	12	2.0	2.0										
I-39 / SE RAMP	M1-1	109+00	LT	INTERSTATE 39	24	24	4.0	4.0										
I-39 / SE RAMP	M5-1L	109+00	LT	LEFT ARROW (BLUE)	21	15	2.2	2.2										
I-39 / SE RAMP	R5-1a	109+00	LT	WRONG WAY	42	30	8.8	8.8										
I-39 / SE RAMP	R5-1a	109+00	RT	WRONG WAY	42	30	8.8	8.8										
I-39 / SE RAMP	-	109+00	RT	ATTRACTIONS SIGN (BLUE)- RAMP PANEL	150	96	100.0		100.0					2	2			
I-39 / SE RAMP	W1-8	109+27	LT	CHEVRON - (RIGHT)	30	36	7.5	7.5										
I-39 / SE RAMP	W1-8	110+87	LT	CHEVRON - (RIGHT)	30	36	7.5	7.5										
I-39 / SE RAMP	W3-3	111+00	RT	SIGNAL AHEAD (YELLOW)	36	36	9.0	9.0										
I-39 / SE RAMP	-	111+10	RT	LODGING SIGN (BLUE) - RAMP PANEL	150	96	100.0		100.0					2	2			
I-39 / SE RAMP	W1-8	112+47	LT	CHEVRON - (RIGHT)	30	36	7.5	7.5										
I-39 / SE RAMP	W1-8	114+07	LT	CHEVRON - (RIGHT)	30	36	7.5	7.5										
I-39 / SE RAMP	R3-8	115+00	RT	ADVANCE LANE	36	30	7.5	7.5										THREE ARROW
I-39 / SE RAMP	R3-8	115+00	LT	ADVANCE LANE	36	30	7.5	7.5										THREE ARROW
I-39 / SE RAMP	-	115+00	RT	DESTINATION SIGN (GREEN)- RAMP PANEL	96	48	32.0		32.0					2	2			
I-39 / SE RAMP	W3-3	117+00	RT	SIGNAL AHEAD (YELLOW)	36	36	9.0	9.0										
I-39 / SE RAMP	W1-8	117+32	RT	CHEVRON - (LEFT)	30	36	7.5	7.5										
I-39 / SE RAMP	-	118+00	RT	FOOD SIGN (BLUE) - RAMP PANEL	150	96	100.0		100.0					2	2			
I-39 / SE RAMP	W1-8	118+52	RT	CHEVRON - (LEFT)	30	36	7.5	7.5										
I-39 / SE RAMP	-	120+50	RT	GAS SIGN (BLUE) - RAMP PANEL	150	96	100.0		100.0					2	2			
I-39 / SE RAMP	D9-7	120+50	RT	E-85/BIODIESEL (BLUE)	18	18	2.3	2.3										
I-39 / SE RAMP	M6-1L	120+50	RT	LEFT ARROW (BLUE)	12	6	0.5	0.5										
I-39 / SE RAMP	R5-1a	120+50	LT	WRONG WAY	42	30	8.8	8.8										
I-39 / SE RAMP	-	120+50	LT	RED STRIP	2	48	0.7	0.7										
I-39 / SE RAMP	R5-1a	120+50	RT	WRONG WAY	42	30	8.8	8.8										
I-39 / SE RAMP	-	120+50	RT	RED STRIP	2	48	0.7	0.7										
I-39 / SE RAMP	WSPC	120+50	LT	EMERGENCY ROUTE (YELLOW)	24	12	2.0	2.0										
I-39 / SE RAMP	M1-1	120+50	LT	INTERSTATE 39	24	24	4.0	4.0										
I-39 / SE RAMP	M6-1L	120+50	LT	LEFT ARROW (BLUE)	21	15	2.2	2.2										
I-39 / SE RAMP	D9-2	121+50	RT	HOSPITAL	24	24	4.0	4.0										
I-39 / SE RAMP	M6-1L	121+50	RT	LEFT ARROW (BLUE)	21	15	2.2	2.2										
I-39 / SE RAMP	R5-1	122+00	RT	DO NOT ENTER	48	48	16.0		16.0									SE OFF RAMP
I-39 / SE RAMP	-	122+00	RT	RED STRIP	2	48	0.7	0.7										
I-39 / SE RAMP	R5-1	122+00	LT	DO NOT ENTER	48	48	16.0		16.0									SE OFF RAMP
I-39 / SE RAMP	-	122+00	LT	RED STRIP	2	48	0.7	0.7										
						TOTALS		674.0	662.0	984.0	198.0	4	3	24	28	6	6	

*REMOVAL OF GROUND MOUNTED SIGN FOR MAINTENANCE OF TRAFFIC. DRILLED SHAFT CONCRETE FOUNDATIONS INCLUDED IN PROPOSED SIGNAGE SCHEDULES.

MODEL: SHT_PLAN
FILE NAME: C:\Bentley\CONNECT10111\Organization-Civil\IDOT_Standards\Cell\IDOT_Sheets.cel

HBM ENGINEERING GROUP, LLC

USER NAME =	DESIGNED - KAO	REVISED -	
	DRAWN - KAO	REVISED -	
	CHECKED - AMI	REVISED -	
PLOT DATE = 2/6/2025	DATE - 2/6/2025	REVISED -	

STATE OF ILLINOIS
DEPARTMENT OF TRANSPORTATION

SCHEDULE OF QUANTITIES
IL 38

SCALE: | SHEET 14 OF 22 SHEETS | STA. | TO STA.

F.A.* RTE.	SECTION	COUNTY	TOTAL SHEETS	SHEET NO.
*	141-1HBR-3 & (9,10) R-3	OGLE	508	37
		CONTRACT NO. 64N98		
	ILLINOIS	FED. AID PROJECT		

*FAI ROUTE 39 (I-39) & FAP 567 (IL 38)

PROPOSED, RELOCATIONS, & REINSTALLATIONS

LOCATION	SIGN CODE (MUTCD OR IDOT)	STATION	LT/RT	DESCRIPTION	MOUNTING TYPE	SIGN PANEL WIDTH	SIGN PANEL HEIGHT	SIGN PANEL AREA	POST ONE LENGTH	POST TWO LENGTH	72000100 SIGN PANEL - TYPE 1	72000200 SIGN PANEL - TYPE 2	72000300 SIGN PANEL - TYPE 3	72400710 RELOCATE SIGN PANEL - TYPE 1	72700100 *STRUCTURAL STEEL SIGN SUPPORT BREAKAWAY	72800100 TELESCOPING STEEL SIGN SUPPORT	73000100 WOOD SIGN SUPPORT	73400200 DRILLED SHAFT CONCRETE FOUNDATIONS	X7200075 REMOVE AND REINSTALL SIGN PANEL	REMARKS
(ROAD)		(STA)				(INCH)	(INCH)	(SQ FT)	(FOOT)	(FOOT)	(SQ FT)	(SQ FT)	(SQ FT)	(SQ FT)	(POUND)	(FOOT)	(FOOT)	(CU. YD)	(SQ FT)	
DEMENT RD	M4-5P	54+50	RT	TO (BLUE)	UTILITY POLE	24	12	2.0			2.0									
DEMENT RD	M1-1	54+50	RT	INTERSTATE 39	UTILITY POLE	24	24	4.0			4.0									
DEMENT RD	M6-1R	54+50	RT	RIGHT ARROW (BLUE)	UTILITY POLE	21	15	2.2			2.2									
DEMENT RD	M4-5P	107+50	LT	TO (BLUE)	UTILITY POLE	24	12	2.0			2.0									
DEMENT RD	M1-1	107+50	LT	INTERSTATE 39	UTILITY POLE	24	24	4.0			4.0									
DEMENT RD	M6-1L	107+50	LT	LEFT ARROW (BLUE)	UTILITY POLE	21	15	2.2			2.2									
DEMENT RD	R3-8	109+20	LT	ADVANCE LANE (WHITE)	WOOD POST	48	30	10.0	16			10.0					16			
IL 38	R2-1	628+50	RT	SPEED LIMIT - 45 MPH	WOOD POST	30	36	7.5	16					7.5			16			RELOCATE
IL 38	W3-3	631+07	RT	TRAFFIC LIGHT AHEAD (YELLOW)	WOOD POST	36	36	9.0	18		9.0						18			
IL 38	W16-8P	631+07	RT	STREET NAME (YELLOW)	WOOD POST	36	9	2.3			2.3									DEMENT RD
IL 38	R2-1	631+20	LT	SPEED LIMIT - 45 MPH	WOOD POST	30	36	7.5	16					7.5			16			
IL 38	M1-I200	633+60	LT	MILE 12	TELESCOPING STEEL	18	18	2.3	14					2.3		14				
IL 38	M1-I200	633+60	RT	MILE 12	TELESCOPING STEEL	18	18	2.3	14					2.3		14				
IL 38	M3-4P	635+50	LT	WEST (WHITE)	WOOD POST	24	12	2.0	16					2.0			16			RELOCATE FROM MAST ARM
IL 38	M1-I100	635+50	LT	STATE ROUTE - IL 38	WOOD POST	24	24	4.0						4.0						
IL 38	R4-7	636+15	LT	KEEP RIGHT	TELESCOPING STEEL	24	30	5.0	16		5.0					16				MEDIAN
IL 38	D3-1	636+27	RT	STREET NAME (GREEN)	MAST ARM	72	18	9.0			9.0									MA-7/DEMENT RD
IL 38	R10-12a	636+27	RT	LEFT YIELD ON FLASHING YELLOW ARROW	MAST ARM	30	36	7.5			7.5									MA-7
IL 38	R10-12a	636+34	LT	LEFT YIELD ON FLASHING YELLOW ARROW	MAST ARM	30	36	7.5			7.5									MA-6
IL 38	R10-3e	636+40	RT	CROSSWALK WITH ARROW (WHITE)	SIGNAL POST	9	15	0.9			0.9									TSP-11
IL 38	R10-3e	636+46	LT	CROSSWALK WITH ARROW (WHITE)	SIGNAL POST	9	15	0.9			0.9									TSP-8
IL 38	R10-5	636+54	LT	LEFT TURN ON GREEN	MAST ARM	30	36	7.5			7.5									MA-5
IL 38	R10-3e	636+55	RT	CROSSWALK WITH ARROW (WHITE)	SIGNAL POST	9	15	0.9			0.9									TSP-10
IL 38	R10-3e	636+70	LT	CROSSWALK WITH ARROW (WHITE)	SIGNAL POST	9	15	0.9			0.9									MA-8
IL 38	R3-8	636+70	LT	ADVANCE LANE (WHITE)	MAST ARM	48	30	10.0				10.0								MA-8
IL 38	D3-1	636+70	LT	DESTINATION SIGN (GREEN)	MAST ARM	60	18	7.5			7.5									MA-8/IL RTE 38 (ILLUMINATED)
IL 38	R10-5	636+70	LT	LEFT TURN ON GREEN	MAST ARM	30	36	7.5			7.5									MA-8
IL 38	R10-3e	636+72	LT	CROSSWALK WITH ARROW (WHITE)	SIGNAL POST	9	15	0.9			0.9									TSP-7
IL 38	R10-3e	636+83	LT	CROSSWALK WITH ARROW (WHITE)	SIGNAL POST	9	15	0.9			0.9									TSP-6
IL 38	R10-3e	636+85	LT	CROSSWALK WITH ARROW (WHITE)	SIGNAL POST	9	15	0.9			0.9									TSP-5
IL 38	R10-3e	637+62	RT	CROSSWALK WITH ARROW (WHITE)	SIGNAL POST	9	15	0.9			0.9									TSP-4
IL 38	R10-3e	637+72	RT	CROSSWALK WITH ARROW (WHITE)	SIGNAL POST	9	15	0.9			0.9									TSP-3
IL 38	R10-5	637+76	RT	LEFT TURN ON GREEN	MAST ARM	30	36	7.5			7.5									MA-2
IL 38	R10-3e	638+03	LT	CROSSWALK WITH ARROW (WHITE)	SIGNAL POST	9	15	0.9			0.9									TSP-2
IL 38	R10-5	638+03	LT	LEFT TURN ON GREEN	MAST ARM	30	36	7.5			7.5									MA-4
IL 38	D3-1	638+03	LT	DESTINATION SIGN (GREEN)	MAST ARM	60	18	7.5			7.5									MA-4/IL RTE 38 (ILLUMINATED)
IL 38	D3-1	638+18	RT	STREET NAME (GREEN)	MAST ARM	72	18	9.0			9.0									MA-1/DEMENT RD
IL 38	R10-12a	638+18	RT	LEFT YIELD ON FLASHING YELLOW ARROW	MAST ARM	30	36	7.5			7.5									MA-1
IL 38	R10-12a	638+30	LT	LEFT YIELD ON FLASHING YELLOW ARROW	MAST ARM	30	36	7.5			7.5									MA-3
IL 38	M3-2P	639+00	RT	EAST (WHITE)	WOOD POST	24	12	2.0	16		2.0						16			
IL 38	M1-I100	639+00	RT	STATE ROUTE - IL 38	WOOD POST	24	24	4.0			4.0									
IL 38	R4-7	639+05	RT	KEEP RIGHT	TELESCOPING STEEL	24	30	5.0	16		5.0					16				
IL 38	R2-1	641+05	RT	SPEED LIMIT - 45 MPH	WOOD POST	30	36	7.5	16		7.5						16			
IL 38	W3-3	643+40	LT	SIGNAL AHEAD (YELLOW)	WOOD POST	36	36	9.0	18		9.0						18			
IL 38	W16-8P	643+40	LT	STREET SIGN (YELLOW)	WOOD POST	36	9	2.3			2.3									DEMENT RD
IL 38	M2-1P	645+50	RT	JCT (BLUE)	WOOD POST	21	15	2.2	16		2.2						16			
IL 38	M1-1	645+50	RT	INTERSTATE 39	WOOD POST	24	24	4.0			4.0									
IL 38	M2-1P	645+50	RT	JCT (WHITE)	WOOD POST	21	15	2.2			2.2									
IL 38	M1-4	645+50	RT	US ROUTE 51	WOOD POST	24	24	4.0			4.0									
IL 38	W3-5	648+00	RT	SPEED LIMIT (35 MPH) WITH ARROW	WOOD POST	36	36	9.0	18		9.0						18			
IL 38	M3-1P	650+30	RT	NORTH (BLUE)	WOOD POST	24	12	2.0	16		2.0						16			
IL 38	M1-1	650+30	RT	INTERSTATE 39	WOOD POST	24	24	4.0			4.0									
IL 38	M5-4P	650+30	RT	LEFT LANE (BLUE)	WOOD POST	24	18	3.0			3.0									
IL 38	M3-3P	650+30	RT	SOUTH (BLUE)	WOOD POST	24	12	2.0			2.0									
IL 38	M1-1	650+30	RT	INTERSTATE 39	WOOD POST	24	24	4.0			4.0									
IL 38	M5-1R	650+30	RT	RIGHT ARROW (BLUE)	WOOD POST	21	15	2.2			2.2									
IL 38	M3-1P	650+30	RT	NORTH (WHITE)	WOOD POST	24	12	2.0	16		2.0						16			
IL 38	M1-4	650+30	RT	US ROUTE 51	WOOD POST	24	24	4.0			4.0									
IL 38	M5-4P	650+30	RT	LEFT LANE (WHITE)	WOOD POST	24	18	3.0			3.0									
IL 38	M3-3P	650+30	RT	SOUTH (WHITE)	WOOD POST	24	12	2.0			2.0									
IL 38	M1-4	650+30	RT	US ROUTE 51	WOOD POST	24	24	4.0			4.0									
IL 38	M5-1R	650+30	RT	RIGHT ARROW (WHITE)	WOOD POST	21	15	2.2			2.2									
IL 38	M3-3P	680+50	LT	SOUTH (BLUE)	WOOD POST	24	12	2.0	16		2.0						16			
IL 38	M1-1	680+50	LT	INTERSTATE 39	WOOD POST	24	24	4.0			4.0									
IL 38	M5-4P	680+50	LT	LEFT LANE (BLUE)	WOOD POST	24	18	3.0			3.0									
IL 38	M3-1P	680+50	LT	NORTH (BLUE)	WOOD POST	24	12	2.0			2.0									
IL 38	M1-1	680+50	LT	INTERSTATE 39	WOOD POST	24	24	4.0			4.0									
IL 38	M5-1R	680+50	LT	RIGHT ARROW (BLUE)	WOOD POST	21	15	2.2			2.2									

* FOR BIDDING PURPOSES ONLY. EXACT SIZE AND POST LENGTH SHALL BE PROVIDED AFTER FINAL GRADING IS COMPLETE.

MODEL: SHT_PLAN
FILE NAME: C:\Bentley\CONNECT1011\Organization-Civil\IDOT_Standards\Cell\IDOT_Sheets.cell

HBM ENGINEERING GROUP, LLC

USER NAME =	DESIGNED - KAO	REVISED -
	DRAWN - KAO	REVISED -
	CHECKED - AMI	REVISED -
PLOT DATE = 2/6/2025	DATE - 2/6/2025	REVISED -

STATE OF ILLINOIS
DEPARTMENT OF TRANSPORTATION

SCHEDULE OF QUANTITIES
IL 38

SCALE: | SHEET 15 OF 22 SHEETS | STA. | TO STA.

F.A.* RTE.	SECTION	COUNTY	TOTAL SHEETS	SHEET NO.
*	141-1HBR-3 & (9,10) R-3	OGLE	508	38
		CONTRACT NO. 64N98		
	ILLINOIS	FED. AID PROJECT		

*FAI ROUTE 39 (I-39) & FAP 567 (IL 38)

PROPOSED, RELOCATIONS. & REINSTALLATIONS

LOCATION	SIGN CODE (MUTCD OR IDOT)	STATION	LT/RT	DESCRIPTION	MOUNTING TYPE	SIGN PANEL WIDTH	SIGN PANEL HEIGHT	SIGN PANEL AREA	POST ONE LENGTH	POST TWO LENGTH	72000100 SIGN PANEL - TYPE 1	72000200 SIGN PANEL - TYPE 2	72000300 SIGN PANEL - TYPE 3	72400710 RELOCATE SIGN PANEL - TYPE 1	72700100 *STRUCTURAL STEEL SIGN SUPPORT BREAKAWAY	72800100 TELESCOPING STEEL SIGN SUPPORT	73000100 WOOD SIGN SUPPORT	73400200 DRILLED SHAFT CONCRETE FOUNDATIONS	X7200075 REMOVE AND REINSTALL SIGN PANEL	REMARKS
(ROAD)		(STA)				(INCH)	(INCH)	(SQ FT)	(FOOT)	(FOOT)	(SQ FT)	(SQ FT)	(SQ FT)	(SQ FT)	(POUND)	(FOOT)	(FOOT)	(CU. YD)	(SQ FT)	
IL 38	M3-3P	680+50	LT	SOUTH (WHITE)	WOOD POST	24	12	2.0			2.0									
IL 38	M1-4	680+50	LT	US ROUTE 51	WOOD POST	24	24	4.0			4.0									
IL 38	M5-4P	680+50	LT	LEFT LANE (WHITE)	WOOD POST	24	18	3.0	16		3.0						16			
IL 38	M3-1P	680+50	LT	NORTH (WHITE)	WOOD POST	24	12	2.0			2.0									
IL 38	M1-4	680+50	LT	US ROUTE 51	WOOD POST	24	24	4.0			4.0									
IL 38	M5-1R	680+50	LT	RIGHT ARROW (WHITE)	WOOD POST	21	15	2.2			2.2									
IL 38	W9-3B	681+60	RT	LEFT LANE ENDS (YELLOW)	WOOD POST	36	36	9.0	18								18		9.0	REINSTALL
IL 38	W3-5	682+25	LT	REDUCE SPEED LIMIT (35 MPH) (YELLOW)	WOOD POST	36	36	9.0	18		9.0						18			
IL 38	R4-7	685+00	LT/RT	KEEP RIGHT	TELESCOPING STEEL	24	30	5.0	16							16			5.0	REINSTALL
IL 38	R4-7	686+20	LT/RT	KEEP RIGHT	TELESCOPING STEEL	24	30	5.0	16							16			5.0	REINSTALL
IL 38	M1-I200	686+40	LT	MILE 13	TELESCOPING STEEL	18	18	2.3	14					2.3		14				
IL 38	M1-I200	686+40	RT	MILE 14	TELESCOPING STEEL	18	18	2.3	14					2.3		14				
IL 38	W4-2	686+60	RT	LANE ENDS MERGE LEFT (YELLOW)	WOOD POST	36	56	14.0	18								18		14.0	REINSTALL
IL 38	OM3-L	692+15	LT/RT	OBJECT MARKER	TELESCOPING STEEL	12	36	3.0	16							16			3.0	REINSTALL
IL 38	R4-7	692+15	LT/RT	KEEP RIGHT	TELESCOPING STEEL	24	30	5.0											5.0	REINSTALL
IL 38	R2-1	693+50	LT	SPEED LIMIT - 45 MPH	WOOD POST	30	36	7.5	16		7.5						16			
IL 38	R2-1	693+50	RT	SPEED LIMIT - 55 MPH	WOOD POST	30	36	7.5	16		7.5						16			
IL 38	W6-1	696+00	LT	DIVIDED HIGHWAY (YELLOW)	WOOD POST	36	36	9.0	16		9.0						16			
IL 38	W6-3	696+00	RT	TWO WAY TRAFFIC	WOOD POST	36	36	9.0	16		9.0						16			
IL 38	R2-1	1653+00	RT	SPEED LIMIT - 35 MPH	WOOD POST	30	36	7.5	16		7.5						16			
IL 38	M4-5P	1654+90	RT	TO (BLUE)	WOOD POST	24	12	2.0											2.0	
IL 38	M4-15P	1654+90	RT	TOLL (YELLOW)	WOOD POST	24	12	2.0	20								20		2.0	REINSTALL
IL 38	M1-1	1654+90	RT	INTERSTATE 88	WOOD POST	24	24	4.0											4.0	
IL 38	M6-1R	1654+90	RT	RIGHT ARROW (BLUE)	WOOD POST	21	15	2.2											2.2	
IL 38	-	1656+86	RT	LEFT (YELLOW)	OHSS	36	18	4.5			4.5									
IL 38	-	1656+86	RT	GUIDE SIGN (GREEN)	OHSS	126	90	78.8					78.8							N ROCKFORD
IL 38	-	1656+86	RT	GUIDE SIGN (GREEN)	OHSS	84	66	38.5					38.5					28.3		E DEKALB
IL 38	-	1656+86	RT	GUIDE SIGN (GREEN)	OHSS	126	90	78.8					78.8							S LASALLE
IL 38	R4-7	1657+50	LT	KEEP RIGHT	SIGNAL POST	24	30	5.0			5.0									MA-13
IL 38	R3-3	1657+50	LT	NO TURNS	SIGNAL POST	24	24	4.0			4.0									MA-13
IL 38	R5-1	1657+50	LT	DO NOT ENTER	TELESCOPING STEEL	36	36	9.0	16		9.0					16				
IL 38	M3-3P	1657+50	RT	SOUTH (BLUE)	WOOD POST	24	12	2.0			2.0									
IL 38	M1-1	1657+50	RT	INTERSTATE 39	WOOD POST	24	24	4.0			4.0									
IL 38	M6-2R	1657+50	RT	RIGHT ARROW (BLUE)	WOOD POST	21	15	2.2	16		2.2						16			
IL 38	M3-3P	1657+50	RT	SOUTH (WHITE)	WOOD POST	24	12	2.0			2.0									
IL 38	M1-4	1657+50	RT	US ROUTE 51	WOOD POST	24	24	4.0			4.0									
IL 38	M6-2R	1657+50	RT	RIGHT ARROW (WHITE)	WOOD POST	21	15	2.2			2.2									
IL 38	R5-1	1657+55	LT	DO NOT ENTER	SIGNAL POST	36	36	9.0			9.0									TSP-19
IL 38	R3-3	1657+55	LT	NO TURNS	SIGNAL POST	24	24	4.0			4.0									TSP-19
IL 38	R10-3e	1658+40	LT	CROSSWALK WITH ARROW (WHITE)	SIGNAL POST	9	15	0.9			0.9									TSP-16
IL 38	R4-8	1658+50	RT	KEEP LEFT	SIGNAL POST	24	30	5.0			5.0									TSP-13
IL 38	R3-3	1658+50	RT	NO TURNS	SIGNAL POST	24	24	4.0			4.0									TSP-13
IL 38	R3-3	1658+50	RT	NO TURNS	MAST ARM	36	36	9.0			9.0									MA-11
IL 38	R10-3e	1658+52	LT	CROSSWALK WITH ARROW (WHITE)	SIGNAL POST	9	15	0.9			0.9									TSP-13
IL 38	R10-11b	1659+10	LT	NO TURN ON RED	SIGNAL POST	24	24	4.0			4.0									TSP-14
IL 38	R10-11b	1659+10	LT	NO TURN ON RED	SIGNAL POST	24	24	4.0			4.0									TSP-15
IL 38	R10-11b	1659+50	RT	NO TURN ON RED	MAST ARM	36	36	9.0			9.0									MA-10
IL 38	R6-1I	1659+50	RT	ONE WAY	MAST ARM	54	18	6.8			6.8									MA-10
IL 38	D3-1	1659+50	RT	DESTINATION SIGN (GREEN)	MAST ARM	60	18	7.5			7.5									MA-10/IL RTE 38
IL 38	M3-2P	1660+00	LT	EAST (WHITE)	WOOD POST	24	12	2.0	16		2.0						16			
IL 38	M1-I100	1660+00	LT	STATE ROUTE - IL 38	WOOD POST	24	24	4.0			4.0									
IL 38	R2-1	1661+95	LT	SPEED LIMIT - 35 MPH	WOOD POST	30	36	7.5	16		7.5						16			
IL 38	R2-1	1661+95	LT	SPEED LIMIT - 35 MPH	WOOD POST	30	36	7.5	16		7.5						16			
IL 38	M3-1P	1666+70	RT	NORTH (BLUE)	WOOD POST	24	12	2.0			2.0									
IL 38	M3-1P	1666+70	RT	NORTH (WHITE)	WOOD POST	24	12	2.0			2.0									
IL 38	M1-1	1666+70	RT	INTERSTATE 39	WOOD POST	24	24	4.0	16		4.0						16			
IL 38	M1-4	1666+70	RT	US ROUTE 51	WOOD POST	24	24	4.0			4.0									
IL 38	M5-1L	1666+70	RT	LEFT ARROW (BLUE)	WOOD POST	21	15	2.2			2.2									
IL 38	M5-1L	1666+70	RT	LEFT ARROW (WHITE)	WOOD POST	21	15	2.2			2.2									
IL 38	R5-1a	1670+20	LT	WRONG WAY	LIGHT POLE	36	24	6.0			6.0									
IL 38	R5-1a	1670+20	RT	WRONG WAY	WOOD POST	36	24	6.0	16		6.0						16			
IL 38	-	1671+20	RT	GUIDE SIGNS	STRUCTURAL STEEL	138	150	143.8					143.8		2248.8			2.1		E DEKALB/ N ROCKFORD
IL 38	R5-1	1671+84	LT	DO NOT ENTER	TELESCOPING STEEL	36	36	9.0	16		9.0					16				
IL 38	R3-3	1671+84	LT	NO TURNS	TELESCOPING STEEL	36	36	9.0			9.0									

* FOR BIDDING PURPOSES ONLY. EXACT SIZE AND POST LENGTH SHALL BE PROVIDED AFTER FINAL GRADING IS COMPLETE.

MODEL: SHT_PLAN
FILE NAME: C:\Bentley\CONNECT1011\Organization~Civil\IDOT_Standards\Cell\IDOT_Sheets.cel

HBM ENGINEERING GROUP, LLC

USER NAME =	DESIGNED - KAO	REVISED -	
	DRAWN - KAO	REVISED -	
	CHECKED - AMI	REVISED -	
PLOT DATE = 2/6/2025	DATE - 2/6/2025	REVISED -	

STATE OF ILLINOIS
DEPARTMENT OF TRANSPORTATION

SCHEDULE OF QUANTITIES
IL 38

SCALE: SHEET 16 OF 22 SHEETS STA. TO STA.

F.A.* RTE.	SECTION	COUNTY	TOTAL SHEETS	SHEET NO.
*	141-1HBR-3 & (9,10) R-3	OGLE	508	39
		CONTRACT NO. 64N98		
		ILLINOIS FED. AID PROJECT		

*FAI ROUTE 39 (I-39) & FAP 567 (IL 38)

PROPOSED, RELOCATIONS, & REINSTALLATIONS

LOCATION	SIGN CODE (MUTCD OR IDOT)	STATION	LT/RT	DESCRIPTION	MOUNTING TYPE	SIGN PANEL WIDTH	SIGN PANEL HEIGHT	SIGN PANEL AREA	POST ONE LENGTH	POST TWO LENGTH	72000100 SIGN PANEL - TYPE 1	72000200 SIGN PANEL - TYPE 2	72000300 SIGN PANEL - TYPE 3	72400710 RELOCATE SIGN PANEL - TYPE 1	72700100 *STRUCTURAL STEEL SIGN SUPPORT BREAKAWAY	72800100 TELESCOPING STEEL SIGN SUPPORT	73000100 WOOD SIGN SUPPORT	73400200 DRILLED SHAFT CONCRETE FOUNDATIONS	X7200075 REMOVE AND REINSTALL SIGN PANEL	REMARKS
(ROAD)		(STA)				(INCH)	(INCH)	(SQ FT)	(FOOT)	(FOOT)	(SQ FT)	(SQ FT)	(SQ FT)	(SQ FT)	(POUND)	(FOOT)	(FOOT)	(CU. YD)	(SQ FT)	
IL 38	R5-1	1672+25	RT	DO NOT ENTER	SIGNAL POST	36	36	9.0			9.0									TSP-26
IL 38	R3-3	1672+25	RT	NO TURNS	SIGNAL POST	36	36	9.0			9.0									TSP-26
IL 38	R10-3e	1672+25	LT	CROSSWALK WITH ARROW (WHITE)	SIGNAL POST	9	15	0.9			0.9									TSP-26
IL 38	R3-2	1672+75	RT	NO LEFT TURN	WOOD POST	30	30	6.3	16		6.3						16			
IL 38	R4-8	1673+12	RT	KEEP RIGHT	SIGNAL POST	24	30	5.0			5.0									MA-15
IL 38	R3-3	1673+12	RT	NO TURNS	SIGNAL POST	24	24	4.0			4.0									MA-15
IL 38	R3-3	1673+12	RT	NO TRUNS	MAST ARM	36	36	9.0			9.0									MA-15
IL 38	R10-11b	1673+25	RT	NO TURN ON RED	SIGNAL POST	24	24	4.0			4.0									TSP-21
IL 38	R10-11b	1673+40	RT	NO TURN ON RED	SIGNAL POST	24	24	4.0			4.0									TSP-22
IL 38	R10-11b	1673+80	LT	NO TURN ON RED	MAST ARM	36	36	9.0			9.0									MA-14
IL 38	R6-1r	1673+80	LT	ONE WAY	SIGNAL POST	54	18	6.8			6.8									MA-14
IL 38	D3-1	1673+80	LT	DESTINATION SIGN (GREEN)	MAST ARM	60	18	7.5			7.5									MA-14
IL 38	M3-4P	1674+40	RT	EAST (WHITE)	WOOD POST	24	12	2.0			2.0									
IL 38	M1-I100	1674+40	RT	STATE ROUTE - IL 38	WOOD POST	24	24	4.0	20		4.0						20			
IL 38	XM-31	1674+40	RT	HISTORIC ROUTE (WHITE)	WOOD POST	24	30	5.0			5.0									
IL 38	IL-I107B	1675+82	RT	ADOPT HIGHWAY (GREEN/WHITE)	WOOD POST	30	36	7.5	16		7.5						16			
IL 38	R2-1	1677+25	RT	SPEED LIMIT - 45 MPH	WOOD POST	30	36	7.5	16		7.5						16			
IL 38	R2-1	1677+25	LT	SPEED LIMIT - 45 MPH	WOOD POST	30	36	7.5	15		7.5						15			
IL 38	R2-1	1677+25	LT	SPEED LIMIT - 35 MPH	WOOD POST	30	36	7.5			7.5									
IL 38	R2-1	2653+00	LT	SPEED LIMIT - 45 MPH	WOOD POST	30	36	7.5	16		7.5						16			
IL 38	R2-1	2653+00	LT	SPEED LIMIT - 45 MPH	WOOD POST	30	36	7.5	15		7.5						15			
IL 38	R2-1	2653+00	LT	SPEED LIMIT - 35 MPH	WOOD POST	30	36	7.5			7.5									
IL 38	M3-4P	2656+50	LT	WEST (WHITE)	WOOD POST	24	12	2.0			2.0									
IL 38	M1-I100	2656+50	LT	STATE ROUTE - IL 38	WOOD POST	24	24	4.0			4.0									
IL 38	XM-31	2656+50	LT	HISTORIC ROUTE (WHITE)	WOOD POST	24	30	5.0	20		5.0						20			
IL 38	WSPC	2656+50	LT	EMERGENCY ROUTE (YELLOW)	WOOD POST	24	12	2.0			2.0									
IL 38	M1-1	2656+50	LT	INTERSTATE 39	WOOD POST	24	24	4.0			4.0									
IL 38	R10-11b	2656+80	LT	NO TURN ON RED	MAST ARM	36	36	9.0			9.0									MA-12
IL 38	D3-1	2656+80	LT	DESTINATION SIGN (GREEN)	MAST ARM	60	18	7.5			7.5									MA-12
IL 38	R3-3	2657+50	LT	NO TURN ON RED	SIGNAL POST	24	24	4.0			4.0									TSP-17
IL 38	R10-3e	2657+50	LT	CROSSWALK WITH ARROW (WHITE)	SIGNAL POST	9	15	0.9			0.9									TSP-17
IL 38	R3-3	2657+50	LT	NO TURNS	MAST ARM	36	36	9.0			9.0									MA-13
IL 38	R3-1	2657+70	LT	NO RIGHT TURN	WOOD POST	30	30	6.3	16		6.3						16			
IL 38	R10-11b	2657+75	LT	NO TURN ON RED	SIGNAL POST	24	24	4.0			4.0									TSP-18
IL 38	R10-3e	2657+75	LT	CROSSWALK WITH ARROW (WHITE)	SIGNAL POST	9	15	0.9			0.9									TSP-18
IL 38	R3-3	2658+50	LT	NO TURNS	SIGNAL POST	36	36	9.0			9.0									TSP-12
IL 38	R5-1	2658+50	LT	DO NOT ENTER	SIGNAL POST	36	36	9.0			9.0									TSP-12
IL 38	-	2659+41	LT	GUIDE SIGNS	STRUCTURAL STEEL	174	150	181.3					181.3		2234.8			2.1		W DIXON/S LASALLE
IL 38	R5-1a	2661+00	LT	WRONG WAY	WOOD POST	36	24	6.0	16		6.0						16			
IL 38	R5-1a	2661+00	RT	WRONG WAY	WOOD POST	36	24	6.0	16		6.0						16			
IL 38	M4-5P	2664+05	RT	TO (BLUE)	WOOD POST	24	12	2.0			2.0									
IL 38	M4-15P	2664+05	RT	TOLL (YELLOW)	WOOD POST	24	12	2.0	20		2.0						20			
IL 38	M1-1	2664+05	RT	INTERSTATE 88	WOOD POST	24	24	4.0			4.0									
IL 38	M5-1L	2664+05	RT	LEFT ARROW (BLUE)	WOOD POST	21	15	2.2			2.2									
IL 38	M3-3P	2664+05	RT	SOUTH (BLUE)	WOOD POST	24	12	2.0			2.0									
IL 38	M1-1	2664+05	RT	INTERSTATE 39	WOOD POST	24	24	4.0			4.0									
IL 38	M5-1L	2664+05	RT	LEFT ARROW (BLUE)	WOOD POST	21	15	2.2	16		2.2						16			
IL 38	M3-3P	2664+05	RT	SOUTH (WHITE)	WOOD POST	24	12	2.0			2.0									
IL 38	M1-4	2664+05	RT	US ROUTE 51	WOOD POST	24	24	4.0			4.0									
IL 38	M5-1L	2664+05	RT	LEFT ARROW (WHITE)	WOOD POST	21	15	2.2			2.2									
IL 38	R2-1	2668+25	RT	SPEED LIMIT - 35 MPH	LIGHT POLE	30	36	7.5			7.5									
IL 38	R2-1	2668+25	LT	SPEED LIMIT - 35 MPH	WOOD POST	30	36	7.5	16		7.5						16			
IL 38	M3-4P	2670+50	RT	WEST (WHITE)	WOOD POST	24	12	2.0	16		2.0						16			
IL 38	M1-I100	2670+50	RT	STATE ROUTE - IL 38	WOOD POST	24	24	4.0			4.0									
IL 38	R10-11b	2671+20	LT	NO TURN ON RED	MAST ARM	36	36	9.0			9.0									MA-17
IL 38	R6-1l	2671+20	LT	ONE WAY	SIGNAL POST	54	18	6.8			6.8									MA-17
IL 38	D3-1	2671+20	LT	DESTINATION SIGN (GREEN)	SIGNAL POST	60	18	7.5			7.5									MA-17
IL 38	R10-11b	2671+60	RT	NO TURN ON RED	SIGNAL POST	24	24	4.0			4.0									TSP-30
IL 38	R10-11b	2671+92	RT	NO TURN ON RED	SIGNAL POST	24	24	4.0			4.0									TSP-29
IL 38	R3-3	2672+00	LT	NO TURNS	MAST ARM	36	36	9.0			9.0									MA-18
IL 38	R4-8	2672+00	RT	KEEP LEFT	SIGNAL POST	24	30	5.0			5.0									MA-18
IL 38	R3-3	2672+00	RT	NO TURNS	SIGNAL POST	36	36	9.0			9.0									MA-18
IL 38	R10-3e	2672+00	LT	CROSSWALK WITH ARROW (WHITE)	SIGNAL POST	9	15	0.9			0.9									MA-18
IL 38	R3-2	2672+50	RT	NO LEFT TURN	WOOD POST	30	30	6.3	16		6.3						16			

* FOR BIDDING PURPOSES ONLY. EXACT SIZE AND POST LENGTH SHALL BE PROVIDED AFTER FINAL GRADING IS COMPLETE.

MODEL: SHT_PLAN
FILE NAME: C:\Bentley\CONNECT1011\Organization-Civil\IDOT_Standards\Cell\IDOT_Sheets.cel

HBM ENGINEERING GROUP, LLC

USER NAME =	DESIGNED - KAO	REVISED -	
	DRAWN - KAO	REVISED -	
	CHECKED - AMI	REVISED -	
PLOT DATE = 2/6/2025	DATE - 2/6/2025	REVISED -	

STATE OF ILLINOIS
DEPARTMENT OF TRANSPORTATION

SCHEDULE OF QUANTITIES
IL 38

SCALE: | SHEET 17 OF 22 SHEETS | STA. TO STA.

F.A.* RTE.	SECTION	COUNTY	TOTAL SHEETS	SHEET NO.
*	141-1HBR-3 & (9,10) R-3	OGLE	508	40
		CONTRACT NO. 64N98		
	ILLINOIS	FED. AID PROJECT		

*FAI ROUTE 39 (I-39) & FAP 567 (IL 38)

PROPOSED, RELOCATIONS. & REINSTALLATIONS

LOCATION	SIGN CODE (MUTCD OR IDOT)	STATION	LT/RT	DESCRIPTION	MOUNTING TYPE	SIGN PANEL WIDTH	SIGN PANEL HEIGHT	SIGN PANEL AREA	POST ONE LENGTH	POST TWO LENGTH	72000100 SIGN PANEL - TYPE 1	72000200 SIGN PANEL - TYPE 2	72000300 SIGN PANEL - TYPE 3	72400710 RELOCATE SIGN PANEL - TYPE 1	72700100 *STRUCTURAL STEEL SIGN SUPPORT BREAKAWAY	72800100 TELESCOPING STEEL SIGN SUPPORT	73000100 WOOD SIGN SUPPORT	73400200 DRILLED SHAFT CONCRETE FOUNDATIONS	X7200075 REMOVE AND REINSTALL SIGN PANEL	REMARKS
(ROAD)		(STA)				(INCH)	(INCH)	(SQ FT)	(FOOT)	(FOOT)	(SQ FT)	(SQ FT)	(SQ FT)	(SQ FT)	(POUND)	(FOOT)	(FOOT)	(CU. YD)	(SQ FT)	
IL 38	R5-1	2672+80	LT	DO NOT ENTER	SIGNAL POST	36	36	9.0			9.0									TSP-23
IL 38	R3-3	2672+80	LT	NO TURNS	SIGNAL POST	36	36	9.0			9.0									TSP-23
IL 38	R10-11b	2673+00	LT	NO TURN ON RED	MAST ARM	36	36	9.0			9.0									MA-16
IL 38	R5-1	2673+08	RT	DO NOT ENTER	TELESCOPING STEEL	36	36	9.0	16		9.0					16				
IL 38	R3-3	2673+10	RT	NO TURNS	SIGNAL POST	36	36	9.0			9.0									MA-15
IL 38	R10-3e	2673+23	LT	CROSSWALK WITH ARROW (WHITE)	SIGNAL POST	9	15	0.9			0.9									TSP-24
IL 38	R10-11b	2673+23	LT	NO TURN ON RED	SIGNAL POST	24	24	4.0			4.0									TSP-24
IL 38	M3-1P	2673+30	LT	NORTH (BLUE)	WOOD POST	24	12	2.0			2.0									
IL 38	M1-1	2673+30	LT	INTERSTATE 39	WOOD POST	24	24	4.0			4.0									
IL 38	M6-2R	2673+30	LT	RIGHT ARROW (BLUE)	WOOD POST	21	15	2.2	16		2.2						16			
IL 38	M3-1P	2673+30	LT	NORTH (WHITE)	WOOD POST	24	12	2.0			2.0									
IL 38	M1-4	2673+30	LT	US ROUTE 51	WOOD POST	24	24	4.0			4.0									
IL 38	M6-2R	2673+30	LT	RIGHT ARROW (WHITE)	WOOD POST	21	15	2.2			2.2									
IL 38	R10-3e	2673+50	LT	CROSSWALK WITH ARROW (WHITE)	SIGNAL POST	9	15	0.9			0.9									TSP-25
IL 38	R10-11b	2673+50	RT	NO TURN ON RED	SIGNAL POST	24	24	4.0			4.0									TSP-25
IL 38	-	2673+91	LT	LEFT (YELLOW)	OHSS	36	18	4.5			4.5									
IL 38	-	2673+91	LT	GUIDE SIGNS	OHSS	138	90	86.3					86.3							S LASALLE
IL 38	-	2673+91	LT	GUIDE SIGNS	OHSS	90	60	37.5					37.5					36.1		W DIXON
IL 38	-	2673+91	LT	GUIDE SIGNS	OHSS	132	66	60.5					60.5							N ROCKFORD
IL 38	R2-1	2677+40	LT	SPEED LIMIT - 35 MPH	WOOD POST	30	36	7.5	16		7.5						16			
IL 38	M4-5P	2679+10	LT	TO (BLUE)	WOOD POST	24	12	2.0			2.0									
IL 38	M4-15P	2679+10	LT	TOLL (YELLOW)	WOOD POST	24	12	2.0	20		2.0						20			
IL 38	M1-1	2679+10	LT	INTERSTATE 88	WOOD POST	24	24	4.0			4.0									
IL 38	M5-4P	2679+10	LT	LEFT LANE (WHITE)	WOOD POST	24	18	3.0			3.0									
I-39/NE RAMP	W9-1R	12+00	LT	RIGHT LANE ENDS (YELLOW)	WOOD POST	36	36	9.0	18		9.0						18			
I-39/NE RAMP	W9-1R	12+00	RT	RIGHT LANE ENDS (YELLOW)	WOOD POST	36	36	9.0	18		9.0						18			
I-39/NE RAMP	R5-I100	13+10	RT	PROHIBITED (WHITE)	WOOD POST	48	60	20.0	20			20.0					20			
I-39/NE RAMP	W4-2R	14+00	LT	RIGHT LANE ENDS MERGE LEFT (YELLOW)	WOOD POST	36	36	9.0	18		9.0						18			
I-39/NE RAMP	W4-2R	14+00	RT	RIGHT LANE ENDS MERGE LEFT (YELLOW)	WOOD POST	36	36	9.0	18		9.0						18			
I-39/NW RAMP	-	42+50	RT	GUIDE SIGNS	OHSS	150	204	212.5					212.5					26.3		MOLINE ROCK ISLAND
I-39/NW RAMP	-	42+50	RT	GUIDE SIGNS	OHSS	156	150	162.5					162.5							ROCHELLE DEKALB
I-39/NW RAMP	W13-3	45+50	RT	RAMP SPEED - 40 MPH (YELLOW)	WOOD POST	48	60	20.0	20			20.0					20			
I-39/NW RAMP	E5-1a	47+50	LT	EXIT 99 (GREEN)	WOOD POST	78	60	32.5	19	19			32.5				38			2 WOOD POST AT 19' EACH
I-39/NW RAMP	W1-8	49+04	LT	CHEVRON - (RIGHT)	WOOD POST	30	36	7.5	16					7.5			16			RELOCATE
I-39/NW RAMP	R5-1a	49+20	LT	WRONG WAY	WOOD POST	42	30	8.8												EXISITNG
I-39/NW RAMP	-	49+20	LT	RED STRIP	WOOD POST	2	48	0.7			0.7									
I-39/NW RAMP	R5-1a	49+20	RT	WRONG WAY	STRUCTURAL STEEL	42	30	8.8											8.8	REINSTALL
I-39/NW RAMP	-	49+20	RT	RED STRIP	STRUCTURAL STEEL	2	48	0.7			0.7				1219.1					
I-39/NW RAMP	-	49+20	RT	ATTRACTIONS SIGN (BLUE) - RAMP PANEL	STRUCTURAL STEEL	150	96	100.0	23	23			100.0					1.3		
I-39/NW RAMP	W1-8	50+64	LT	CHEVRON - (RIGHT)	WOOD POST	30	36	7.5	16					7.5			16			RELOCATE
I-39/NW RAMP	-	50+60	RT	LODGING SIGN (BLUE) - RAMP PANEL	STRUCTURAL STEEL	150	96	100.0	23	23			100.0		1226.4			1.3		
I-39/NW RAMP	-	51+85	RT	FOOD SIGN (BLUE) - RAMP PANEL	STRUCTURAL STEEL	150	96	100.0	23	23			100.0		1215.5			1.3		
I-39/NW RAMP	W1-8	52+24	LT	CHEVRON - (RIGHT)	WOOD POST	30	36	7.5	16					7.5			16			RELOCATE
I-39/NW RAMP	W3-3	53+10	RT	SIGNAL AHEAD (YELLOW)	WOOD POST	36	36	9.0	16		9.0						16			
I-39/NW RAMP	W1-8	53+84	LT	CHEVRON - (RIGHT)	WOOD POST	30	36	7.5	16					7.5			16			RELOCATE
I-39/NW RAMP	-	54+15	RT	GAS SIGN (BLUE) - RAMP PANEL	STRUCTURAL STEEL	150	96	100.0					100.0					1.3		
I-39/NW RAMP	D9-7	54+15	RT	E-85/BIODIESEL (BLUE)	STRUCTURAL STEEL	18	24	3.0	23	23	3.0				1131.8					
I-39/NW RAMP	M6-1R	54+15	RT	RIGHT ARROW (BLUE)	STRUCTURAL STEEL	12	9	0.8			0.8									
I-39/NW RAMP	D9-2	55+19	RT	HOSPITAL (BLUE)	WOOD POST	24	24	4.0	16		4.0						16			
I-39/NW RAMP	M6-1R	55+19	RT	RIGHT ARROW (BLUE)	WOOD POST	21	15	2.2			2.2									
I-39/NW RAMP	-	56+23	RT	DESTINATION SIGN (GREEN)	STRUCTURAL STEEL	96	48	32.0	16	16			32.0		279.6			0.7		
I-39/NW RAMP	W1-8	56+73	RT	CHEVRON - (LEFT)	WOOD POST	30	36	7.5	16					7.5			16			RELOCATE
I-39/NW RAMP	R3-8LR	57+23	RT	ADVANCE LANE	WOOD POST	36	30	7.5			7.5									
I-39/NW RAMP	R5-1a	57+23	RT	WRONG WAY	WOOD POST	42	30	8.8	16		8.8						16			
I-39/NW RAMP	-	57+23	RT	RED STRIP	WOOD POST	2	48	0.7			0.7									
I-39/NW RAMP	R3-8LR	57+23	LT	ADVANCE LANE	WOOD POST	36	30	7.5			7.5									
I-39/NW RAMP	R5-1a	57+23	LT	WRONG WAY	WOOD POST	42	30	8.8	16		8.8						16			
I-39/NW RAMP	-	57+23	LT	RED STRIP	WOOD POST	2	48	0.7			0.7									
I-39/NW RAMP	W1-8	57+73	RT	CHEVRON - (LEFT)	WOOD POST	30	36	7.5	16					7.5			16			RELOCATE
I-39/NW RAMP	W1-8	58+73	RT	CHEVRON - (LEFT)	WOOD POST	30	36	7.5	16					7.5			16			RELOCATE
I-39/NW RAMP	R5-1	59+43	LT	DO NOT ENTER	WOOD POST	48	48	16.0	20			16.0					20			
I-39/NW RAMP	-	59+43	LT	RED STRIP	WOOD POST	2	48	0.7			0.7									
I-39/NW RAMP	R5-1	59+43	RT	DO NOT ENTER	WOOD POST	48	48	16.0	20			16.0					20			
I-39/NW RAMP	-	59+43	RT	RED STRIP	WOOD POST	2	48	0.7			0.7									

* FOR BIDDING PURPOSES ONLY. EXACT SIZE AND POST LENGTH SHALL BE PROVIDED AFTER FINAL GRADING IS COMPLETE.

MODEL: SHT_PLAN
FILE NAME: C:\Bentley\CONNECT1011\Organization-Civil\IDOT_Standards\Cell\IDOT_Sheets.cel

HBM ENGINEERING GROUP, LLC

USER NAME =	DESIGNED - KAO	REVISED -	
	DRAWN - KAO	REVISED -	
	CHECKED - AMI	REVISED -	
PLOT DATE = 2/6/2025	DATE - 2/6/2025	REVISED -	

STATE OF ILLINOIS
DEPARTMENT OF TRANSPORTATION

SCHEDULE OF QUANTITIES
IL 38

SCALE: | SHEET 18 OF 22 SHEETS | STA. | TO STA.

F.A.* RTE.	SECTION	COUNTY	TOTAL SHEETS	SHEET NO.
*	141-1HBR-3 & (9,10) R-3	OGLE	508	41
		CONTRACT NO. 64N98		
	ILLINOIS	FED. AID PROJECT		

*FAI ROUTE 39 (I-39) & FAP 567 (IL 38)

PROPOSED, RELOCATIONS, & REINSTALLATIONS

LOCATION	SIGN CODE (MUTCD OR IDOT)	STATION	LT/RT	DESCRIPTION	MOUNTING TYPE	SIGN PANEL WIDTH	SIGN PANEL HEIGHT	SIGN PANEL AREA	POST ONE LENGTH	POST TWO LENGTH	72000100 SIGN PANEL - TYPE 1	72000200 SIGN PANEL - TYPE 2	72000300 SIGN PANEL - TYPE 3	72400710 RELOCATE SIGN PANEL - TYPE 1	72700100 *STRUCTURAL STEEL SIGN SUPPORT BREAKAWAY	72800100 TELESCOPING STEEL SIGN SUPPORT	73000100 WOOD SIGN SUPPORT	73400200 DRILLED SHAFT CONCRETE FOUNDATIONS	X7200075 REMOVE AND REINSTALL SIGN PANEL	REMARKS
(ROAD)		(STA)				(INCH)	(INCH)	(SQ FT)	(FOOT)	(FOOT)	(SQ FT)	(SQ FT)	(SQ FT)	(SQ FT)	(POUND)	(FOOT)	(FOOT)	(CU. YD)	(SQ FT)	
I-39/NW RAMP	M3-4P	60+20	LT	WEST (WHITE)	WOOD POST	24	12	2.0			2.0									
I-39/NW RAMP	M1-I100	60+20	LT	STATE ROUTE - IL 38	WOOD POST	24	24	4.0			4.0									
I-39/NW RAMP	M6-2R	60+20	LT	RIGHT ARROW (WHITE)	WOOD POST	21	15	2.2	16		2.2						16			
I-39/NW RAMP	M3-2P	60+20	LT	EAST (WHITE)	WOOD POST	24	12	2.0			2.0									
I-39/NW RAMP	M1-I100	60+20	LT	STATE ROUTE - IL 38	WOOD POST	24	24	4.0			4.0									
I-39/NW RAMP	M6-2L	60+20	LT	LEFT ARROW (WHITE)	WOOD POST	21	15	2.2			2.2									
I-39/SW RAMP	W9-1R	71+60	LT	RIGHT LANE ENDS	WOOD POST	36	36	9.0	18		9.0						18			
I-39/SW RAMP	W9-1R	71+60	RT	RIGHT LANE ENDS	WOOD POST	36	36	9.0	18		9.0						18			
I-39/SW RAMP	R5-I100	72+54	RT	PROHIBITED (WHITE)	WOOD POST	48	60	20.0	20			20.0					20			
I-39/SW RAMP	W4-2R	73+70	LT	MERGE LEFT	WOOD POST	36	36	9.0	18		9.0						18			
I-39/SW RAMP	W4-2R	73+70	RT	MERGE LEFT	WOOD POST	36	36	9.0	18		9.0						18			
I-39/SE RAMP	W13-3	105+60	RT	RAMP SPEED - 40 MPH (YELLOW)	LIGHT POLE	48	60	20.0				20.0								
I-39/SE RAMP	E5-1a	107+40	LT	EXIT 99 (GREEN)	WOOD POST	78	60	32.5	19	19			32.5				38			2 WOOD POST AT 19' EACH
I-39/SE RAMP	-	109+05	RT	ATTRACTIONS SIGN (BLUE) - RAMP PANEL	STRUCTURAL STEEL	150	96	100.0	23	23			100.0		1170.8			1.3		
I-39/SE RAMP	W1-8	127+05	LT	CHEVRON - (RIGHT)	WOOD POST	30	36	7.5			7.5									
I-39/SE RAMP	R5-1a	127+05	LT	WRONG WAY	WOOD POST	42	30	8.8	16		8.8						16			
I-39/SE RAMP	-	127+05	LT	RED STRIP	WOOD POST	2	48	0.7			0.7									
I-39/SE RAMP	R5-1a	127+05	RT	WRONG WAY	STRUCTURAL STEEL	42	30	8.8			8.8									
I-39/SE RAMP	-	127+05	RT	RED STRIP	STRUCTURAL STEEL	2	48	0.7			0.7									
I-39/SE RAMP	WSPC	110+30	RT	EMERGENCY ROUTE (YELLOW)	WOOD POST	24	12	2.0			2.0									
I-39/SE RAMP	M1-1	110+30	RT	INTERSTATE 39	WOOD POST	24	24	4.0	18		4.0						18			
I-39/SE RAMP	M5-1L	110+30	RT	LEFT ARROW (BLUE)	WOOD POST	21	15	2.2			2.2									
I-39/SE RAMP	W1-8	110+87	LT	CHEVRON - (RIGHT)	WOOD POST	30	36	7.5	16		7.5						16			
I-39/SE RAMP	-	111+30	RT	LODGING SIGN (BLUE) - RAMP PANEL	STRUCTURAL STEEL	150	96	100.0	23	23			100.0		1176.8			1.3		
I-39/SE RAMP	-	112+30	RT	FOOD SIGN (BLUE) - RAMP PANEL	STRUCTURAL STEEL	150	96	100.0	23	23			100.0		1205.1			1.3		
I-39/SE RAMP	W1-8	112+47	LT	CHEVRON - (RIGHT)	WOOD POST	30	36	7.5	16		7.5						16			
I-39/SE RAMP	-	113+30	RT	GAS SIGN (BLUE) - RAMP PANEL	STRUCTURAL STEEL	150	96	100.0					100.0					1.3		
I-39/SE RAMP	D9-7	113+30	RT	E-85/BIODIESEL (BLUE)	STRUCTURAL STEEL	18	24	3.0	23.00	23.00	3.0				1223.8					
I-39/SE RAMP	M6-1L	113+30	RT	LEFT ARROW (BLUE)	STRUCTURAL STEEL	12	9	0.8			0.8									
I-39/SE RAMP	W1-8	114+07	LT	CHEVRON - (RIGHT)	WOOD POST	30	36	7.5	16		7.5						16			
I-39/SE RAMP	D9-2	114+30	RT	HOSPITAL (BLUE)	WOOD POST	24	24	4.0			4.0									
I-39/SE RAMP	M6-1L	114+30	RT	LEFT ARROW (BLUE)	WOOD POST	21	15	2.2			2.2									
I-39/SE RAMP	WSPC	114+30	RT	EMERGENCY ROUTE (YELLOW)	WOOD POST	24	12	2.0	16		2.0						16			
I-39/SE RAMP	M1-1	114+30	RT	INTERSTATE 39	WOOD POST	24	24	4.0			4.0									
I-39/SE RAMP	M6-1L	114+30	RT	LEFT ARROW (BLUE)	WOOD POST	21	15	2.2			2.2									
I-39/SE RAMP	W3-3	115+20	RT	SIGNAL AHEAD (YELLOW)	WOOD POST	36	36	9.0	16		9.0						16			
I-39/SE RAMP	-	116+32	RT	DESTINATION SIGN (GREEN)	STRUCTURAL STEEL	96	48	32.0	16	16			32.0		730.3			0.7		
I-39/SE RAMP	W1-8	117+32	RT	CHEVRON - (LEFT)	WOOD POST	30	36	7.5	16		7.5						16			
I-39/SE RAMP	W1-8	118+52	RT	CHEVRON - (LEFT)	WOOD POST	30	36	7.5	16		7.5						16			
I-39/SE RAMP	W1-8	119+72	RT	CHEVRON - (LEFT)	WOOD POST	30	36	7.5	16		7.5						16			
I-39/SE RAMP	R3-8LR	120+32	LT	ADVANCE LANE (WHITE)	WOOD POST	36	30	7.5			7.5									ATTACH TO EXISTING POST
I-39/SE RAMP	R3-8LR	120+32	RT	ADVANCE LANE (WHITE)	WOOD POST	36	30	7.5			7.5									ATTACH TO EXISTING POST
I-39/SE RAMP	W1-8	120+92	RT	CHEVRON - (LEFT)	WOOD POST	30	36	7.5			7.5									
I-39/SE RAMP	R5-1	121+59	LT	DO NOT ENTER	WOOD POST	48	48	16.0	20			16.0					20			
I-39/SE RAMP	-	121+59	LT	RED STRIP	WOOD POST	2	48	0.7			0.7									
I-39/SE RAMP	R5-1	121+59	RT	DO NOT ENTER	WOOD POST	48	48	16.0	20			16.0					20			
I-39/SE RAMP	-	121+59	RT	RED STRIP	WOOD POST	2	48	0.7			0.7									
I-39/SE RAMP	M3-4P	122+20	LT	WEST (WHITE)	WOOD POST	24	12	2.0												
I-39/SE RAMP	M1-I100	122+20	LT	STATE ROUTE - IL 38	WOOD POST	24	24	4.0												
I-39/SE RAMP	M6-2L	122+20	LT	LEFT ARROW (WHITE)	WOOD POST	21	15	2.2	16								16			
I-39/SE RAMP	M3-2P	122+20	LT	EAST (WHITE)	WOOD POST	24	12	2.0												
I-39/SE RAMP	M1-I100	122+20	LT	STATE ROUTE - IL 38	WOOD POST	24	24	4.0												
I-39/SE RAMP	M6-2R	122+20	LT	RIGHT ARROW (WHITE)	WOOD POST	21	12	1.8												
										TOTALS	1179.0	164.0	2010.0	83.0	15063.0	184.0	1528.0	106.5	60.0	

* FOR BIDDING PURPOSES ONLY. EXACT SIZE AND POST LENGTH SHALL BE PROVIDED AFTER FINAL GRADING IS COMPLETE.

MODEL: SHT_PLAN
FILE NAME: C:\Bentley\CONNECT\011\Organization\Civil\IDOT_Standards\Cell\IDOT_Sheets.cel

HBM ENGINEERING GROUP, LLC

USER NAME =	DESIGNED - KAO	REVISED -	
	DRAWN - KAO	REVISED -	
	CHECKED - AMI	REVISED -	
PLOT DATE = 2/6/2025	DATE - 2/6/2025	REVISED -	

STATE OF ILLINOIS
DEPARTMENT OF TRANSPORTATION

SCHEDULE OF QUANTITIES
IL 38

SCALE: | SHEET 19 OF 22 SHEETS | STA. | TO STA.

F.A.* RTE.	SECTION	COUNTY	TOTAL SHEETS	SHEET NO.
*	141-1HBR-3 & (9,10) R-3	OGLE	508	42

CONTRACT NO. 64N98

ILLINOIS | FED. AID PROJECT

*FAI ROUTE 39 (I-39) & FAP 567 (IL 38)

78009000			MODIFIED URETHANE PAVEMENT MARKING - LETTERS AND SYMBOLS					
ALIGNMENT	START STA	END STA	START OFFSET	END OFFSET	TYPE	BOUND	QUANTITIES	AREA (SQFT)
DEMENT RD	53+23.01	55+31.63	13.00' RT	1.47' RT	LEFT ARROW	NB	3	27
DEMENT RD	53+21.09	55+32.26	13.00' RT	13.00' RT	THRU AND RIGHT	NB	3	46
DEMENT RD	109+00.36	106+70.71	24.00' LT	24.00' LT	THRU AND RIGHT	SB	3	27
DEMENT RD	109+00.39	106+80.36	11.96' LT	11.88' LT	LEFT ARROW	SB	6	54
IL 38	633+49.51	636+49.51	11.00' RT	11.00' RT	LEFT ARROW	EB	3	27
IL 38	633+49.51	636+11.61	35.00' RT	35.00' RT	RIGHT ARROW	EB	3	27
IL 38	641+79.97	638+24.97	11.50' LT	11.50' LT	LEFT ARROW	WB	4	36
IL 38	641+79.97	638+36.45	35.50' LT	35.50' LT	RIGHT ARROW	WB	4	36
IL 38	682+63.70	685+09.37	11.13' RT	11.12' RT	LEFT ARROW	EB	3	27
IL 38	689+50.00	692+00.00	16.772 RT	30.010 RT	MERGE LEFT ARROW	EB	2	88
IL 38	1655+25.98	1657+30.87	26.00' RT	26.00' RT	THRU ARROW	EB	6	116
IL 38	1655+25.98	1657+30.87	26.00' RT	26.00' RT	RIGHT ARROW	EB	3	27
IL 38	1669+30.22	1671+26.30	0.12' RT	0.00' RT	THRU ARROW	EB	6	116
IL 38	1669+30.22	1671+26.30	0.12' RT	0.00' RT	LEFT ARROW	EB	3	27
IL 38	2661+32.42	2658+56.40	13.00' LT	13.03' LT	THRU ARROW	WB	4	77
IL 38	2661+32.42	2658+56.40	13.00' LT	13.03' LT	THRU AND LEFT	WB	2	31
IL 38	2675+65.64	2673+61.29	26.00' LT	26.00' LT	RIGHT ARROW	WB	3	27
IL 38	2675+65.64	2673+61.29	26.00' LT	26.00' LT	THRU ARROW	EB	6	116
I-39	13+81.77	14+96.79	2.81' LT	8.54' LT	MERGE LEFT ARROW	NB	2	18
I-39	57+57.50	59+59.04	12.00' LT	12.00' LT	RIGHT/LEFT ARROW	SB	6	54
I-39	73+54.97	74+68.05	2.59' LT	6.16' LT	MERGE LEFT ARROW	SB	2	88
I-39	120+13.86	121+67.02	12.50' LT	12.50'	RIGHT/LEFT ARROW	NB	6	54
							NOMINAL (10%)	115
							TOTAL:	1263

78011000	GROOVING FOR RECESSED PAVEMENT MARKING, LETTERS AND SYMBOLS	FOOT
	Subtotal from 78009000	1148
	NOMINAL (10%)	115
	TOTAL:	1263

78009008			MODIFIED URETHANE PAVEMENT MARKING - 8"				
ALIGNMENT	START STA	END STA	START OFFSET	END OFFSET	COLOR	BOUND	LENGTH (FT)
DEMENT RD	55+31.63	55+38.09	1.47' RT	13.00' RT	W	NB	12
DEMENT RD	112+49.16	112+49.16	14.75' RT	37.83' RT	W	EB	23
DEMENT RD	111+85.26	112+49.16	14.75' RT	37.83' RT	W	NB/EB	69
DEMENT RD	636+46.55	636+69.50	35.50' LT	52.85' LT	W	SB/WB	29
DEMENT RD	636+90.68	636+90.20	35.00' RT	104.44' RT	W	SB	69
DEMENT RD	636+92.78	636+76.41	83.98' LT	60.08' LT	W	SB/WB	29
DEMENT RD	636+92.78	636+92.55	83.98' LT	35.50' LT	W	SB	48
DEMENT RD	637+46.83	637+47.13	86.42' RT	43.00' RT	W	NB	43
DEMENT RD	637+46.83	637+89.06	86.42' RT	43.00' RT	W	NB/EB	61
DEMENT RD	637+47.54	637+47.61	35.50' LT	50.35' LT	W	NB	15
DEMENT RD	637+47.66	637+47.95	60.38' LT	117.82' LT	W	NB	57
IL 38	636+11.61	636+49.69	35.00' RT	55.53' RT	W	EB	43
IL 38	636+11.61	636+59.80	35.00' RT	35.00' RT	W	EB	48
IL 38	636+46.55	636+71.44	35.50' LT	35.50' LT	W	WB	25
IL 38	636+57.43	636+90.20	61.87' RT	104.44' RT	W	EB	54
IL 38	636+69.94	636+90.68	35.03' RT	35.00' RT	W	EB	21
IL 38	636+92.55	636+81.58	35.50' LT	35.50' LT	W	WB	11
IL 38	637+47.13	637+89.06	43.00' RT	43.00' RT	W	EB	42
IL 38	637+77.07	637+47.95	66.32' LT	117.82' LT	W	WB/NB	59
IL 38	638+36.45	637+47.54	35.50' LT	35.50' LT	W	WB	89
IL 38	638+36.45	637+87.96	35.50' LT	61.81' LT	W	WB/NB	56
IL 38	1657+30.87	1658+03.21	26.00' RT	26.00' RT	W	EB	73
IL 38	1658+03.21	2659+05.14	26.00' RT	0.00' RT	Y	WB	93
IL 38	1658+43.90	1659+26.63	0.09' LT	0.02' RT	Y	WB	83
IL 38	2657+53.59	2657+39.12	26.00' LT	26.00' LT	W	WB	14
I-39	10+49.60	10+55.48	69.59' RT	51.05' RT	Y	NB	20
I-39	10+60.50	11+23.10	41.53' RT	6.16' LT	Y	NB	80
I-39	11+23.10	12+03.24	6.16' LT	15.57' LT	W	NB	81
I-39	59+76.31	57+57.50	12.00' LT	12.00' LT	W	SB	217
I-39	70+57.14	71+51.80	60.01' LT	14.89' LT	W	SB	116
I-39	70+89.55	71+51.80	4.93' LT	14.89' LT	W	SB	63
I-39	71+51.80	72+21.43	14.89' LT	15.00' LT	W	SB	70
I-39	120+13.86	121+69.96	12.50' LT	12.50' LT	W	NB	156
I-39	121+69.96	122+49.36	12.50' LT	73.59' LT	W	NB	111
I-39	121+69.96	122+04.91	12.50' LT	3.90' LT	W	NB	36
I-39	122+04.91	122+48.05	3.90' LT	49.00' RT	Y	NB	70
I-39	122+48.05	122+52.08	49.00' RT	64.64' RT	W	NB	16
I-39	1657+18.77	1657+50.23	26.00' RT	33.46' RT	W	SB	34
I-39	1657+50.23	1658+04.35	33.46' RT	102.50' RT	Y	SB	90
I-39	1659+26.63	1658+95.10	0.02' RT	91.41' LT	W	SB	108
I-39	1671+26.27	1671+77.33	0.00' RT	173.16' LT	W	NB	222
I-39	2657+59.46	2657+45.90	34.10' LT	26.00' LT	W	SB	16
I-39	2657+97.56	2658+11.23	157.05' LT	102.65' LT	W	SB	31
I-39	2658+11.23	2657+59.46	102.65' LT	34.10' LT	Y	SB	76
I-39	2659+01.48	2659+05.14	104.02' RT	0.00' RT	W	SB	112
I-39	2673+73.32	2673+38.84	26.00' LT	35.65' LT	W	WB	38
						NOMINAL (10%)	293
						TOTAL:	3223

78009012			MODIFIED URETHANE PAVEMENT MARKING - 12"				
ALIGNMENT	START STA	END STA	START OFFSET	END OFFSET	COLOR	BOUND	LENGTH (FT)
DEMENT RD	51+37.63	55+34.26	3.00' RT	13.69' LT	Y	MEDIAN	65
DEMENT RD	53+21.09	55+31.63	13.00' RT	1.47' RT	W	MEDIAN	121
DEMENT RD	109+00.36	111+34.16	2.75' RT	9.25' LT	Y	MEDIAN	27
DEMENT RD	110+52.57	109+89.13	38.38' LT	38.27' LT	W	SHOULDER	41
DEMENT RD	111+85.26	112+49.16	14.75' RT	14.75' RT	W	PAINTED ISLAND	55
DEMENT RD	112+64.28	111+60.46	82.41' LT	38.22' LT	W	SHOULDER	57
DEMENT/IL 38 SW	636+11.61	636+90.68	35.00' RT	35.00' RT	W	ISLAND	118
DEMENT/IL 38 NW	636+92.55	636+46.55	35.50' LT	35.50' LT	W	ISLAND	43
DEMENT RD/IL 38 NW	636+92.25	636+71.08	153.21' LT	35.00' LT	W	SHOULDER	65
DEMENT/IL 38 SE	637+47.13	637+89.06	43.00' RT	43.00' RT	W	PAINTED ISLAND	175
DEMENT/IL 38 NE	638+36.45	637+47.54	35.50' LT	35.50' LT	W	ISLAND	132
IL 38/I-39 RT LN ON RAMP	10+49.60	11+23.10	69.59' RT	6.16' LT	Y	ISLAND	33
I-39/IL 38 RT LN OFF RAMP	11+76.82	10+68.41	32.09' LT	127.95' LT	Y	SHOULDER	118
I-39/IL 38 LT LN OFF RAMP	121+69.96	122+49.36	12.50' LT	73.59' LT	W	ISLAND	45
I-39/IL 38 RT LN OFF RAMP	122+04.91	122+48.05	3.90' LT	49.00' RT	Y	ISLAND	20
I-39/IL 38 LT LN OFF RAMP	1658+59.22	2657+39.12	25.96' RT	26.00' LT	W	ISLAND	160
I-39/IL 38 LT LN OFF RAMP	1659+11.51	1660+17.99	99.76' LT	0.00' RT	Y	SHOULDER	155
I-39/IL 38 RT LN OFF RAMP	1673+14.11	1674+25.56	168.91' RT	26.00' RT	W	SHOULDER	113
I-39/IL 38 RT LN OFF RAMP	2657+48.78	2656+51.35	52.24' LT	26.00' LT	W	SHOULDER	45
I-39/IL 38 RT LN OFF RAMP	2657+59.46	2657+45.90	34.10' LT	26.00' LT	W	ISLAND	3
I-39/IL 38 RT LN OFF RAMP	2657+97.56	2658+11.23	157.05' LT	102.65' LT	W	ISLAND	32
I-39/IL 38 RT LN OFF RAMP	2657+97.56	2657+58.25	157.05' LT	59.61' LT	W	SHOULDER	54
I-39/IL 38 LT LN OFF RAMP	2658+09.77	2657+54.89	103.37 'LT	34.68' LT	Y	ISLAND	65
I-39/IL 38 RT LN OFF RAMP	2658+11.23	2657+59.46	102.65' LT	34.10' LT	Y	ISLAND	23
I-39/IL 38 LT LN OFF RAMP	2671+87.34	2670+71.60	106.62' RT	0.00' RT	Y	SHOULDER	137
IL 38/I-39 RT LN ON RAMP	70+34.44	72+02.35	105.72' RT	0.00' LT	W	SHOULDER	100
IL 38/I-39 LT LN ON RAMP	71+51.80	70+57.14	14.89' LT	60.01' LT	W	ISLAND	65
IL 38/I-39 RT LN ON RAMP	1657+54.63	70+92.88	38.06' RT	2.93' LT	Y	ISLAND	52
IL 38/I-39 LT LN ON RAMP	2659+49.30	2659+28.58	0.05' RT	130.13' RT	Y	SHOULDER	120
IL 38/I-39 RT LN ON RAMP	2673+21.08	11+24.91	56.78' LT	2.61' LT	Y	ISLAND	66
IL 38/I-39 LT LN ON RAMP	2673+61.29	1671+26.27	26.00' LT	0.00' RT	W	ISLAND/SHOULDER	95
IL 38/I-39 RT LN ON RAMP	2673+89.61	2673+43.23	26.00' LT	48.99' LT	W	ISLAND/SHOULDER	34
IL 38	694+70.97	692+50.47	18.98' RT	5.36' RT	Y	MEDIAN	90
						NOMINAL (10%)	253
						TOTAL:	2781

78009004			MODIFIED URETHANE PAVEMENT MARKING - 4"				
ALIGNMENT	START STA	END STA	START OFFSET	END OFFSET	COLOR	BOUND	LENGTH (FT)
DEMENT RD	51+54.05	53+21.09	11.12' RT	13.00' RT	W	NB	42
DEMENT RD	54+56.24	51+66.41	24.44' LT	16.98' LT	W	SB	80
DEMENT RD	55+34.26	51+37.63	13.69' LT	3.00' RT	Y	SB S OF IL38	808
DEMENT RD	55+34.26	51+37.63	13.69' LT	3.00' RT	Y	SB S OF IL38	802
DEMENT RD	107+63.52	109+00.36	15.75' RT	15.75' RT	W	NB	40
DEMENT RD	109+00.34	109+00.36	0.46' LT	3.21' RT	Y	EB/WB	4
DEMENT RD	109+00.36	110+02.21	3.21' RT	3.24' RT	Y	NB	102
DEMENT RD	109+00.36	111+34.16	15.75' RT	14.75' RT	W	NB N OF IL38	60
DEMENT RD	109+16.05	107+60.87	38.67' LT	37.00' LT	W	SB	155
DEMENT RD	110+02.21	111+34.16	3.24' RT	2.75' RT	W	NB N OF IL38	34
DEMENT RD	110+02.21	111+34.18	3.24' RT	8.79' LT	Y	NB	133
DEMENT RD	110+52.57	109+89.13	38.38' LT	38.27' LT	W	SB	67
DEMENT RD	111+34.15	109+00.34	9.71' LT	0.46' LT	Y	SB	234
DEMENT RD	111+34.18	112+49.19	8.79' RT	8.76' LT	Y	NB	115
DEMENT RD	112+49.16	109+00.36	9.76' LT	24.00' LT	W	SB	88
DEMENT RD	112+49.16	111+34.15	9.76' LT	9.71' LT	Y	SB	115
DEMENT RD	112+64.28	111+60.46	82.41' LT	38.22' LT	W	SB	135
DEMENT RD	636+92.16	635+71.08	161.05' LT	35.00' LT	W	SB	191
DEMENT RD	636+92.16	636+92.25	161.05' LT	83.98' LT	W	SB	20
DEMENT RD	637+76.79	638+62.06	78.57' RT	41.27' RT	W	NB	95
IL 38	620+37.59	631+29.51	35.55' RT	35.42' RT	W	EB	1092
IL 38	620+37.96	631+19.50	11.41' RT	11.13' RT	Y	EB	1082
IL 38	631+18.52	620+38.31	10.97' LT	10.76' LT	Y	WB	1080
IL 38	631+19.50	633+49.47	11.13' RT	0.49' LT	Y	EB	220
IL 38	631+29.51	633+49.51	35.42' RT	46.70' RT	W	EB	220
IL 38	633+49.47	636+55.63	0.49' LT	3.92' LT	Y	EB	308
IL 38	633+49.51	636+37.14	46.70' RT	70.87' RT	W	EB	293
IL 38	635+71.08	620+38.68	35.00' LT	34.83' LT	W	WB	1532
IL 38	636+55.63	631+13.89	3.92' LT	23.07' LT	Y	EB	540
IL 38	637+16.90	638+21.77	77.05' LT	22.75' RT	W	SB TO EB	38
IL 38	638+32.17	639+81.10	2.26' RT	10.75' RT	Y	EB	150
IL 38	638+62.06	1652+35.64	41.27' RT	24.13' RT	W	EB	1374
IL 38	638+62.08	638+03.64	48.19' LT	73.04' LT	W	WB	64
IL 38	639+81.10	1652+35.64	10.75' RT	0.00' LT	Y	EB	1255
IL 38	641+79.97	638+62.08	47.50' LT	48.19' LT	W	WB	318
IL 38	641+79.97	638+32.17	0.84' RT	2.26' RT	Y	WB	349
IL 38	643+99.97	641+79.97	35.50' LT	47.50' LT	W	WB	220
IL 38	643+99.97	641+79.97	11.36' LT	0.84' RT	Y	WB	220
IL 38	680+74.70	682+85.21	11.13' RT	0.65' LT	Y	EB	211

MODEL: SHT_PLAN
FILE NAME: C:\Bentley\CONNECT\011\Organization\Civil\IDOT_Standards\Cell\IDOT_Sheets.cel

HBM ENGINEERING GROUP, LLC

USER NAME =	DESIGNED - KAO	REVISED -
	DRAWN - KAO	REVISED -
	CHECKED - AMI	REVISED -
PLOT DATE = 2/6/2025	DATE - 2/6/2025	REVISED -

STATE OF ILLINOIS
DEPARTMENT OF TRANSPORTATION

SCHEDULE OF QUANTITIES
IL 38

SCALE: SHEET 20 OF 22 SHEETS STA. TO STA.

F.A.* RTE.	SECTION	COUNTY	TOTAL SHEETS	SHEET NO.
*	141-1HBR-3 & (9,10) R-3	OGLE	508	43
		CONTRACT NO. 64N98		
	ILLINOIS	FED. AID PROJECT		

*FAI ROUTE 39 (I-39) & FAP 567 (IL 38)

78011025	GROOVING FOR RECESSED PAVEMENT MARKING 5"	FOOT
	SUBTOTAL FROM 78009004	46443
	NOMINAL (10%)	4644
	TOTAL:	51088

78009004			MODIFIED URETHANE PAVEMENT MARKING - 4"				
ALIGNMENT	START STA	END STA	START OFFSET	END OFFSET	COLOR	BOUND	LENGTH (FT)
IL 38	682+85.21	685+09.37	0.65' LT	9.49' LT	Y	EB	229
IL 38	683+97.83	2680+00.52	42.90' LT	24.00' LT	W	WB	438
IL 38	684+98.84	683+97.83	60.69' LT	42.90' LT	W	WB	103
IL 38	685+09.37	2680+00.52	9.49' LT	0.00' LT	Y	WB	554
IL 38	685+99.46	686+79.10	9.47' LT	11.14' RT	Y	EB	85
IL 38	686+60.04	686+00.09	42.89' LT	61.20' LT	W	WB	64
IL 38	686+18.66	685+99.46	18.77' LT	9.47' LT	Y	WB	22
IL 38	686+79.10	692+49.55	11.14' RT	21.52' RT	Y	EB	571
IL 38	689+45.32	686+18.66	16.17' LT	18.77' LT	Y	WB	327
IL 38	692+49.55	694+70.99	21.52' RT	20.02' RT	Y	EB	221
IL 38	692+49.56	694+79.17	21.24' RT	19.71' RT	Y	EB	230
IL 38	692+50.48	689+45.32	5.16' RT	16.17' LT	Y	WB	306
IL 38	694+70.97	692+50.48	18.98' RT	5.16' RT	Y	WB	221
IL 38	694+70.99	696+60.08	20.02' RT	22.60' RT	Y	EB	189
IL 38	694+79.17	692+50.47	19.71' RT	5.36' RT	Y	WB	229
IL 38	694+95.34	696+60.12	34.92' RT	34.56' RT	W	EB	165
IL 38	695+10.39	686+60.04	4.65' RT	42.89' LT	W	WB	852
IL 38	696+60.04	695+10.39	9.22' RT	4.65' RT	W	WB	150
IL 38	696+60.04	694+70.97	9.22' RT	18.98' RT	Y	WB	189
IL 38	1652+35.64	1653+18.33	24.13' RT	26.00' RT	W	EB	82
IL 38	1652+35.64	1654+36.41	0.00' LT	0.00' RT	Y	EB	201
IL 38	1653+18.33	1655+25.98	26.00' RT	39.00'RT	W	EB	208
IL 38	1653+18.33	1655+25.98	26.00' RT	26.00' RT	W	EB	52
IL 38	1654+36.41	1657+63.18	0.00' RT	3.29' LT	Y	EB	328
IL 38	1655+25.98	1657+64.33	39.00' RT	70.41' RT	W	EB	264
IL 38	1657+56.48	1658+12.66	0.00' LT	0.01' RT	Y	EB	14
IL 38	1657+56.48	1658+40.48	13.00' RT	13.00' RT	W	EB	22
IL 38	1657+63.18	2654+37.62	3.29' LT	0.00' LT	Y	WB	327
IL 38	1658+03.21	1657+64.91	26.00' RT	6.14' LT	Y	WB	14
IL 38	1658+03.21	1658+59.22	26.00' RT	25.96' RT	W	EB	14
IL 38	1658+12.66	2657+39.12	0.01' RT	26.00' LT	W	WB	64
IL 38	1658+28.24	1658+12.66	0.04' LT	0.01' RT	Y	EB	16
IL 38	1658+50.97	1658+12.66	32.14' RT	0.01' RT	W	WB	14
IL 38	1660+93.60	1660+17.99	0.00' RT	0.00' RT	Y	WB	75
IL 38	1661+94.45	2658+52.62	26.00' RT	29.29' LT	W	EB	328
IL 38	1663+05.62	1660+93.60	0.00' RT	0.00' RT	Y	WB	212
IL 38	1663+19.60	1661+94.45	25.82' RT	26.00' RT	W	EB	131
IL 38	1667+30.39	1663+05.62	0.04' RT	0.00' RT	Y	WB	425
IL 38	1667+30.39	1669+30.22	0.04' RT	0.12' RT	W	EB	50
IL 38	1667+47.38	1663+19.60	25.83' RT	25.82' RT	W	EB	429
IL 38	1668+70.33	1667+47.38	26.00' RT	25.83' RT	W	EB	129
IL 38	1671+15.40	1667+30.38	13.00 'LT	0.00' LT	Y	WB	390
IL 38	1671+26.35	1672+20.94	0.00' RT	0.00' LT	W	EB	95
IL 38	1671+26.35	1672+20.94	0.00' RT	0'00' LT	Y	EB	95
IL 38	1672+12.03	1668+70.33	29.29' RT	26.00' RT	W	EB	328
IL 38	1672+24.24	1673+06.24	13.00' RT	13.00' RT	W	EB	22
IL 38	1672+36.49	2672+61.39	0.04' LT	25.99' LT	Y	EB	16
IL 38	1674+25.56	1675+26.59	26.00' RT	26.00' RT	W	EB	106
IL 38	1675+26.59	1678+31.46	26.00' RT	24.00' RT	W	EB	304
IL 38	1677+24.99	1678+31.46	0.00' RT	0.00' LT	Y	EB	106
IL 38	1678+31.46	694+95.34	24.00' RT	34.92' RT	W	EB	1706
IL 38	1678+31.46	680+74.70	0.00' LT	11.13' RT	Y	EB	285
IL 38	2652+38.51	643+99.97	0.00' RT	11.36' LT	Y	WB	839
IL 38	2652+38.51	643+99.97	23.97' LT	35.50' LT	W	WB	838
IL 38	2654+37.62	2652+38.51	0.00' LT	0.00' RT	Y	WB	199
IL 38	2654+37.62	2652+38.51	26.00' LT	23.97' LT	W	WB	193
IL 38	2656+51.35	2654+37.62	26.00' LT	26.00' LT	W	WB	225
IL 38	2658+52.62	2661+94.37	29.29' LT	26.00' LT	W	WB	328
IL 38	2658+56.40	2657+58.41	13.03' LT	13.00' LT	W	WB	26
IL 38	2659+05.14	2658+29.32	0.00' LT	0.00' LT	Y	WB	46
IL 38	2659+49.30	2663+00.00	0.05' RT	0.00' RT	Y	EB	351
IL 38	2661+94.37	2663+19.52	26.00' LT	25.82' LT	W	WB	131
IL 38	2663+00.00	2668+00.00	0.00' RT	0.00' RT	Y	EB	500
IL 38	2663+19.52	2667+44.96	25.82' LT	25.77' LT	W	WB	427
IL 38	2667+44.96	2668+70.20	25.77' LT	26.00' LT	W	WB	131
IL 38	2668+00.00	2670+71.60	0.00' RT	0.00' RT	Y	EB	272
IL 38	2668+00.00	2671+68.89	0.00' RT	26.62' RT	Y	EB	377
IL 38	2668+70.20	1672+12.03	26.00' LT	29.29' RT	W	WB	328
IL 38	2670+71.60	2671+77.38	0.00' RT	19.82' RT	Y	EB	111
IL 38	2671+61.43	2672+51.97	29.30' LT	0.00' LT	Y	WB	91
IL 38	2671+77.38	2671+87.34	19.82' RT	106.62' RT	Y	NB	96
IL 38	2671+87.34	2671+79.17	106.62' RT	134.79' RT	Y	NB	30
IL 38	2672+13.67	2672+51.97	32.14' LT	0.00' LT	W	EB	14
IL 38	2672+51.97	1673+39.36	0.00' LT	26.00' RT	W	EB	79

78009004			MODIFIED URETHANE PAVEMENT MARKING - 4"				
ALIGNMENT	START STA	END STA	START OFFSET	END OFFSET	COLOR	BOUND	LENGTH (FT)
IL 38	2672+61.39	2672+11.39	25.99' LT	26.00 LT	W	WB	14
IL 38	2672+61.39	2672+99.74	25.99' LT	6.14' RT	Y	EB	14
IL 38	2673+01.45	1677+24.99	3.28' RT	0.00' RT	Y	EB	425
IL 38	2673+01.97	2672+51.97	0.00' RT	0.00' LT	Y	WB	14
IL 38	2673+06.16	2672+08.13	13.00' LT	12.99' LT	W	WB	26
IL 38	2673+30.51	2673+30.85	60.59' LT	220.42' LT	W	NB	169
IL 38	2673+61.29	2672+61.39	26.00' LT	25.99' LT	W	WB	102
IL 38	2673+89.61	2673+37.89	39.00' LT	53.07' LT	W	WB	59
IL 38	2675+19.74	2673+89.61	39.00' LT	39.00' LT	W	WB	140
IL 38	2677+24.51	2673+01.45	0.00' RT	3.28' RT	Y	WB	424
IL 38	2677+69.68	2675+19.74	24.00' LT	39.00' LT	W	WB	251
IL 38	2677+69.68	2675+65.64	24.00' LT	26.00' LT	W	WB	50
IL 38	2680+00.52	2677+69.68	24.00' LT	24.00' LT	W	WB	231
IL 38	2680+00.52	2677+24.51	0.00' LT	0.00' LT	Y	WB	276
I-39	10+75.65	12+44.50	59.21' RT	0.00' RT	W	NB	188
I-39	11+76.82	10+68.41	32.09' LT	127.95' LT	Y	NB	181
I-39	12+21.05	12+44.50	0.00' RT	0.00' RT	W	NB	24
I-39	12+44.50	11+76.82	29.67' LT	32.09' LT	Y	NB	68
I-39	12+44.50	15+19.08	0.00' RT	0.47' RT	W	NB	275
I-39	12+44.50	15+21.66	29.67' LT	22.70' LT	Y	NB	263
I-39	15+19.08	19+31.02	0.47' RT	0.24' RT	W	NB	412
I-39	15+21.66	19+32.49	22.70' LT	15.08' LT	Y	NB	405
I-39	19+31.02	22+00.11	0.24' RT	0.30' RT	W	NB	269
I-39	19+32.49	22+00.50	15.08' LT	14.72' LT	Y	NB	274
I-39	22+00.11	24+49.82	0.30' RT	0.11' RT	W	NB	250
I-39	22+00.50	24+51.20	14.72' LT	14.28' LT	Y	NB	255
I-39	46+60.88	49+27.11	16.41' LT	16.75' LT	Y	SB	270
I-39	46+62.05	49+27.53	1.07' RT	0.00' RT	W	SB	265
I-39	49+27.11	51+73.16	16.75' LT	17.78' LT	Y	SB	251
I-39	49+27.53	51+67.46	0.00' RT	0.86' LT	W	SB	240
I-39	51+67.46	53+25.93	0.86' LT	0.39' LT	W	SB	159
I-39	51+73.16	53+59.62	17.78' LT	18.09' LT	Y	SB	190
I-39	53+25.93	55+14.00	0.39' LT	0.00' LT	W	SB	188
I-39	53+59.62	55+14.00	18.09' LT	17.25' LT	Y	SB	154
I-39	55+13.81	59+41.72	17.21' LT	24.00' LT	Y	SB	460
I-39	55+14.00	59+62.13	0.00' LT	0.51' RT	W	SB	448
I-39	70+34.44	72+02.35	105.72' RT	0.00' LT	W	SB	234
I-39	71+91.08	77+38.00	30.00' LT	17.00' LT	Y	SB	532
I-39	72+02.35	77+38.00	0.00' LT	0.01' RT	W	SB	536
I-39	77+38.00	79+46.82	0.01' RT	0.00' LT	W	SB	209
I-39	77+38.00	79+48.28	17.00' LT	18.53' LT	Y	SB	215
I-39	79+46.82	81+42.75	0.00' LT	16.29' RT	W	SB	195
I-39	79+48.28	81+44.89	18.53' LT	0.60' LT	Y	SB	200
I-39	81+42.75	82+86.88	16.29' RT	30.83' RT	W	SB	140
I-39	81+44.89	82+65.85	0.60' LT	13.24' RT	Y	SB	121
I-39	82+65.85	84+16.44	13.24' RT	17.91' RT	Y	SB	149
I-39	82+86.88	84+26.37	30.83' RT	33.48' RT	W	SB	136
I-39	84+16.44	86+01.93	17.91' RT	8.41' RT	Y	SB	186
I-39	84+26.37	86+01.81	33.48' RT	25.22' RT	W	SB	176
I-39	106+79.38	109+63.90	16.20' LT	16.83' LT	Y	NB	287
I-39	106+80.76	109+62.94	0.82' RT	1.13' RT	W	NB	282
I-39	109+62.94	113+67.06	1.13' RT	0.59' LT	W	NB	403
I-39	109+63.90	113+53.99	16.83' LT	16.57' LT	Y	NB	398
I-39	113+53.99	115+99.40	16.57' LT	15.67' LT	Y	NB	197
I-39	113+67.06	116+00.54	0.59' LT	0.00' LT	W	NB	233
I-39	115+99.40	117+58.58	15.67' LT	16.07' LT	Y	NB	154
I-39	116+00.54	117+60.00	0.00' LT	0.14' RT	W	NB	159
I-39	117+58.58	121+23.51	16.07' LT	25.00' LT	Y	NB	354
I-39	117+60.00	121+23.51	0.14' RT	0.00' RT	W	NB	363
I-39	1659+11.51	1660+17.99	99.76' LT	0.00' RT	Y	SB	209
I-39	1672+85.51	1673+39.36	96.43' RT	26.00' RT	Y	NB	93
I-39	1672+87.53	1671+61.43	132.27' RT	0.00' LT	W	NB	117
I-39	1672+87.53	1672+85.51	132.27' RT	96.43' RT	W	NB	36
I-39	1673+14.11	1674+25.56	168.91' RT	26.00' RT	W	NB	245
I-39	2657+48.78	2656+51.35	52.24' LT	26.00' LT	W	NB	116
I-39	2657+97.56	2657+58.25	157.05' LT	59.61' LT	W	NB	111
I-39	2659+49.30	2659+28.58	0.05' RT	130.13' RT	Y	SB	189
I-39	2671+68.89	2671+79.17	26.62' RT	134.79' RT	Y	NB	156
I-39	2673+21.08	2672+97.81	56.78' LT	130.97' LT	Y	NB	80
I-39	2673+41.50	2673+27.88	36.49' LT	48.75' LT	Y	WB	19
I-39	2673+61.29	2673+41.50	26.00' LT	36.49' LT	W	WB	24
						NOMINAL (10%)	4644
						TOTAL:	51088

78011045	GROOVING FOR RECESSED PAVEMENT MARKING 9"	FOOT
	SUBTOTAL FROM 78009008	2930
	NOMINAL (10%)	293
	TOTAL:	3223

MODEL: SHT_PLAN
FILE NAME: C:\Bentley\CONNECT1011\Organization-Civil\IDOT_Standards\Cell\IDOT_Sheets.cel

HBM ENGINEERING GROUP, LLC

USER NAME =	DESIGNED - KAO	REVISED -
	DRAWN - KAO	REVISED -
	CHECKED - AMI	REVISED -
PLOT DATE = 2/6/2025	DATE - 2/6/2025	REVISED -

STATE OF ILLINOIS
DEPARTMENT OF TRANSPORTATION

SCHEDULE OF QUANTITIES
IL 38

SCALE: | SHEET 21 OF 22 SHEETS | STA. | TO STA.

F.A.* RTE.	SECTION	COUNTY	TOTAL SHEETS	SHEET NO.
*	141-1HBR-3 & (9,10) R-3	OGLE	508	44
		CONTRACT NO. 64N98		
	ILLINOIS	FED. AID PROJECT		

*FAI ROUTE 39 (I-39) & FAP 567 (IL 38)

78004635			PREFORMED PLASTIC PAVEMENT MARKING, TYPE D - STANDARD - LINE 7"				
ALIGNMENT	START STA	END STA	START OFFSET	END OFFSET	COLOR	BOUND	LENGTH (FT)
IL 38	620+38.02	631+13.33	23.47' RT	23.07' RT	W	EB	270
IL 38	631+13.33	636+43.86	23.07' RT	23.00' RT	W	EB	140
IL 38	631+13.89	620+38.00	23.07' LT	23.00' LT	W	WB	270
IL 38	636+43.88	631+13.89	23.00' LT	23.07' LT	W	WB	140
IL 38	638+24.95	652+35.61	22.91' RT	12.06' RT	W	EB	360
IL 38	652+38.51	638+24.97	22.75' LT	23.50' LT	W	WB	350
IL 38	677+90.00	689+42.61	22.97' RT	26.43' RT	W	EB	290
IL 38	684+73.12	679+60.00	60.69' LT	30.72' LT	W	WB	130
IL 38	693+46.46	686+18.37	2.95' RT	18.77' LT	W	WB	190
IL 38	1652+35.61	1654+95.95	12.06' RT	13.00' RT	W	EB	70
IL 38	1658+59.28	1669+23.19	13.00' RT	13.00' RT	W	EB	270
IL 38	1673+06.24	1678+31.46	13.00' RT	12.00' RT	W	EB	140
IL 38	2657+58.41	2652+38.51	13.00' LT	11.99' LT	W	WB	140
IL 38	2671+97.68	2661+32.42	13.00' LT	13.00' LT	W	WB	270
IL 38	2679+93.54	2675+68.26	11.97' LT	13.00' LT	W	WB	100
I-39	12+44.50	15+01.68	14.84' LT	11.91' LT	W	NB	40
I-39	72+21.43	73+55.45	15.00' LT	12.87' LT	W	SB	40
						NOMINAL (10%)	321
						TOTAL:	3531

78011040	GROOVING FOR RECESSED PAVEMENT MARKING - 8"	FOOT
SUBTOTAL FROM 78004635		3210
	NOMINAL (10%)	321
	TOTAL:	3531

78004645			PREFORMED PLASTIC PAVEMENT MARKING, TYPE D - STANDARD - LINE 9"				
ALIGNMENT	START STA	END STA	START OFFSET	END OFFSET	COLOR	BOUND	LENGTH (FT)
DEMENT RD	636+51.93	636+70.91	70.41' LT	51.44' LT	W	SB	27
DEMENT RD	636+58.44	636+78.06	78.09' LT	58.46' LT	W	SB	28
DEMENT RD	636+92.64	637+51.66	56.67' LT	60.67' LT	W	NB/SB	63
DEMENT RD	636+92.59	637+51.61	46.34' LT	50.64' LT	W	NB/SB	63
IL 38	636+44.85	636+60.06	77.24' RT	58.64' RT	W	EB	24
IL 38	636+59.80	636+71.77	35.00' RT	37.50' LT	W	EB/WB	73
IL 38	636+69.94	636+81.92	35.03' RT	37.48' LT	W	EB/WB	73
IL 38	637+77.07	637+95.71	66.32' LT	79.67' LT	W	WB	23
IL 38	637+84.49	638+03.64	59.33' LT	73.04' LT	W	WB	24
IL 38	1658+28.24	1658+59.22	0.04' LT	25.96' RT	W	EB	40
IL 38	1658+43.90	1685+74.76	0.09' LT	26.01' RT	W	EB	40
IL 38	1671+89.95	1672+20.94	26.00' RT	0.00' LT	W	EB	40
IL 38	1672+05.51	1672+36.49	26.00' RT	0.04' LT	W	EB	40
IL 38	2673+15.18	2673+37.44	54.48' LT	63.66' LT	W	WB	25
IL 38	2673+22.02	2673+44.75	46.47' LT	56.19' LT	W	WB	27
I-39	2657+48.78	2657+74.76	52.24' LT	59.61' LT	W	SB	27
I-39	2657+58.25	2657+82.86	59.61' LT	51.32' LT	W	SB	26
						NOMINAL (10%)	67
						TOTAL:	732

78011050	GROOVING FOR RECESSED PAVEMENT MARKING - 10"	FOOT
SUBTOTAL FROM 78004645		665
	NOMINAL (10%)	67
	TOTAL:	732

78004655			PREFORMED PLASTIC PAVEMENT MARKING, TYPE D - STANDARD - LINE 11"				
ALIGNMENT	START STA	END STA	START OFFSET	END OFFSET	COLOR	BOUND	LENGTH (FT)
DEMENT RD	53+21.09	55+31.63	13.00' RT	1.47' RT	W	NB	211
DEMENT RD	53+21.09	55+38.09	13.00' RT	13.00' RT	W	NB	217
DEMENT RD	109+00.39	106+80.36	11.96' LT	11.88' LT	W	SB	220
DEMENT RD	109+00.36	106+70.71	24.00' LT	24.00' LT	W	SB	230
DEMENT RD	111+34.16	112+49.23	2.75' RT	2.82' RT	W	NB	115
DEMENT RD	111+34.16	112+49.16	14.75' RT	14.75' RT	W	NB	115
IL 38	633+49.51	636+49.51	11.00' RT	11.00' RT	W	EB	300
IL 38	633+49.51	636+11.61	35.00' RT	35.00' RT	W	EB	262
IL 38	641+79.97	638+24.97	11.50' LT	11.50' LT	W	WB	357
IL 38	641+79.97	638+36.45	35.50' LT	35.50' LT	W	WB	343
IL 38	682+63.70	685+00.06	11.21' RT	11.12' RT	W	EB	236
IL 38	1654+95.95	1657+57.50	13.00' RT	13.00' RT	W	EB	267
IL 38	1669+30.22	1671+26.35	0.12' RT	0.00' RT	W	EB	196
IL 38	1655+25.98	1657+30.87	26.00' RT	26.00' RT	W	EB	215
IL 38	1669+23.19	1671+96.08	13.00' RT	13.03' RT	W	EB	266
IL 38	2661+32.42	2658+56.40	13.00' RT	13.00' LT	W	WB	267
IL 38	2675+68.26	2673+06.16	13.00' LT	13.00' LT	W	WB	266
						NOMINAL (10%)	408
						TOTAL:	4493

78011060	GROOVING FOR RECESSED PAVEMENT MARKING 12"	FOOT
SUBTOTAL FROM 78004655		4084
	NOMINAL (10%)	408
	TOTAL:	4493

78004660			PREFORMED PLASTIC PAVEMENT MARKING, TYPE D - STANDARD - LINE 12"					
ALIGNMENT	START STA	END STA	START OFFSET	END OFFSET	TYPE	BOUND	QUANTITIES	LENGTH (FT)
DEMENT RD	636+51.93	636+70.91	70.41' LT	51.44' LT	CROSSWALK HATCH	SB	9.00	90
DEMENT RD	636+92.64	637+51.66	56.37' LT	60.67' LT	CROSSWALK HATCH	NB/SB	21.00	210
IL 38	636+37.14	636+52.85	70.87' RT	51.57' RT	CROSSWALK HATCH	EB	8.00	80
IL 38	636+59.80	636+71.77	35.00' RT	37.50' LT	CROSSWALK HATCH	EB/WB	24.00	240
IL 38	637+84.46	638+03.64	59.31' LT	73.04' LT	CROSSWALK HATCH	WB	7.00	70
IL 38	1658+43.90	1658+74.76	0.09' LT	26.01' RT	CROSSWALK HATCH	WB	8*15.5FT	124
IL 38	1671+89.95	1672+20.94	26.00' RT	0.00' LT	CROSSWALK HATCH	EB	8*15.5FT	124
I-39	2657+48.78	2657+74.72	52.24' LT	43.50' LT	CROSSWALK HATCH	SB	8*11.4FT	91
I-39	2673+22.02	2673+44.75	46.47' LT	56.19' LT	CROSSWALK HATCH	WB	8*10.75FT	86
							NOMINAL (10%)	112
							TOTAL:	1227

78011065	GROOVING FOR RECESSED PAVEMENT MARKING 13"	FOOT
SUBTOTAL FROM 78004660		1115
SUBTOTAL FROM 78009012		2528
	NOMINAL (10%)	364
	TOTAL:	4008

79004720			PREFORMED PLASTIC PAVEMENT MARKING, TYPE D - STANDARD - LINE 24"				
ALIGNMENT	START STA	END STA	START OFFSET	END OFFSET	COLOR	BOUND	LENGTH (FT)
DEMENT RD	55+31.63	N/A	1.47' RT	N/A	W	NB	12
DEMENT RD	106+70.71	N/A	24.00' LT	N/A	W	SB	12
DEMENT RD	106+77.42	N/A	58.66' LT	N/A	W	SB	16
DEMENT RD	106+78.36	N/A	0.25' RT	N/A	W	SB	24
DEMENT RD	637+47.00	N/A	62.09' RT	N/A	W	NB	13
DEMENT RD	637+76.79	N/A	78.57' RT	N/A	W	NB	20
IL 38	636+31.42	N/A	66.81' RT	N/A	W	EB	20
IL 38	636+50.51	636+50.51	1.00' LT	35.00' RT	W	EB	36
IL 38	638+03.31	N/A	50.63' LT	N/A	W	WB	19
IL 38	638+24.97	N/A	11.50' LT	N/A	W	WB	24
IL 38	638+34.97	N/A	0.92' RT	N/A	W	WB	13
IL 38	1657+56.48	1657+56.48	0.00' LT	26.00' RT	W	EB	26
IL 38	1671+80.16	N/A	26.00' RT	N/A	CROSSBAR	EB	41
IL 38	2658+59.32	2658+59.32	0.00' LT	26.00' LT	CROSSBAR	WB	26
IL 38	2673+08.16	N/A	0.00' LT	N/A	W	WB	26
IL 38	2673+46.23	N/A	48.99' LT	N/A	CROSSBAR	WB	17
I-39	1659+05.78	N/A	18.26' LT	N/A	CROSSBAR	SB	33
I-39	1673+26.56	N/A	45.90' RT	N/A	CROSSBAR	NB	14
I-39	2657+70.69	N/A	61.75' LT	N/A	CROSSBAR	SB	35
I-39	2671+77.38	N/A	19.82' RT	N/A	CROSSBAR	NB	14
						NOMINAL (10%)	44
						TOTAL:	484

78011125	GROOVING FOR RECESSED PAVEMENT MARKING 25"	FOOT
SUBTOTAL FROM 78004720		439
	NOMINAL (10%)	44
	TOTAL:	484

MODEL: SHT_PLAN
FILE NAME: C:\Bentley\CONNECT1011\Organization-Civil\IDOT_Standards\Cell\IDOT_Sheets.cel

HBM ENGINEERING GROUP, LLC

USER NAME =	DESIGNED - KAO	REVISED -	
	DRAWN - KAO	REVISED -	
	CHECKED - AMI	REVISED -	
PLOT DATE = 2/6/2025	DATE - 2/6/2025	REVISED -	

STATE OF ILLINOIS
DEPARTMENT OF TRANSPORTATION

SCHEDULE OF QUANTITIES
IL 38

SCALE: SHEET 22 OF 22 SHEETS STA. TO STA.

F.A.* RTE.	SECTION	COUNTY	TOTAL SHEETS	SHEET NO.
*	141-1HBR-3 & (9,10) R-3	OGLE	508	45
		CONTRACT NO. 64N98		
	ILLINOIS	FED. AID PROJECT		

*FAI ROUTE 39 (I-39) & FAP 567 (IL 38)

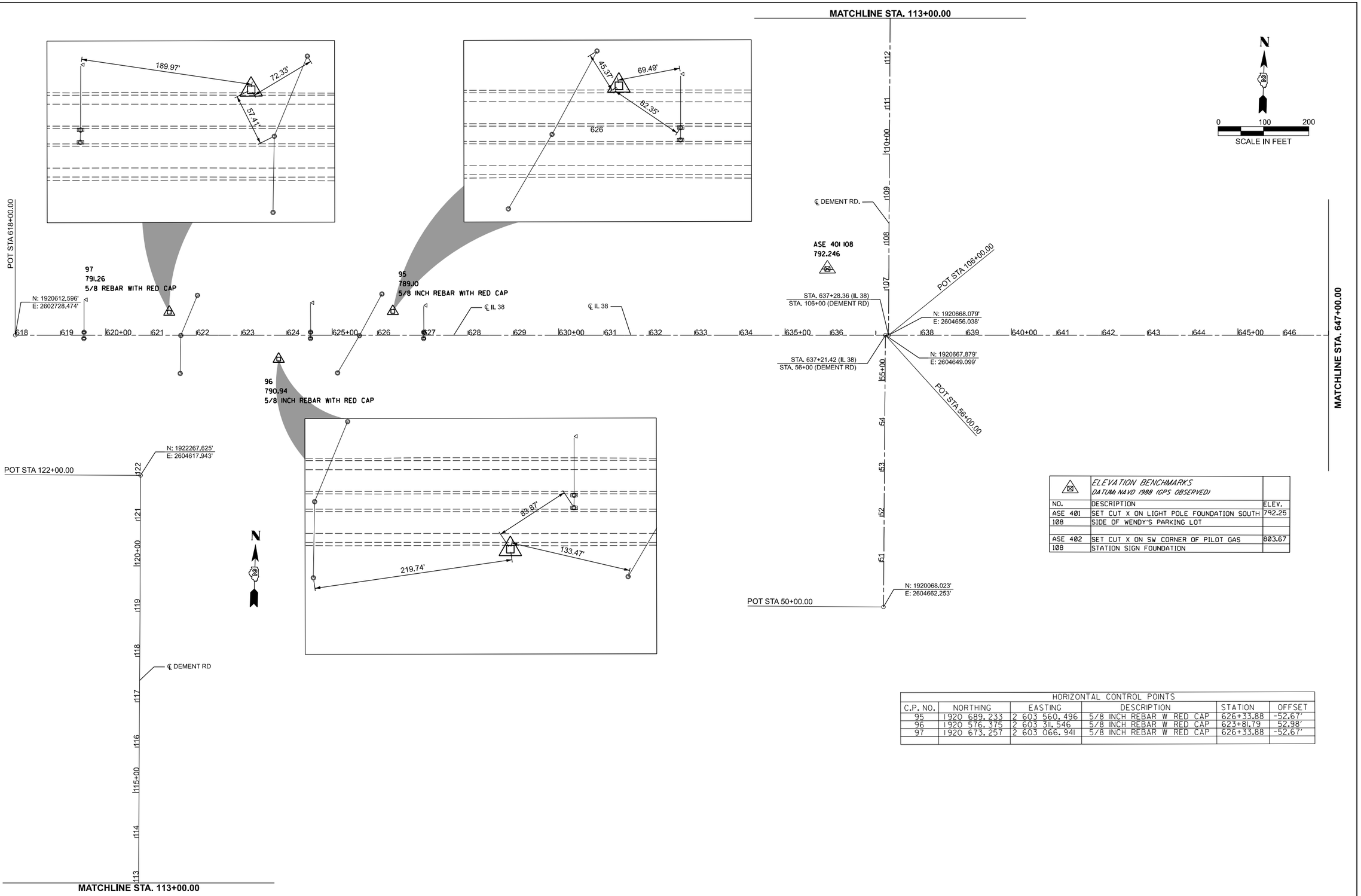

ELEVATION BENCHMARKS DATUM: NAVD 1988 (GPS OBSERVED)		
NO.	DESCRIPTION	ELEV.
ASE 401	SET CUT X ON LIGHT POLE FOUNDATION SOUTH	792.25
108	SIDE OF WENDY'S PARKING LOT	
ASE 402	SET CUT X ON SW CORNER OF PILOT GAS	803.67
108	STATION SIGN FOUNDATION	

HORIZONTAL CONTROL POINTS					
C.P. NO.	NORTHING	EASTING	DESCRIPTION	STATION	OFFSET
95	1920 689.233	2 603 560.496	5/8 INCH REBAR W RED CAP	626+33.88	-52.67'
96	1920 576.375	2 603 311.546	5/8 INCH REBAR W RED CAP	623+81.79	52.98'
97	1920 673.257	2 603 066.941	5/8 INCH REBAR W RED CAP	626+33.88	-52.67'

MODEL: PR_CL_38 - ATB 1 [Sheet]
FILE NAME: N:\DOT\220628\CAD_Sheets\Civil\D284N98-sht-ATB.dgn

CHRISTOPHER B. BURKE ENGINEERING, LTD.
8575 W. Higgins Road, Suite 600
Rosemont, Illinois 60018
(847) 823-0500

USER NAME = nhowelllindgren	DESIGNED -	REVISED -	
	DRAWN -	REVISED -	
	CHECKED -	REVISED -	
PLOT DATE = 2/6/2025	DATE -	REVISED -	

STATE OF ILLINOIS
DEPARTMENT OF TRANSPORTATION

IL 38/I-39 INTERCHANGE IMPROVEMENTS
ALIGNMENT, TIES AND BENCHMARKS

SCALE: 1"=100' | SHEET 1 OF 6 SHEETS | STA. 618+00.00 TO STA. 647+00.00

F.A.* RTE.	SECTION	COUNTY	TOTAL SHEETS	SHEET NO.
*	141-1HBR-3 & (9, 10) R-3	OGLE	508	46
		CONTRACT NO. 64N98		
		ILLINOIS FED. AID PROJECT		

*FAI ROUTE 39 (I-39) & FAP 567 (IL 38)

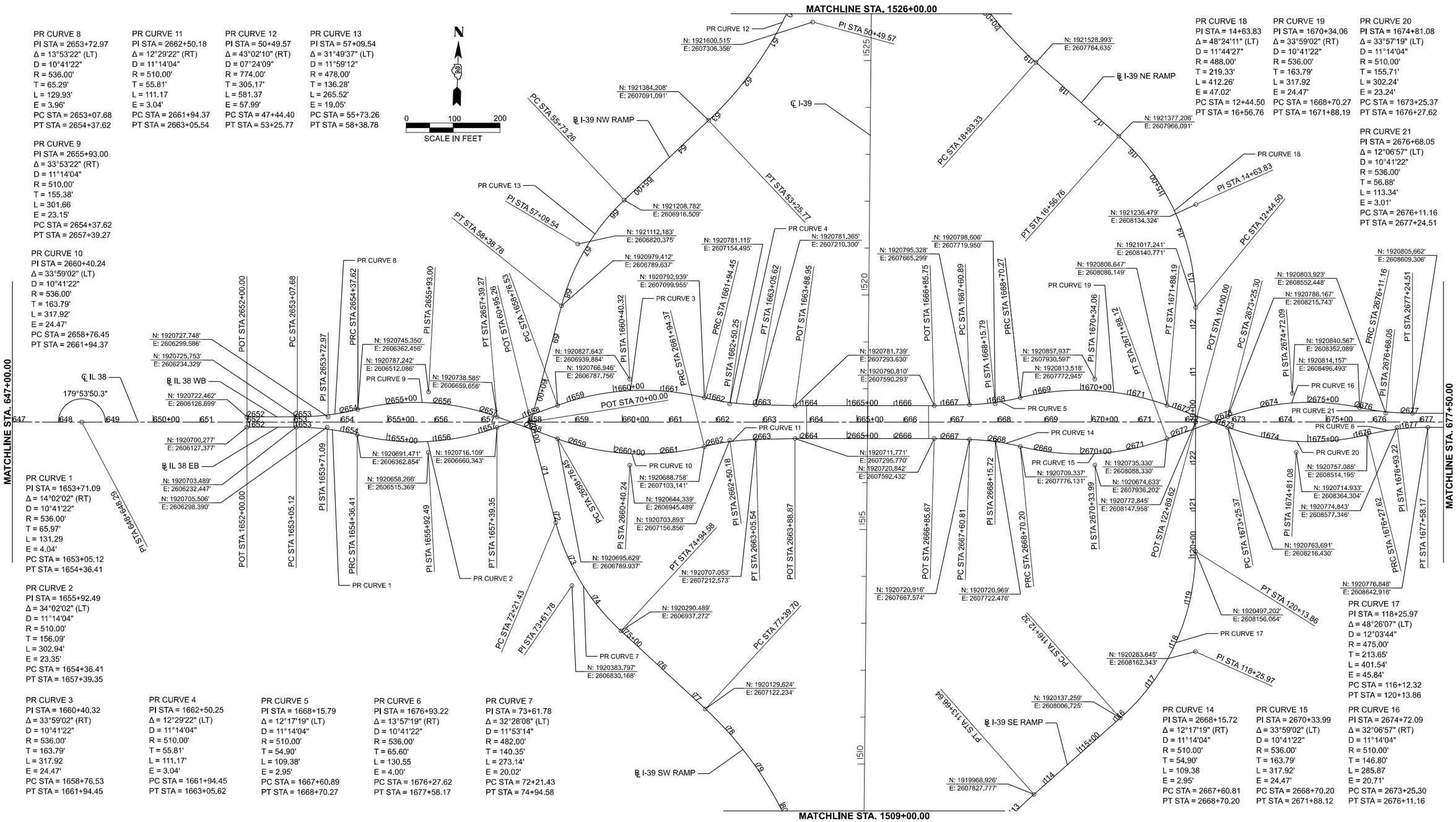

PR CURVE 8
PI STA = 2653+72.97
Δ = 13°53'22" (LT)
D = 10°41'22"
R = 536.00'
T = 65.29'
L = 129.93'
E = 3.96'
PC STA = 2653+07.68
PT STA = 2654+37.62

PR CURVE 11
PI STA = 2662+50.18
Δ = 12°29'22" (RT)
D = 11°14'04"
R = 510.00'
T = 55.81'
L = 111.17
E = 3.04'
PC STA = 2661+94.37
PT STA = 2663+05.54

PR CURVE 12
PI STA = 50+49.57
Δ = 43°02'10" (RT)
D = 07°24'09"
R = 774.00'
T = 305.17'
L = 581.37
E = 57.99'
PC STA = 47+44.40
PT STA = 53+25.77

PR CURVE 13
PI STA = 57+09.54
Δ = 31°49'37" (LT)
D = 11°59'12"
R = 478.00'
T = 136.28'
L = 265.52'
E = 19.05'
PC STA = 55+73.26
PT STA = 58+38.78

PR CURVE 9
PI STA = 2655+93.00
Δ = 33°53'22" (RT)
D = 11°14'04"
R = 510.00'
T = 155.38'
L = 301.66
E = 23.15'
PC STA = 2654+37.62
PT STA = 2657+39.27

PR CURVE 10
PI STA = 2660+40.24
Δ = 33°59'02" (LT)
D = 10°41'22"
R = 536.00'
T = 163.79'
L = 317.92'
E = 24.47'
PC STA = 2658+76.45
PT STA = 2661+94.37

PR CURVE 1
PI STA = 1653+71.09
Δ = 14°02'02" (RT)
D = 10°41'22"
R = 536.00'
T = 65.97'
L = 131.29
E = 4.04'
PC STA = 1653+05.12
PT STA = 1654+36.41

PR CURVE 2
PI STA = 1655+92.49
Δ = 34°02'02" (LT)
D = 11°14'04"
R = 510.00'
T = 156.09'
L = 302.94'
E = 23.35'
PC STA = 1654+36.41
PT STA = 1657+39.35

PR CURVE 3
PI STA = 1660+40.32
Δ = 33°59'02" (RT)
D = 10°41'22"
R = 536.00'
T = 163.79'
L = 317.92
E = 24.47'
PC STA = 1658+76.53
PT STA = 1661+94.45

PR CURVE 4
PI STA = 1662+50.25
Δ = 12°29'22" (LT)
D = 11°14'04"
R = 510.00'
T = 55.81'
L = 111.17'
E = 3.04'
PC STA = 1661+94.45
PT STA = 1663+05.62

PR CURVE 5
PI STA = 1668+15.79
Δ = 12°17'19" (LT)
D = 11°14'04"
R = 510.00'
T = 54.90'
L = 109.38'
E = 2.95'
PC STA = 1667+60.89
PT STA = 1668+70.27

PR CURVE 6
PI STA = 1676+93.22
Δ = 13°57'19" (RT)
D = 10°41'22"
R = 536.00'
T = 65.60'
L = 130.55
E = 4.00'
PC STA = 1676+27.62
PT STA = 1677+58.17

PR CURVE 7
PI STA = 73+61.78
Δ = 32°28'08" (LT)
D = 11°53'14"
R = 482.00'
T = 140.35'
L = 273.14'
E = 20.02'
PC STA = 72+21.43
PT STA = 74+94.58

PR CURVE 18
PI STA = 14+63.83
Δ = 48°24'11" (LT)
D = 11°44'27"
R = 488.00'
T = 219.33'
L = 412.26'
E = 47.02'
PC STA = 12+44.50
PT STA = 16+56.76

PR CURVE 19
PI STA = 1670+34.06
Δ = 33°59'02" (RT)
D = 10°41'22"
R = 536.00'
T = 163.79'
L = 317.92
E = 24.47'
PC STA = 1668+70.27
PT STA = 1671+88.19

PR CURVE 20
PI STA = 1674+81.08
Δ = 33°57'19" (LT)
D = 11°14'04"
R = 510.00'
T = 155.71'
L = 302.24'
E = 23.24'
PC STA = 1673+25.37
PT STA = 1676+27.62

PR CURVE 21
PI STA = 2676+68.05
Δ = 12°06'57" (LT)
D = 10°41'22"
R = 536.00'
T = 56.88'
L = 113.34'
E = 3.01'
PC STA = 2676+11.16
PT STA = 2677+24.51

PR CURVE 17
PI STA = 118+25.97
Δ = 48°26'07" (LT)
D = 12°03'44"
R = 475.00'
T = 213.65'
L = 401.54'
E = 45.84'
PC STA = 116+12.32
PT STA = 120+13.86

PR CURVE 14
PI STA = 2668+15.72
Δ = 12°17'19" (RT)
D = 11°14'04"
R = 510.00'
T = 54.90'
L = 109.38
E = 2.95'
PC STA = 2667+60.81
PT STA = 2668+70.20

PR CURVE 15
PI STA = 2670+33.99
Δ = 33°59'02" (LT)
D = 10°41'22"
R = 536.00'
T = 163.79'
L = 317.92'
E = 24.47'
PC STA = 2668+70.20
PT STA = 2671+88.12

PR CURVE 16
PI STA = 2674+72.09
Δ = 32°06'57" (RT)
D = 11°14'04"
R = 510.00'
T = 146.80'
L = 285.87
E = 20.71'
PC STA = 2673+25.30
PT STA = 2676+11.16

CHRISTOPHER B. BURKE ENGINEERING, LTD. 9575 W. Higgins Road, Suite 600 Rosemont, Illinois 60018 (847) 823-0500	USER NAME = nhowelllindgren	DESIGNED -	REVISED -	STATE OF ILLINOIS DEPARTMENT OF TRANSPORTATION	IL 38/I-39 INTERCHANGE IMPROVEMENTS ALIGNMENT, TIES AND BENCHMARKS
		DRAWN -	REVISED -		
		CHECKED -	REVISED -		
	PLOT DATE = 2/6/2025	DATE -	REVISED -		SCALE: 1"=100' SHEET 2 OF 6 SHEETS STA. 647+00.00 TO STA. 677+50.00

F.A.* RTE.	SECTION	COUNTY	TOTAL SHEETS	SHEET NO.
*	141-1HBR-3 & (9, 10) R-3	OGLE	508	47
		CONTRACT NO. 64N98		
	ILLINOIS	FED. AID PROJECT		

*FAI ROUTE 39 (I-39) & FAP 567 (IL 38)

MODEL: PR_CL_38 - ATB 3 [Sheet]
FILE NAME: N:\IDOT\220628\CAD_Sheets\Civil\D264N98-sht-ATB.dgn

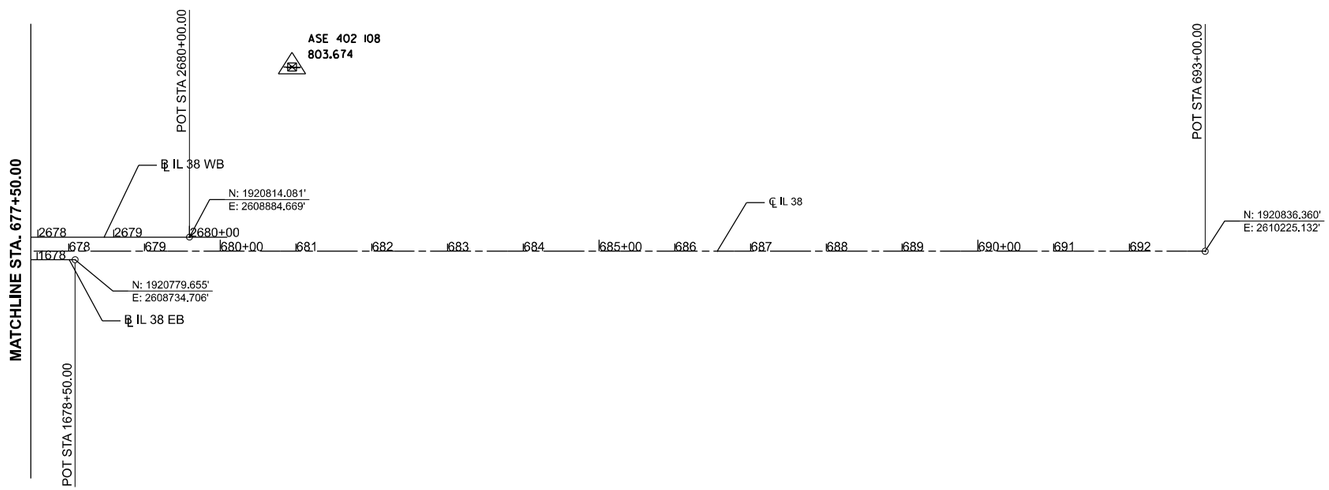

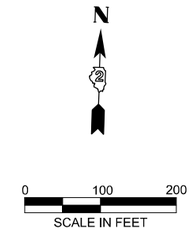

MODEL: PR_CL_38 - ATB 4 [Sheet]
FILE NAME: N:\IDOT\220628\CAD_Sheets\Civil\D264N98-sht-ATB.dgn

CHRISTOPHER B. BURKE ENGINEERING, LTD. 9575 W. Higgins Road, Suite 600 Rosemont, Illinois 60018 (847) 823-0500	USER NAME = nhowelllindgren	DESIGNED -	REVISED -	STATE OF ILLINOIS DEPARTMENT OF TRANSPORTATION	IL 38/I-39 INTERCHANGE IMPROVEMENTS ALIGNMENT, TIES AND BENCHMARKS			F.A.* RTE.	SECTION	COUNTY	TOTAL SHEETS	SHEET NO.
		DRAWN -	REVISED -					*	141-1HBR-3 & (9, 10) R-3	OGLE	508	48
		CHECKED -	REVISED -							CONTRACT NO. 64N98		
	PLOT DATE = 2/6/2025	DATE -	REVISED -		SCALE: 1"=100'	SHEET 3 OF 6 SHEETS	STA. 677+50.00 TO STA. 693+00.00		ILLINOIS FED. AID PROJECT			

*FAI ROUTE 39 (I-39) & FAP 567 (IL 38)

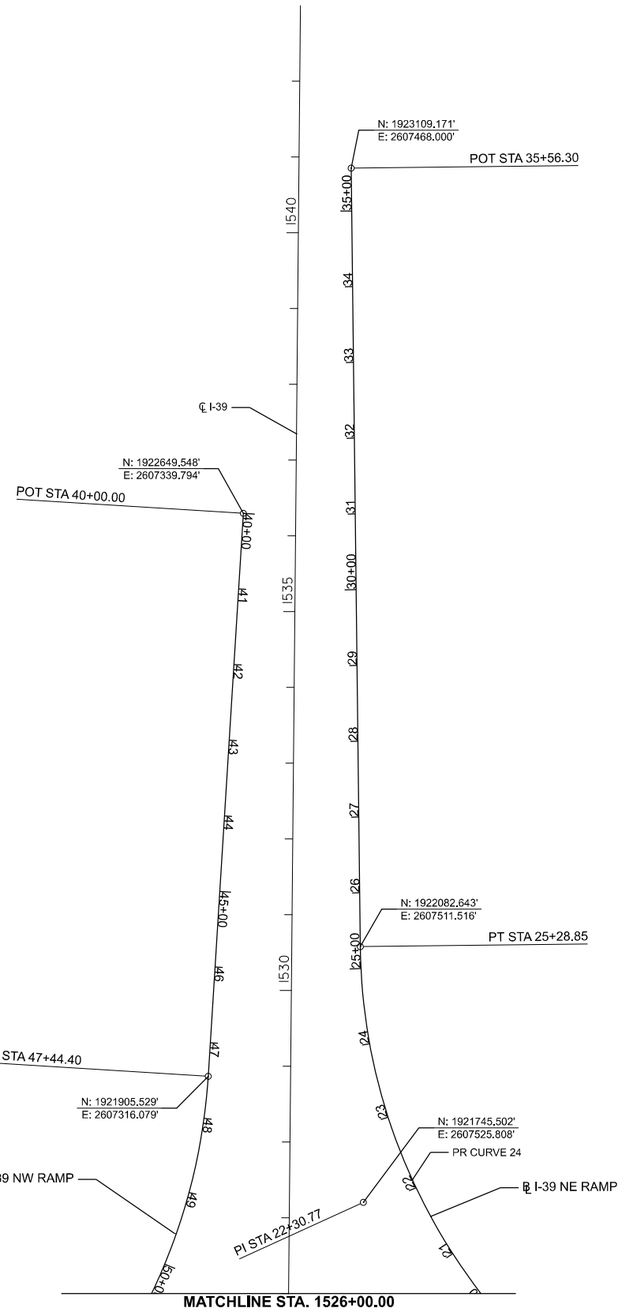

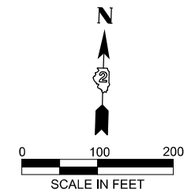

PR CURVE 22
PI STA = 80+68.08
Δ = 46°34'17" (RT)
D = 07°30'33"
R = 763.00'
T = 328.37'
L = 620.18
E = 67.66'
PC STA = 77+39.70
PT STA = 83+59.89

PR CURVE 24
PI STA = 22+30.77
Δ = 47°39'36" (RT)
D = 07°29'58"
R = 764.00'
T = 337.44'
L = 635.52
E = 71.20'
PC STA = 18+93.33
PT STA = 25+28.85

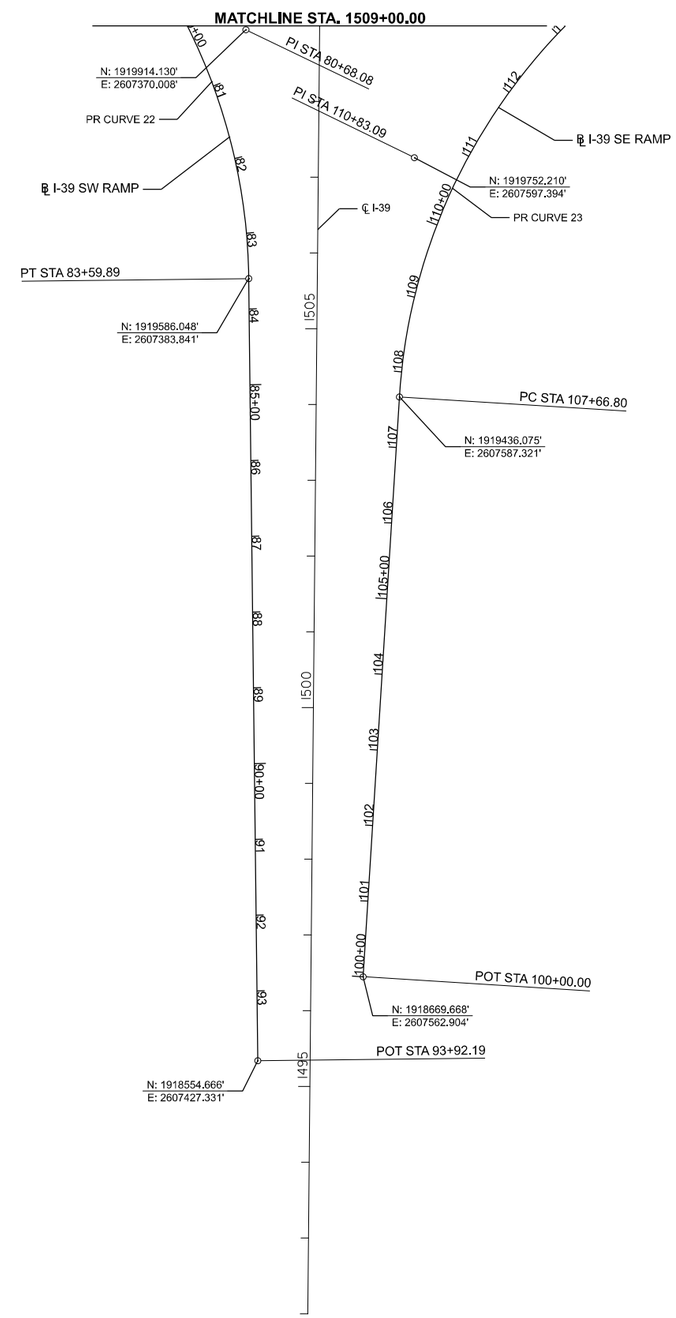

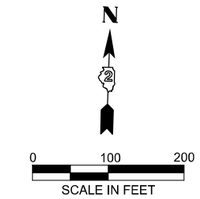

PR CURVE 23
PI STA = 110+83.09
Δ = 44°55'34" (RT)
D = 07°29'23"
R = 765.00'
T = 316.30'
L = 599.84
E = 62.81'
PC STA = 107+66.80
PT STA = 113+66.64

MODEL: PR_CL_38 - ATB 5 [Sheet]
FILE NAME: N:\IDOT\220628\CAD_Sheets\Civil\D2640N99-sht-ATB.dgn

CHRISTOPHER B. BURKE ENGINEERING, LTD.
9575 W. Higgins Road, Suite 600
Rosemont, Illinois 60018
(847) 823-0500

USER NAME = nhowelllindgren	DESIGNED -	REVISED -	
	DRAWN -	REVISED -	
	CHECKED -	REVISED -	
PLOT DATE = 2/5/2025	DATE -	REVISED -	

STATE OF ILLINOIS
DEPARTMENT OF TRANSPORTATION

IL 38/I-39 INTERCHANGE IMPROVEMENTS
ALIGNMENT, TIES AND BENCHMARKS

SCALE: 1"=100' | SHEET 4 OF 6 SHEETS | STA. TO STA.

F.A.* RTE.	SECTION	COUNTY	TOTAL SHEETS	SHEET NO.
*	141-1HBR-3 & (9, 10) R-3	OGLE	508	49

CONTRACT NO. 64N98

ILLINOIS | FED. AID PROJECT

*FAI ROUTE 39 (I-39) & FAP 567 (IL 38)

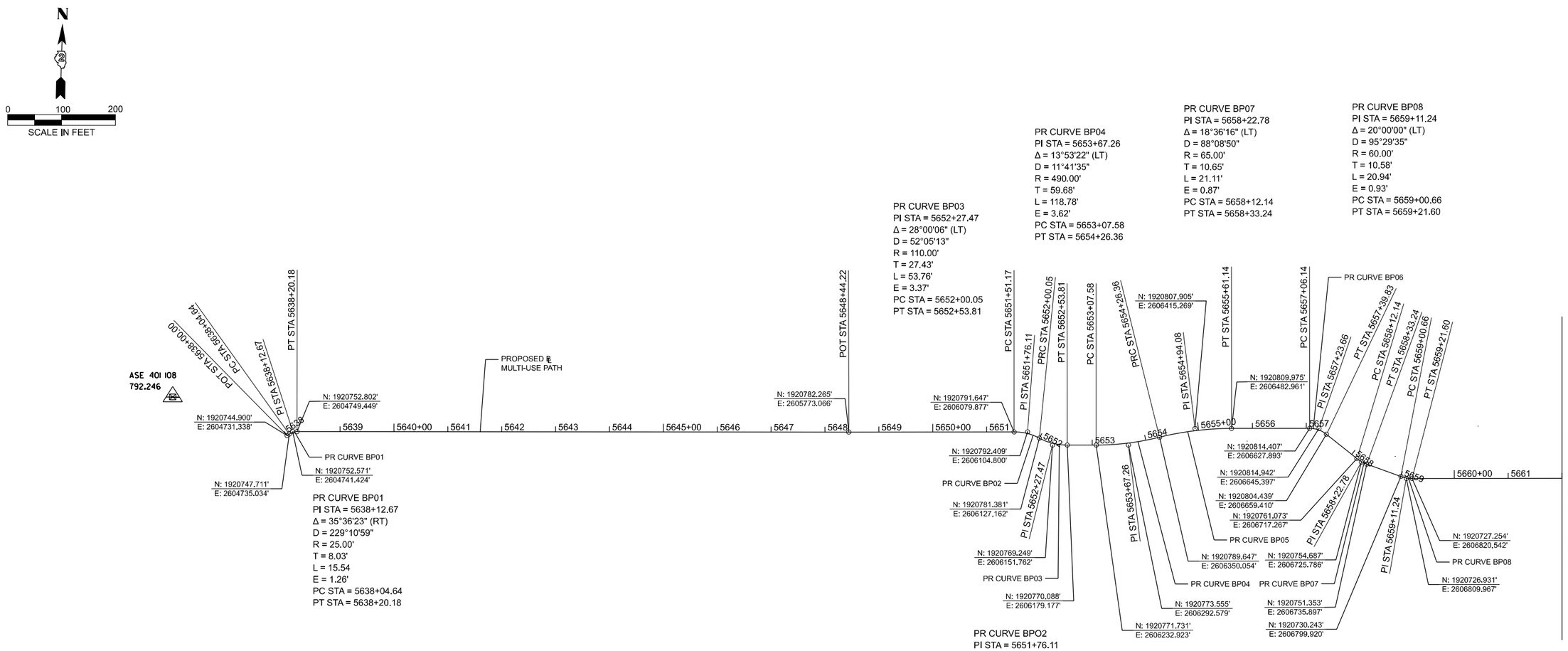

PR CURVE BP01
PI STA = 5638+12.67
Δ = 35°36'23" (RT)
D = 229°10'59"
R = 25.00'
T = 8.03'
L = 15.54
E = 1.26'
PC STA = 5638+04.64
PT STA = 5638+20.18

PR CURVE BP02
PI STA = 5651+76.11
Δ = 28°00'06" (RT)
D = 57°17'45"
R = 100.00'
T = 24.93'
L = 48.87
E = 3.06'
PC STA = 5651+51.17
PT STA = 5652+00.05

PR CURVE BP03
PI STA = 5652+27.47
Δ = 28°00'06" (LT)
D = 52°05'13"
R = 110.00'
T = 27.43'
L = 53.76'
E = 3.37'
PC STA = 5652+00.05
PT STA = 5652+53.81

PR CURVE BP04
PI STA = 5653+67.26
Δ = 13°53'22" (LT)
D = 11°41'35"
R = 490.00'
T = 59.68'
L = 118.78'
E = 3.62'
PC STA = 5653+07.58
PT STA = 5654+26.36

PR CURVE BP05
PI STA = 5654+94.08
Δ = 13°53'22" (RT)
D = 10°18'18"
R = 556.00'
T = 67.72'
L = 134.78
E = 4.11'
PC STA = 5654+26.36
PT STA = 5655+61.14

PR CURVE BP06
PI STA = 5657+23.66
Δ = 38°36'16" (RT)
D = 114°35'30"
R = 50.00'
T = 17.51'
L = 33.69
E = 2.98'
PC STA = 5657+06.14
PT STA = 5657+39.83

PR CURVE BP07
PI STA = 5658+22.78
Δ = 18°36'16" (LT)
D = 88°08'50"
R = 65.00'
T = 10.65'
L = 21.11'
E = 0.87'
PC STA = 5658+12.14
PT STA = 5658+33.24

PR CURVE BP08
PI STA = 5659+11.24
Δ = 20°00'00" (LT)
D = 95°29'35"
R = 60.00'
T = 10.58'
L = 20.94'
E = 0.93'
PC STA = 5659+00.66
PT STA = 5659+21.60

MODEL: Unnamed Plan - Plan 2 [Sheet]
FILE NAME: N:\IDOT\220628\CAD_Sheets\Civil\D264N98-sht-ATB.dgn

CHRISTOPHER B. BURKE ENGINEERING, LTD.
9575 W. Higgins Road, Suite 600
Rosemont, Illinois 60018
(847) 823-0500

USER NAME = nhowelllindgren	DESIGNED -	REVISED -	
	DRAWN -	REVISED -	
	CHECKED -	REVISED -	
PLOT DATE = 2/6/2025	DATE -	REVISED -	

STATE OF ILLINOIS
DEPARTMENT OF TRANSPORTATION

IL 38/I-39 INTERCHANGE IMPROVEMENTS
ALIGNMENT, TIES AND BENCHMARKS - MULTI-USE PATH

SCALE: 1"=100' | SHEET 5 OF 6 SHEETS | STA. 5368+00.00 TO STA. 5662+00.00

F.A.* RTE.	SECTION	COUNTY	TOTAL SHEETS	SHEET NO.
*	141-1HBR-3 & (9, 10) R-3	OGLE	508	50
		CONTRACT NO. 64N98		
		ILLINOIS	FED. AID PROJECT	

*FAI ROUTE 39 (I-39) & FAP 567 (IL 38)

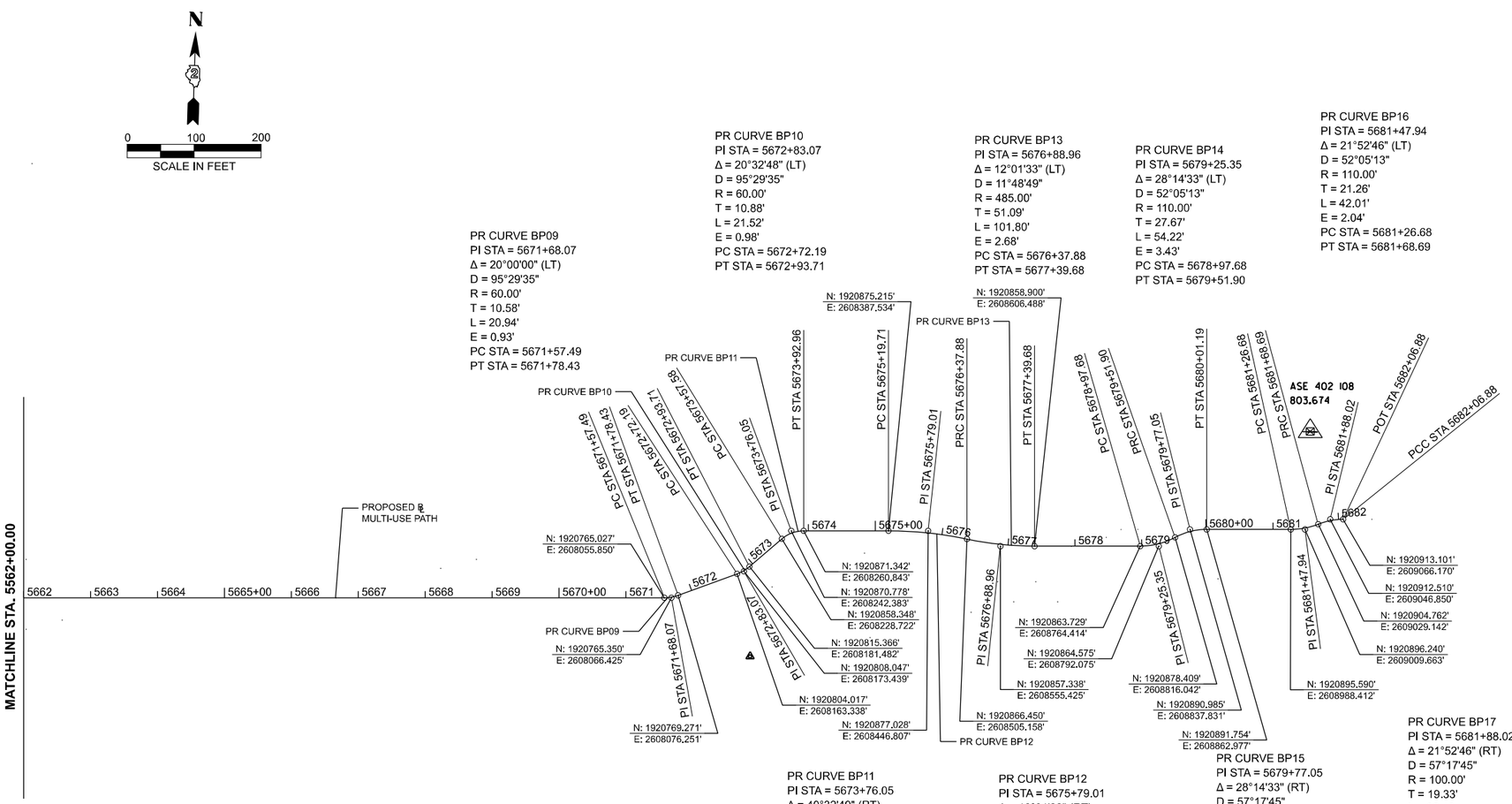

PR CURVE BP09
PI STA = 5671+68.07
Δ = 20°00'00" (LT)
D = 95°29'35"
R = 60.00'
T = 10.58'
L = 20.94'
E = 0.93'
PC STA = 5671+57.49
PT STA = 5671+78.43

PR CURVE BP10
PI STA = 5672+83.07
Δ = 20°32'48" (LT)
D = 95°29'35"
R = 60.00'
T = 10.88'
L = 21.52'
E = 0.98'
PC STA = 5672+72.19
PT STA = 5672+93.71

PR CURVE BP11
PI STA = 5673+76.05
Δ = 40°32'49" (RT)
D = 114°35'30"
R = 50.00'
T = 18.47'
L = 35.38
E = 3.30'
PC STA = 5673+57.58
PT STA = 5673+92.96

PR CURVE BP12
PI STA = 5675+79.01
Δ = 12°01'33" (RT)
D = 10°10'37"
R = 563.00'
T = 59.30'
L = 118.17
E = 3.11'
PC STA = 5675+19.71
PT STA = 5676+37.88

PR CURVE BP13
PI STA = 5676+88.96
Δ = 12°01'33" (LT)
D = 11°48'49"
R = 485.00'
T = 51.09'
L = 101.80'
E = 2.68'
PC STA = 5676+37.88
PT STA = 5677+39.68

PR CURVE BP14
PI STA = 5679+25.35
Δ = 28°14'33" (LT)
D = 52°05'13"
R = 110.00'
T = 27.67'
L = 54.22'
E = 3.43'
PC STA = 5678+97.68
PT STA = 5679+51.90

PR CURVE BP15
PI STA = 5679+77.05
Δ = 28°14'33" (RT)
D = 57°17'45"
R = 100.00'
T = 25.16'
L = 49.29
E = 3.12'
PC STA = 5679+51.90
PT STA = 5680+01.19

PR CURVE BP16
PI STA = 5681+47.94
Δ = 21°52'46" (LT)
D = 52°05'13"
R = 110.00'
T = 21.26'
L = 42.01'
E = 2.04'
PC STA = 5681+26.68
PT STA = 5681+68.69

PR CURVE BP17
PI STA = 5681+88.02
Δ = 21°52'46" (RT)
D = 57°17'45"
R = 100.00'
T = 19.33'
L = 38.19
E = 1.85'
PC STA = 5681+68.69
PT STA = 5682+06.88

MODEL: Unnamed Plan-1 - Plan 3 [Sheet]
FILE NAME: N:\IDOT\220628\CAD_Sheets\Civil\D2640N98-sht-ATB.dgn

CHRISTOPHER B. BURKE ENGINEERING, LTD.
9575 W. Higgins Road, Suite 600
Rosemont, Illinois 60018
(847) 823-0500

USER NAME = nhowelllindgren	DESIGNED -	REVISED -	
	DRAWN -	REVISED -	
	CHECKED -	REVISED -	
PLOT DATE = 2/6/2025	DATE -	REVISED -	

STATE OF ILLINOIS
DEPARTMENT OF TRANSPORTATION

IL 38/I-39 INTERCHANGE IMPROVEMENTS
ALIGNMENT, TIES AND BENCHMARKS - MULTI-USE PATH

SCALE: 1"=100' | SHEET 6 OF 6 SHEETS | STA. 5662+00.00 TO STA. 5682+50.00

F.A.* RTE.	SECTION	COUNTY	TOTAL SHEETS	SHEET NO.
*	141-1HBR-3 & (9, 10) R-3	OGLE	508	51
		CONTRACT NO. 64N98		
		ILLINOIS	FED. AID PROJECT	

*FAI ROUTE 39 (I-39) & FAP 567 (IL 38)

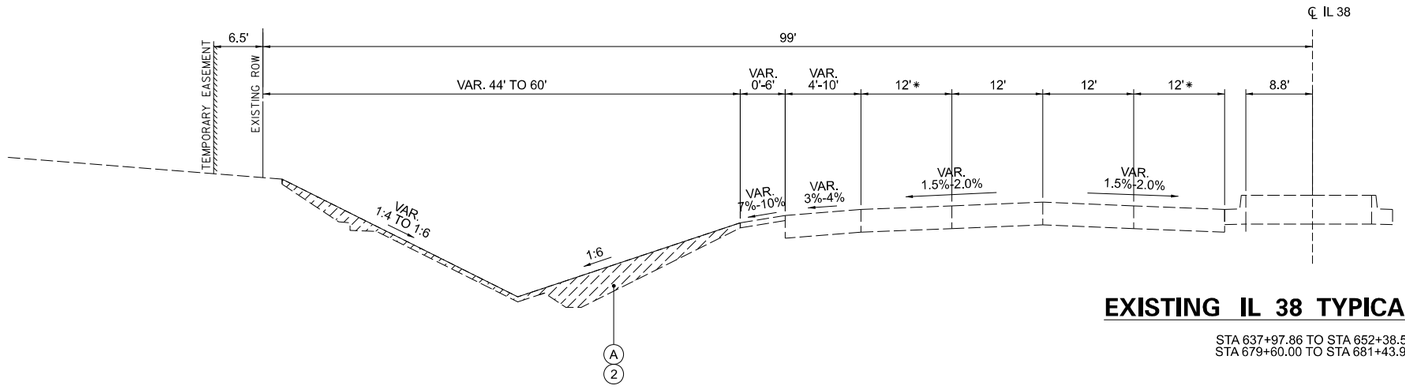

EXISTING IL 38 TYPICAL SECTION

STA 637+97.86 TO STA 652+38.51
STA 679+60.00 TO STA 681+43.93

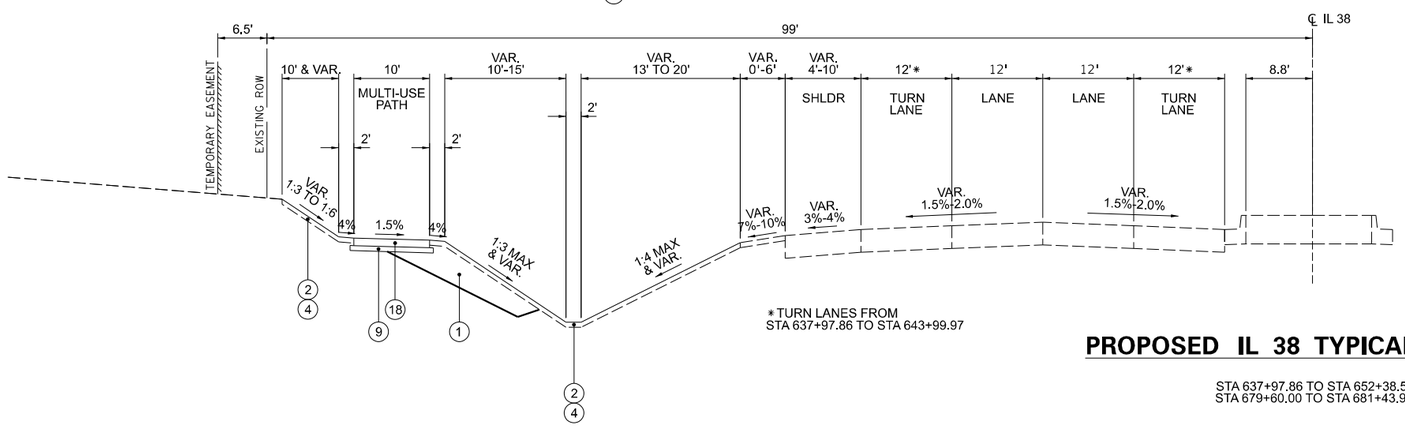

* TURN LANES FROM
STA 637+97.86 TO STA 643+99.97

PROPOSED IL 38 TYPICAL SECTION

STA 637+97.86 TO STA 652+38.51
STA 679+60.00 TO STA 681+43.93

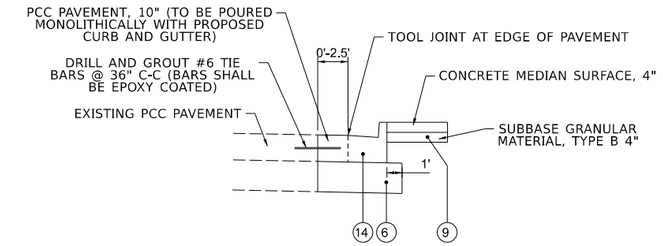

PCC PAVEMENT WIDENING DETAIL

STA 631+39.51 TO STA 633+49.51
STA 641+75.96 TO STA 643+97.29

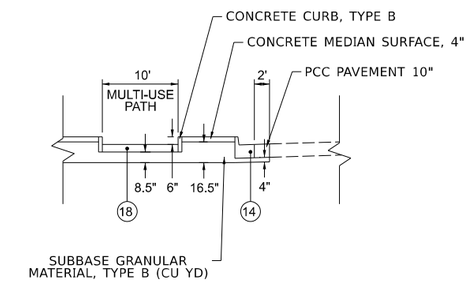

MEDIAN ISLAND DETAIL

AT IL 38/DEMENT ROAD

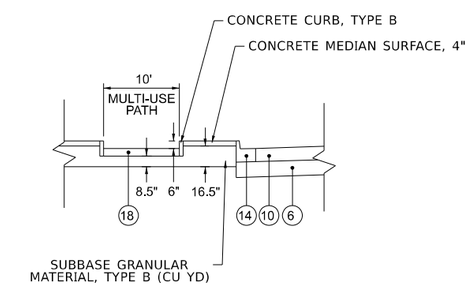

MEDIAN ISLAND DETAIL

AT DDI CROSSOVER

HOT–MIX ASPHALT TABLE (IDOT)

LOCATION AND MIXTURE USE(S):	STABILIZED SUBBASE	TEMPORARY PAVEMENT & CLASS D PATCHES	IL 38 RESURFACING
THICKNESS:	4"	9"	2 ½"
PG:	PG 64-22	PG 64-22	PG 64-22
DESIGN AIR VOIDS:	4.0% @ N50	4.0% @ N70	4.0% @ N70
MIXTURE COMPOSITION:	IL-9.5, 9.5FG or 19.0	IL-19.0	IL-19.0
FRICTION AGGREGATE:	N/A	N/A	N/A
MIXTURE WEIGHT:	112 LBS/SY/IN	112 LBS/SY/IN	112 LBS/SY/IN
QUALITY MANAGEMENT PROGRAM:	QC/QA	QC/QA	QC/QA
SUBLOT SIZE:	N/A	N/A	N/A
MATERIAL TRANSFER DEVICE	NO	NO	NO

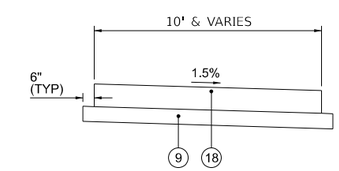

PCC SIDEWALK DETAIL

LEGEND

- REMOVAL ITEMS
- (A) EARTH EXCAVATION (20200100)
- (B) REMOVAL AND DISPOSAL OF UNSUITABLE MATERIAL (20201200)
- (C) PAVEMENT REMOVAL (44000100)
- (D) COMBINATION CURB AND GUTTER REMOVAL (44000500)
- (E) PAVED SHOULDER REMOVAL (44004250)
- (F) AGGREGATE SHOULDER REMOVAL (PAID FOR AS EARTH EXCAVATION)
- (G) MEDIAN REMOVAL (44003100)
- (1) FURNISHED EXCAVATION (20400800)
- (2) TOPSOIL EXCAVATION AND PLACEMENT (21101505)
- (3) TOPSOIL FURNISH AND PLACE, 4" (21101615)
- (4) SEEDING (SEE EROSION CONTROL PLANS FOR SEEDING TYPE)
- (5) AGGREGATE SUBGRADE IMPROVEMENT (30300001)
- (6) AGGREGATE SUBGRADE IMPROVEMENT 12" (30300112)
- (7) AGGREGATE SUBGRADE IMPROVEMENT 18" (30300118)
- (8) STABILIZED SUBBASE - HOT-MIX ASPHALT, 4" (31200500)
- (9) SUBBASE GRANULAR MATERIAL, TYPE B 4" (31101200)
- (10) PORTLAND CEMENT CONCRETE PAVEMENT 10 ½" (JOINTED) (42000511)
- (11) AGGREGATE SHOULDERS, TYPE A (48100200)
- (12) PORTLAND CEMENT CONCRETE SHOULDERS 10 ½" (48300510)
- (13) PIPE UNDERDRAINS, TYPE 2, 6" (60108206)
- (14) COMBINATION CONCRETE CURB AND GUTTER, TYPE B-6.24 (60605000)
- (15) CONCRETE BARRIER WALL (SPECIAL) (X6370050)
- (16) CONCRETE BARRIER BASE (SPECIAL) (X6370048)
- (17) SHOULDER RUMBLE STRIPS, 16 INCH (64200116)
- (18) PORTLAND CEMENT CONCRETE SIDEWALK, 6" (42400300)
- (19) SUBBASE GRANULAR MATERIAL, TYPE B 6" (31101400)
- (20) SUBBASE GRANULAR MATERIAL, TYPE B 8" (31101600)

CHRISTOPHER B. BURKE ENGINEERING, LTD.
9575 W. Higgins Road, Suite 600
Rosemont, Illinois 60018
(847) 823-0500

USER NAME = nhowelllindgren	DESIGNED -	REVISED -	
	DRAWN -	REVISED -	
	CHECKED -	REVISED -	
PLOT DATE = 2/5/2025	DATE -	REVISED -	

STATE OF ILLINOIS
DEPARTMENT OF TRANSPORTATION

IL 38/I-39 INTERCHANGE IMPROVEMENTS
TYPICAL SECTIONS

SCALE: 1"=10' | SHEET 1 OF 5 SHEETS | STA. | TO STA.

F.A.* RTE.	SECTION	COUNTY	TOTAL SHEETS	SHEET NO.
*	141-1HBR-3 & (9, 10) R-3	OGLE	508	52
		CONTRACT NO. 64N98		
	ILLINOIS	FED. AID PROJECT		

*FAI ROUTE 39 (I-39) & FAP 567 (IL 38)

MODEL: Typical - Typ 1 [Sheet]
FILE NAME: N:\IDOT\220628\CAD_Sheets\Civil\D264N98-sht-typical.dgn

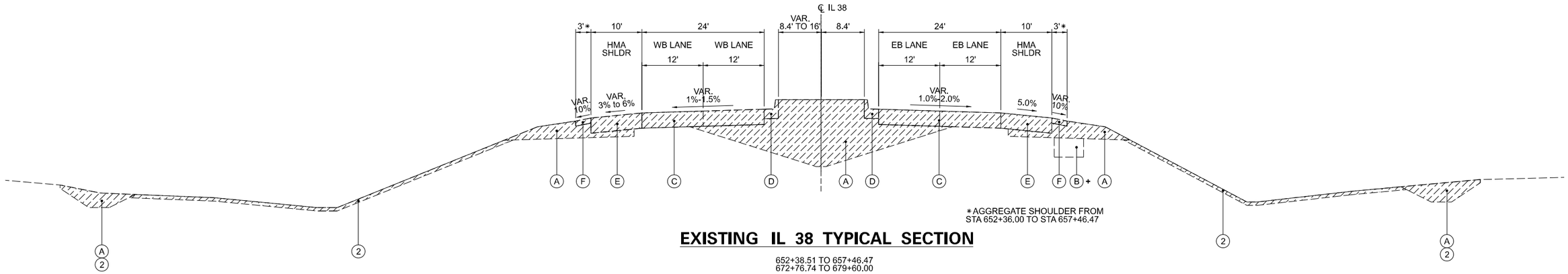

* AGGREGATE SHOULDER FROM STA 652+36.00 TO STA 657+46.47

EXISTING IL 38 TYPICAL SECTION

652+38.51 TO 657+46.47
672+76.74 TO 679+60.00

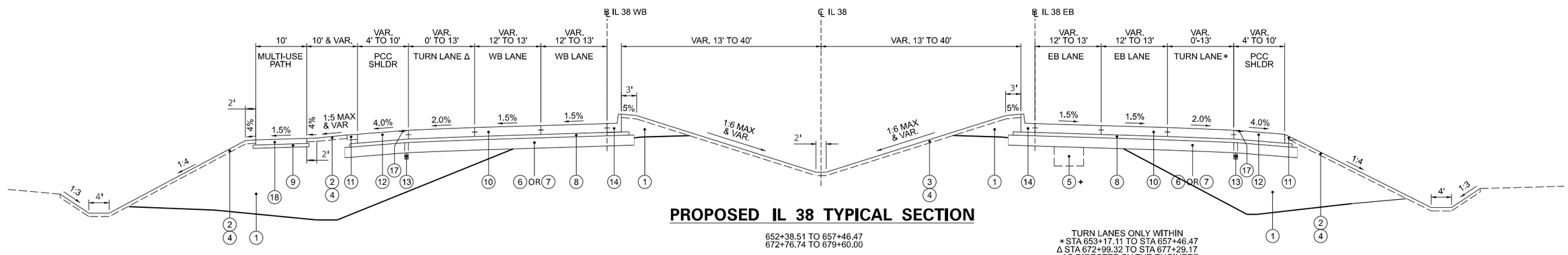

PROPOSED IL 38 TYPICAL SECTION

652+38.51 TO 657+46.47
672+76.74 TO 679+60.00

TURN LANES ONLY WITHIN
* STA 653+17.11 TO STA 657+46.47
Δ STA 672+99.32 TO STA 677+29.17
+ AS DIRECTED BY THE ENGINEER

NOTE: AGGREGATE SUBGRADE IMPROVEMENT 18" TO BE PLACED FROM STA. 652+35.64 TO STA. 663+86.47

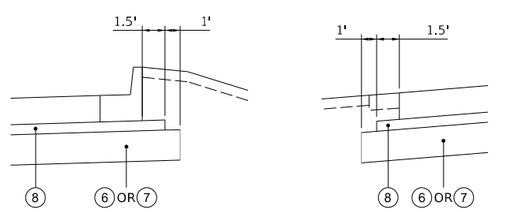

ADJACENT TO CURB & GUTTER

ADJACENT TO SHOULDER

TYPICAL SUBGRADE DETAIL

LEGEND

- REMOVAL ITEMS
- (A) EARTH EXCAVATION (20200100)
- (B) REMOVAL AND DISPOSAL OF UNSUITABLE MATERIAL (20201200)
- (C) PAVEMENT REMOVAL (44000100)
- (D) COMBINATION CURB AND GUTTER REMOVAL (44000500)
- (E) PAVED SHOULDER REMOVAL (44004250)
- (F) AGGREGATE SHOULDER REMOVAL (PAID FOR AS EARTH EXCAVATION)
- (G) MEDIAN REMOVAL (44003100)

- (1) FURNISHED EXCAVATION (20400800)
- (2) TOPSOIL EXCAVATION AND PLACEMENT (21101505)
- (3) TOPSOIL FURNISH AND PLACE, 4" (21101615)
- (4) SEEDING (SEE EROSION CONTROL PLANS FOR SEEDING TYPE)
- (5) AGGREGATE SUBGRADE IMPROVEMENT (30300001)
- (6) AGGREGATE SUBGRADE IMPROVEMENT 12" (30300112)
- (7) AGGREGATE SUBGRADE IMPROVEMENT 18" (30300118)
- (8) STABILIZED SUBBASE - HOT-MIX ASPHALT, 4" (31200500)
- (9) SUBBASE GRANULAR MATERIAL, TYPE B 4" (31101200)
- (10) PORTLAND CEMENT CONCRETE PAVEMENT 10 ½" (JOINTED) (42000511)

- (11) AGGREGATE SHOULDERS, TYPE A (48100200)
- (12) PORTLAND CEMENT CONCRETE SHOULDERS 10 ½" (48300510)
- (13) PIPE UNDERDRAINS, TYPE 2, 6" (60108206)
- (14) COMBINATION CONCRETE CURB AND GUTTER, TYPE B-6.24 (60605000)
- (15) CONCRETE BARRIER WALL (SPECIAL) (X6370050)
- (16) CONCRETE BARRIER BASE (SPECIAL) (X6370048)
- (17) SHOULDER RUMBLE STRIPS, 16 INCH (64200116)
- (18) PORTLAND CEMENT CONCRETE SIDEWALK, 6" (42400300)
- (19) SUBBASE GRANULAR MATERIAL, TYPE B 6" (31101400)
- (20) SUBBASE GRANULAR MATERIAL, TYPE B 8" (31101600)

MODEL: Typical - Typ 2 [Sheet]
FILE NAME: N:\IDOT\220628\CAD_Sheets\Civil\D284N98-sht-typical.dgn

CHRISTOPHER B. BURKE ENGINEERING, LTD.
8575 W. Higgins Road, Suite 600
Rosemont, Illinois 60018
(847) 823-0500

USER NAME = nhowelllindgren	DESIGNED -	REVISED -	
	DRAWN -	REVISED -	
	CHECKED -	REVISED -	
PLOT DATE = 2/6/2025	DATE -	REVISED -	

STATE OF ILLINOIS
DEPARTMENT OF TRANSPORTATION

IL 38/I-39 INTERCHANGE IMPROVEMENTS
TYPICAL SECTIONS

SCALE: 1"=10' | SHEET 2 OF 5 SHEETS | STA. TO STA.

F.A.* RTE.	SECTION	COUNTY	TOTAL SHEETS	SHEET NO.
*	141-1HBR-3 & (9, 10) R-3	OGLE	508	53
		CONTRACT NO. 64N98		
	ILLINOIS	FED. AID PROJECT		

*FAI ROUTE 39 (I-39) & FAP 567 (IL 38)

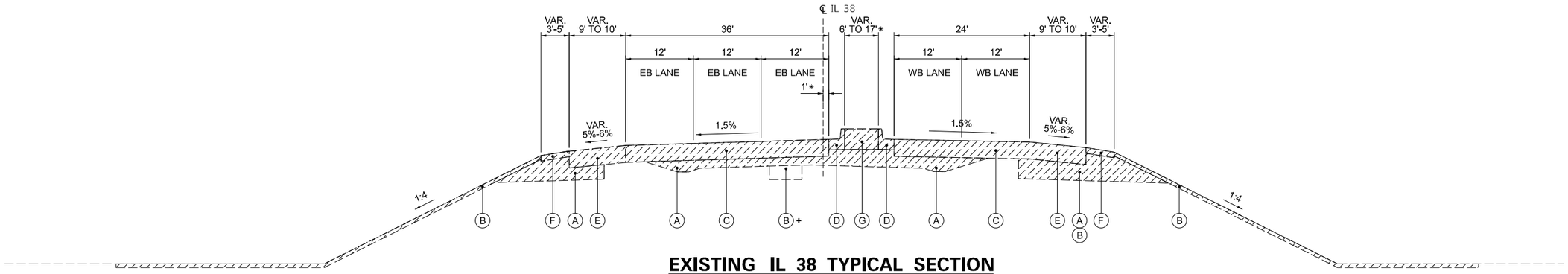

EXISTING IL 38 TYPICAL SECTION

658+52.31 TO 663+86.47
666+59.47 TO 671+70.90

*MEDIAN TAPERS TO ACCOMODATE LEFT TURN LANE
STA. 658+52.31 TO STA. 662+93.15
& STA. 667+52.80 TO STA 671+70.90

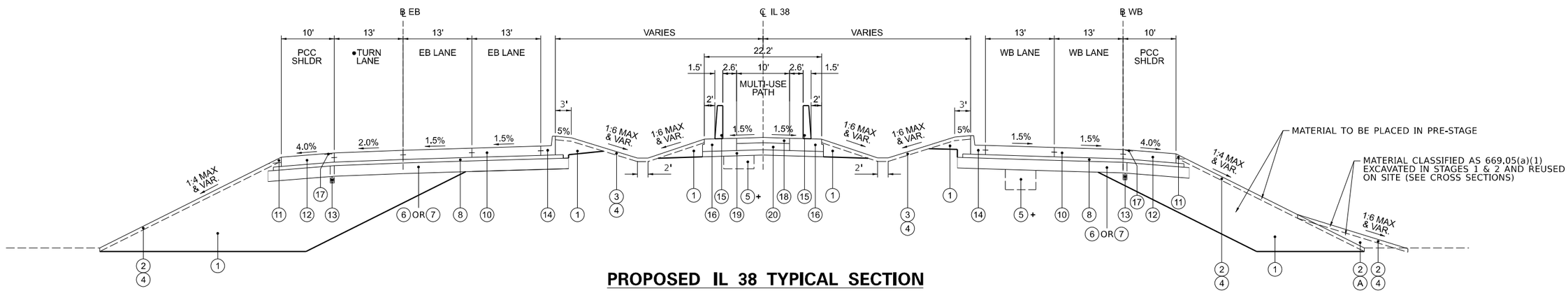

PROPOSED IL 38 TYPICAL SECTION

658+52.31 TO 663+86.47
666+59.47 TO 671+70.90

NOTE: AGGREGATE SUBGRADE IMPROVEMENT 18" TO BE PLACED FROM STA. 652+35.64 TO STA. 663+86.47

BARRIERS FROM 661+72.97 TO 663+92.97
& 666+52.97 TO 668+52.97

•667+02.55 TO 671+41.34

+ AS DIRECTED BY THE ENGINEER

LEGEND

- REMOVAL ITEMS
- (A) EARTH EXCAVATION (20200100)
- (B) REMOVAL AND DISPOSAL OF UNSUITABLE MATERIAL (20201200)
- (C) PAVEMENT REMOVAL (44000100)
- (D) COMBINATION CURB AND GUTTER REMOVAL (44000500)
- (E) PAVED SHOULDER REMOVAL (44004250)
- (F) AGGREGATE SHOULDER REMOVAL (PAID FOR AS EARTH EXCAVATION)
- (G) MEDIAN REMOVAL (44003100)
- (1) FURNISHED EXCAVATION (20400800)
- (2) TOPSOIL EXCAVATION AND PLACEMENT (21101505)
- (3) TOPSOIL FURNISH AND PLACE, 4" (21101615)
- (4) SEEDING (SEE EROSION CONTROL PLANS FOR SEEDING TYPE)
- (5) AGGREGATE SUBGRADE IMPROVEMENT (30300001)
- (6) AGGREGATE SUBGRADE IMPROVEMENT 12" (30300112)
- (7) AGGREGATE SUBGRADE IMPROVEMENT 18" (30300118)
- (8) STABILIZED SUBBASE - HOT-MIX ASPHALT, 4" (31200500)
- (9) SUBBASE GRANULAR MATERIAL, TYPE B 4" (31101200)
- (10) PORTLAND CEMENT CONCRETE PAVEMENT 10 ½" (JOINTED) (42000511)
- (11) AGGREGATE SHOULDERS, TYPE A (48100200)
- (12) PORTLAND CEMENT CONCRETE SHOULDERS 10 ½" (48300510)
- (13) PIPE UNDERDRAINS, TYPE 2, 6" (60108206)
- (14) COMBINATION CONCRETE CURB AND GUTTER, TYPE B-6.24 (60605000)
- (15) CONCRETE BARRIER WALL (SPECIAL) (X6370050)
- (16) CONCRETE BARRIER BASE (SPECIAL) (X6370048)
- (17) SHOULDER RUMBLE STRIPS, 16 INCH (64200116)
- (18) PORTLAND CEMENT CONCRETE SIDEWALK, 6" (42400300)
- (19) SUBBASE GRANULAR MATERIAL, TYPE B 6" (31101400)
- (20) SUBBASE GRANULAR MATERIAL, TYPE B 8" (31101600)

MODEL: Typical - Typ 3 [Sheet]
FILE NAME: N:\IDOT\220628\CAD_Sheets\Civil\D264N98-sht-typical.dgn

CHRISTOPHER B. BURKE ENGINEERING, LTD.
9575 W. Higgins Road, Suite 600
Rosemont, Illinois 60018
(847) 823-0500

USER NAME = nhowelllindgren	DESIGNED -	REVISED -	
	DRAWN -	REVISED -	
	CHECKED -	REVISED -	
PLOT DATE = 2/6/2025	DATE -	REVISED -	

STATE OF ILLINOIS
DEPARTMENT OF TRANSPORTATION

IL 38/I-39 INTERCHANGE IMPROVEMENTS
TYPICAL SECTIONS

SCALE: 1"=10' | SHEET 3 OF 5 SHEETS | STA. | TO STA.

F.A.* RTE.	SECTION	COUNTY	TOTAL SHEETS	SHEET NO.
*	141-1HBR-3 & (9, 10) R-3	OGLE	508	54
		CONTRACT NO. 64N98		
	ILLINOIS	FED. AID PROJECT		

*FAI ROUTE 39 (I-39) & FAP 567 (IL 38)

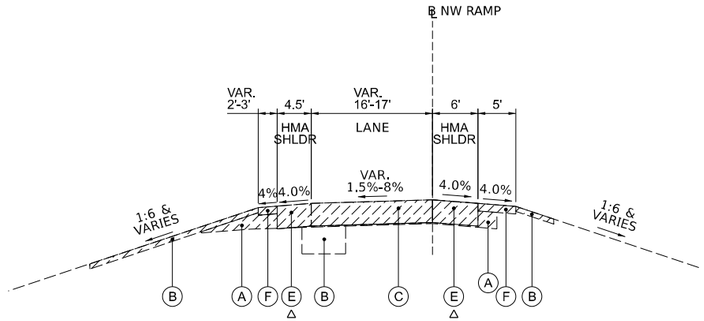

EXISTING I–39 NW RAMP TYPICAL SECTION

STA 55+14.50 TO STA 60+05.21

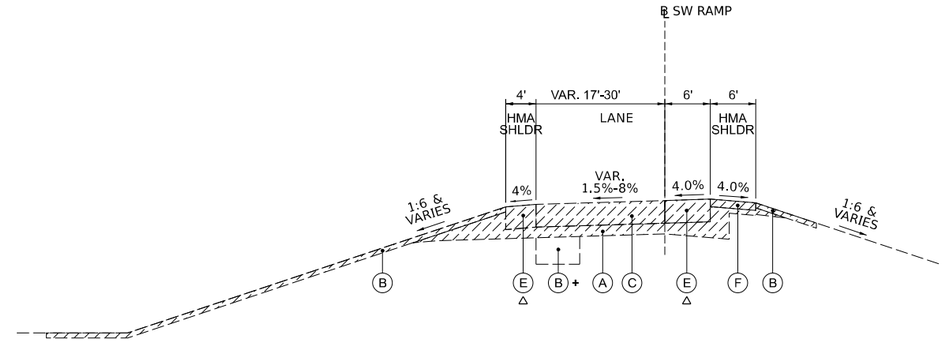

EXISTING I–39 SW RAMP TYPICAL SECTION

STA. 70+91.21 TO STA 77+39.70

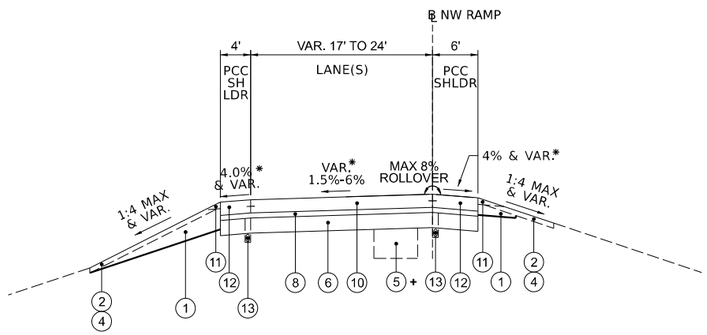

PROPOSED I–39 NW RAMP TYPICAL SECTION

STA 55+14.50 TO STA 60+05.21

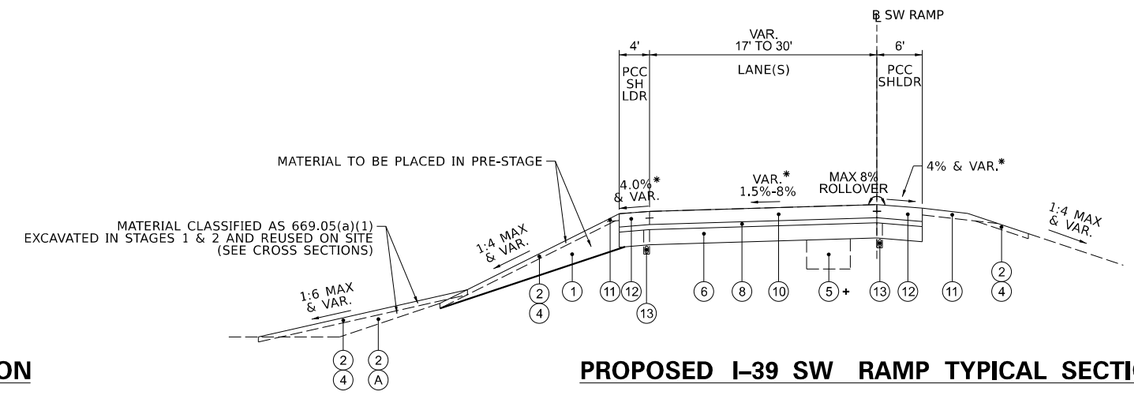

PROPOSED I–39 SW RAMP TYPICAL SECTION

STA. 70+91.21 TO STA 77+39.70

*SEE SUPERELEVATION DETAILS FOR CROSS SLOPE TRANSITIONS

+ AS DIRECTED BY THE ENGINEER

△ RAMP PAVEMENT AND SHOULDERS TO BE REMOVED IN STAGES AS PER MAINTENANCE OF TRAFFIC PLANS

LEGEND

- REMOVAL ITEMS
- (A) EARTH EXCAVATION (20200100)
- (B) REMOVAL AND DISPOSAL OF UNSUITABLE MATERIAL (20201200)
- (C) PAVEMENT REMOVAL (44000100)
- (D) COMBINATION CURB AND GUTTER REMOVAL (44000500)
- (E) PAVED SHOULDER REMOVAL (44004250)
- (F) AGGREGATE SHOULDER REMOVAL (PAID FOR AS EARTH EXCAVATION)
- (G) MEDIAN REMOVAL (44003100)

- (1) FURNISHED EXCAVATION (20400800)
- (2) TOPSOIL EXCAVATION AND PLACEMENT (21101505)
- (3) TOPSOIL FURNISH AND PLACE, 4" (21101615)
- (4) SEEDING (SEE EROSION CONTROL PLANS FOR SEEDING TYPE)
- (5) AGGREGATE SUBGRADE IMPROVEMENT (30300001)
- (6) AGGREGATE SUBGRADE IMPROVEMENT 12" (30300112)
- (7) AGGREGATE SUBGRADE IMPROVEMENT 18" (30300118)
- (8) STABILIZED SUBBASE - HOT-MIX ASPHALT, 4" (31200500)
- (9) SUBBASE GRANULAR MATERIAL, TYPE B 4" (31101200)
- (10) PORTLAND CEMENT CONCRETE PAVEMENT 10 ½" (JOINTED) (42000511)

- (11) AGGREGATE SHOULDERS, TYPE A (48100200)
- (12) PORTLAND CEMENT CONCRETE SHOULDERS 10 ½" (48300510)
- (13) PIPE UNDERDRAINS, TYPE 2, 6" (60108206)
- (14) COMBINATION CONCRETE CURB AND GUTTER, TYPE B-6.24 (60605000)
- (15) CONCRETE BARRIER WALL (SPECIAL) (X6370050)
- (16) CONCRETE BARRIER BASE (SPECIAL) (X6370048)
- (17) SHOULDER RUMBLE STRIPS, 16 INCH (64200116)
- (18) PORTLAND CEMENT CONCRETE SIDEWALK, 6" (42400300)
- (19) SUBBASE GRANULAR MATERIAL, TYPE B 6" (31101400)
- (20) SUBBASE GRANULAR MATERIAL, TYPE B 8" (31101600)

MODEL: Typical - Typ 4 [Sheet]
FILE NAME: N:\IDOT\220628\CAD_Sheets\Civil\D264N98-int-typical.dgn

CHRISTOPHER B. BURKE ENGINEERING, LTD.
8575 W. Higgins Road, Suite 600
Rosemont, Illinois 60018
(847) 823-0500

USER NAME = nhowelllindgren	DESIGNED -	REVISED -	
	DRAWN -	REVISED -	
	CHECKED -	REVISED -	
PLOT DATE = 2/6/2025	DATE -	REVISED -	

STATE OF ILLINOIS
DEPARTMENT OF TRANSPORTATION

IL 38/I-39 INTERCHANGE IMPROVEMENTS
TYPICAL SECTIONS

SCALE: 1"=10' | SHEET 4 OF 5 SHEETS | STA. TO STA.

F.A.* RTE.	SECTION	COUNTY	TOTAL SHEETS	SHEET NO.
*	141-1HBR-3 & (9, 10) R-3	OGLE	508	55
		CONTRACT NO. 64N98		
	ILLINOIS	FED. AID PROJECT		

*FAI ROUTE 39 (I-39) & FAP 567 (IL 38)

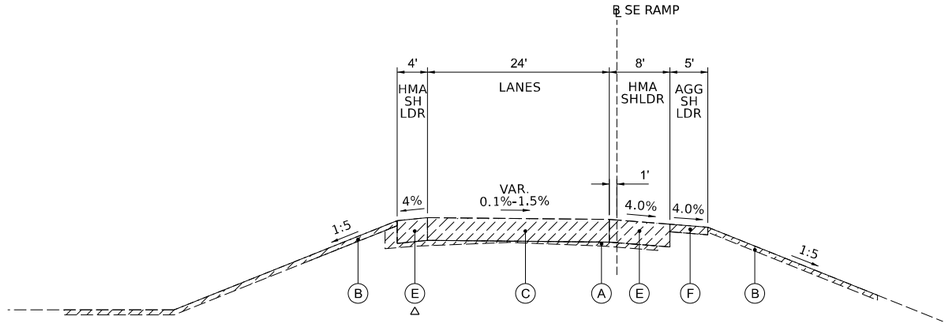

EXISTING I–39 SE RAMP TYPICAL SECTION

STA 121+23.51 TO STA 122+05.10

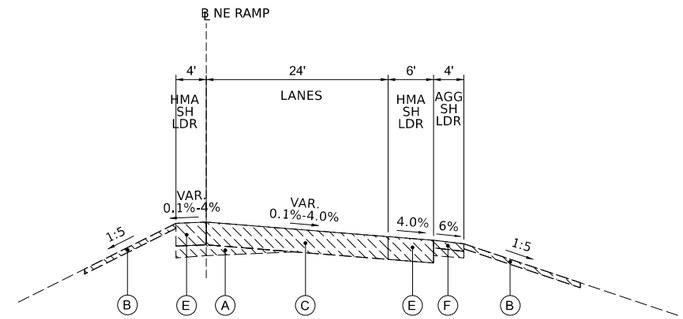

EXISTING I–39 NE RAMP TYPICAL SECTION

STA 11+22.84 TO STA 12+44.50

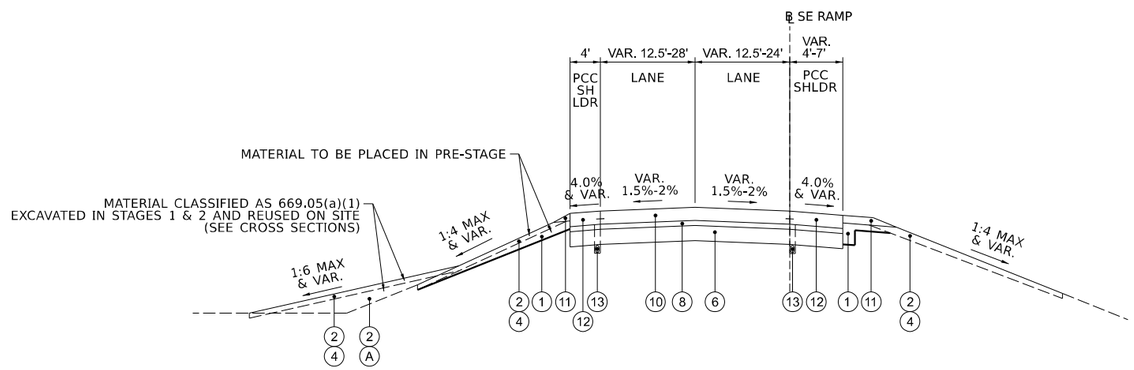

PROPOSED I–39 SE RAMP TYPICAL SECTION

STA 121+23.51 TO STA 122+05.10

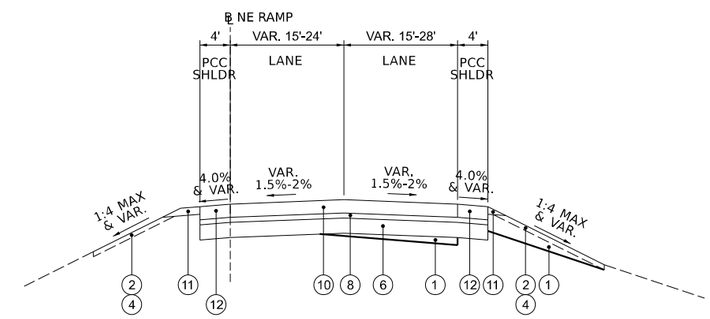

PROPOSED I–39 NE RAMP TYPICAL SECTION

STA 11+22.84 TO STA 12+44.50

△ RAMP PAVEMENT AND SHOULDERS TO BE REMOVED IN STAGES AS PER MAINTENANCE OF TRAFFIC PLANS

LEGEND

- REMOVAL ITEMS
- (A) EARTH EXCAVATION (20200100)
- (B) REMOVAL AND DISPOSAL OF UNSUITABLE MATERIAL (20201200)
- (C) PAVEMENT REMOVAL (44000100)
- (D) COMBINATION CURB AND GUTTER REMOVAL (44000500)
- (E) PAVED SHOULDER REMOVAL (44004250)
- (F) AGGREGATE SHOULDER REMOVAL (PAID FOR AS EARTH EXCAVATION)
- (G) MEDIAN REMOVAL (44003100)

- (1) FURNISHED EXCAVATION (20400800)
- (2) TOPSOIL EXCAVATION AND PLACEMENT (21101505)
- (3) TOPSOIL FURNISH AND PLACE, 4" (21101615)
- (4) SEEDING (SEE EROSION CONTROL PLANS FOR SEEDING TYPE)
- (5) AGGREGATE SUBGRADE IMPROVEMENT (30300001)
- (6) AGGREGATE SUBGRADE IMPROVEMENT 12" (30300112)
- (7) AGGREGATE SUBGRADE IMPROVEMENT 18" (30300118)
- (8) STABILIZED SUBBASE - HOT-MIX ASPHALT, 4" (31200500)
- (9) SUBBASE GRANULAR MATERIAL, TYPE B 4" (31101200)
- (10) PORTLAND CEMENT CONCRETE PAVEMENT 10 ½" (JOINTED) (42000511)

- (11) AGGREGATE SHOULDERS, TYPE A (48100200)
- (12) PORTLAND CEMENT CONCRETE SHOULDERS 10 ½" (48300510)
- (13) PIPE UNDERDRAINS, TYPE 2, 6" (60108206)
- (14) COMBINATION CONCRETE CURB AND GUTTER, TYPE B-6.24 (60605000)
- (15) CONCRETE BARRIER WALL (SPECIAL) (X6370050)
- (16) CONCRETE BARRIER BASE (SPECIAL) (X6370048)
- (17) SHOULDER RUMBLE STRIPS, 16 INCH (64200116)
- (18) PORTLAND CEMENT CONCRETE SIDEWALK, 6" (42400300)
- (19) SUBBASE GRANULAR MATERIAL, TYPE B 6" (31101400)
- (20) SUBBASE GRANULAR MATERIAL, TYPE B 8" (31101600)

MODEL: Typical - Typ 5 [Sheet]
FILE NAME: N:\IDOT2226\28\CAD_Sheets\Civil\D284N98-sht-typical.dgn

CHRISTOPHER B. BURKE ENGINEERING, LTD.
8575 W. Higgins Road, Suite 600
Rosemont, Illinois 60018
(847) 823-0500

USER NAME = nhowellindgren	DESIGNED -	REVISED -	
	DRAWN -	REVISED -	
	CHECKED -	REVISED -	
PLOT DATE = 2/6/2025	DATE -	REVISED -	

STATE OF ILLINOIS
DEPARTMENT OF TRANSPORTATION

IL 38/I-39 INTERCHANGE IMPROVEMENTS
TYPICAL SECTIONS

SCALE: 1"=10' | SHEET 5 OF 5 SHEETS | STA. | TO STA.

F.A.* RTE.	SECTION	COUNTY	TOTAL SHEETS	SHEET NO.
*	141-1HBR-3 & (9, 10) R-3	OGLE	508	56
		CONTRACT NO. 64N98		
	ILLINOIS	FED. AID PROJECT		

*FAI ROUTE 39 (I-39) & FAP 567 (IL 38)

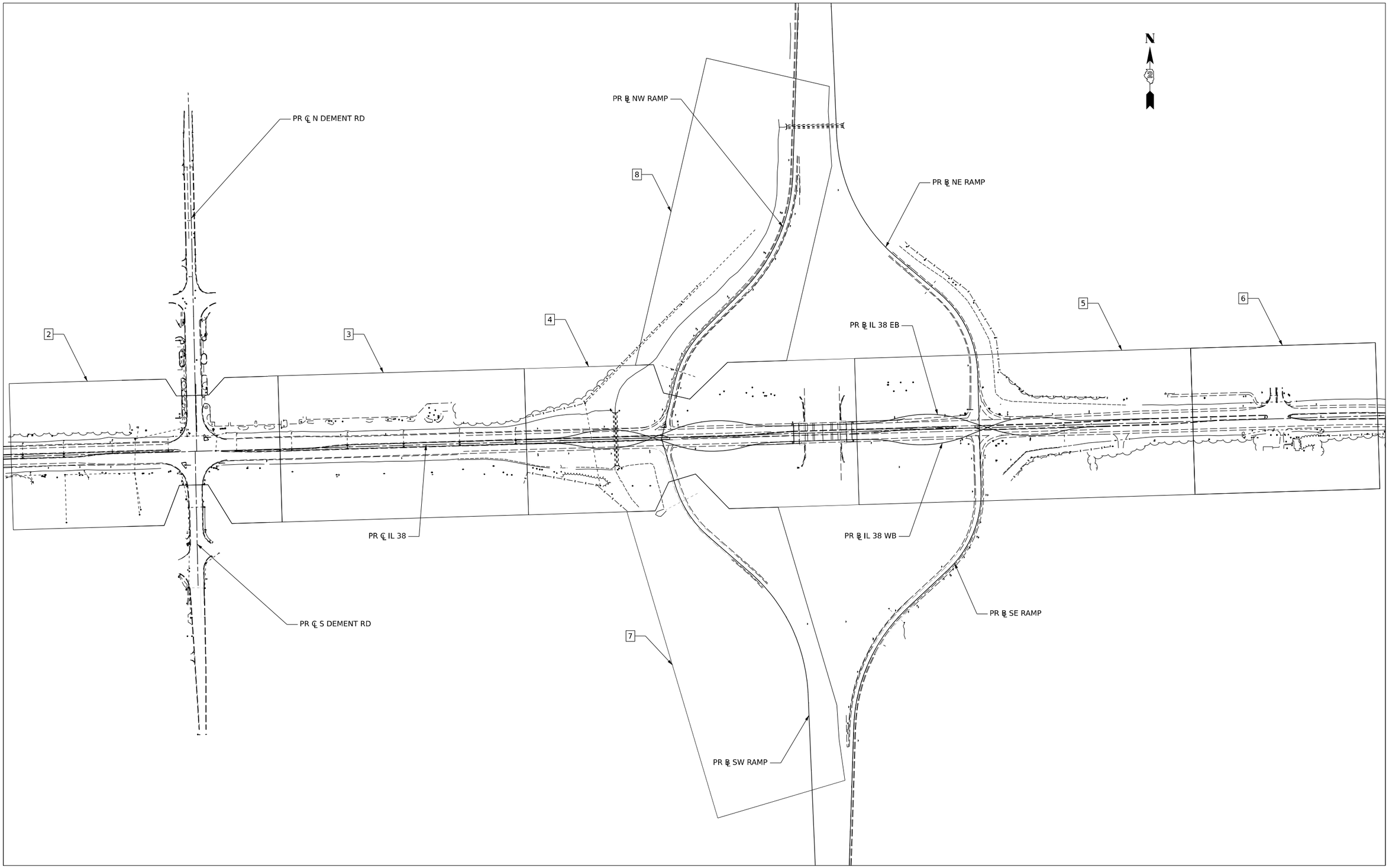

MODEL: key plan - Plan 1 [Sheet]
FILE NAME: N:\IDOT220628\CAD_Sheets\Civil\D264N98-sht-rem-keyplan.dgn

CHRISTOPHER B. BURKE ENGINEERING, LTD.
9575 W. Higgins Road, Suite 600
Rosemont, Illinois 60018
(847) 823-0500

USER NAME = nhowelllindgren	DESIGNED -	REVISED -	
	DRAWN -	REVISED -	
	CHECKED -	REVISED -	
PLOT DATE = 2/5/2025	DATE -	REVISED -	

STATE OF ILLINOIS
DEPARTMENT OF TRANSPORTATION

IL 38/I-39 INTERCHANGE IMPROVEMENTS
EXISTING CONDITIONS AND REMOVAL PLANS - KEY PLAN

SCALE: 1"=200' | SHEET 1 OF 8 SHEETS | STA. 3+24.31 TO STA. 62+74.31

F.A.* RTE.	SECTION	COUNTY	TOTAL SHEETS	SHEET NO.
*	141-1HBR-3 & (9, 10) R-3	OGLE	508	57
		CONTRACT NO. 64N98		
	ILLINOIS	FED. AID PROJECT		

*FAI ROUTE 39 (I-39) & FAP 567 (IL 38)

REMOVAL LEGEND

- PAVEMENT REMOVAL
- PAVED SHOULDER REMOVAL
- MEDIAN REMOVAL
- SIDEWALK REMOVAL
- CLASS B PATCHES
- SHOULDER REMOVAL AND REPLACEMENT (SPECIAL)
- ISLAND REMOVAL
- LINEAR REMOVAL ITEM
- STUMP REMOVAL

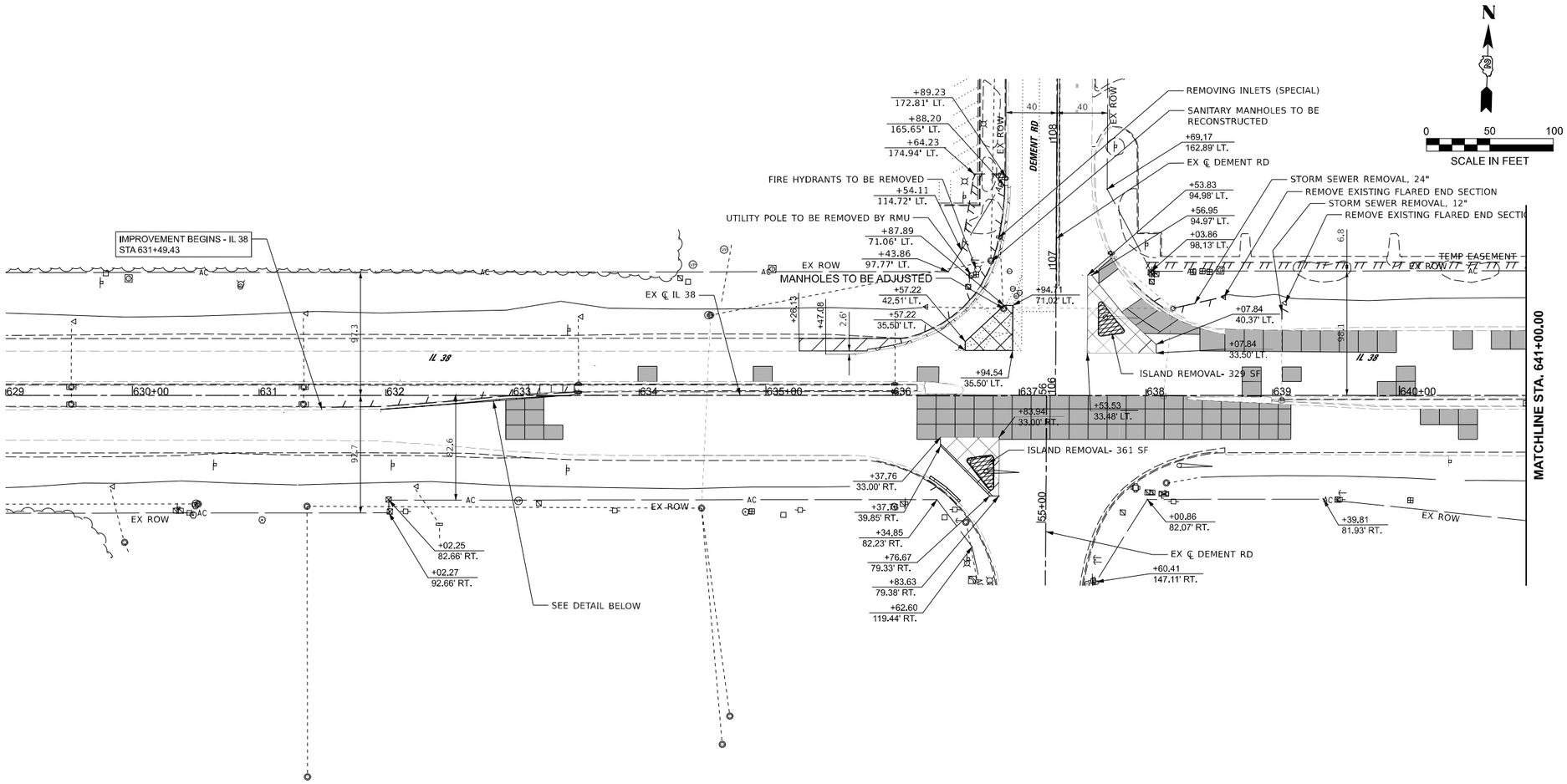

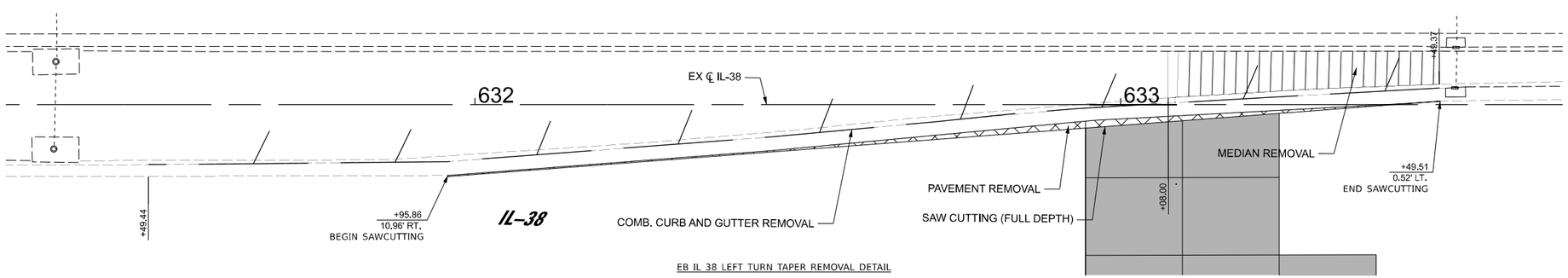

EB IL 38 LEFT TURN TAPER REMOVAL DETAIL

MODEL: PR_CL_38 - Plan 1 [Sheet]
FILE NAME: N:\IDOT\220628\CAD_Sheets\Civil\D264N98-sht-removal.dgn

CHRISTOPHER B. BURKE ENGINEERING, LTD.
9575 W. Higgins Road, Suite 600
Rosemont, Illinois 60018
(847) 823-0500

USER NAME = nhowelllindgren	DESIGNED -	REVISED -	
	DRAWN -	REVISED -	
	CHECKED -	REVISED -	
PLOT DATE = 2/6/2025	DATE -	REVISED -	

STATE OF ILLINOIS
DEPARTMENT OF TRANSPORTATION

IL 38/I-39 INTERCHANGE IMPROVEMENTS
EXISTING CONDITIONS AND REMOVAL PLANS

SCALE: 1"=50' | SHEET 2 OF 8 SHEETS | STA. 629+00.00 TO STA. 641+00.00

F.A.* RTE.	SECTION	COUNTY	TOTAL SHEETS	SHEET NO.
*	141-1HBR-3 & (9, 10) R-3	OGLE	508	58
		CONTRACT NO. 64N98		
	ILLINOIS	FED. AID PROJECT		

*FAI ROUTE 39 (I-39) & FAP 567 (IL 38)

REMOVAL LEGEND

- PAVEMENT REMOVAL
- PAVED SHOULDER REMOVAL
- MEDIAN REMOVAL
- SIDEWALK REMOVAL
- CLASS B PATCHES
- SHOULDER REMOVAL AND REPLACEMENT (SPECIAL)
- ISLAND REMOVAL
- LINEAR REMOVAL ITEM
- STUMP REMOVAL

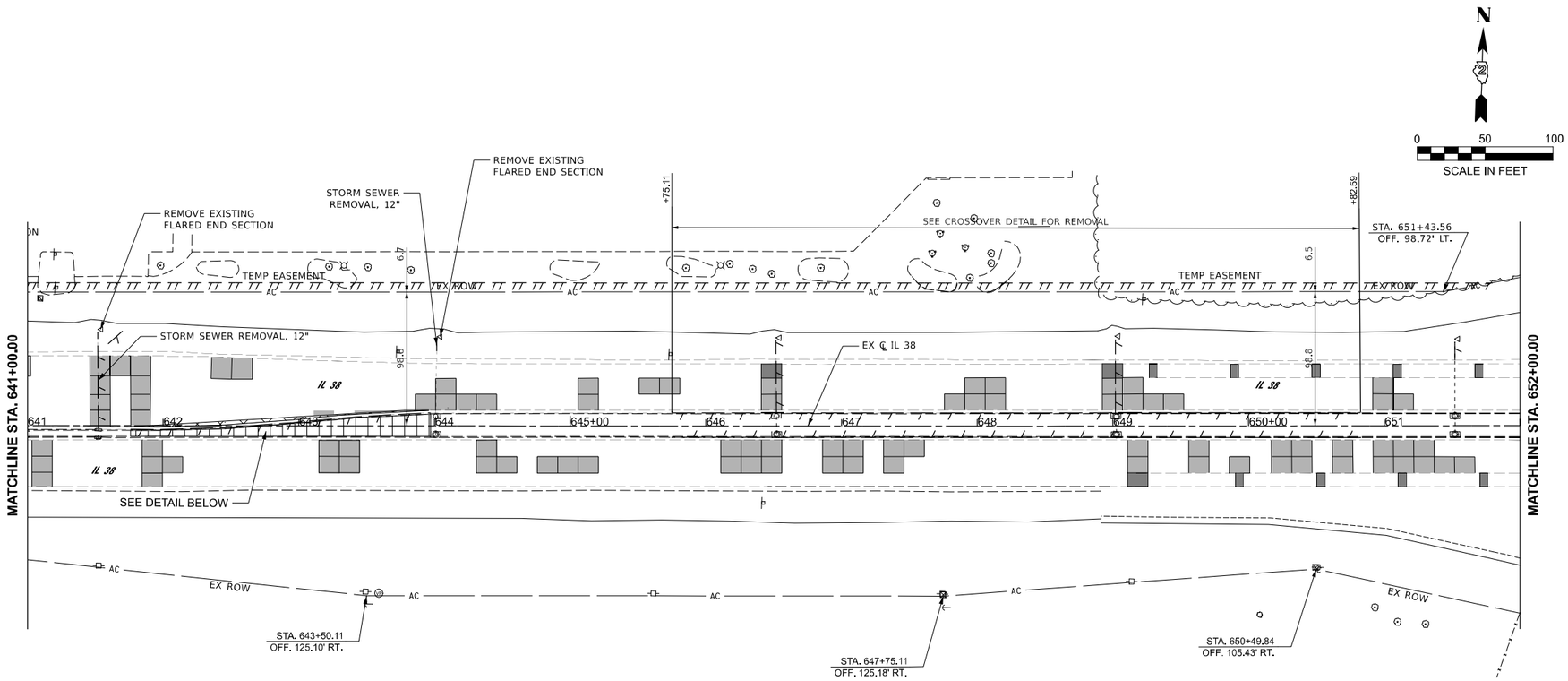

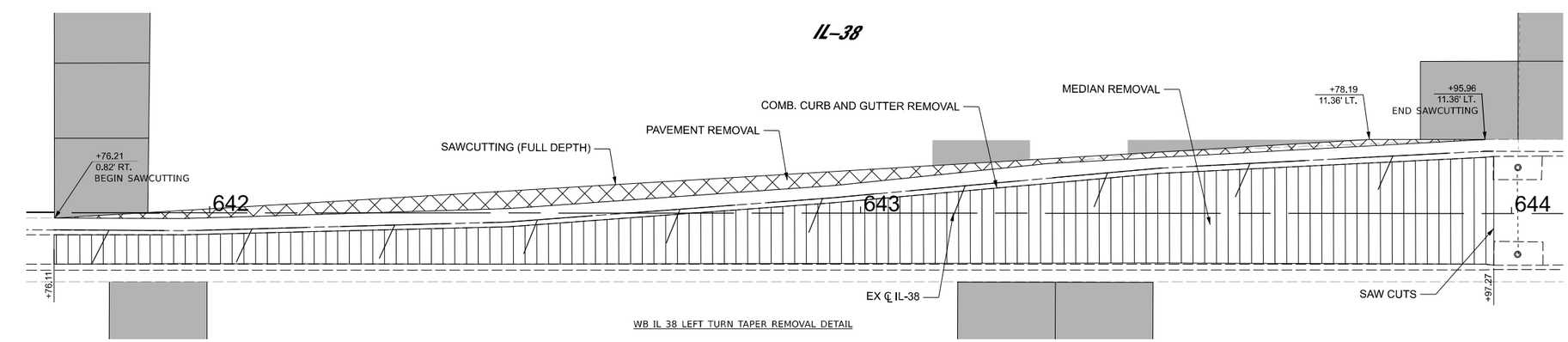

WB IL 38 LEFT TURN TAPER REMOVAL DETAIL

MODEL: PR_CL_38 - Plan 2 [Sheet]
FILE NAME: N:\IDOT\220628\CAD_Sheets\Civil\D264N98-sht-removal.dgn

CHRISTOPHER B. BURKE ENGINEERING, LTD.
9575 W. Higgins Road, Suite 600
Rosemont, Illinois 60018
(847) 823-0500

USER NAME = nhowelllindgren	DESIGNED -	REVISED -	
	DRAWN -	REVISED -	
	CHECKED -	REVISED -	
PLOT DATE = 2/5/2025	DATE -	REVISED -	

STATE OF ILLINOIS
DEPARTMENT OF TRANSPORTATION

IL 38/I-39 INTERCHANGE IMPROVEMENTS
EXISTING CONDITIONS AND REMOVALS

SCALE: 1"=50' | SHEET 3 OF 8 SHEETS | STA. 641+00.00 TO STA. 652+00.00

F.A.* RTE.	SECTION	COUNTY	TOTAL SHEETS	SHEET NO.
*	141-1HBR-3 & (9, 10) R-3	OGLE	508	59
		CONTRACT NO. 64N98		
	ILLINOIS	FED. AID PROJECT		

*FAI ROUTE 39 (I-39) & FAP 567 (IL 38)

REMOVAL LEGEND

- PAVEMENT REMOVAL
- PAVED SHOULDER REMOVAL
- MEDIAN REMOVAL
- SIDEWALK REMOVAL
- CLASS B PATCHES
- SHOULDER REMOVAL AND REPLACEMENT (SPECIAL)
- ISLAND REMOVAL
- LINEAR REMOVAL ITEM
- STUMP REMOVAL

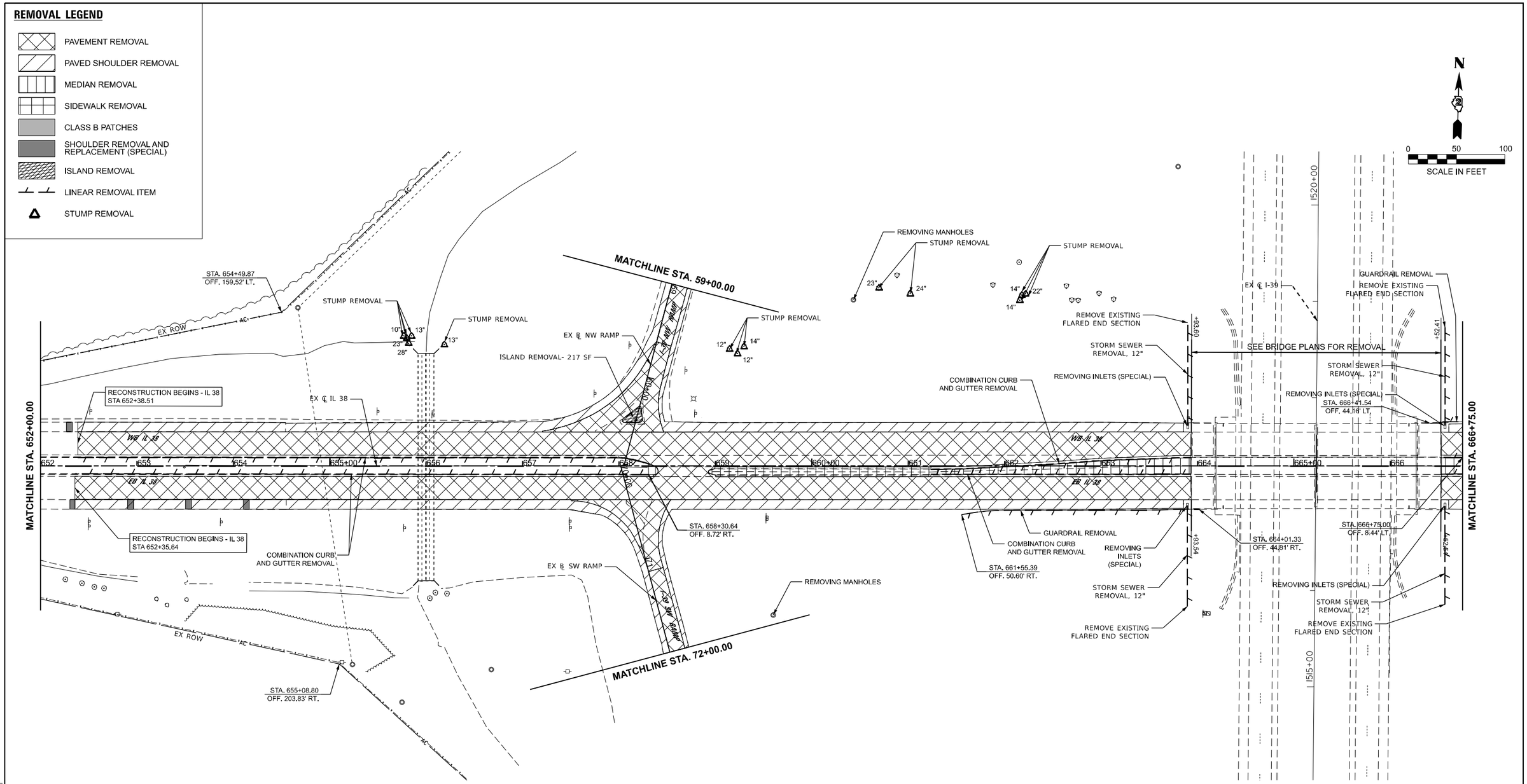

MODEL: PR_CL_38 - Plan 3 [Sheet]
FILE NAME: N:\IDOT\220628\CAD_Sheets\Civil\D264N98-sht-removal.dgn

CHRISTOPHER B. BURKE ENGINEERING, LTD.
9575 W. Higgins Road, Suite 600
Rosemont, Illinois 60018
(847) 823-0520

USER NAME = nhowellllindgren	DESIGNED -	REVISED -	
	DRAWN -	REVISED -	
	CHECKED -	REVISED -	
PLOT DATE = 3/19/2025	DATE -	REVISED -	

STATE OF ILLINOIS
DEPARTMENT OF TRANSPORTATION

IL 38/I-39 INTERCHANGE IMPROVEMENTS
EXISTING CONDITIONS AND REMOVAL PLANS

SCALE: 1"=50' | SHEET 4 OF 8 SHEETS | STA. 652+00.00 TO STA. 666+75.00

F.A.* RTE.	SECTION	COUNTY	TOTAL SHEETS	SHEET NO.
*	141-1HBR-3 & (9, 10) R-3	OGLE	508	60
		CONTRACT NO. 64N98		
	ILLINOIS	FED. AID PROJECT		

*FAI ROUTE 39 (I-39) & FAP 567 (IL 38)

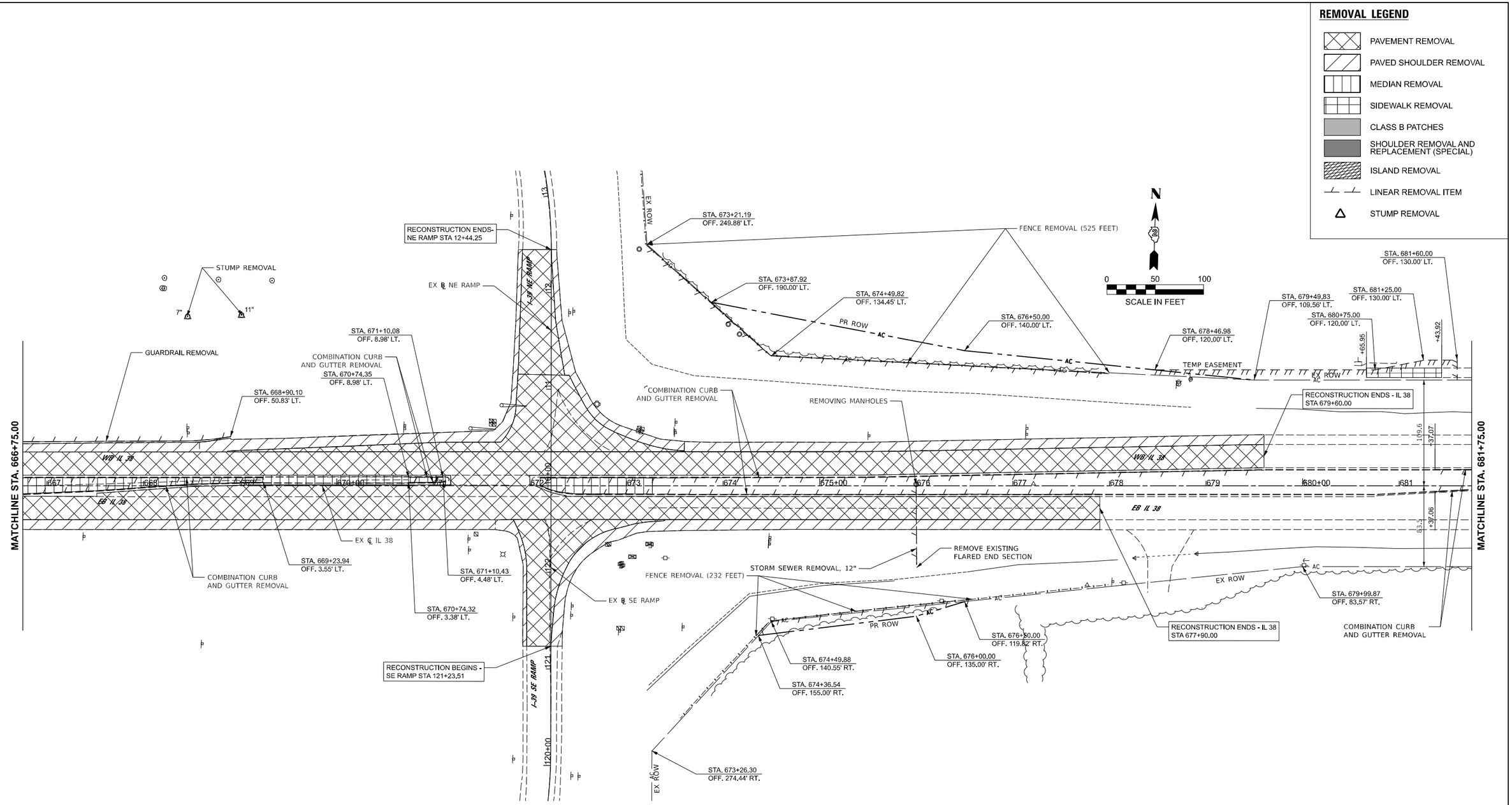

MODEL: PR_CL_38 - Plan 4 {Sheet}
FILE NAME: N:\IDOT2220628\CAD_Sheets\Civil\D264N98-sht-removal.dgn

CHRISTOPHER B. BURKE ENGINEERING, LTD.
9575 W. Higgins Road, Suite 600
Rosemont, Illinois 60018
(847) 823-0500

USER NAME = nhowelllindgren	DESIGNED -	REVISED -	
	DRAWN -	REVISED -	
	CHECKED -	REVISED -	
PLOT DATE = 2/6/2025	DATE -	REVISED -	

STATE OF ILLINOIS
DEPARTMENT OF TRANSPORTATION

IL 38/I-39 INTERCHANGE IMPROVEMENTS
EXISTING CONDITIONS AND REMOVAL PLANS

SCALE: 1"=50' | SHEET 5 OF 8 SHEETS | STA. 666+75.00 TO STA. 681+75.00

F.A.* RTE.	SECTION	COUNTY	TOTAL SHEETS	SHEET NO.
*	141-1HBR-3 & (9, 10) R-3	OGLE	508	61
		CONTRACT NO. 64N98		
	ILLINOIS	FED. AID PROJECT		

*FAI ROUTE 39 (I-39) & FAP 567 (IL 38)

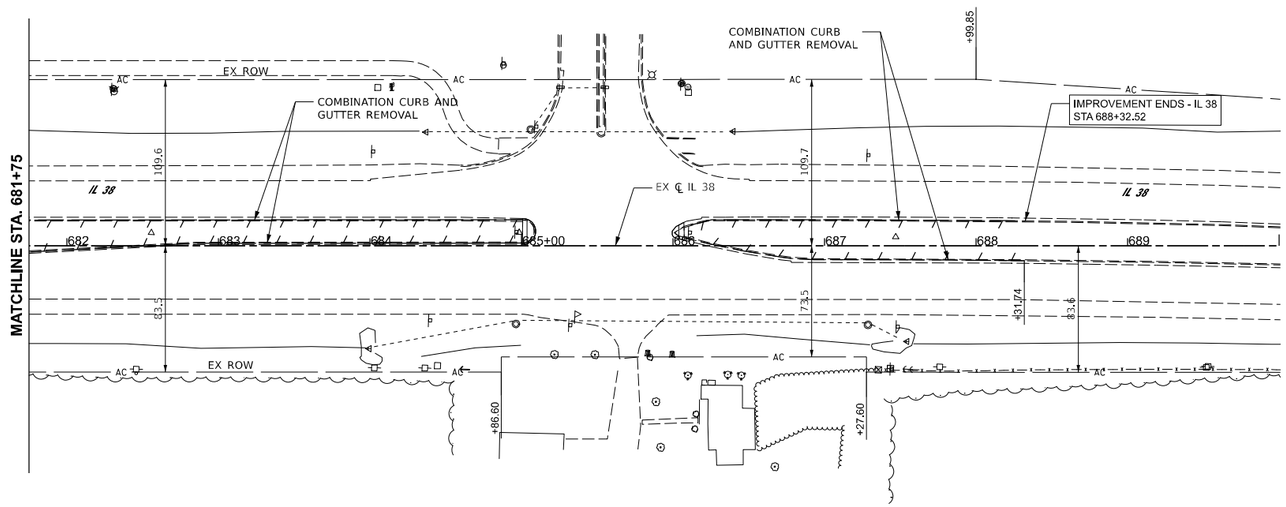

N

0 50 100

SCALE IN FEET

REMOVAL LEGEND

- PAVEMENT REMOVAL
- PAVED SHOULDER REMOVAL
- MEDIAN REMOVAL
- SIDEWALK REMOVAL
- CLASS B PATCHES
- SHOULDER REMOVAL AND REPLACEMENT (SPECIAL)
- ISLAND REMOVAL
- LINEAR REMOVAL ITEM
- STUMP REMOVAL

MODEL: PR_CL_38 - Plan 9 [Sheet]
FILE NAME: N:\IDOT\220628\CAD_Sheets\Civil\D264N98-sht-removal.dgn

CHRISTOPHER B. BURKE ENGINEERING, LTD.
9575 W. Higgins Road, Suite 600
Rosemont, Illinois 60018
(847) 823-0500

USER NAME = nhowelllindgren	DESIGNED -	REVISED -	
	DRAWN -	REVISED -	
	CHECKED -	REVISED -	
PLOT DATE = 2/6/2025	DATE -	REVISED -	

STATE OF ILLINOIS
DEPARTMENT OF TRANSPORTATION

IL 38/I-39 INTERCHANGE IMPROVEMENTS
EXISTING CONDITIONS AND REMOVAL PLANS

SCALE: 1"=50' | SHEET 6 OF 8 SHEETS | STA. 681+75.00 TO STA. 690+00.82

F.A.* RTE.	SECTION	COUNTY	TOTAL SHEETS	SHEET NO.
*	141-1HBR-3 & (9, 10) R-3	OGLE	508	62
		CONTRACT NO. 64N98		
	ILLINOIS	FED. AID PROJECT		

*FAI ROUTE 39 (I-39) & FAP 567 (IL 38)

REMOVAL LEGEND

- PAVEMENT REMOVAL
- PAVED SHOULDER REMOVAL
- MEDIAN REMOVAL
- SIDEWALK REMOVAL
- CLASS B PATCHES
- SHOULDER REMOVAL AND REPLACEMENT (SPECIAL)
- ISLAND REMOVAL
- LINEAR REMOVAL ITEM
- STUMP REMOVAL

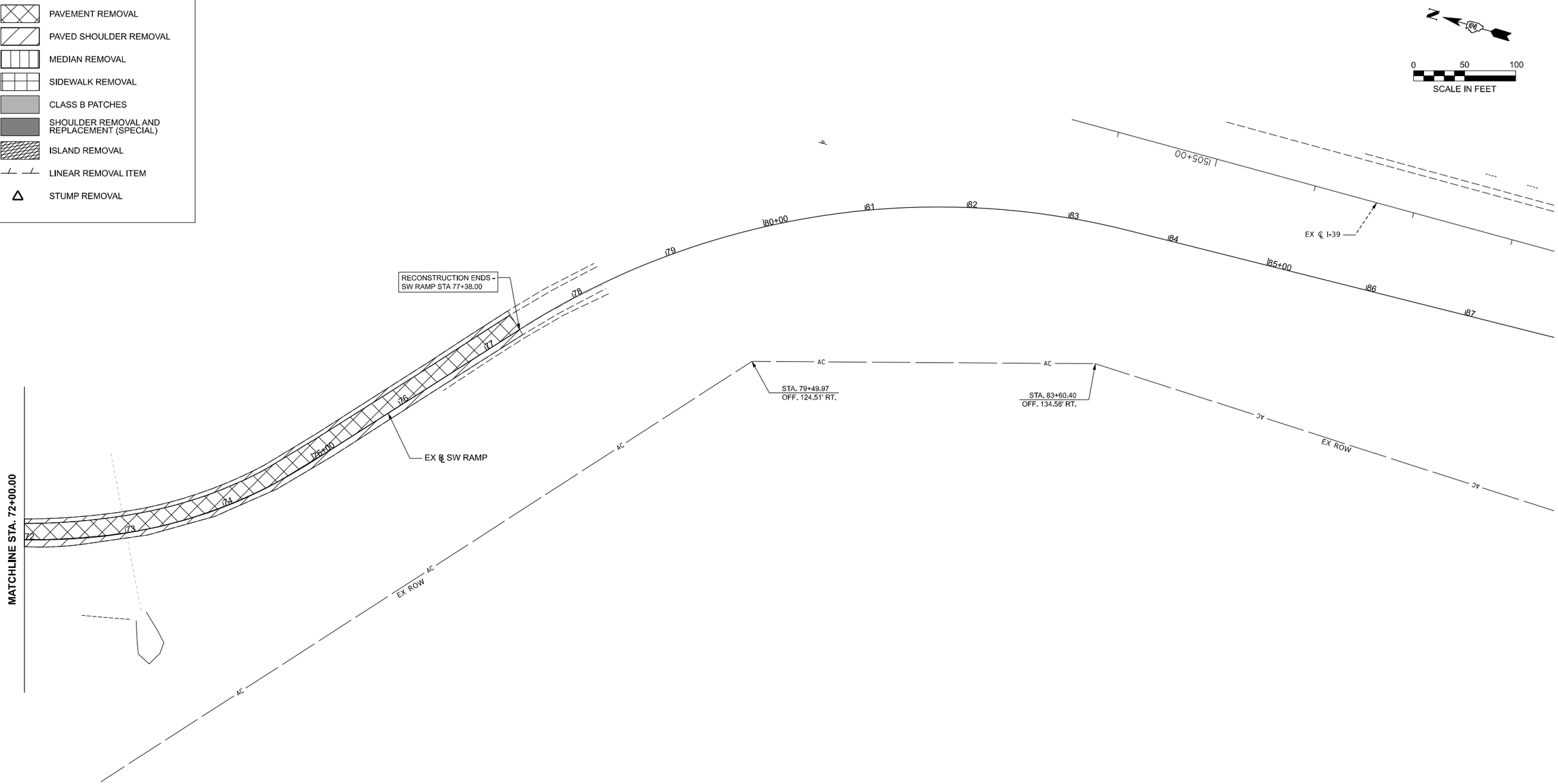

MODEL: PR_CL_38 - Plan 7 [Sheet]
FILE NAME: N:\IDOT\220628\CAD_Sheets\Civil\D264N98-sht-removal.dgn

CHRISTOPHER B. BURKE ENGINEERING, LTD. 8575 W. Higgins Road, Suite 600 Rosemont, Illinois 60018 (847) 823-0500	USER NAME = nhowelllindgren	DESIGNED -	REVISED -	STATE OF ILLINOIS DEPARTMENT OF TRANSPORTATION	IL 38/I-39 INTERCHANGE IMPROVEMENTS EXISTING CONDITIONS AND REMOVAL PLANS	F.A.* RTE.	SECTION	COUNTY	TOTAL SHEETS	SHEET NO.
		DRAWN -	REVISED -			*	141-1HBR-3 & (9, 10) R-3	OGLE	508	63
		CHECKED -	REVISED -			CONTRACT NO. 64N98				
	PLOT DATE = 2/6/2025	DATE -	REVISED -		SCALE: 1"=50' SHEET 7 OF 8 SHEETS STA. 72+00.00 TO STA. 87+90.00	ILLINOIS FED. AID PROJECT				

*FAI ROUTE 39 (I-39) & FAP 567 (IL 38)

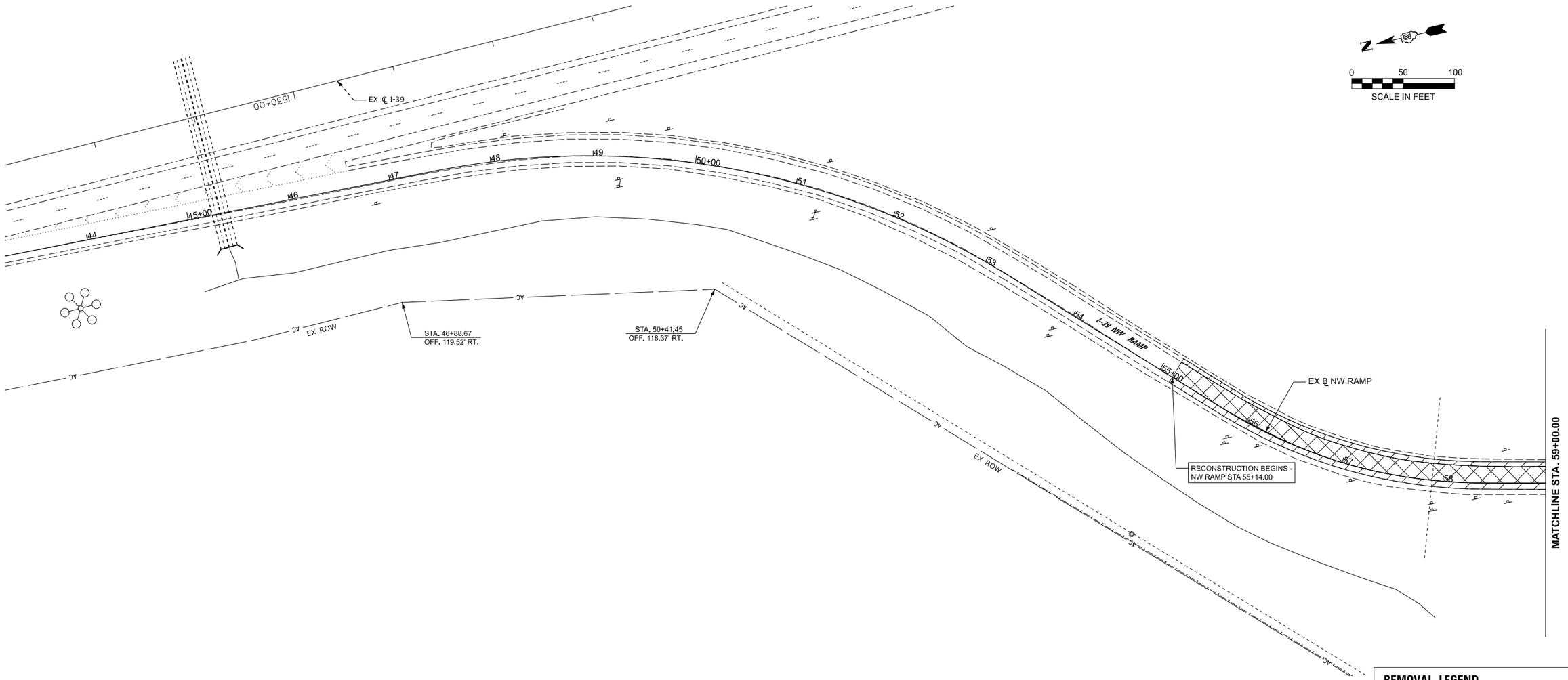

REMOVAL LEGEND

- PAVEMENT REMOVAL
- PAVED SHOULDER REMOVAL
- MEDIAN REMOVAL
- SIDEWALK REMOVAL
- CLASS B PATCHES
- SHOULDER REMOVAL AND REPLACEMENT (SPECIAL)
- ISLAND REMOVAL
- LINEAR REMOVAL ITEM
- STUMP REMOVAL

MODEL: PR_CL_38 - Plan 8 [Sheet]
FILE NAME: N:\IDOT\220628\CAD_Sheets\Civil\D264N98-sht-removal.dgn

CHRISTOPHER B. BURKE ENGINEERING, LTD.
9575 W. Higgins Road, Suite 600
Rosemont, Illinois 60018
(847) 823-0500

USER NAME = nhowelllindgren	DESIGNED -	REVISED -	
	DRAWN -	REVISED -	
	CHECKED -	REVISED -	
PLOT DATE = 2/6/2025	DATE -	REVISED -	

STATE OF ILLINOIS
DEPARTMENT OF TRANSPORTATION

IL 38/I-39 INTERCHANGE IMPROVEMENTS
EXISTING CONDITIONS AND REMOVAL PLANS

SCALE: 1"=50' | SHEET 8 OF 8 SHEETS | STA. 43+20.00 TO STA. 59+00.00

F.A.* RTE.	SECTION	COUNTY	TOTAL SHEETS	SHEET NO.
*	141-1HBR-3 & (9, 10) R-3	OGLE	508	64
		CONTRACT NO. 64N98		
	ILLINOIS	FED. AID PROJECT		

*FAI ROUTE 39 (I-39) & FAP 567 (IL 38)

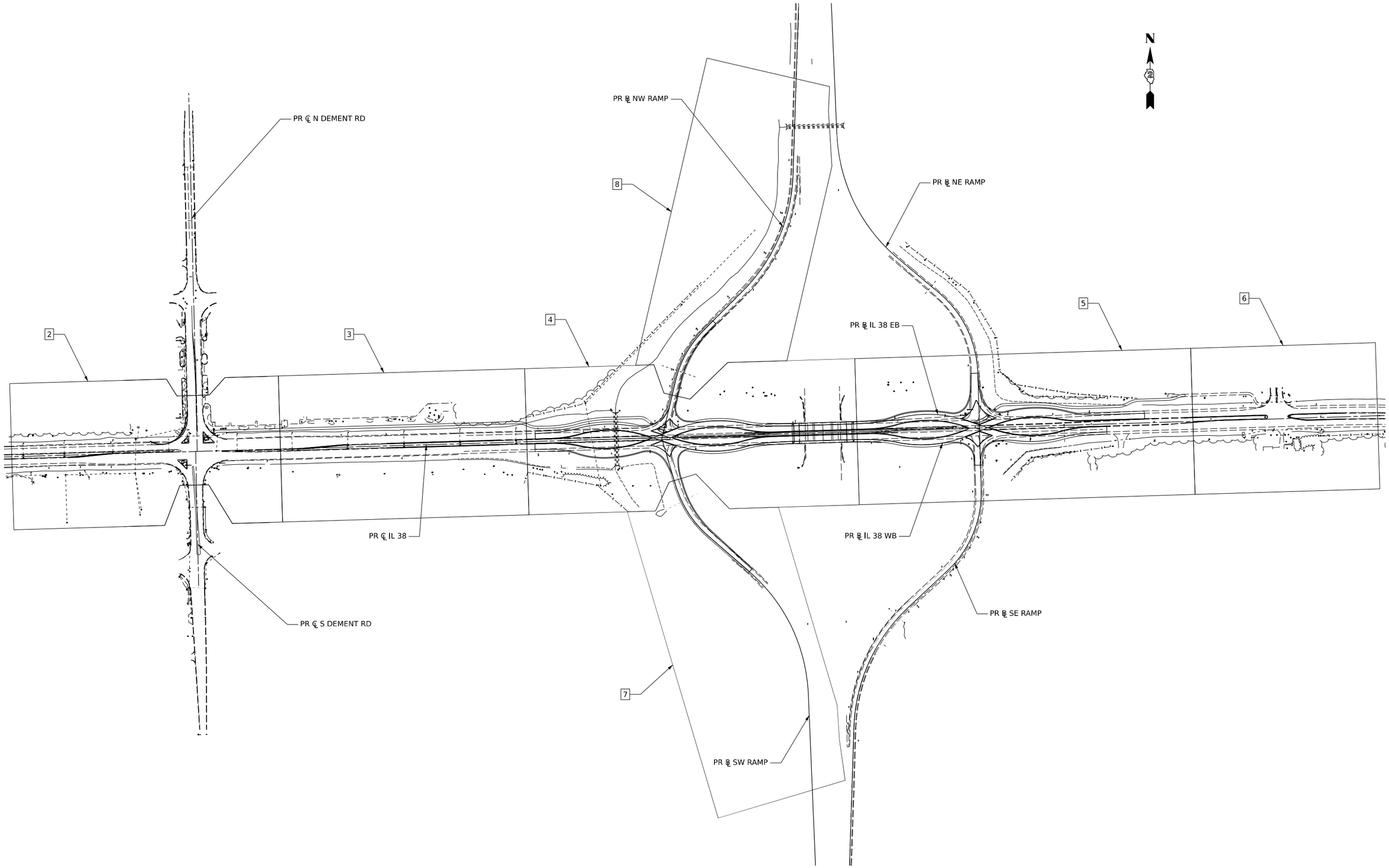

MODEL: key plan - Plan 1 [Sheet]
FILE NAME: N:\DOT\220628\CAD_Sheets\Civil\D284N98-sht-rdy-keyplan.dgn

CHRISTOPHER B. BURKE ENGINEERING, LTD.
9575 W. Higgins Road, Suite 600
Rosemont, Illinois 60018
(847) 823-0500

USER NAME = nhowelllindgren	DESIGNED -	REVISED -	
	DRAWN -	REVISED -	
	CHECKED -	REVISED -	
PLOT DATE = 2/5/2025	DATE -	REVISED -	

STATE OF ILLINOIS
DEPARTMENT OF TRANSPORTATION

IL 38/I-39 INTERCHANGE IMPROVEMENTS
PROPOSED PLAN - KEY PLAN

SCALE: 1"=200' | SHEET 1 OF 8 SHEETS | STA. 4+81.26 TO STA. 64+31.26

F.A.* RTE.	SECTION	COUNTY	TOTAL SHEETS	SHEET NO.
*	141-1HBR-3 & (9, 10) R-3	OGLE	508	65
		CONTRACT NO. 64N98		
	ILLINOIS	FED. AID PROJECT		

*FAI ROUTE 39 (I-39) & FAP 567 (IL 38)

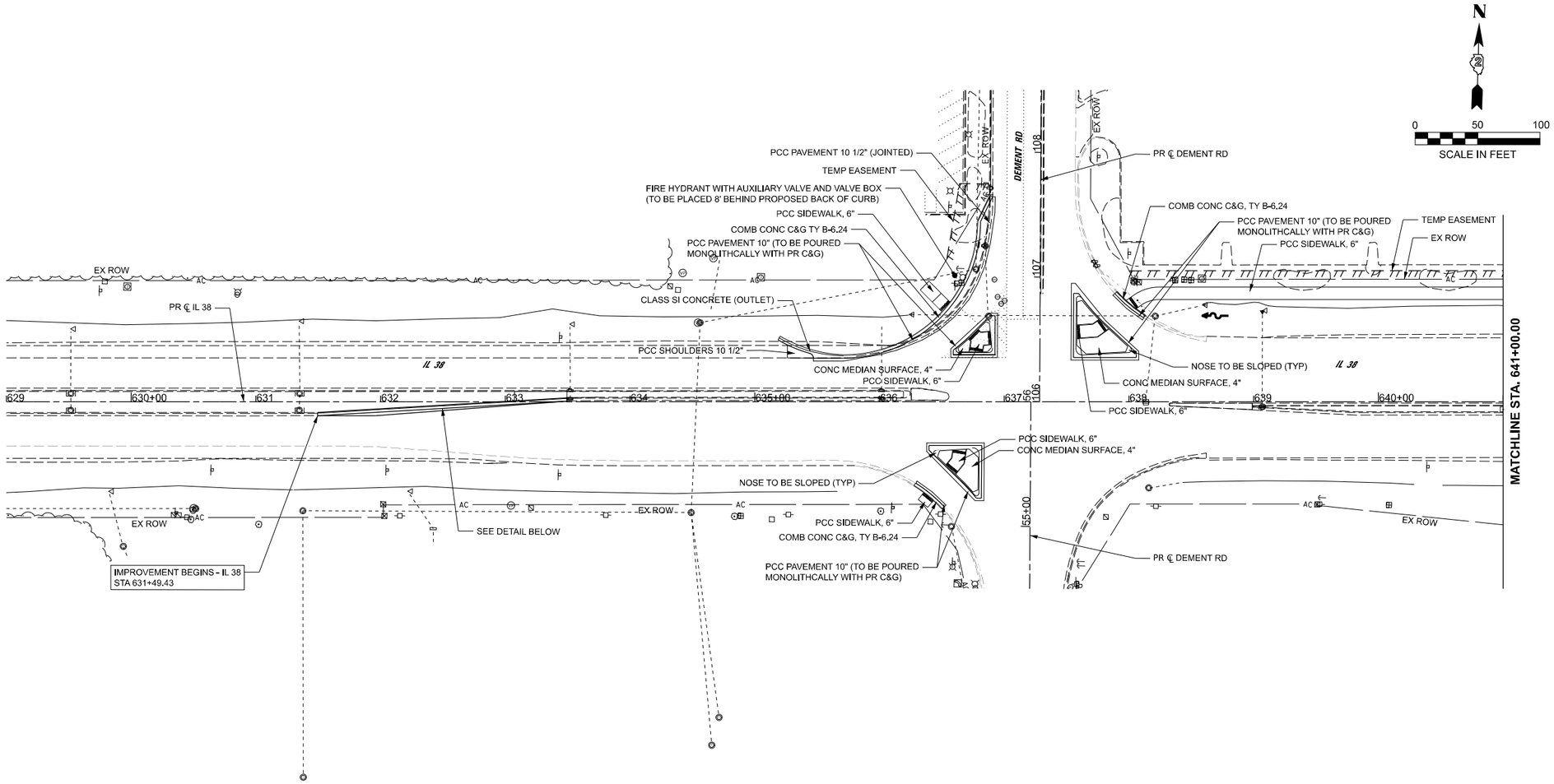

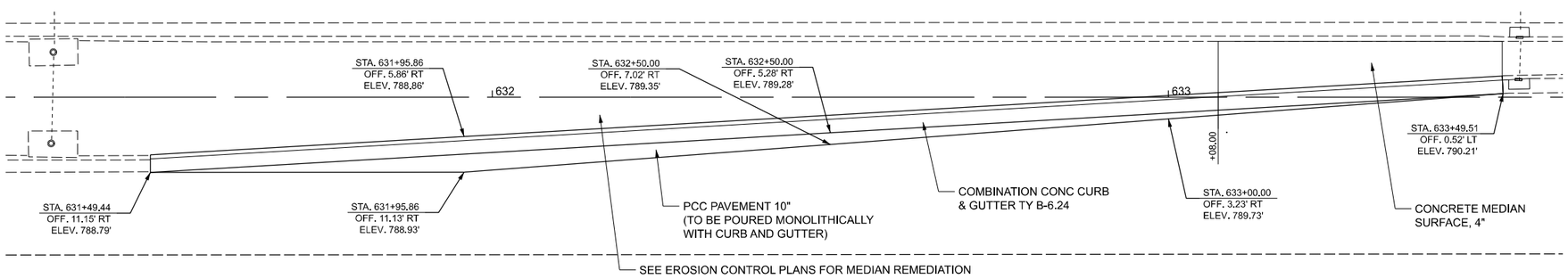

EB IL 38 LEFT TURN LANE TAPER REPLACEMENT DETAIL

NOTE: SEE GEOMETRIC LAYOUT DETAILS
AND SIDEWALK RAMP GRADING DETAILS
SHEETS FOR ADDITIONAL INFORMATION
ON PROPOSED ISLANDS AND ADA RAMPS

MODEL: PR_CL_38 - Plan 1 [Sheet]
FILE NAME: N:\IDOT\220628\CAD_Sheets\Civil\D2644N98-sht-plan.dgn

CHRISTOPHER B. BURKE ENGINEERING, LTD.
9575 W. Higgins Road, Suite 600
Rosemont, Illinois 60018
(847) 823-0500

USER NAME = nhowellilindgren	DESIGNED -	REVISED -	
	DRAWN -	REVISED -	
	CHECKED -	REVISED -	
PLOT DATE = 2/6/2025	DATE -	REVISED -	

STATE OF ILLINOIS
DEPARTMENT OF TRANSPORTATION

IL 38/I-39 INTERCHANGE IMPROVEMENTS
PROPOSED PLANS

SCALE: 1"=50' | SHEET 2 OF 8 SHEETS | STA. 629+00.00 TO STA. 641+00.00

F.A.* RTE.	SECTION	COUNTY	TOTAL SHEETS	SHEET NO.
*	141-1HBR-3 & (9, 10) R-3	OGLE	508	66
		CONTRACT NO. 64N98		
	ILLINOIS	FED. AID PROJECT		

*FAI ROUTE 39 (I-39) & FAP 567 (IL 38)

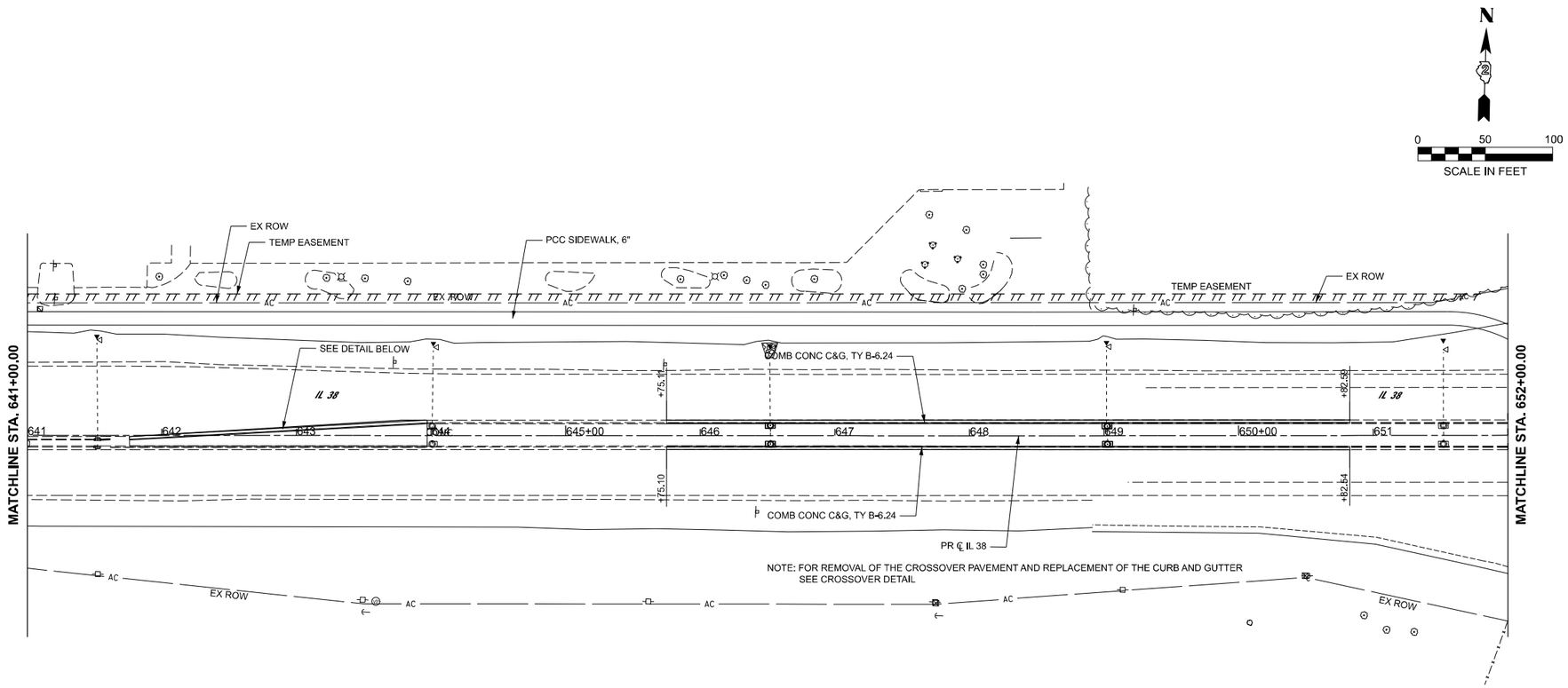

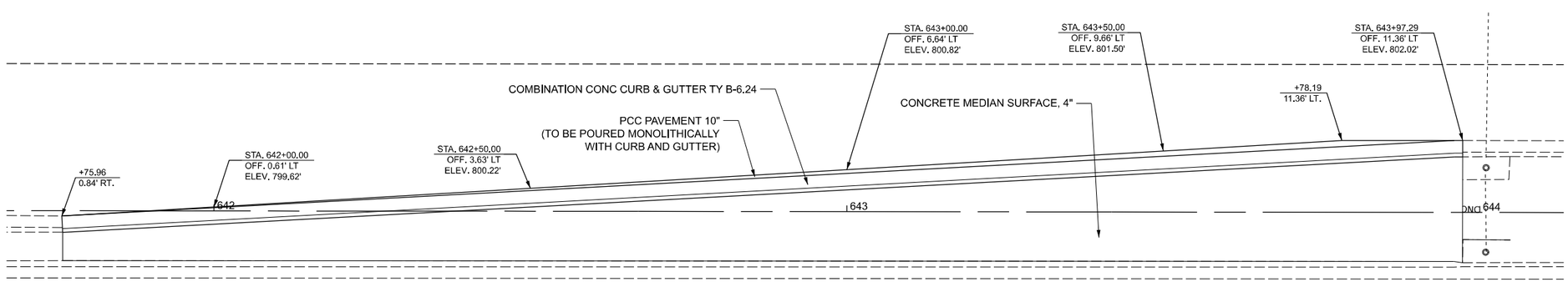

WB IL 38 LEFT TURN TAPER REPLACEMENT DETAIL

MODEL: PR_CL_38 - Plan 2 [Sheet]
FILE NAME: N:\DOT\220628\CAD_Sheets\Civil\D284N98-sht-plan.dgn

CHRISTOPHER B. BURKE ENGINEERING, LTD.
9575 W. Higgins Road, Suite 600
Rosemont, Illinois 60018
(847) 823-0500

USER NAME = nhowellilindgren	DESIGNED -	REVISED -
	DRAWN -	REVISED -
	CHECKED -	REVISED -
PLOT DATE = 2/6/2025	DATE -	REVISED -

STATE OF ILLINOIS
DEPARTMENT OF TRANSPORTATION

IL 38/I-39 INTERCHANGE IMPROVEMENTS
PROPOSED PLANS

SCALE: 1"=50' | SHEET 3 OF 8 SHEETS | STA. 641+00.00 TO STA. 652+00.00

F.A.* RTE.	SECTION	COUNTY	TOTAL SHEETS	SHEET NO.
*	141-1HBR-3 & (9, 10) R-3	OGLE	508	67

CONTRACT NO. 64N98

ILLINOIS | FED. AID PROJECT

*FAI ROUTE 39 (I-39) & FAP 567 (IL 38)

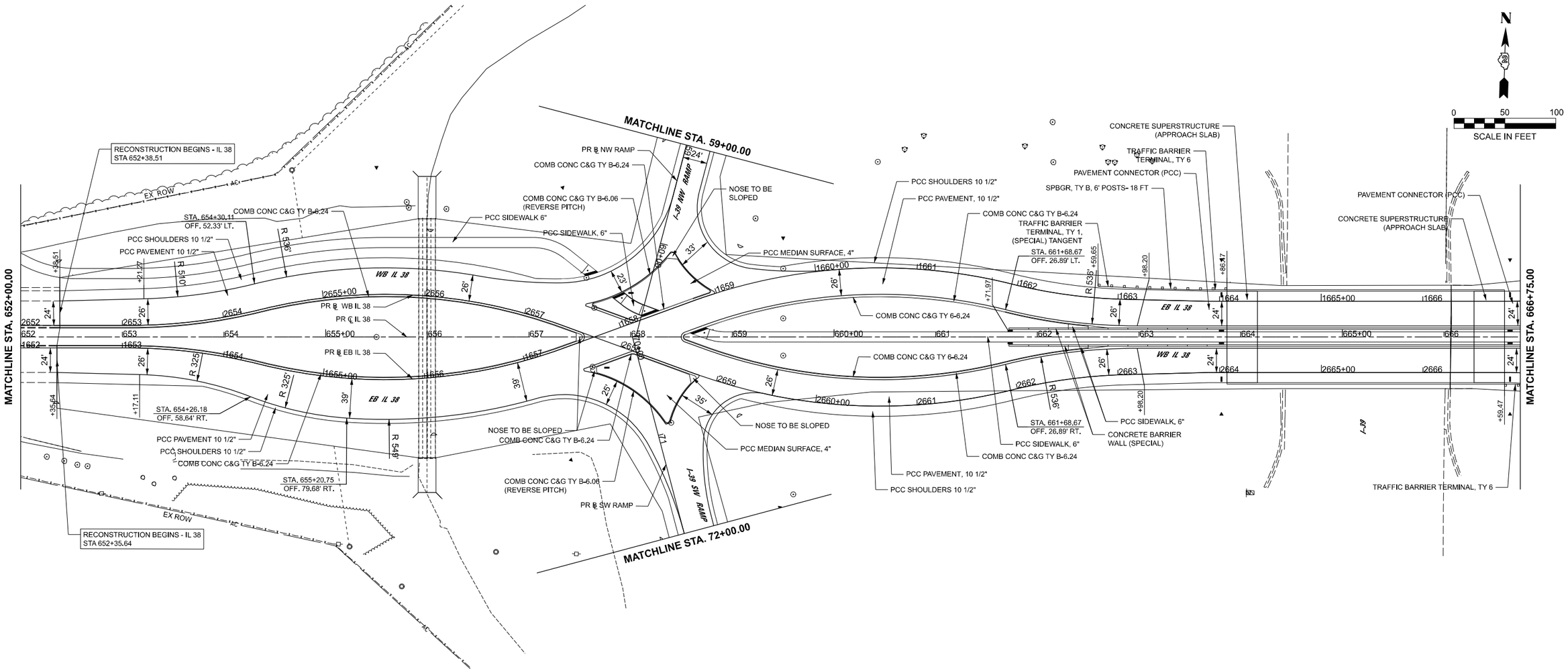

NOTE: SEE GEOMETRIC LAYOUT DETAILS AND SIDEWALK RAMP GRADING DETAILS SHEETS FOR ADDITIONAL INFORMATION ON PROPOSED ISLANDS AND ADA RAMPS

MODEL: PR_CL_38 - Plan 3 [Sheet]
FILE NAME: N:\IDOT\220628\CAD_Sheets\Civil\D264N98-sht-plan.dgn

CHRISTOPHER B. BURKE ENGINEERING, LTD.
9575 W. Higgins Road, Suite 600
Rosemont, Illinois 60018
(847) 823-0500

USER NAME = nhowelllindgren	DESIGNED -	REVISED -	
	DRAWN -	REVISED -	
	CHECKED -	REVISED -	
PLOT DATE = 3/19/2025	DATE -	REVISED -	

STATE OF ILLINOIS
DEPARTMENT OF TRANSPORTATION

IL 38/I-39 INTERCHANGE IMPROVEMENTS
PROPOSED PLANS

SCALE: 1"=50' | SHEET 4 OF 8 SHEETS | STA. 652+00.00 TO STA. 666+75.00

F.A.* RTE.	SECTION	COUNTY	TOTAL SHEETS	SHEET NO.
*	141-1HBR-3 & (9, 10) R-3	OGLE	508	68
		CONTRACT NO. 64N98		
	ILLINOIS	FED. AID PROJECT		

*FAI ROUTE 39 (I-39) & FAP 567 (IL 38)

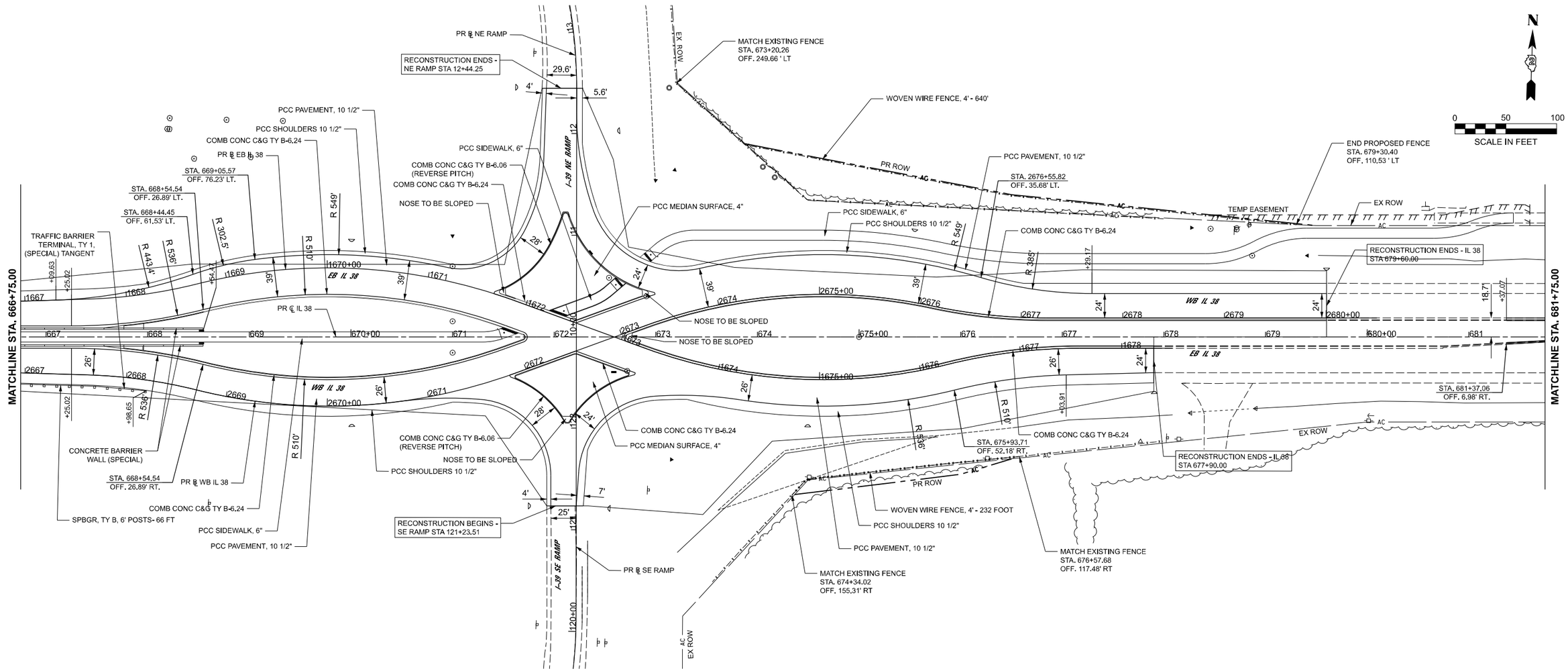

NOTE: SEE GEOMETRIC LAYOUT DETAILS AND SIDEWALK RAMP GRADING DETAILS SHEETS FOR ADDITIONAL INFORMATION ON PROPOSED ISLANDS AND ADA RAMPS

MODEL: PR_CL_38 - Plan 4 [Sheet]
FILE NAME: N:\IDOT\220628\CAD_Sheets\Civil\D264N98-sht-plan.dgn

CHRISTOPHER B. BURKE ENGINEERING, LTD.
9575 W. Higgins Road, Suite 600
Rosemont, Illinois 60018
(847) 823-0500

USER NAME = nhowellilindgren	DESIGNED -	REVISED -	
	DRAWN -	REVISED -	
	CHECKED -	REVISED -	
PLOT DATE = 3/14/2025	DATE -	REVISED -	

STATE OF ILLINOIS
DEPARTMENT OF TRANSPORTATION

IL 38/I-39 INTERCHANGE IMPROVEMENTS
PROPOSED PLANS

SCALE: 1"=50' | SHEET 5 OF 8 SHEETS | STA. 666+75.00 TO STA. 681+75.00

F.A.* RTE.	SECTION	COUNTY	TOTAL SHEETS	SHEET NO.
*	141-1HBR-3 & (9, 10) R-3	OGLE	508	69
		CONTRACT NO. 64N98		
		ILLINOIS FED. AID PROJECT		

*FAI ROUTE 39 (I-39) & FAP 567 (IL 38)

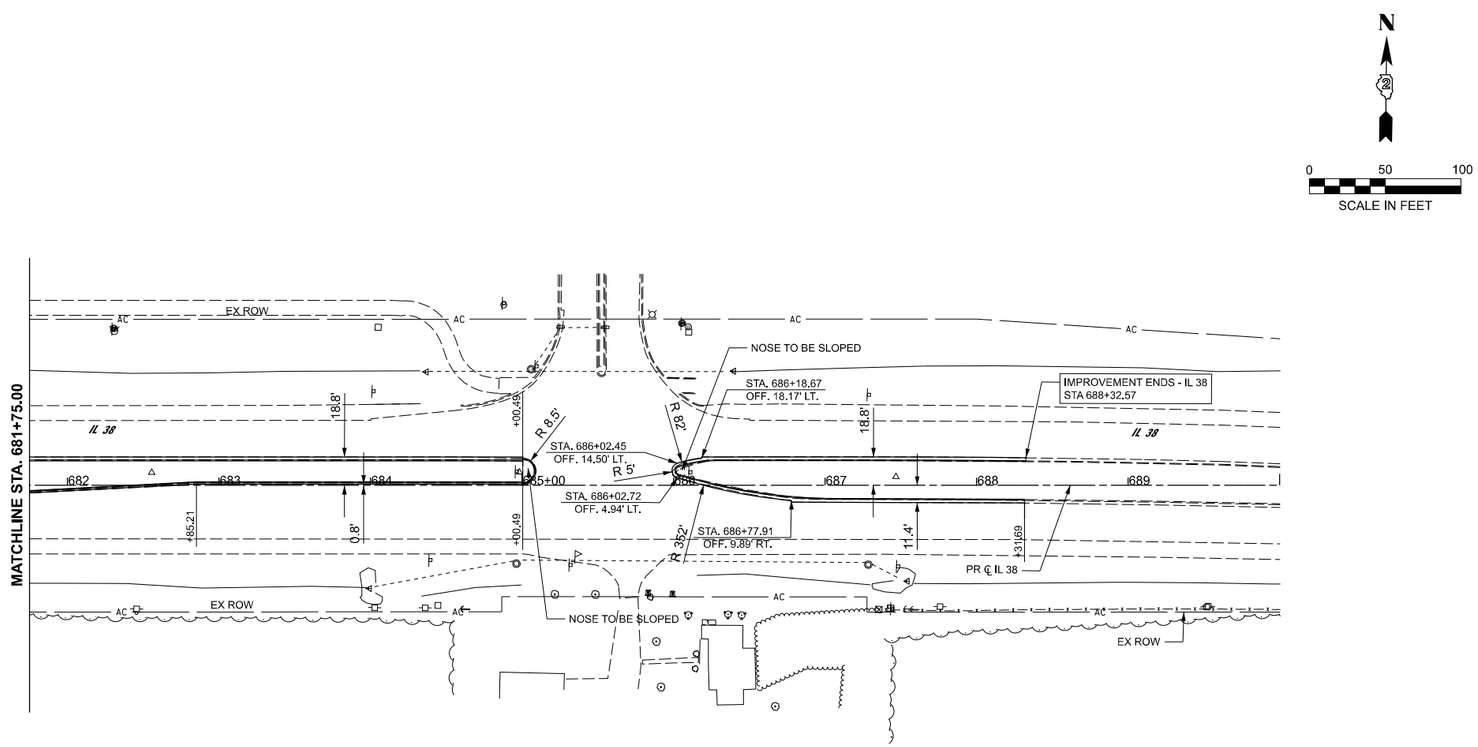

MODEL: PR_CL_38 - Plan 9 [Sheet]
FILE NAME: N:\IDOT\220628\CAD_Sheets\Civil\D284N98-sht-plan.dgn

CHRISTOPHER B. BURKE ENGINEERING, LTD. 9575 W. Higgins Road, Suite 600 Rosemont, Illinois 60018 (847) 823-0500	USER NAME = mjette	DESIGNED -	REVISED -	STATE OF ILLINOIS DEPARTMENT OF TRANSPORTATION	IL 38/I-39 INTERCHANGE IMPROVEMENTS PROPOSED PLANS	F.A.* RTE.	SECTION	COUNTY	TOTAL SHEETS	SHEET NO.
		DRAWN -	REVISED -			*	141-1HBR-3 & (9, 10) R-3	OGLE	508	70
		CHECKED -	REVISED -			CONTRACT NO. 64N98				
	PLOT DATE = 2/6/2025	DATE -	REVISED -		SCALE: 1"=50' SHEET 6 OF 8 SHEETS STA. 681+75.00 TO STA. 690+00.35	ILLINOIS FED. AID PROJECT				

*FAI ROUTE 39 (I-39) & FAP 567 (IL 38)

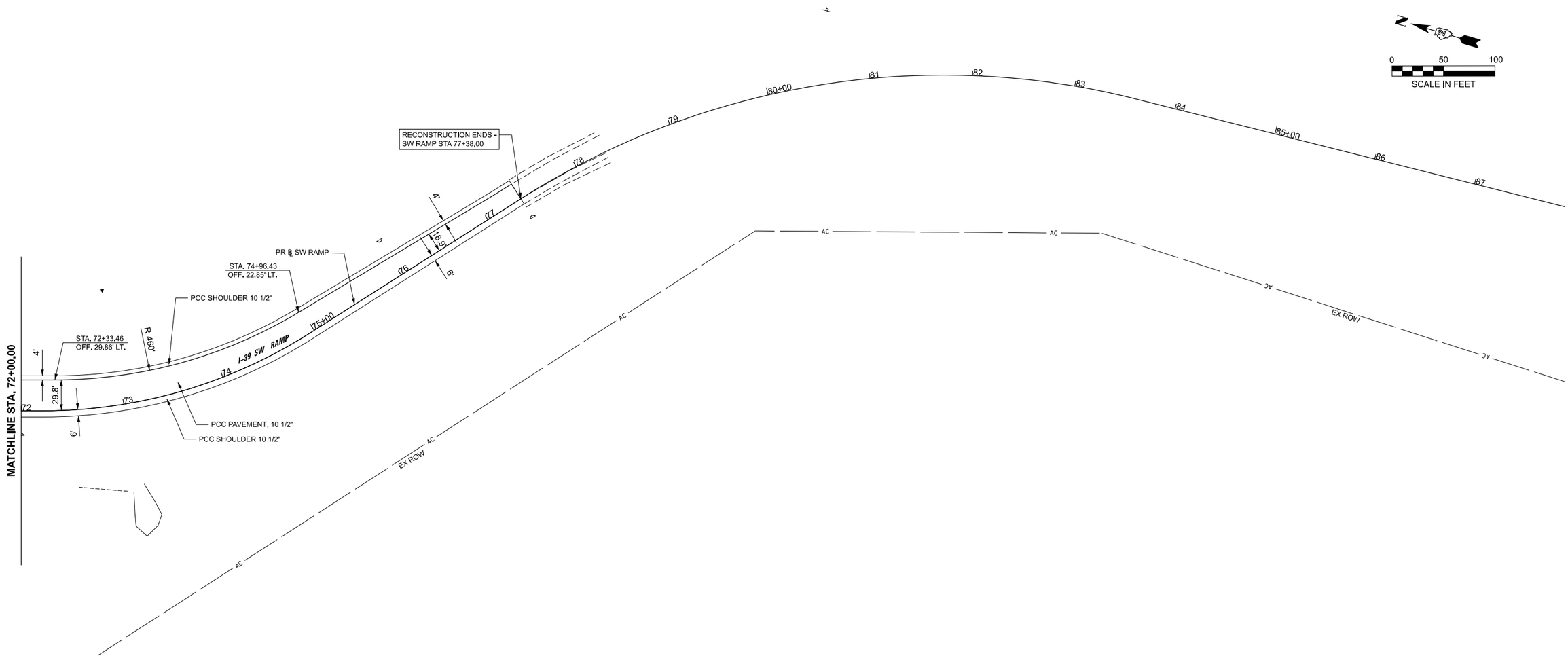

MODEL: PR_CL_38 - Plan 7 [Sheet]
FILE NAME: N:\IDOT\220628\CAD_Sheets\Civil\D264N98-sht-plan.dgn

CHRISTOPHER B. BURKE ENGINEERING, LTD.
16W19 W. Higgins Road, Suite 600
Rosemont, Illinois 60018
(847) 823-0500

USER NAME = nhowelllindgren	DESIGNED -	REVISED -	
	DRAWN -	REVISED -	
	CHECKED -	REVISED -	
PLOT DATE = 2/6/2025	DATE -	REVISED -	

STATE OF ILLINOIS
DEPARTMENT OF TRANSPORTATION

IL 38/I-39 INTERCHANGE IMPROVEMENTS
PROPOSED PLANS

SCALE: 1"=50' | SHEET 7 OF 8 SHEETS | STA. 72+00.00 TO STA. 87+90.00

F.A.* RTE.	SECTION	COUNTY	TOTAL SHEETS	SHEET NO.
*	141-1HBR-3 & (9, 10) R-3	OGLE	508	71
		CONTRACT NO. 64N98		
	ILLINOIS	FED. AID PROJECT		

*FAI ROUTE 39 (I-39) & FAP 567 (IL 38)

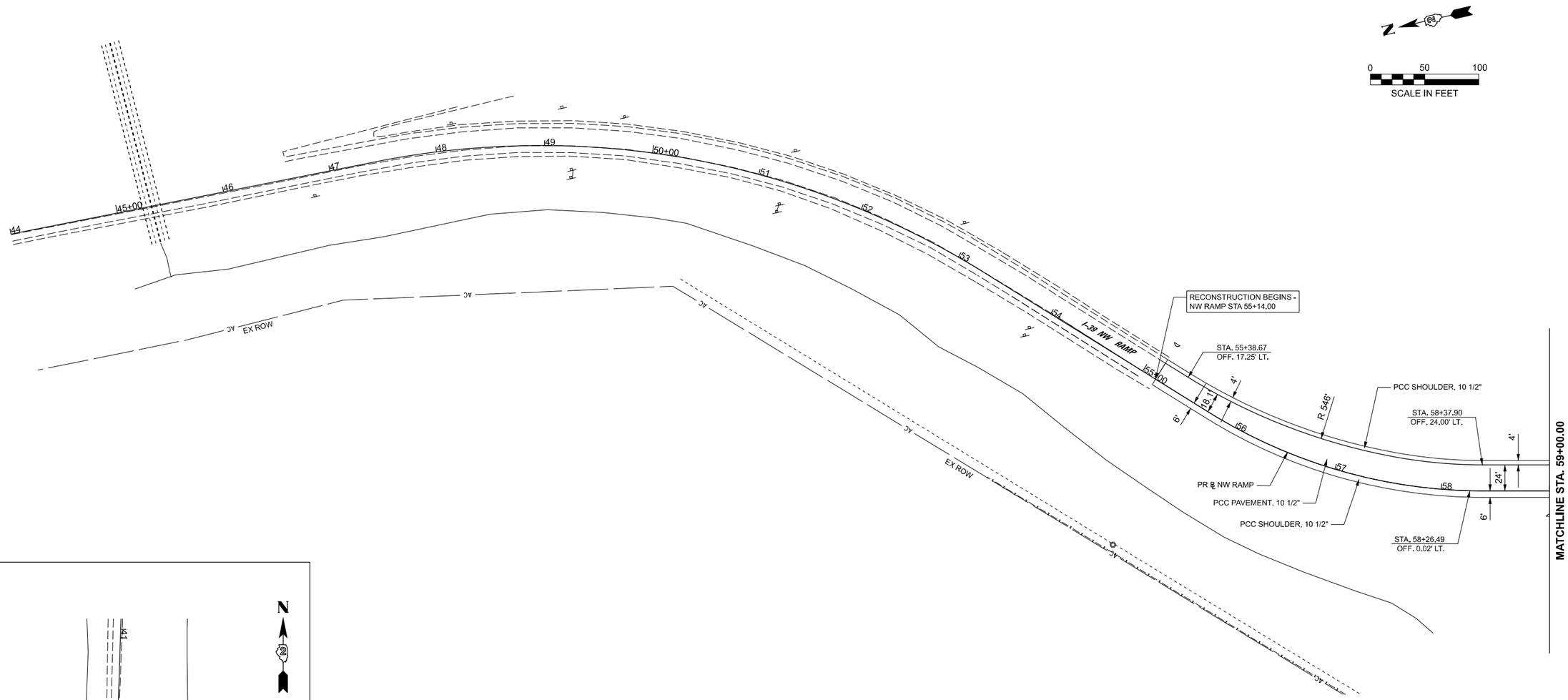

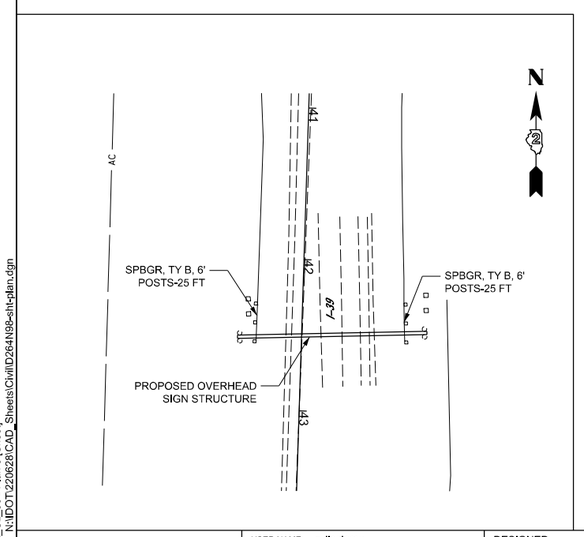

MODEL: PR_CL_38 - Plan 8 [Sheet]
FILE NAME: N:\DOT\220628\CAD_Sheets\Civil\D284N98-ilt-plan.dgn

CHRISTOPHER B. BURKE ENGINEERING, LTD. 9575 W. Higgins Road, Suite 600 Rosemont, Illinois 60018 (847) 823-0500	USER NAME = jjezierny	DESIGNED -	REVISED -	STATE OF ILLINOIS DEPARTMENT OF TRANSPORTATION	IL 38/I-39 INTERCHANGE IMPROVEMENTS PROPOSED PLANS	F.A.* RTE.	SECTION	COUNTY	TOTAL SHEETS / SHEET NO.
		DRAWN -	REVISED -			*	141-1HBR-3 & (9, 10) R-3	OGLE	508 / 72
		CHECKED -	REVISED -			CONTRACT NO. 64N98			
	PLOT DATE = 2/7/2025	DATE -	REVISED -		SCALE: 1"=50' / SHEET 8 OF 8 SHEETS / STA. 43+20.00 TO STA. 59+00.00	ILLINOIS FED. AID PROJECT			

*FAI ROUTE 39 (I-39) & FAP 567 (IL 38)

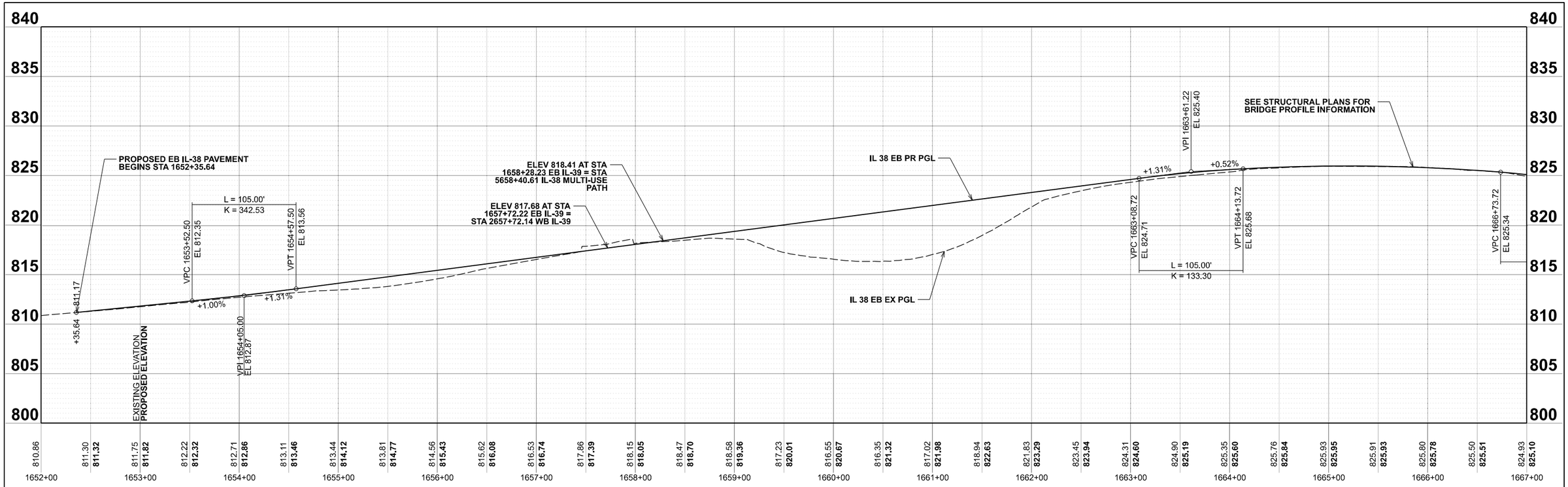

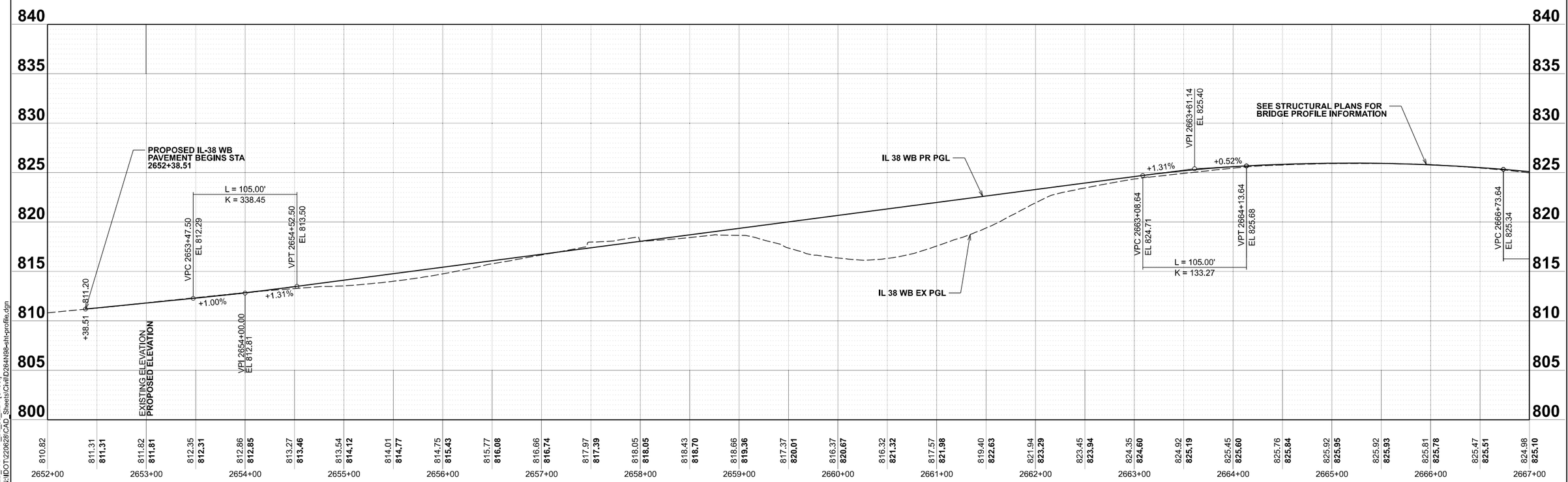

MODEL: PR_EB_PRF - PR_BL_38_EB1 [Sheet]
FILE NAME: N:\IDOT\220628\CAD_Sheets\Civil\D264N98-sht-profile.dgn

CHRISTOPHER B. BURKE ENGINEERING, LTD.
9575 W. Higgins Road, Suite 600
Rosemont, Illinois 60018
(847) 823-0500

USER NAME = nhowellilindgren	DESIGNED -	REVISED -	
	DRAWN -	REVISED -	
	CHECKED -	REVISED -	
PLOT DATE = 2/6/2025	DATE -	REVISED -	

STATE OF ILLINOIS
DEPARTMENT OF TRANSPORTATION

IL 38/I-39 INTERCHANGE IMPROVEMENTS
PROPOSED PROFILES - IL 38 EB/WB

SCALE: 1"=50' | SHEET 1 OF 5 SHEETS | STA. 1652+00.00 TO STA. 1667+00.00

F.A.* RTE.	SECTION	COUNTY	TOTAL SHEETS	SHEET NO.
*	141-1HBR-3 & (9, 10) R-3	OGLE	508	73
		CONTRACT NO. 64N98		
		ILLINOIS	FED. AID PROJECT	

*FAI ROUTE 39 (I-39) & FAP 567 (IL 38)

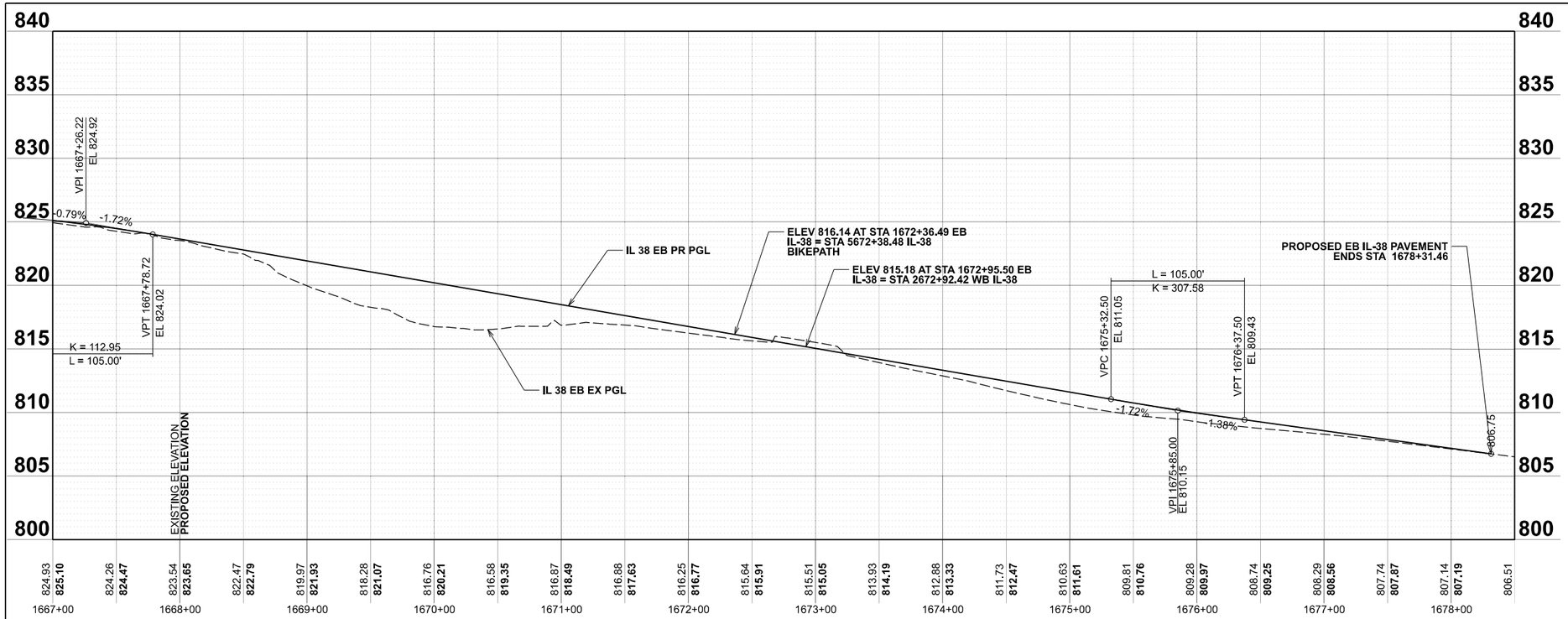

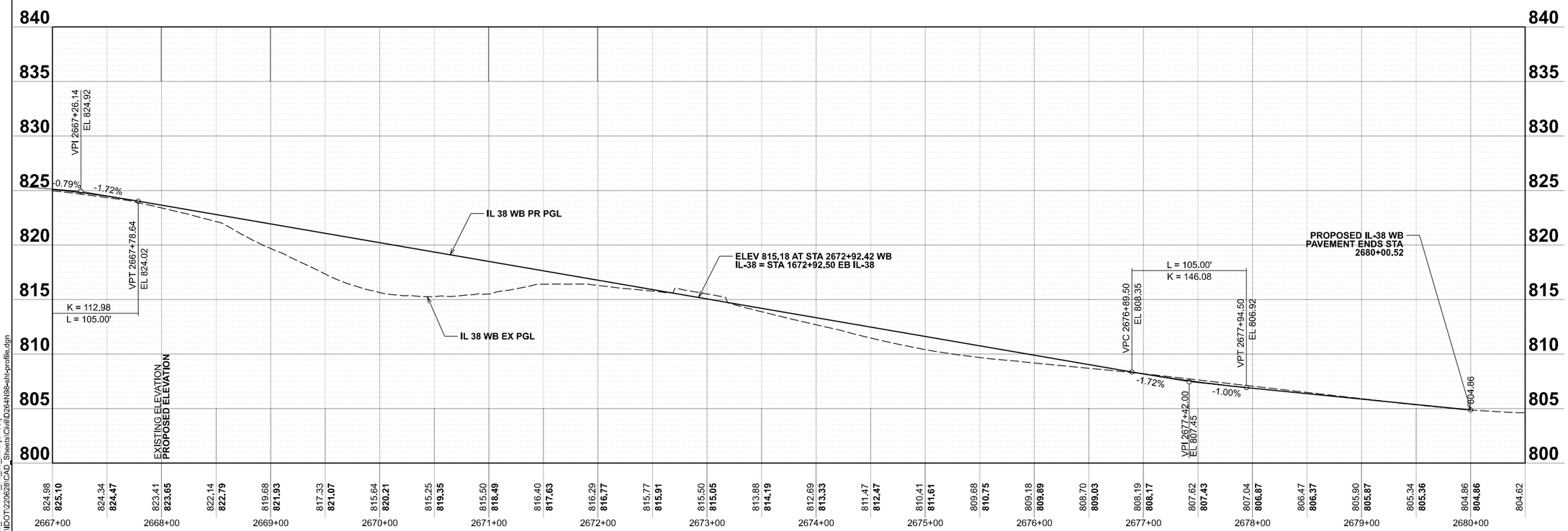

MODEL: PR_EB_PRF - PR_BL_38_EB2 [Sheet]
FILE NAME: N:\DOT\220628\CAD_Sheets\Civil\D264N98-sht-profile.dgn

CHRISTOPHER B. BURKE ENGINEERING, LTD.
9575 W. Higgins Road, Suite 600
Rosemont, Illinois 60018
(847) 823-0500

USER NAME = nhowellilindgren	DESIGNED -	REVISED -	
	DRAWN -	REVISED -	
	CHECKED -	REVISED -	
PLOT DATE = 2/6/2025	DATE -	REVISED -	

STATE OF ILLINOIS
DEPARTMENT OF TRANSPORTATION

IL 38/I-39 INTERCHANGE IMPROVEMENTS
PROPOSED PROFILES - IL 38 EB/WB

SCALE: 1"=50' | SHEET 2 OF 5 SHEETS | STA. 1667+00.00 TO STA. 1678+50.00

F.A.* RTE.	SECTION	COUNTY	TOTAL SHEETS	SHEET NO.
*	141-1HBR-3 & (9, 10) R-3	OGLE	508	74
		CONTRACT NO. 64N98		
	ILLINOIS	FED. AID PROJECT		

*FAI ROUTE 39 (I-39) & FAP 567 (IL 38)

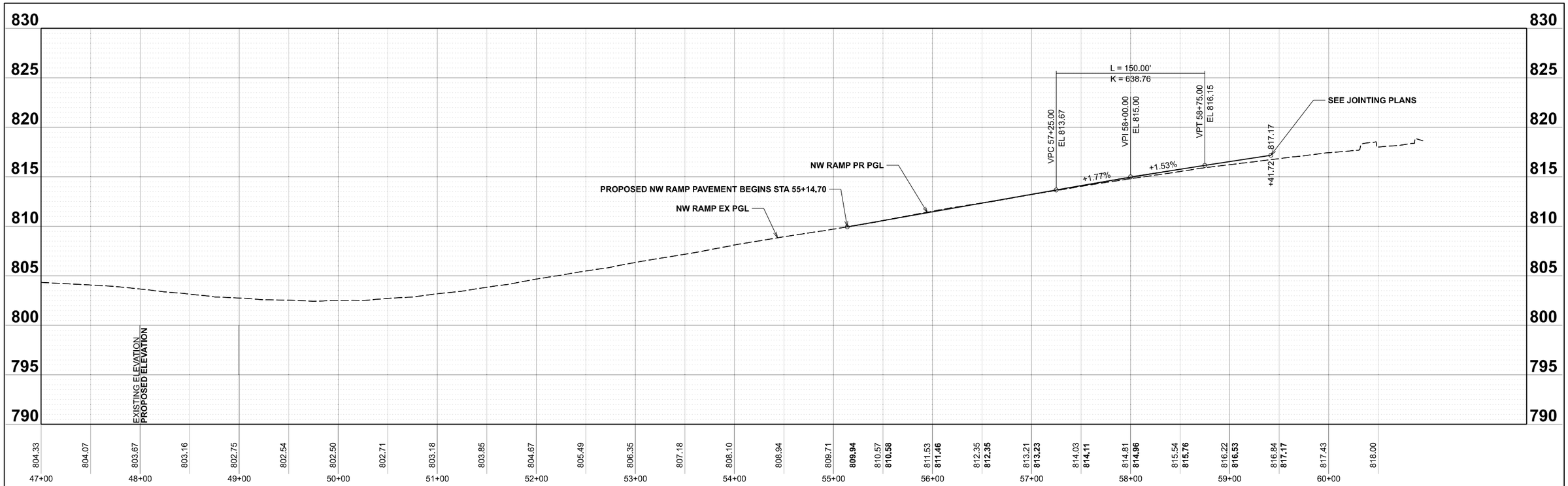

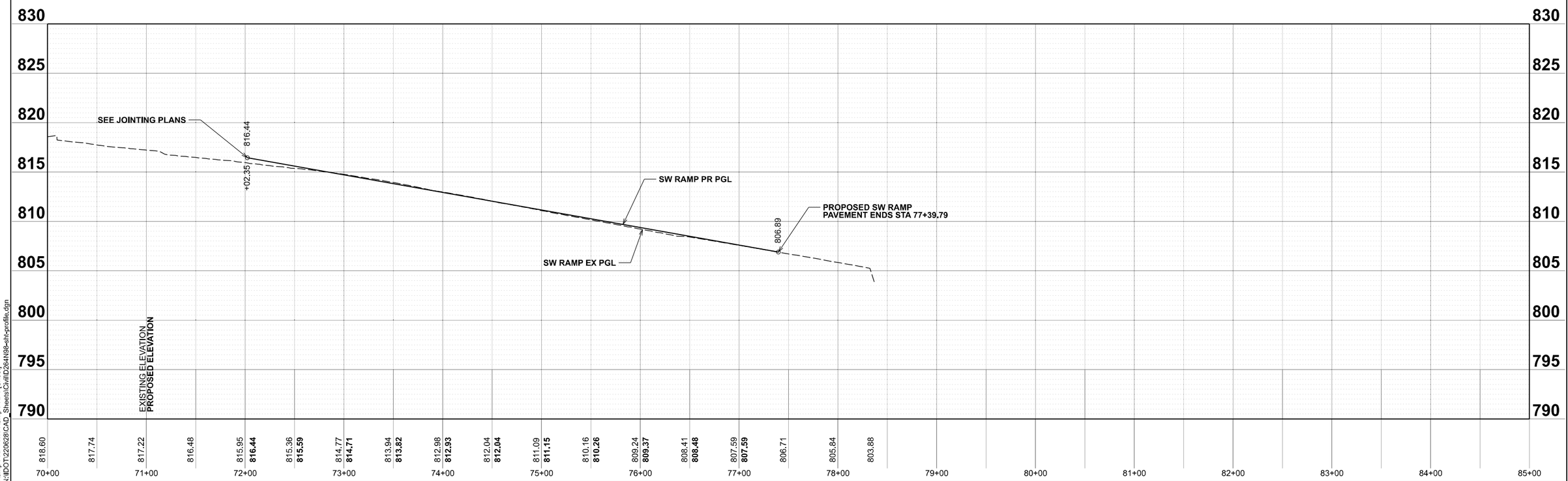

MODEL: NW Ramp PRF - NW Ramp PRF1 [Sheet]
FILE NAME: N:\IDOT\220628\CAD_Sheets\Civil\D264N98-sht-profile.dgn

CHRISTOPHER B. BURKE ENGINEERING, LTD.
9575 W. Higgins Road, Suite 600
Rosemont, Illinois 60018
(847) 823-0500

USER NAME = nhowellilindgren	DESIGNED -	REVISED -	
	DRAWN -	REVISED -	
	CHECKED -	REVISED -	
PLOT DATE = 2/6/2025	DATE -	REVISED -	

STATE OF ILLINOIS
DEPARTMENT OF TRANSPORTATION

IL 38/I-39 INTERCHANGE IMPROVEMENTS
PROPOSED PROFILES - RAMPS

SCALE: 1"=50' | SHEET 3 OF 5 SHEETS | STA. 47+00.00 TO STA. 62+00.00

F.A.* RTE.	SECTION	COUNTY	TOTAL SHEETS	SHEET NO.
*	141-1HBR-3 & (9, 10) R-3	OGLE	508	75

CONTRACT NO. 64N98

ILLINOIS | FED. AID PROJECT

*FAI ROUTE 39 (I-39) & FAP 567 (IL 38)

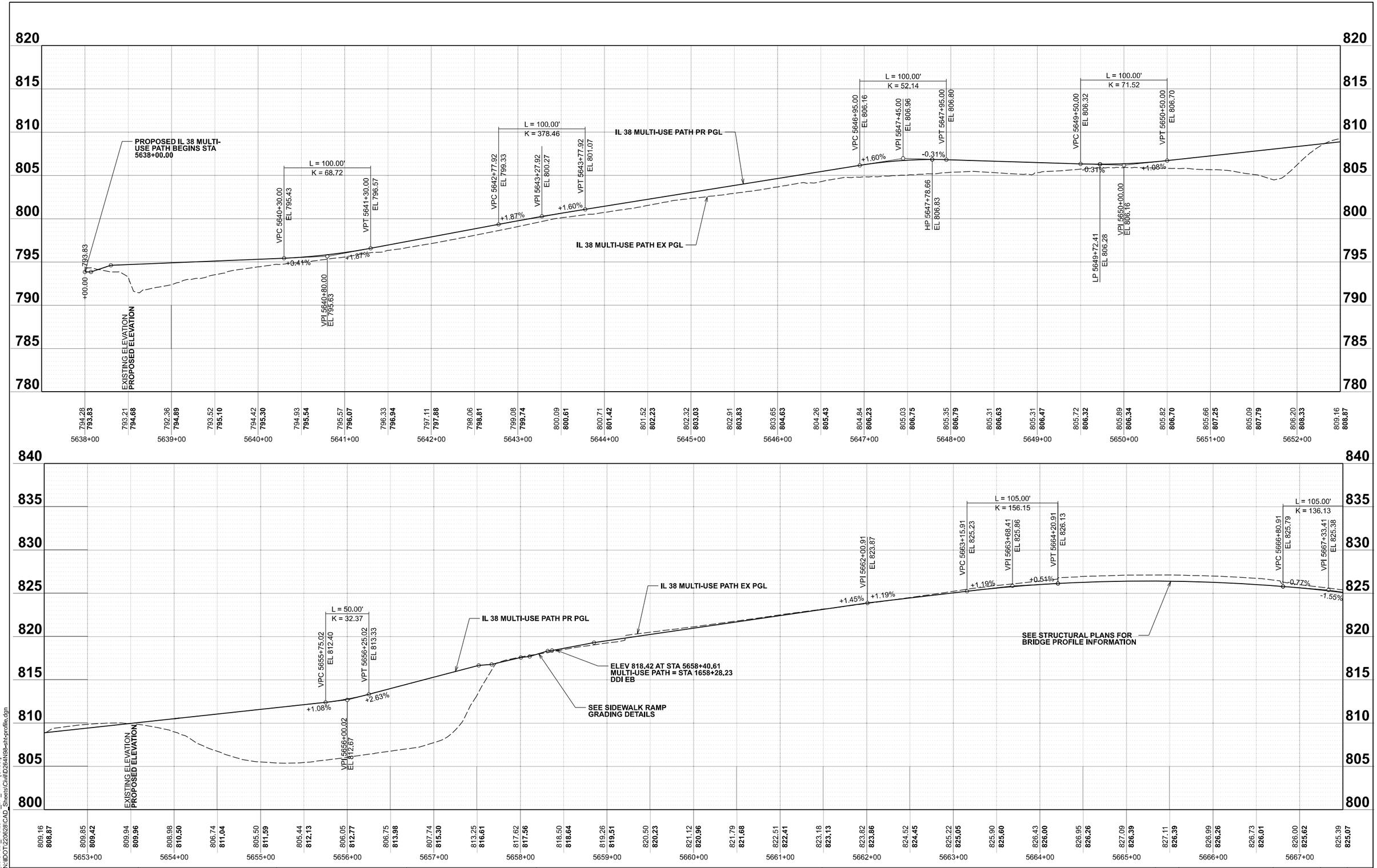

MODEL: PR_BikePath_Profile - PR_BP_PRF1 [Sheet]
FILE NAME: N:\IDOT\220628\CAD_Sheets\Civil\D264N98-sht-prof-ile.dgn

CHRISTOPHER B. BURKE ENGINEERING, LTD.
8575 W. Higgins Road, Suite 600
Rosemont, Illinois 60018
(847) 823-0500

USER NAME = nhowelllindgren	DESIGNED -	REVISED -	
	DRAWN -	REVISED -	
	CHECKED -	REVISED -	
PLOT DATE = 2/6/2025	DATE -	REVISED -	

STATE OF ILLINOIS
DEPARTMENT OF TRANSPORTATION

IL 38/I-39 INTERCHANGE IMPROVEMENTS
PROPOSED PROFILES - BIKE PATH

SCALE: 1"=50' | SHEET 4 OF 5 SHEETS | STA. 5637+50.00 TO STA. 5667+50.00

F.A.* RTE.	SECTION	COUNTY	TOTAL SHEETS	SHEET NO.
*	141-1HBR-3 & (9, 10) R-3	OGLE	508	76
		CONTRACT NO. 64N98		
		ILLINOIS	FED. AID PROJECT	

*FAI ROUTE 39 (I-39) & FAP 567 (IL 38)

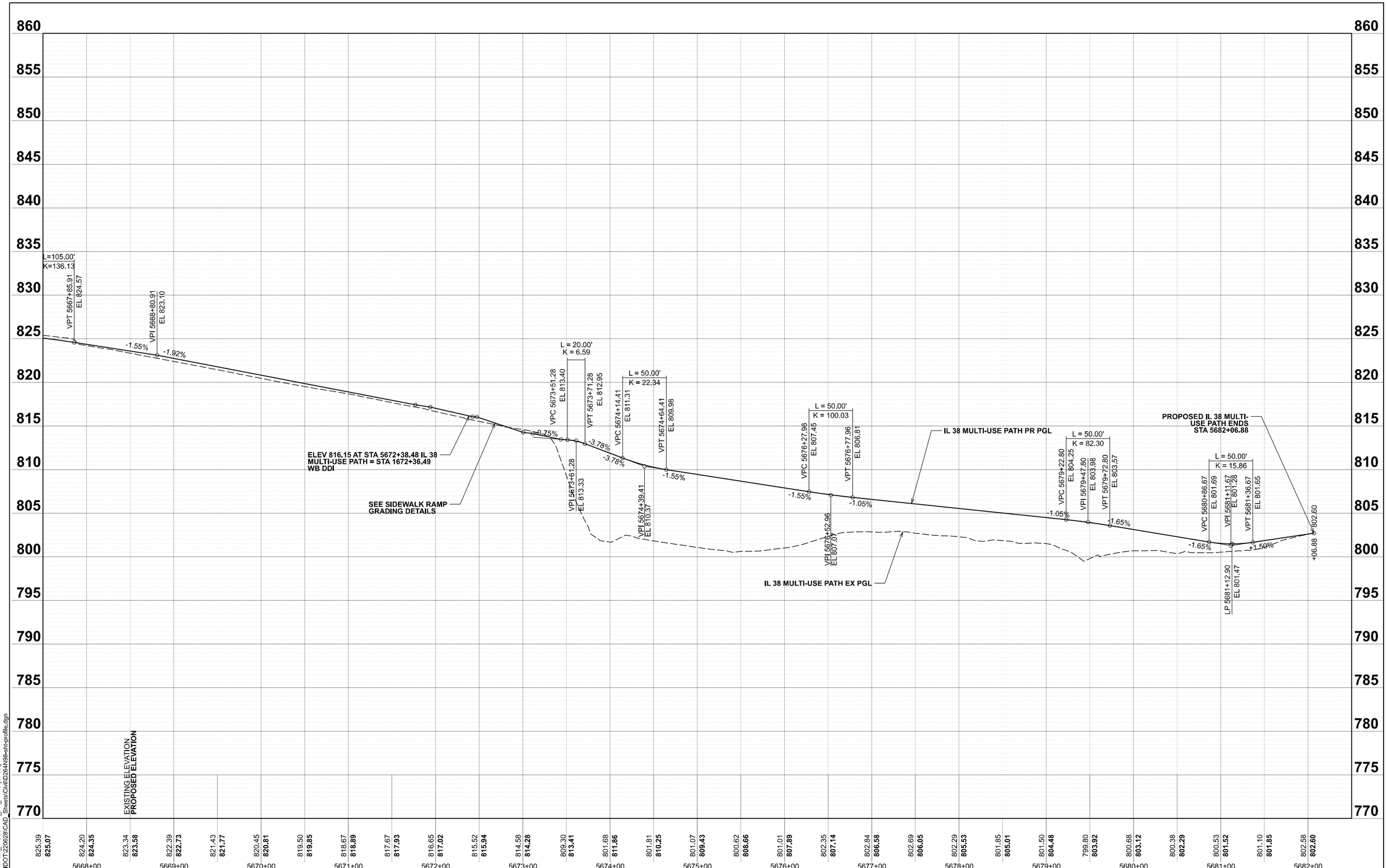

MODEL: PR_BikePath_Profile - PR_BP_PRF3 [Sheet]
FILE NAME: N:\IDOT\220628\CAD_Sheets\Civil\D264N98-sht-profile.dgn

CHRISTOPHER B. BURKE ENGINEERING, LTD.
8075 W. Higgins Road, Suite 600
Rosemont, Illinois 60018
(847) 823-0500

USER NAME = nhowelllindgren	DESIGNED -	REVISED -	
	DRAWN -	REVISED -	
	CHECKED -	REVISED -	
PLOT DATE = 2/6/2025	DATE -	REVISED -	

STATE OF ILLINOIS
DEPARTMENT OF TRANSPORTATION

IL 38/I-39 INTERCHANGE IMPROVEMENTS
PROPOSED PROFILES - BIKE PATH

SCALE: 1"=50' | SHEET 5 OF 5 SHEETS | STA. 5667+50.00 TO STA. 5682+50.00

F.A.* RTE.	SECTION	COUNTY	TOTAL SHEETS	SHEET NO.
*	141-1HBR-3 & (9, 10) R-3	OGLE	508	77

CONTRACT NO. 64N98

ILLINOIS | FED. AID PROJECT

*FAI ROUTE 39 (I-39) & FAP 567 (IL 38)

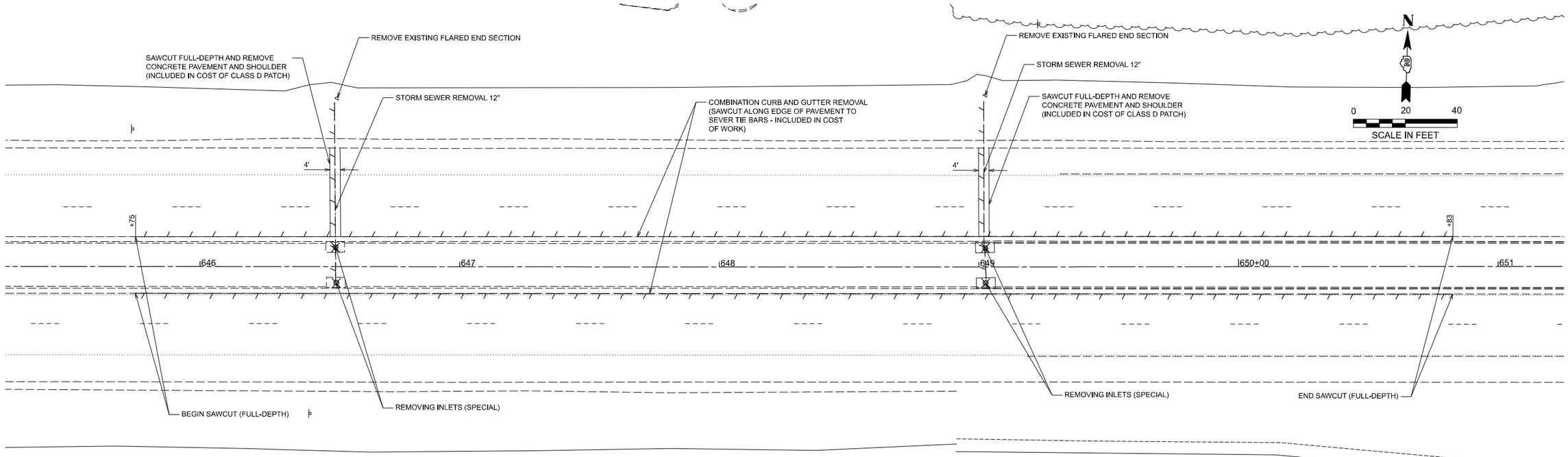

EXISTING MEDIAN REMOVAL PLAN

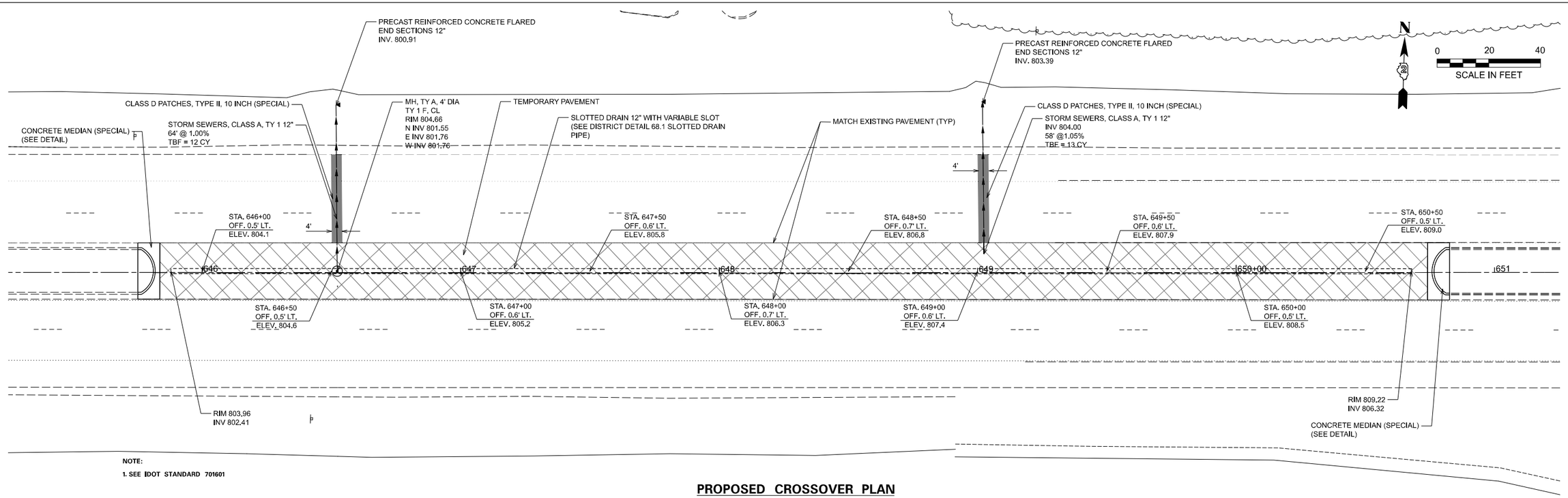

NOTE:

1. SEE IDOT STANDARD 701601

PROPOSED CROSSOVER PLAN

MODEL: Crossover - Plan 1 [Sheet]
FILE NAME: N:\IDOT\220628\CAD_Sheets\Civil\D264N98-sht-detail-crossover.dgn

CHRISTOPHER B. BURKE ENGINEERING, LTD.
9575 W. Higgins Road, Suite 600
Rosemont, Illinois 60018
(847) 823-0500

USER NAME = nhowelllindgren	DESIGNED -	REVISED -	
	DRAWN -	REVISED -	
	CHECKED -	REVISED -	
PLOT DATE = 2/6/2025	DATE -	REVISED -	

STATE OF ILLINOIS
DEPARTMENT OF TRANSPORTATION

IL 38/I-39 INTERCHANGE IMPROVEMENTS
CROSSOVER DETAILS

SCALE: 1"=20' | SHEET 1 OF 2 SHEETS | STA. 645+25.00 TO STA. 651+25.35

F.A.* RTE.	SECTION	COUNTY	TOTAL SHEETS	SHEET NO.
*	141-1HBR-3 & (9, 10) R-3	OGLE	508	78
		CONTRACT NO. 64N98		
	ILLINOIS	FED. AID PROJECT		

*FAI ROUTE 39 (I-39) & FAP 567 (IL 38)

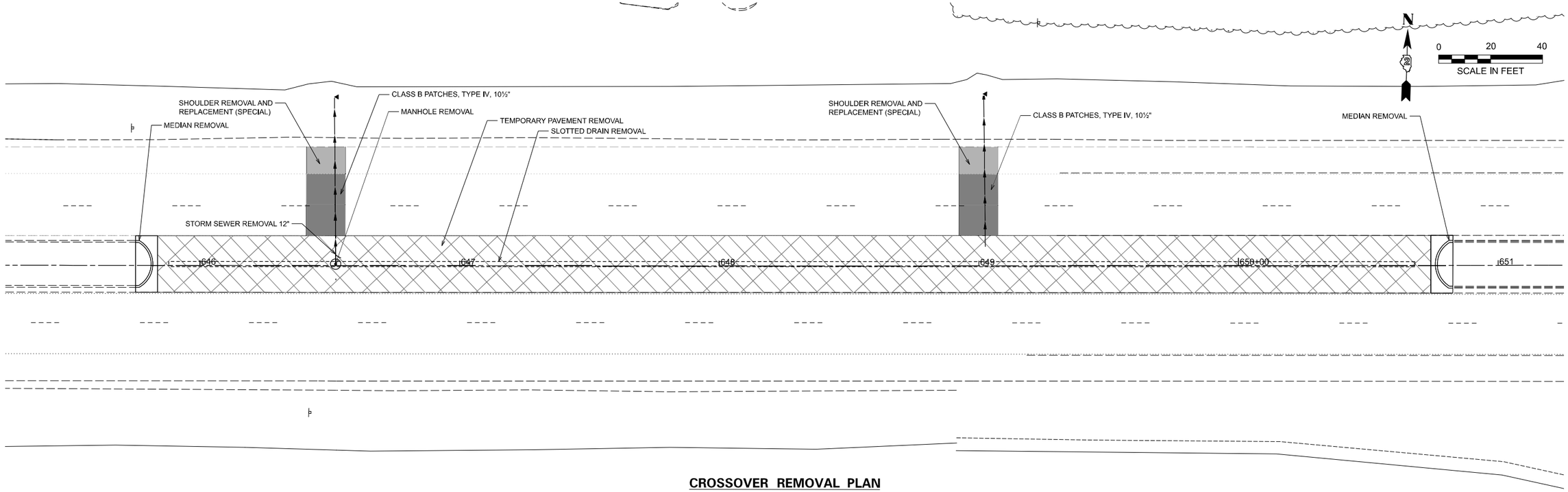

CROSSOVER REMOVAL PLAN

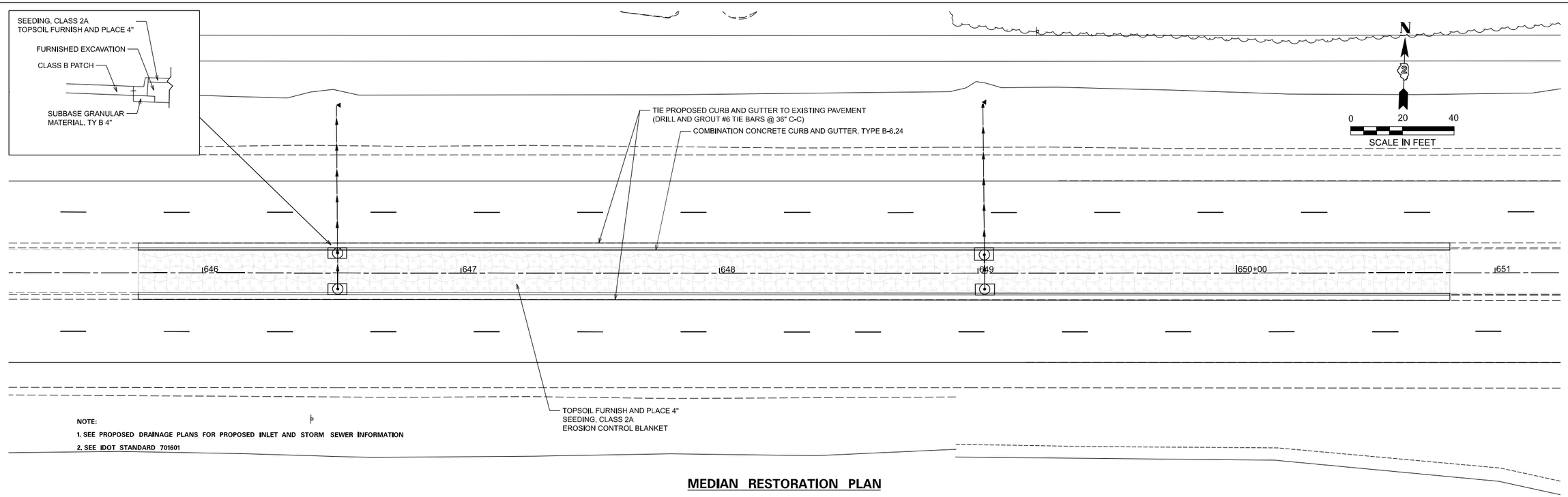

NOTE:

1. SEE PROPOSED DRAINAGE PLANS FOR PROPOSED INLET AND STORM SEWER INFORMATION
2. SEE IDOT STANDARD 701601

MEDIAN RESTORATION PLAN

MODEL: Crossover prop-1 - Plan 2 [Sheet]
FILE NAME: N:\IDOT\220628\CAD_Sheets\Civil\D264N98-sht-detail-crossover.dgn

CHRISTOPHER B. BURKE ENGINEERING, LTD.
9575 W. Higgins Road, Suite 600
Rosemont, Illinois 60018
(847) 823-0500

USER NAME = nhowelllindgren	DESIGNED -	REVISED -	
	DRAWN -	REVISED -	
	CHECKED -	REVISED -	
PLOT DATE = 2/5/2025	DATE -	REVISED -	

STATE OF ILLINOIS
DEPARTMENT OF TRANSPORTATION

IL 38/I-39 INTERCHANGE IMPROVEMENTS
CROSSOVER DETAILS

SCALE: 1"=20' | SHEET 2 OF 2 SHEETS | STA. 645+25.00 TO STA. 651+25.35

F.A.* RTE.	SECTION	COUNTY	TOTAL SHEETS	SHEET NO.
*	141-1HBR-3 & (9, 10) R-3	OGLE	508	79
		CONTRACT NO. 64N98		
	ILLINOIS	FED. AID PROJECT		

*FAI ROUTE 39 (I-39) & FAP 567 (IL 38)

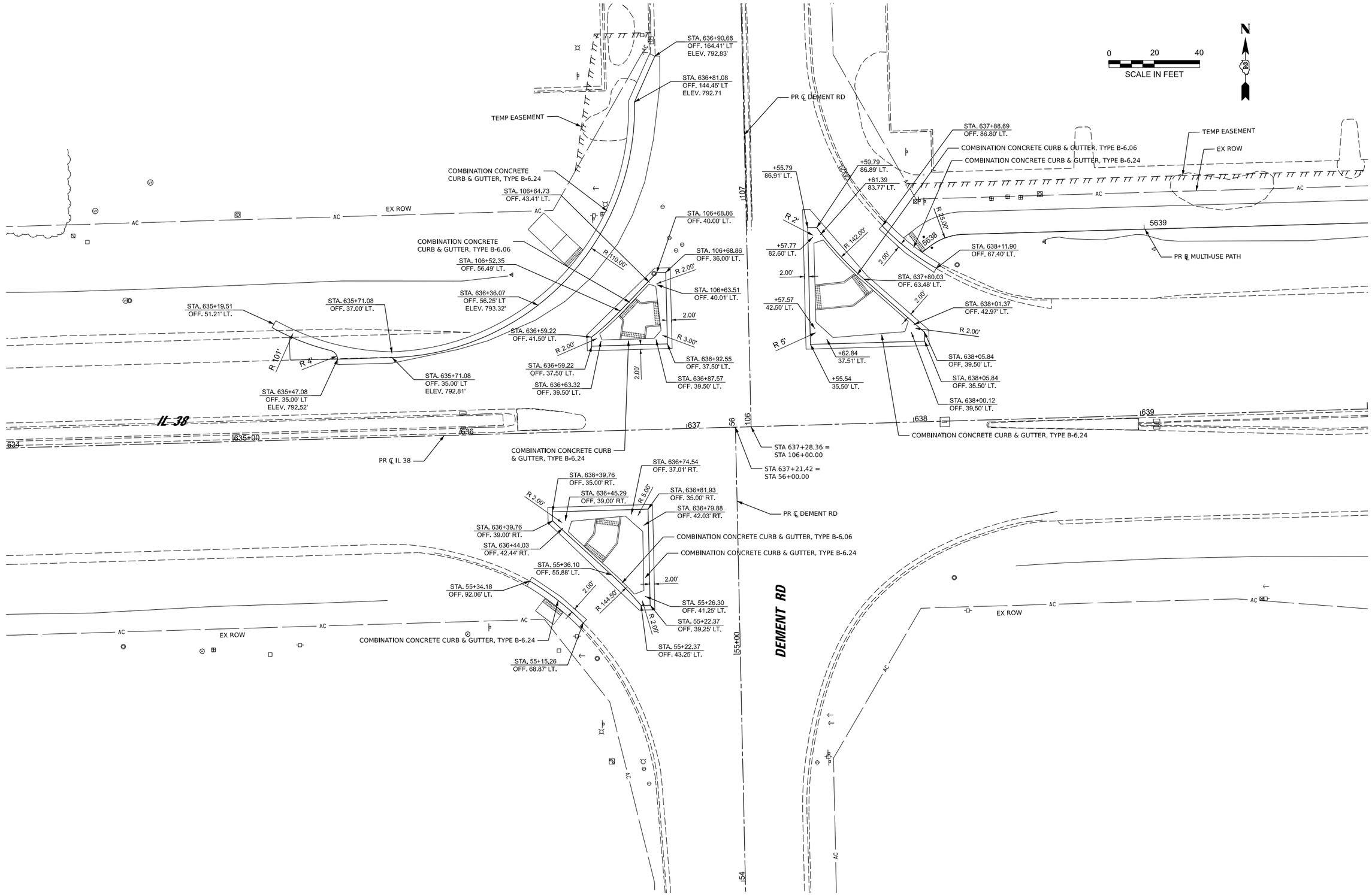

MODEL: Geometric Layout - Plan 1 [Sheet]
FILE NAME: N:\IDOT\220628\CAD_Sheets\Civil\D264N98-sht-GEOM.dgn

CHRISTOPHER B. BURKE ENGINEERING, LTD.
8575 W. Higgins Road, Suite 600
Rosemont, Illinois 60018
(847) 823-0500

USER NAME = nhowelllindgren	DESIGNED -	REVISED -	
	DRAWN -	REVISED -	
	CHECKED -	REVISED -	
PLOT DATE = 2/6/2025	DATE -	REVISED -	

STATE OF ILLINOIS
DEPARTMENT OF TRANSPORTATION

IL 38/I-39 INTERCHANGE IMPROVEMENTS
GEOMETRIC LAYOUT DETAILS

SCALE: 1"=20' | SHEET 1 OF 3 SHEETS | STA. 634+00.00 TO STA. 640+00.25

F.A.* RTE.	SECTION	COUNTY	TOTAL SHEETS	SHEET NO.
*	141-1HBR-3 & (9, 10) R-3	OGLE	508	80

CONTRACT NO. 64N98

ILLINOIS | FED. AID PROJECT

*FAI ROUTE 39 (I-39) & FAP 567 (IL 38)

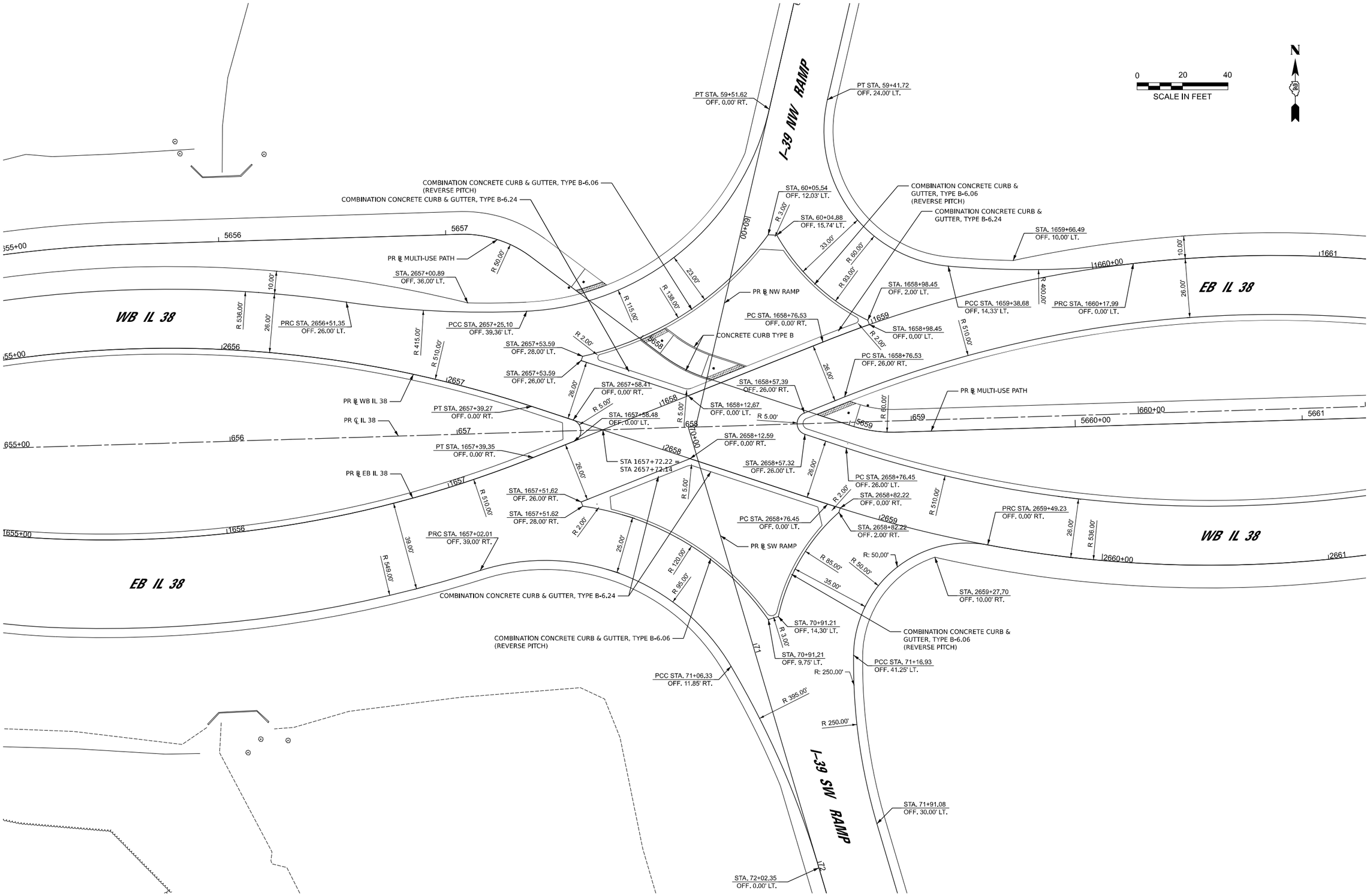

MODEL: Geometric Layout - Plan 2 [Sheet]
FILE NAME: N:\IDOT\220628\CAD_Sheets\Civil\D264N98-sht-GEOM.dgn

CHRISTOPHER B. BURKE ENGINEERING, LTD.
8575 W. Higgins Road, Suite 600
Rosemont, Illinois 60018
(847) 823-0500

USER NAME = nhowellllindgren	DESIGNED -	REVISED -	
	DRAWN -	REVISED -	
	CHECKED -	REVISED -	
PLOT DATE = 2/6/2025	DATE -	REVISED -	

STATE OF ILLINOIS
DEPARTMENT OF TRANSPORTATION

IL 38/I-39 INTERCHANGE IMPROVEMENTS
GEOMETRIC LAYOUT DETAILS

SCALE: 1"=20' | SHEET 2 OF 3 SHEETS | STA. 655+00.00 TO STA. 661+00.28

F.A.* RTE.	SECTION	COUNTY	TOTAL SHEETS	SHEET NO.
*	141-1HBR-3 & (9, 10) R-3	OGLE	508	81
		CONTRACT NO. 64N98		
	ILLINOIS	FED. AID PROJECT		

*FAI ROUTE 39 (I-39) & FAP 567 (IL 38)

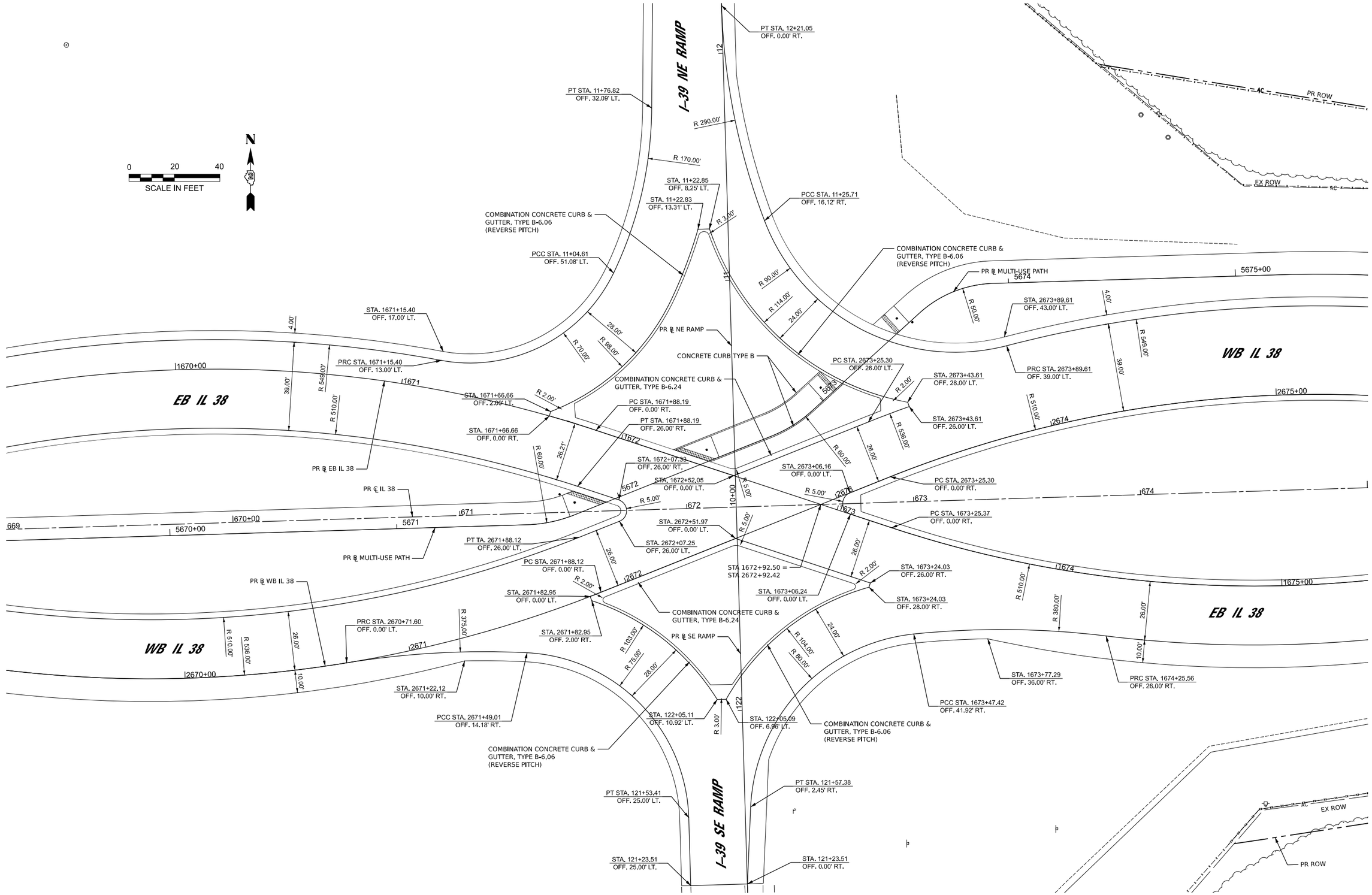

MODEL: Geometric Layout - Plan 3 [Sheet]
FILE NAME: N:\IDOT\220628\CAD_Sheets\Civil\D264N98-sht-GEOM.dgn

CHRISTOPHER B. BURKE ENGINEERING, LTD.
8575 W. Higgins Road, Suite 600
Rosemont, Illinois 60018
(847) 823-0500

USER NAME = nhowelllindgren	DESIGNED -	REVISED -	
	DRAWN -	REVISED -	
	CHECKED -	REVISED -	
PLOT DATE = 2/5/2025	DATE -	REVISED -	

STATE OF ILLINOIS
DEPARTMENT OF TRANSPORTATION

IL 38/I-39 INTERCHANGE IMPROVEMENTS
GEOMETRIC LAYOUT DETAILS

SCALE: 1"=20' | SHEET 3 OF 3 SHEETS | STA. 669+00.00 TO STA. 675+00.28

F.A.* RTE.	SECTION	COUNTY	TOTAL SHEETS	SHEET NO.
*	141-1HBR-3 & (9, 10) R-3	OGLE	508	82
		CONTRACT NO. 64N98		
	ILLINOIS	FED. AID PROJECT		

*FAI ROUTE 39 (I-39) & FAP 567 (IL 38)

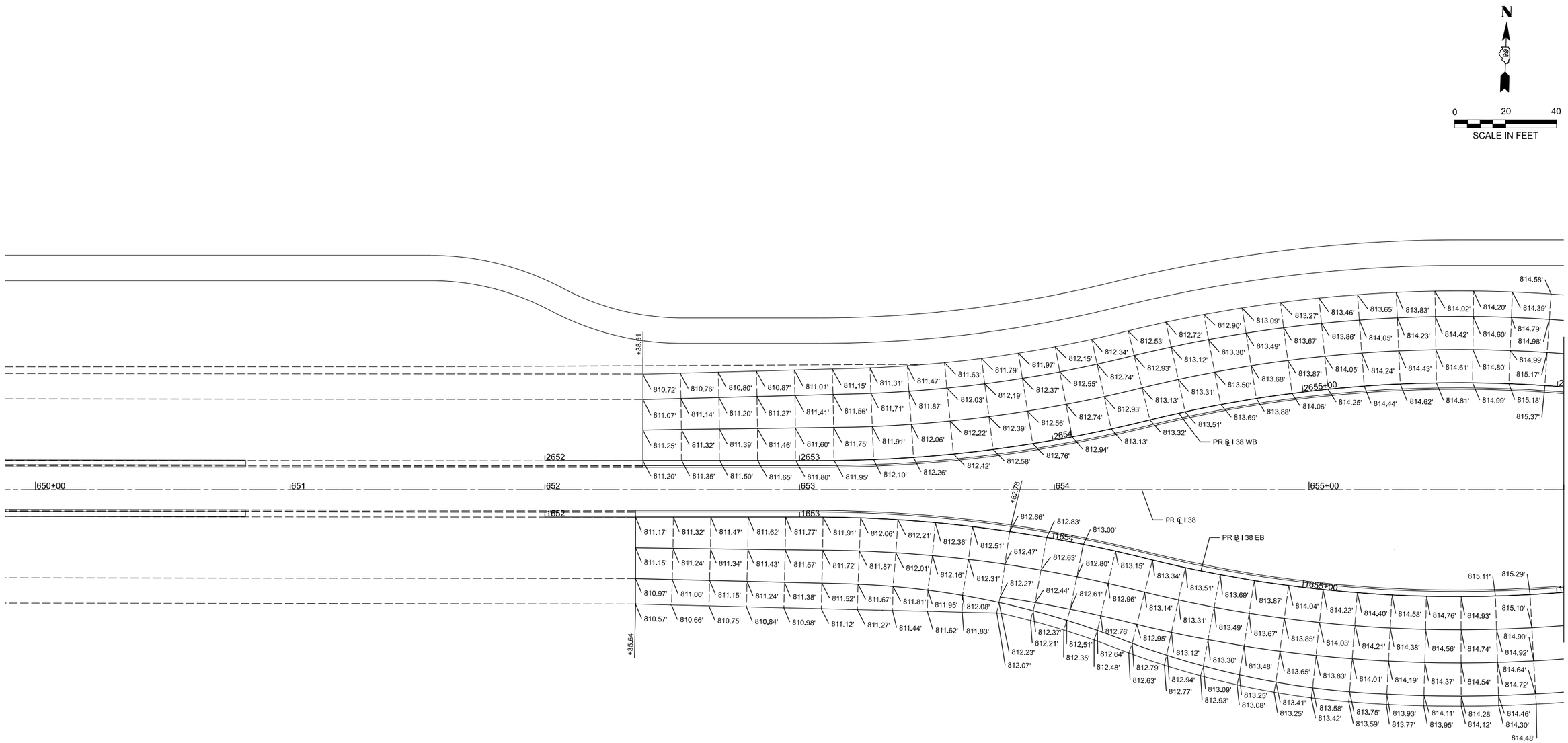

JOINTING LEGEND

————	SAWED LONGITUDINAL JOINT
– – – – –	TRANSVERSE JOINT
- - - - - - - - -	CONSTRUCTION JOINT

MODEL: PR_CL_38 - Joint 1 [Sheet]
FILE NAME: N:\IDOT\220628\CAD_Sheets\Civil\D2664N98-sht-pvtjoint.dgn

CHRISTOPHER B. BURKE ENGINEERING, LTD.
9575 W. Higgins Road, Suite 600
Rosemont, Illinois 60018
(847) 823-0500

USER NAME = nhowelllindgren	DESIGNED -	REVISED -	
	DRAWN -	REVISED -	
	CHECKED -	REVISED -	
PLOT DATE = 2/6/2025	DATE -	REVISED -	

STATE OF ILLINOIS
DEPARTMENT OF TRANSPORTATION

IL 38/I-39 INTERCHANGE IMPROVEMENTS
PAVEMENT JOINTING DETAILS

SCALE: 1"=20' | SHEET 1 OF 6 SHEETS | STA. 649+88.00 TO STA. 656+00.00

F.A.* RTE.	SECTION	COUNTY	TOTAL SHEETS	SHEET NO.
*	141-1HBR-3 & (9, 10) R-3	OGLE	508	83

CONTRACT NO. 64N98

ILLINOIS | FED. AID PROJECT

*FAI ROUTE 39 (I-39) & FAP 567 (IL 38)

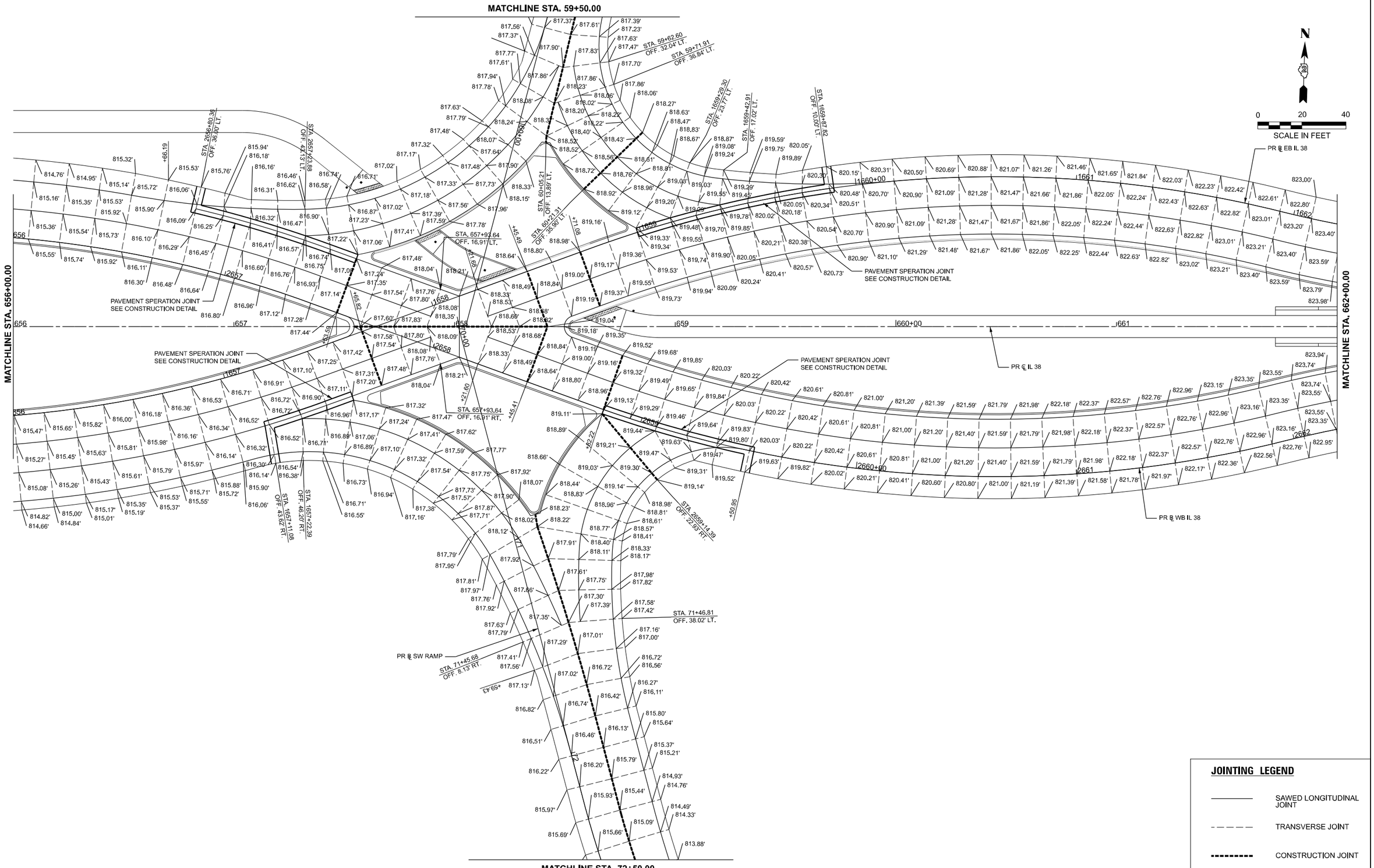

JOINTING LEGEND

————	SAWED LONGITUDINAL JOINT
– – – – –	TRANSVERSE JOINT
----------	CONSTRUCTION JOINT

MODEL: PR_CL_38 - Joint 2 [Sheet]
FILE NAME: N:\IDOT\220628\CAD_Sheets\Civil\D264N98-sht-pvtjoint.dgn

CHRISTOPHER B. BURKE ENGINEERING, LTD.
9575 W. Higgins Road, Suite 600
Rosemont, Illinois 60018
(847) 823-0500

USER NAME = amissick	DESIGNED -	REVISED -	
	DRAWN -	REVISED -	
	CHECKED -	REVISED -	
PLOT DATE = 2/6/2025	DATE -	REVISED -	

STATE OF ILLINOIS
DEPARTMENT OF TRANSPORTATION

IL 38/I-39 INTERCHANGE IMPROVEMENTS
PAVEMENT JOINTING DETAILS

SCALE: 1"=20' | SHEET 2 OF 6 SHEETS | STA. 656+00.00 TO STA. 662+00.00

F.A.* RTE.	SECTION	COUNTY	TOTAL SHEETS	SHEET NO.
*	141-1HBR-3 & (9, 10) R-3	OGLE	508	84
		CONTRACT NO. 64N98		
		ILLINOIS	FED. AID PROJECT	

*FAI ROUTE 39 (I-39) & FAP 567 (IL 38)

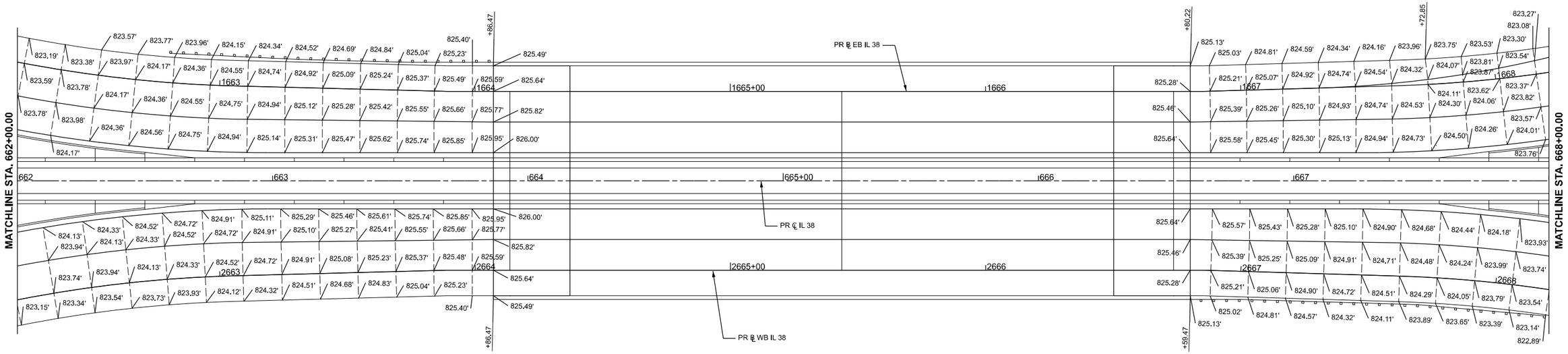

JOINTING LEGEND

————	SAWED LONGITUDINAL JOINT
– – – – –	TRANSVERSE JOINT
----------	CONSTRUCTION JOINT

MODEL: PR_CL_38 - Joint 3 [Sheet]
FILE NAME: N:\IDOT\220628\CAD_Sheets\Civil\D264N98-sht-pvtjoint.dgn

CHRISTOPHER B. BURKE ENGINEERING, LTD.
9575 W. Higgins Road, Suite 600
Rosemont, Illinois 60018
(847) 823-0500

USER NAME = nhowelllindgren	DESIGNED -	REVISED -	
	DRAWN -	REVISED -	
	CHECKED -	REVISED -	
PLOT DATE = 3/14/2025	DATE -	REVISED -	

STATE OF ILLINOIS
DEPARTMENT OF TRANSPORTATION

IL 38/I-39 INTERCHANGE IMPROVEMENTS
PAVEMENT JOINTING DETAILS

SCALE: 1"=20' | SHEET 3 OF 6 SHEETS | STA. 662+00.00 TO STA. 668+00.00

F.A.* RTE.	SECTION	COUNTY	TOTAL SHEETS	SHEET NO.
*	141-1HBR-3 & (9, 10) R-3	OGLE	508	85
		CONTRACT NO. 64N98		
		ILLINOIS	FED. AID PROJECT	

*FAI ROUTE 39 (I-39) & FAP 567 (IL 38)

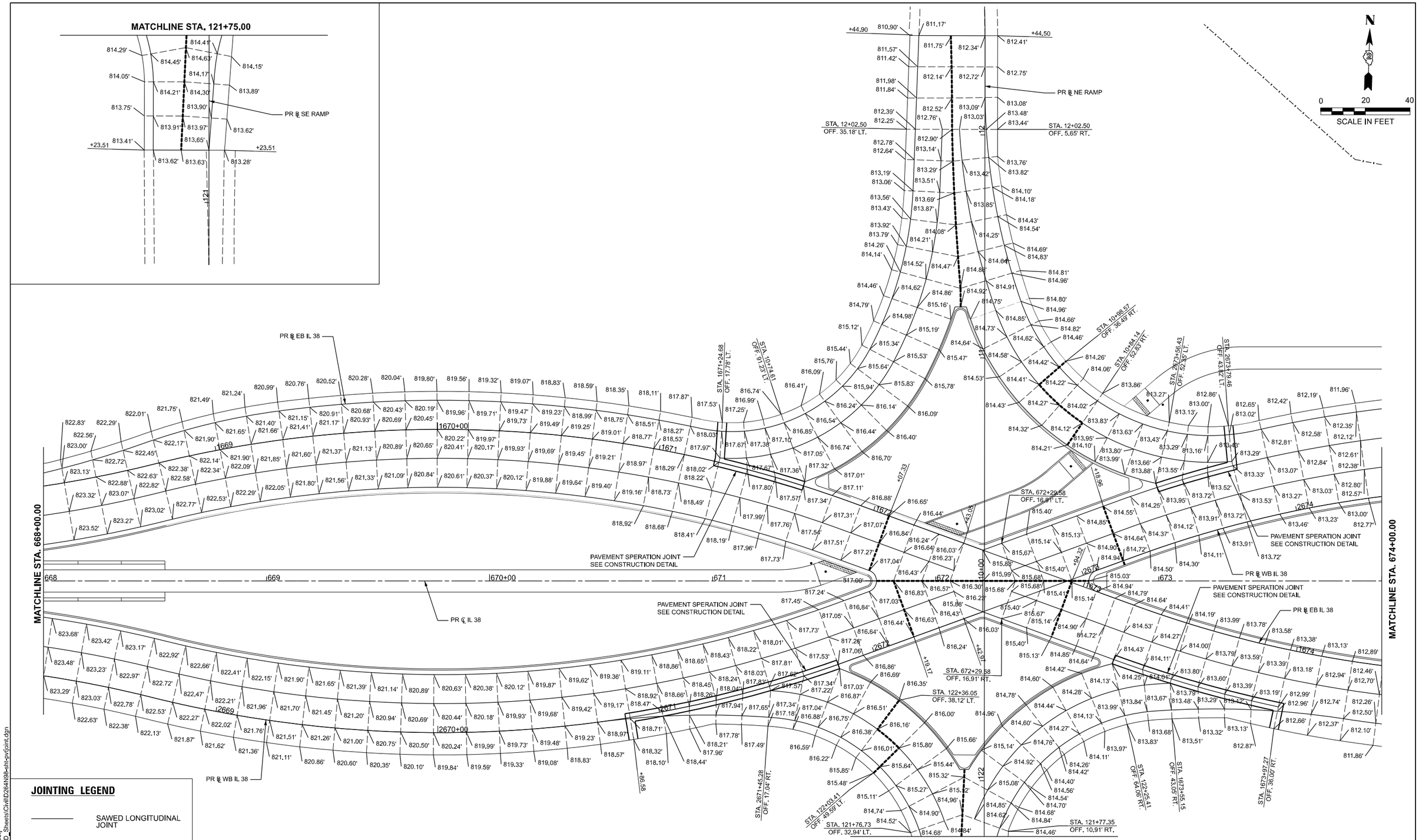

JOINTING LEGEND

- SAWED LONGITUDINAL JOINT
- TRANSVERSE JOINT
- CONSTRUCTION JOINT

MODEL: PR_CL_38 - Joint 4 [Sheet]
FILE NAME: N:\IDOT\220628\CAD_Sheets\Civil\D264N98-sht-pvtjoint.dgn

CHRISTOPHER B. BURKE ENGINEERING, LTD.
9575 W. Higgins Road, Suite 600
Rosemont, Illinois 60018
(847) 823-0500

USER NAME = nhowelllindgren	DESIGNED -	REVISED -	
	DRAWN -	REVISED -	
	CHECKED -	REVISED -	
PLOT DATE = 2/6/2025	DATE -	REVISED -	

STATE OF ILLINOIS
DEPARTMENT OF TRANSPORTATION

IL 38/I-39 INTERCHANGE IMPROVEMENTS
PAVEMENT JOINTING DETAILS

SCALE: 1"=20' | SHEET 4 OF 6 SHEETS | STA. 668+00.00 TO STA. 674+00.00

F.A.* RTE.	SECTION	COUNTY	TOTAL SHEETS	SHEET NO.
*	141-1HBR-3 & (9, 10) R-3	OGLE	508	86
		CONTRACT NO. 64N98		
	ILLINOIS	FED. AID PROJECT		

*FAI ROUTE 39 (I-39) & FAP 567 (IL 38)

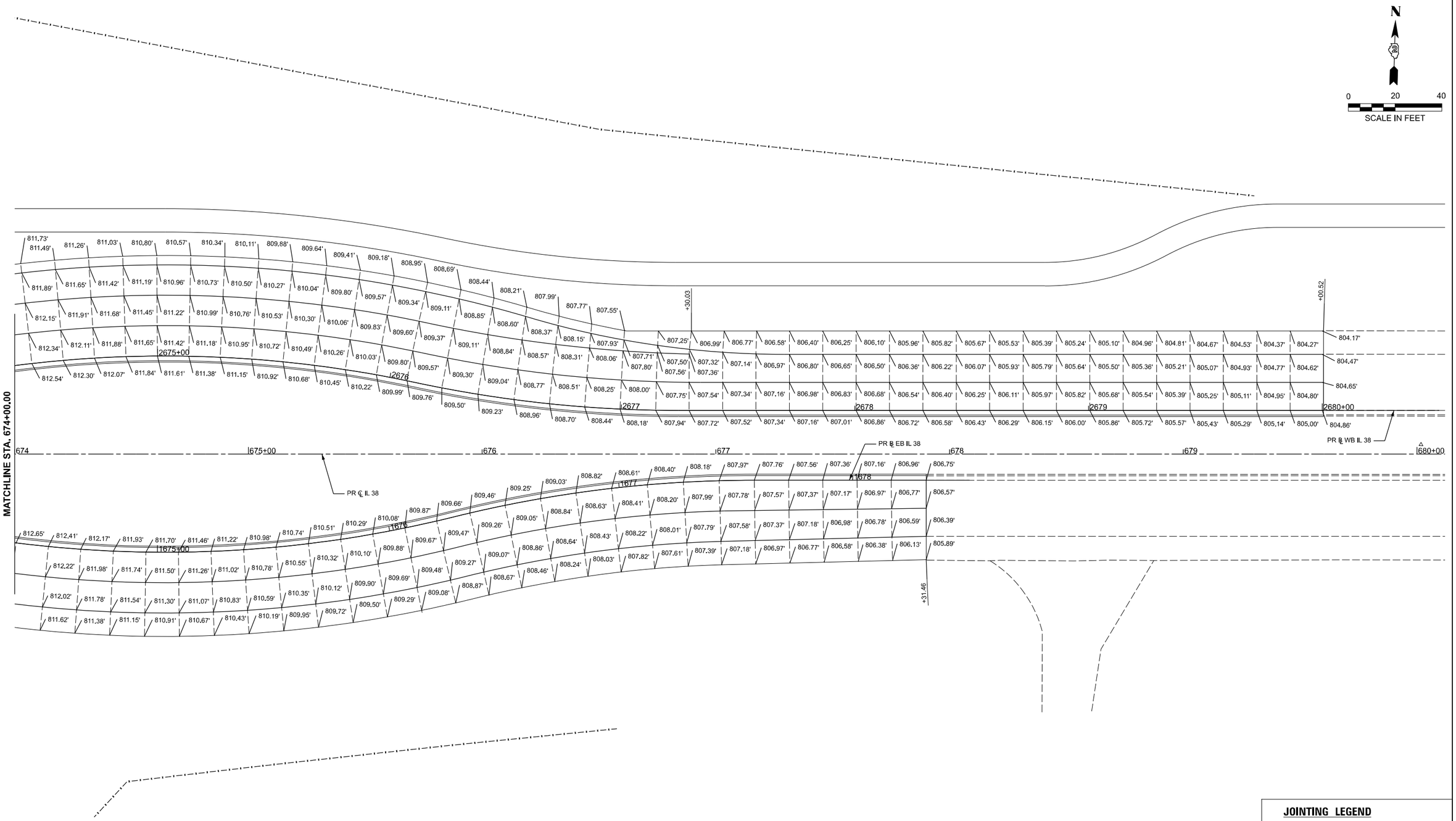

JOINTING LEGEND

————	SAWED LONGITUDINAL JOINT
– – – –	TRANSVERSE JOINT
- - - - - - - -	CONSTRUCTION JOINT

MODEL: PR_CL_38 - Joint 5 [Sheet]
FILE NAME: N:\IDOT\220628\CAD_Sheets\Civil\D264N98-sht-pvtjoint.dgn

CHRISTOPHER B. BURKE ENGINEERING, LTD.
9575 W. Higgins Road, Suite 600
Rosemont, Illinois 60018
(847) 823-0500

USER NAME = nhowelllindgren	DESIGNED -	REVISED -	
	DRAWN -	REVISED -	
	CHECKED -	REVISED -	
PLOT DATE = 2/6/2025	DATE -	REVISED -	

STATE OF ILLINOIS
DEPARTMENT OF TRANSPORTATION

IL 38/I-39 INTERCHANGE IMPROVEMENTS
PAVEMENT JOINTING DETAILS

SCALE: 1"=20' | SHEET 5 OF 6 SHEETS | STA. 674+00.00 TO STA. 680+12.00

F.A.* RTE.	SECTION	COUNTY	TOTAL SHEETS	SHEET NO.
*	141-1HBR-3 & (9, 10) R-3	OGLE	508	87
		CONTRACT NO. 64N98		
	ILLINOIS	FED. AID PROJECT		

*FAI ROUTE 39 (I-39) & FAP 567 (IL 38)

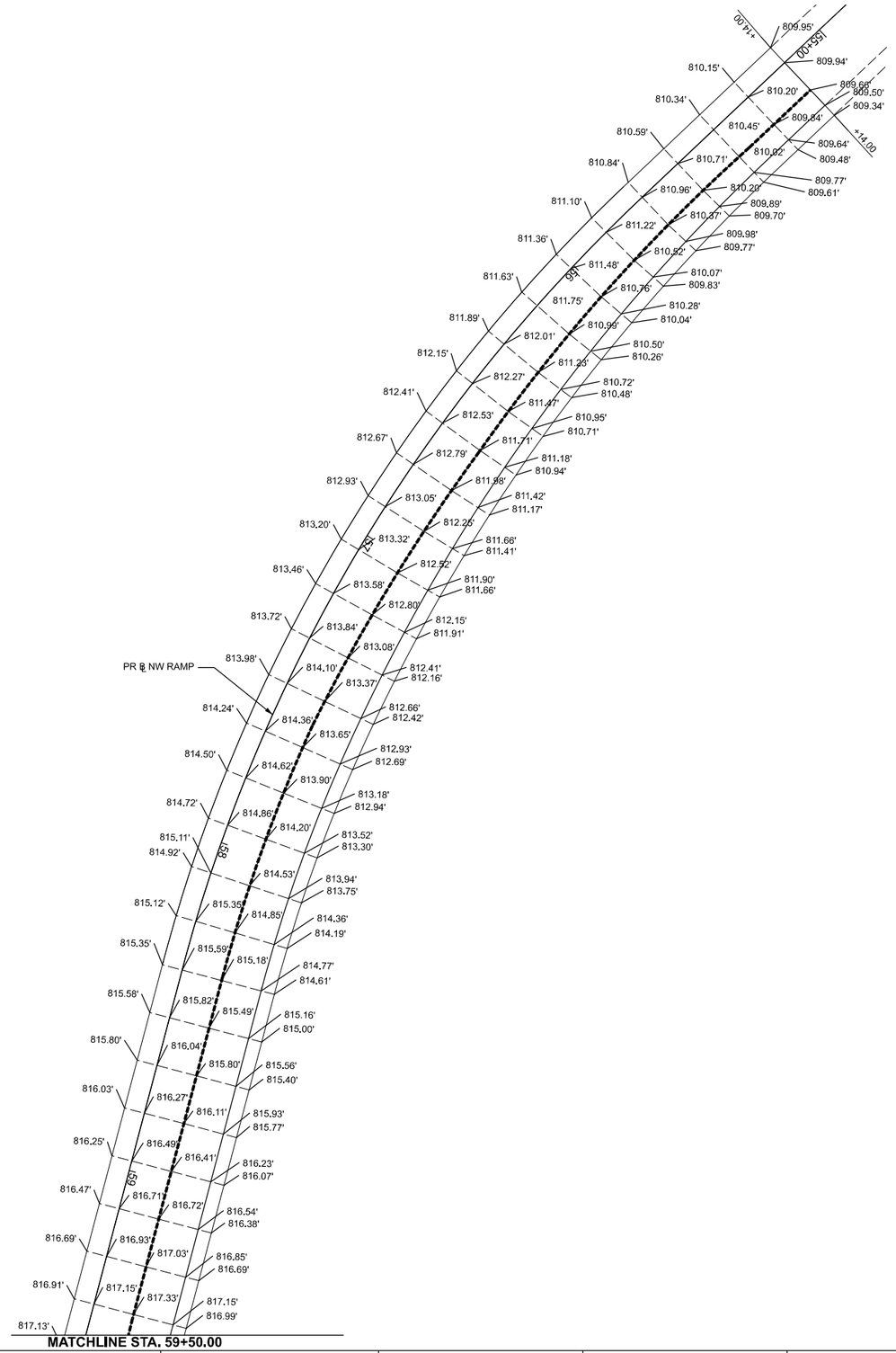

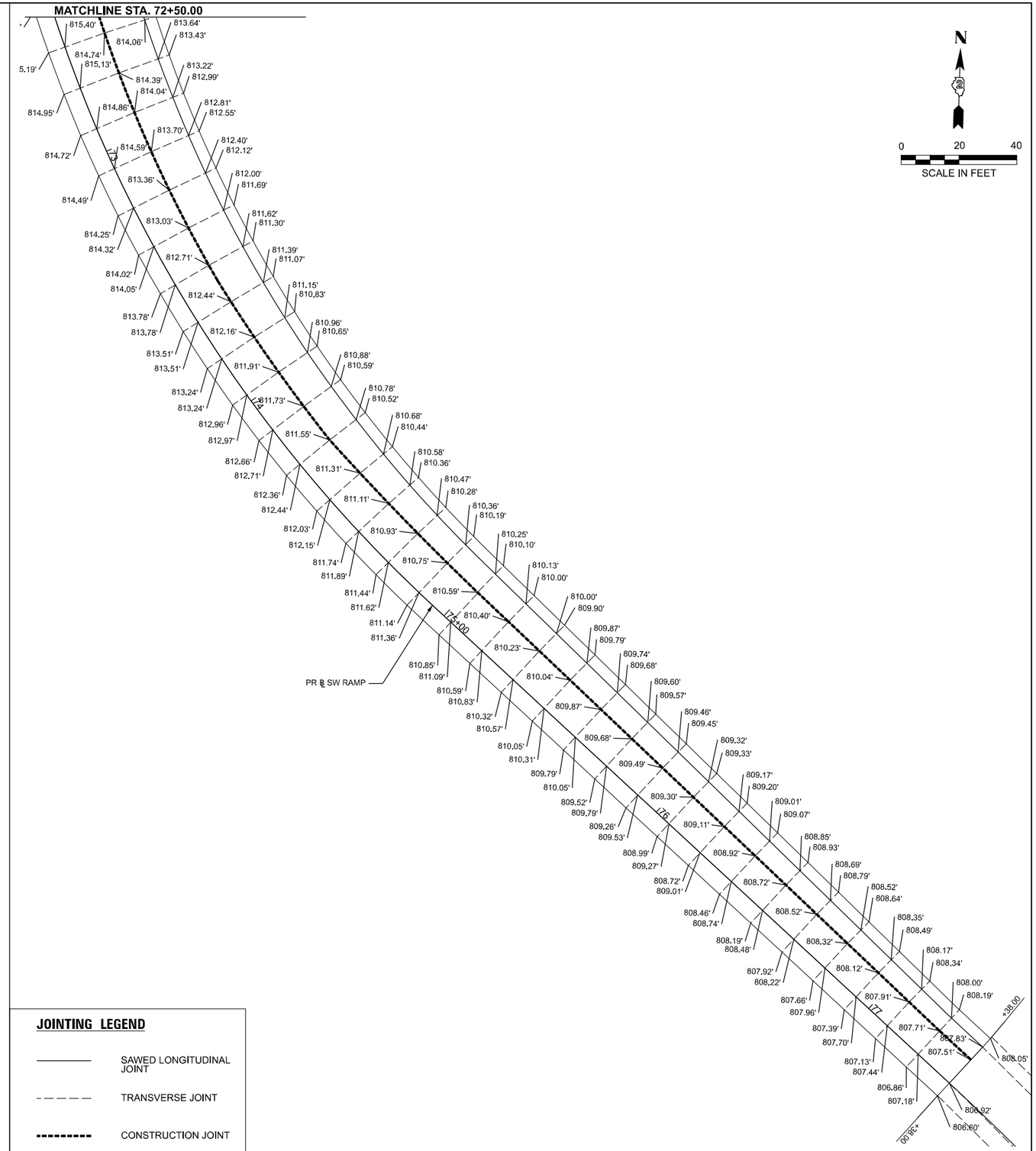

JOINTING LEGEND

————	SAWED LONGITUDINAL JOINT
– – – –	TRANSVERSE JOINT
----------	CONSTRUCTION JOINT

MODEL: PR_CL_38 - Joint 8 [Sheet]
FILE NAME: N:\IDOT\220628\CAD_Sheets\Civil\D264N98-sht-pvtjoint.dgn

CHRISTOPHER B. BURKE ENGINEERING, LTD.
9575 W. Higgins Road, Suite 600
Rosemont, Illinois 60018
(847) 823-0500

USER NAME = nhowellilindgren	DESIGNED -	REVISED -	
	DRAWN -	REVISED -	
	CHECKED -	REVISED -	
PLOT DATE = 2/6/2025	DATE -	REVISED -	

STATE OF ILLINOIS
DEPARTMENT OF TRANSPORTATION

IL 38/I-39 INTERCHANGE IMPROVEMENTS
PAVEMENT JOINTING DETAILS

SCALE: 1"=20' | SHEET 6 OF 6 SHEETS | STA. | TO STA.

F.A.* RTE.	SECTION	COUNTY	TOTAL SHEETS	SHEET NO.
*	141-1HBR-3 & (9, 10) R-3	OGLE	508	88
		CONTRACT NO. 64N98		
	ILLINOIS	FED. AID PROJECT		

*FAI ROUTE 39 (I-39) & FAP 567 (IL 38)

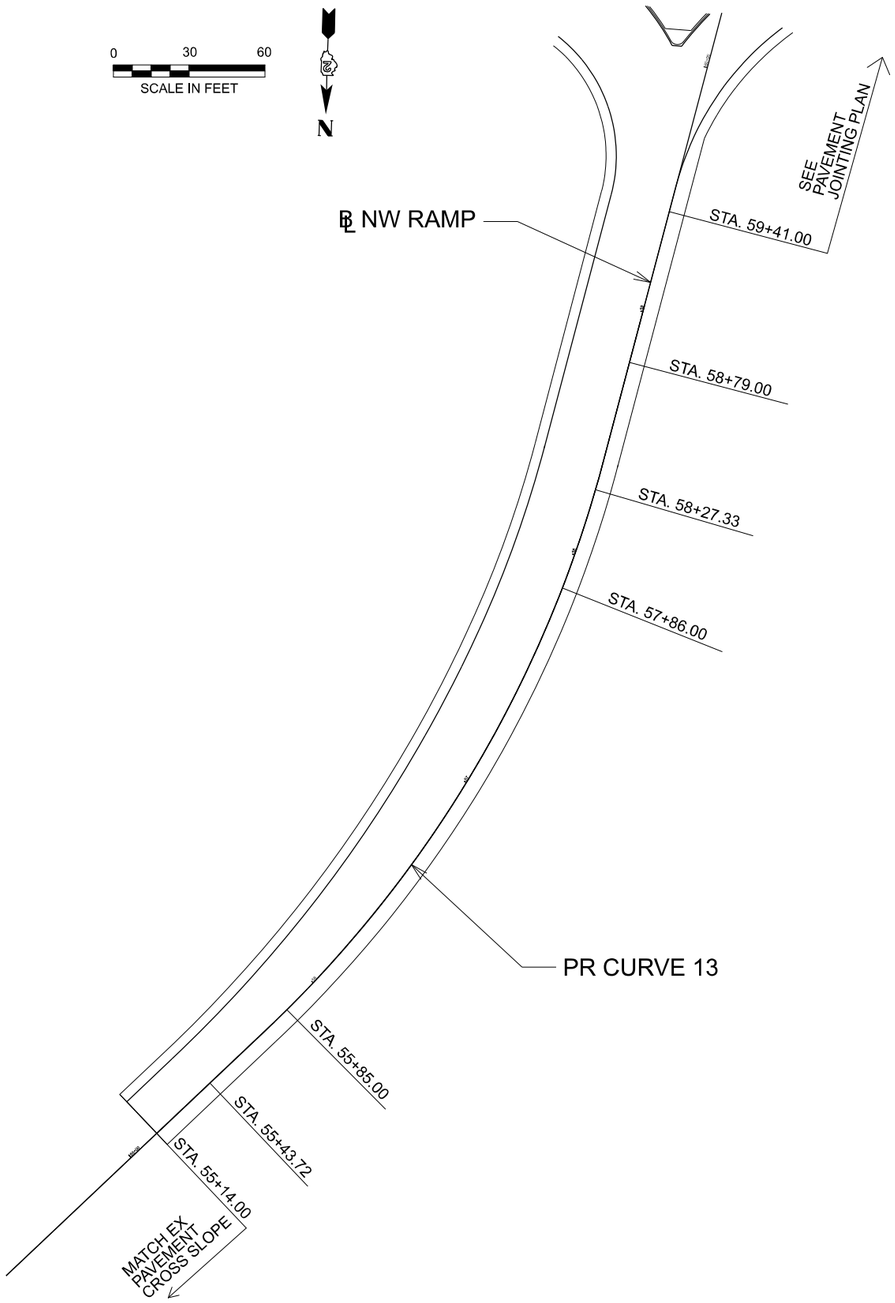

PR CURVE 13
PI STA = 57+09.54
Δ = 31°49'37" (LT)
D = 11°59'12"
R = 478.00'
T = 136.28'
L = 265.52'
E = 19.05'
PC STA = 55+73.26
PT STA = 58+38.78

STATION	SHLD WIDTH	LT LANE WIDTH	ELEVATIONS AT LOCATIONS					RT LANE WIDTH	SHLD WIDTH
			A	B	C	D	E		
59+41.00	4	12	817.00	817.16	817.34	817.16	816.92	12	6
58+79.00	4	12	815.69	815.85	816.03	816.21	815.97	12	6
58+27.33	4	12	814.28	814.44	814.92	815.40	815.16	12	6
57+86.00	4	12	813.04	813.28	814.00	814.72	814.60	12	6
55+85.00	4	9.5	809.82	810.06	810.64	811.20	811.08	9.5	6
55+43.72	4	9	809.62	809.78	810.14	810.47	810.35	9	6
55+14.00	4	8.6	809.34	809.50	809.72	809.94	809.95	8.6	6

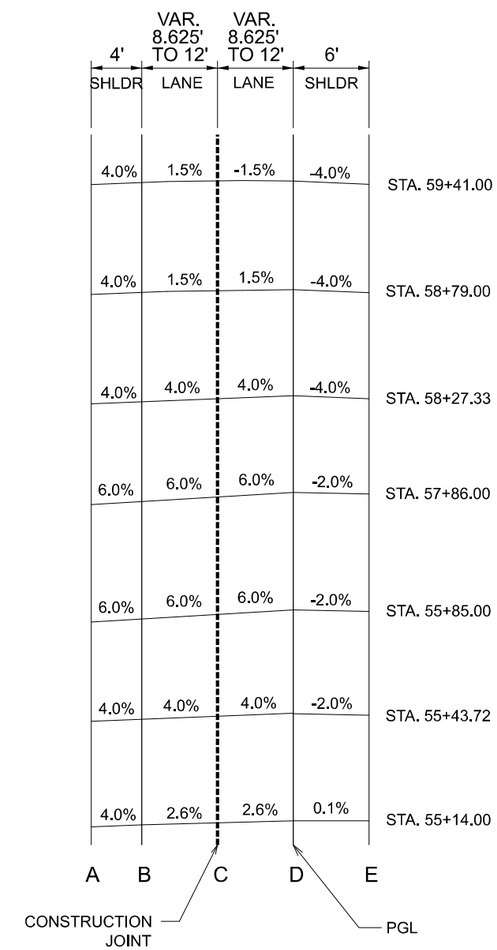

MODEL: Super - Detail 1 [Sheet]
FILE NAME: N:\DOT\220628\CAD_Sheets\Civil\D264N98-sht-detail-super.dgn

CHRISTOPHER B. BURKE ENGINEERING, LTD.
9575 W. Higgins Road, Suite 600
Rosemont, Illinois 60018
(847) 823-0500

USER NAME = nhowelllindgren	DESIGNED -	REVISED -	
	DRAWN -	REVISED -	
	CHECKED -	REVISED -	
PLOT DATE = 2/6/2025	DATE -	REVISED -	

STATE OF ILLINOIS
DEPARTMENT OF TRANSPORTATION

IL 38/I-39 INTERCHANGE IMPROVEMENTS
SUPERELEVATION DETAILS

SCALE: 1"=30' | SHEET 1 OF 2 SHEETS | STA. 55+00.00 TO STA. 60+00.00

F.A.* RTE.	SECTION	COUNTY	TOTAL SHEETS	SHEET NO.
*	141-1HBR-3 & (9, 10) R-3	OGLE	508	89
		CONTRACT NO. 64N98		
	ILLINOIS	FED. AID PROJECT		

*FAI ROUTE 39 (I-39) & FAP 567 (IL 38)

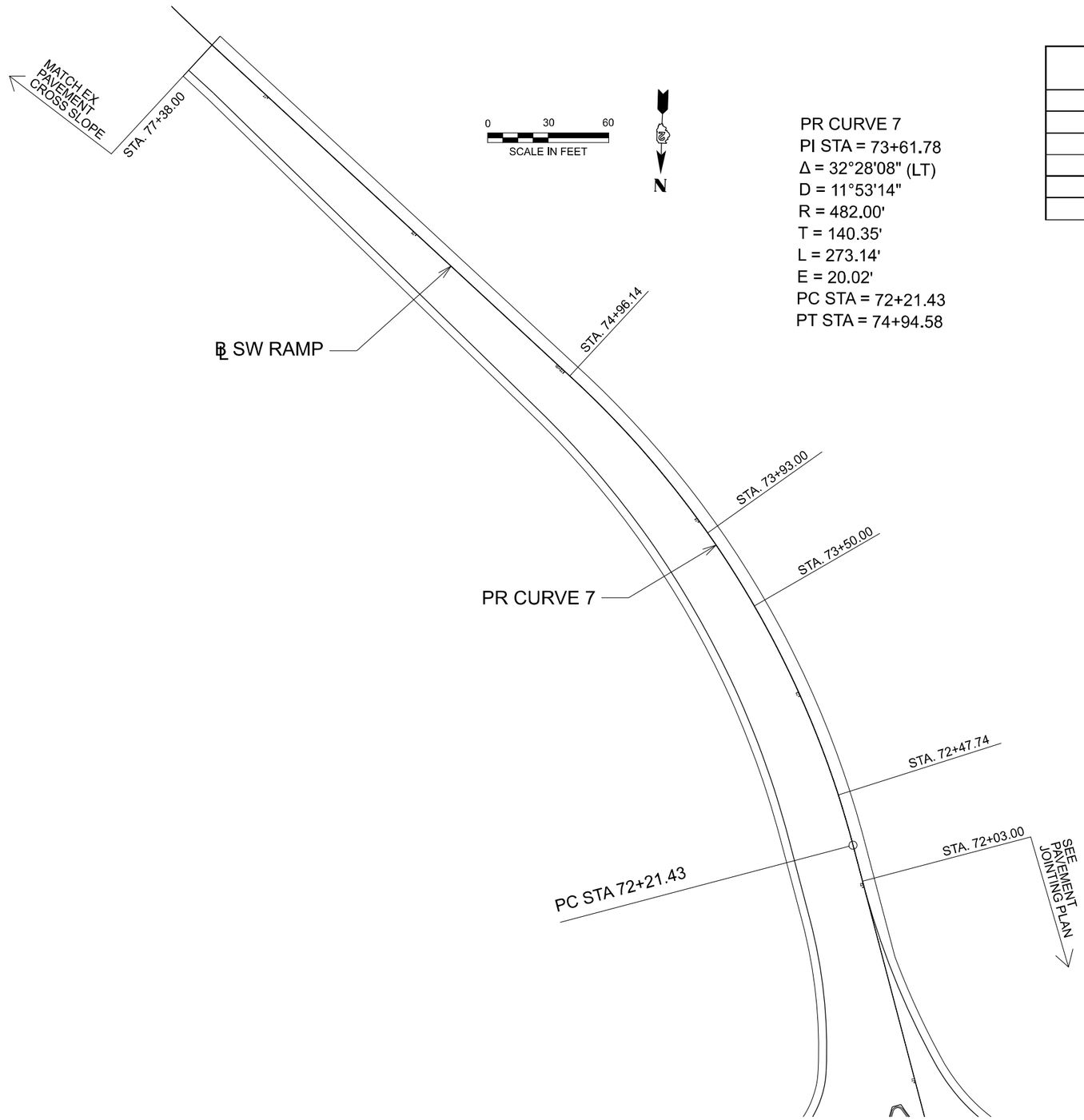

PR CURVE 7
PI STA = 73+61.78
Δ = 32°28'08" (LT)
D = 11°53'14"
R = 482.00'
T = 140.35'
L = 273.14'
E = 20.02'
PC STA = 72+21.43
PT STA = 74+94.58

STATION	SHLD WIDTH	LT LANE WIDTH	ELEVATIONS AT LOCATIONS					RT LANE WIDTH	SHLD WIDTH
			A	B	C	D	E		
77+38.00	4	8.5	808.05	807.83	807.38	806.92	806.60	8.5	6
74+96.14	4	11.4	810.14	810.30	810.77	811.22	810.98	11.4	6
73+93.00	4	12.8	810.67	810.99	812.02	813.05	813.05	12.8	6
73+50.00	4	13.5	811.34	811.66	812.74	813.82	813.82	13.5	6
72+47.74	4	14.8	814.29	814.45	815.04	815.63	815.39	14.8	6
72+03.00	4	15	815.60	815.76	816.09	816.43	816.19	15	6

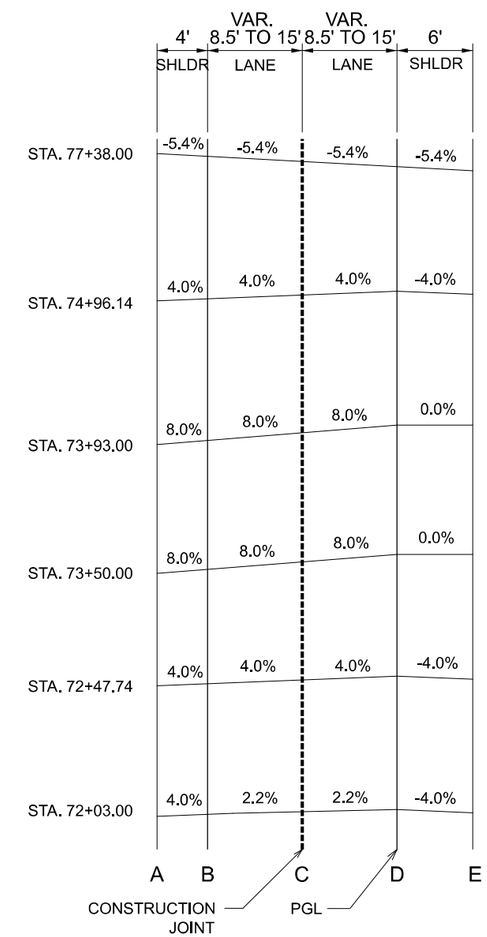

MODEL: Super - Detail 2 [Sheet]
FILE NAME: N:\DOT\220628\CAD_Sheets\Civil\D264N98-sht-detail-super.dgn

CHRISTOPHER B. BURKE ENGINEERING, LTD.
9575 W. Higgins Road, Suite 600
Rosemont, Illinois 60018
(847) 823-0500

USER NAME = nhowelllindgren	DESIGNED -	REVISED -	
	DRAWN -	REVISED -	
	CHECKED -	REVISED -	
PLOT DATE = 2/5/2025	DATE -	REVISED -	

STATE OF ILLINOIS
DEPARTMENT OF TRANSPORTATION

IL 38/I-39 INTERCHANGE IMPROVEMENTS
SUPERELEVATION DETAILS

SCALE: 1"=30' | SHEET 2 OF 2 SHEETS | STA. 71+00.00 TO STA. 77+38.00

F.A.* RTE.	SECTION	COUNTY	TOTAL SHEETS	SHEET NO.
*	141-1HBR-3 & (9, 10) R-3	OGLE	508	90
		CONTRACT NO. 64N98		
	ILLINOIS	FED. AID PROJECT		

*FAI ROUTE 39 (I-39) & FAP 567 (IL 38)

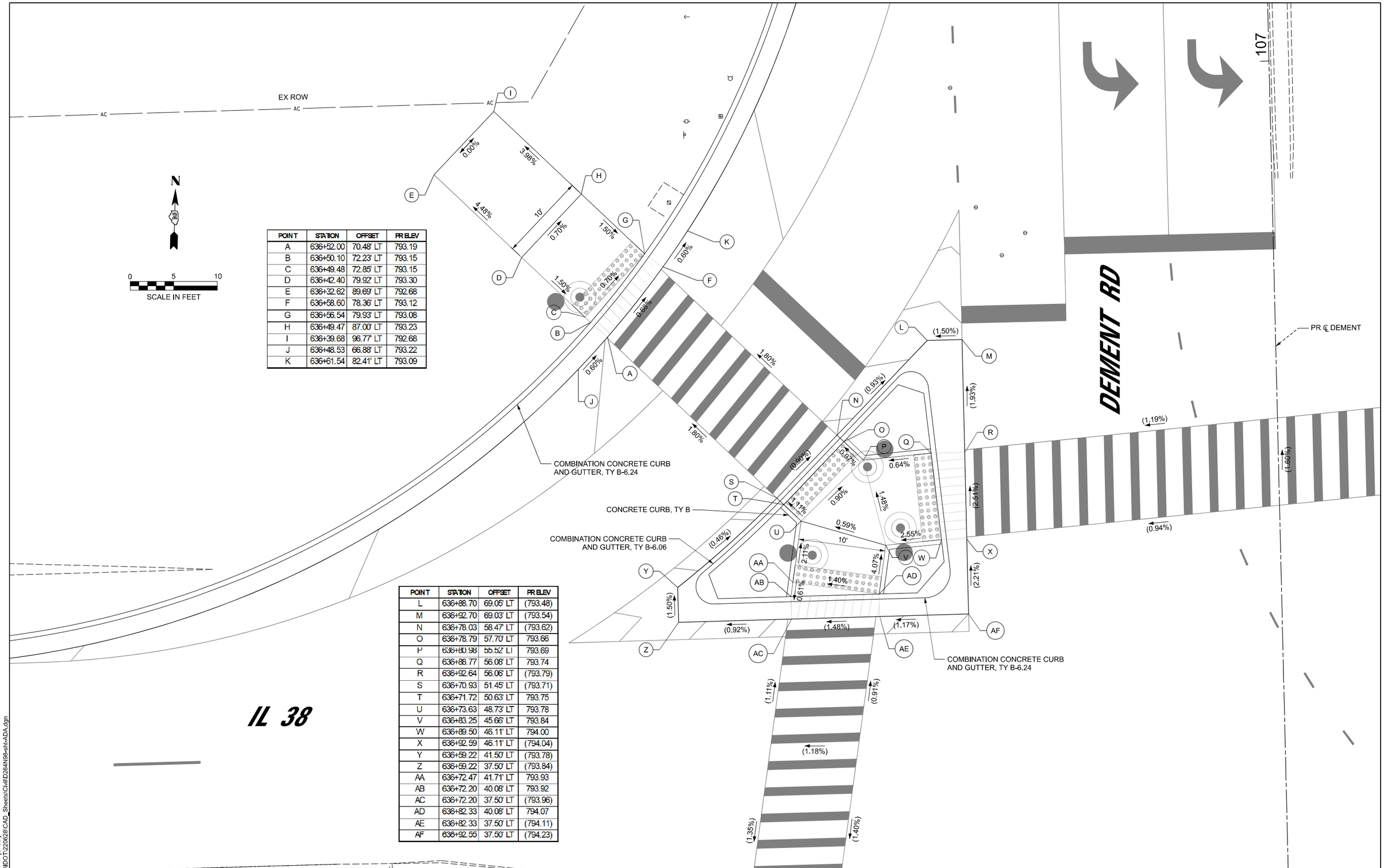

POINT	STATION	OFFSET	PR ELEV
A	636+52.00	70.48' LT	793.19
B	636+50.10	72.23' LT	793.15
C	636+49.48	72.85' LT	793.15
D	636+42.40	79.92' LT	793.30
E	636+32.62	89.69' LT	792.68
F	636+58.60	78.36' LT	793.12
G	636+56.54	79.93' LT	793.08
H	636+49.47	87.00' LT	793.23
I	636+39.68	96.77' LT	792.68
J	636+48.53	66.88' LT	793.22
K	636+61.54	82.41' LT	793.09

POINT	STATION	OFFSET	PR ELEV
L	636+88.70	69.05' LT	(793.48)
M	636+92.70	69.03' LT	(793.54)
N	636+78.03	58.47' LT	(793.62)
O	636+78.79	57.70' LT	793.66
P	636+80.98	55.52' LT	793.69
Q	636+88.77	56.08' LT	793.74
R	636+92.64	56.06' LT	(793.79)
S	636+70.93	51.45' LT	(793.71)
T	636+71.72	50.63' LT	793.75
U	636+73.63	48.73' LT	793.78
V	636+83.25	45.66' LT	793.84
W	636+89.50	46.11' LT	794.00
X	636+92.59	46.11' LT	(794.04)
Y	636+59.22	41.50' LT	(793.78)
Z	636+59.22	37.50' LT	(793.84)
AA	636+72.47	41.71' LT	793.93
AB	636+72.20	40.08' LT	793.92
AC	636+72.20	37.50' LT	(793.96)
AD	636+82.33	40.08' LT	794.07
AE	636+82.33	37.50' LT	(794.11)
AF	636+92.55	37.50' LT	(794.23)

MODEL: shi-ADA-1 [Sheet]
FILE NAME: N:\IDOT220628\CAD_Sheets\Civil\D264N98-shi-ADA.dgn

CHRISTOPHER B. BURKE ENGINEERING, LTD.
9575 W. Higgins Road, Suite 600
Rosemont, Illinois 60018
(847) 823-0500

USER NAME = nhowellilindgren	DESIGNED -	REVISED -	
	DRAWN -	REVISED -	
	CHECKED -	REVISED -	
PLOT DATE = 2/6/2025	DATE -	REVISED -	

STATE OF ILLINOIS
DEPARTMENT OF TRANSPORTATION

IL 38/I-39 INTERCHANGE IMPROVEMENTS
SIDEWALK RAMP GRADING DETAILSSIDEWALK RAMP GRADING DETAILS

SCALE: 1"=5' | SHEET 1 OF 7 SHEETS | STA. TO STA.

F.A.* RTE.	SECTION	COUNTY	TOTAL SHEETS	SHEET NO.
*	141-1HBR-3 & (9, 10) R-3	OGLE	508	91

CONTRACT NO. 64N98

ILLINOIS | FED. AID PROJECT

*FAI ROUTE 39 (I-39) & FAP 567 (IL 38)

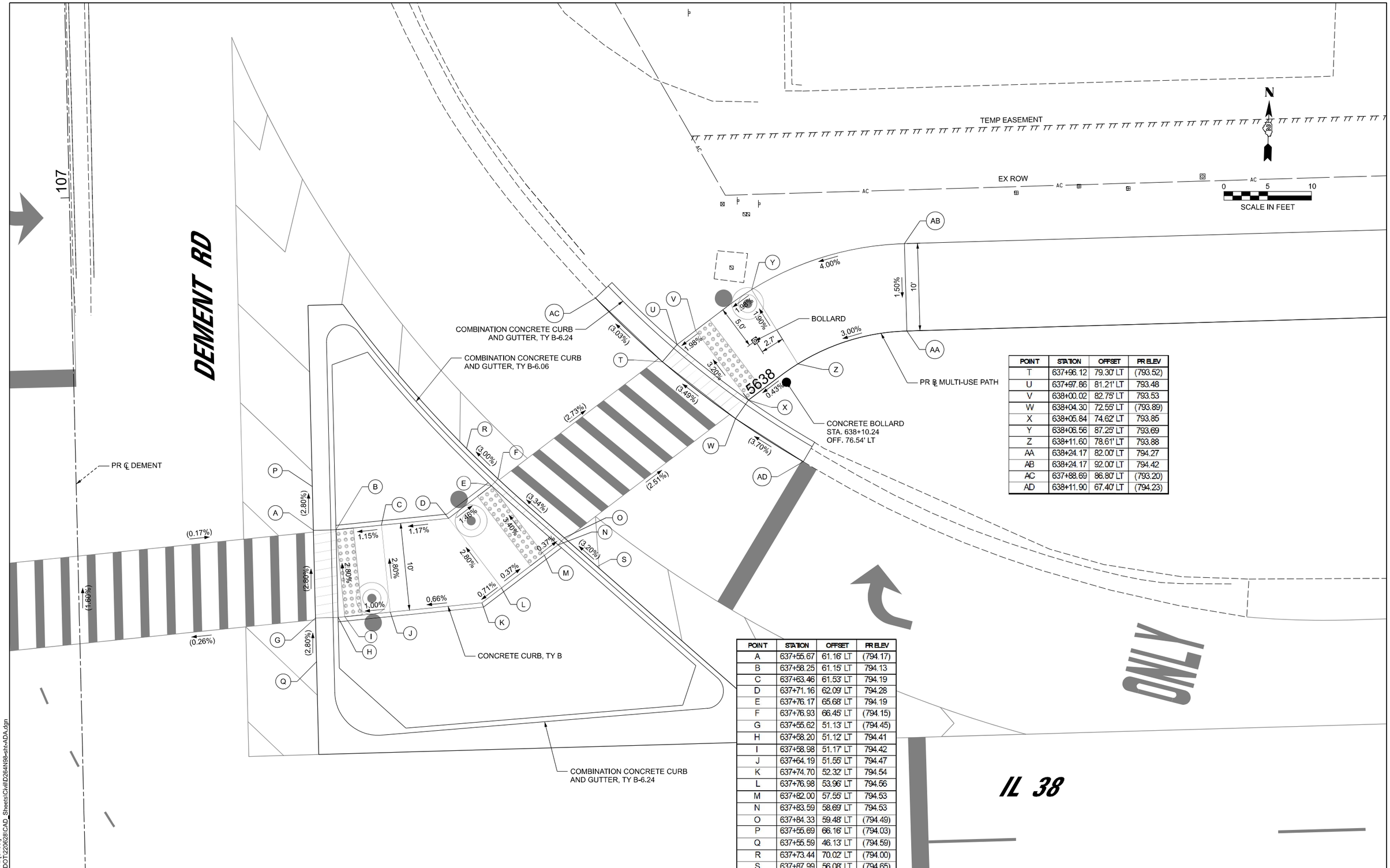

POINT	STATION	OFFSET	PR ELEV
T	637+96.12	79.30' LT	(793.52)
U	637+97.86	81.21' LT	793.48
V	638+00.02	82.75' LT	793.53
W	638+04.30	72.55' LT	(793.89)
X	638+05.84	74.62' LT	793.85
Y	638+06.56	87.25' LT	793.69
Z	638+11.60	78.61' LT	793.88
AA	638+24.17	82.00' LT	794.27
AB	638+24.17	92.00' LT	794.42
AC	637+88.69	86.80' LT	(793.20)
AD	638+11.90	67.40' LT	(794.23)

POINT	STATION	OFFSET	PR ELEV
A	637+55.67	61.16' LT	(794.17)
B	637+58.25	61.15' LT	794.13
C	637+63.46	61.53' LT	794.19
D	637+71.16	62.09' LT	794.28
E	637+76.17	65.68' LT	794.19
F	637+76.93	66.45' LT	(794.15)
G	637+55.62	51.13' LT	(794.45)
H	637+58.20	51.12' LT	794.41
I	637+58.98	51.17' LT	794.42
J	637+64.19	51.55' LT	794.47
K	637+74.70	52.32' LT	794.54
L	637+76.98	53.96' LT	794.56
M	637+82.00	57.55' LT	794.53
N	637+83.59	58.69' LT	794.53
O	637+84.33	59.48' LT	(794.49)
P	637+55.69	66.16' LT	(794.03)
Q	637+55.59	46.13' LT	(794.59)
R	637+73.44	70.02' LT	(794.00)
S	637+87.99	56.08' LT	(794.65)

MODEL: sht-ADA-2 [Sheet]
FILE NAME: N:\IDOT220628\CAD_Sheets\Civil\D284N98-sht-ADA.dgn

CHRISTOPHER B. BURKE ENGINEERING, LTD.
9575 W. Higgins Road, Suite 600
Rosemont, Illinois 60018
(847) 823-0500

USER NAME = nhowelllindgren	DESIGNED -	REVISED -	
	DRAWN -	REVISED -	
	CHECKED -	REVISED -	
PLOT DATE = 2/5/2025	DATE -	REVISED -	

STATE OF ILLINOIS
DEPARTMENT OF TRANSPORTATION

IL 38/I-39 INTERCHANGE IMPROVEMENTS
SIDEWALK RAMP GRADING DETAILS

SCALE: 1"=5' | SHEET 2 OF 7 SHEETS | STA. | TO STA.

F.A.* RTE.	SECTION	COUNTY	TOTAL SHEETS	SHEET NO.
*	141-1HBR-3 & (9, 10) R-3	OGLE	508	92

CONTRACT NO. 64N98

ILLINOIS | FED. AID PROJECT

*FAI ROUTE 39 (I-39) & FAP 567 (IL 38)

POINT	STATION	OFFSET	PR ELEV
A	636+59.20	35.00' RT	(793.89)
B	636+59.20	38.64' RT	793.81
C	636+58.12	45.23' RT	793.67
D	636+53.54	50.82' RT	793.51
E	636+52.79	51.60' RT	(793.47)
F	636+69.45	35.00' RT	(793.98)
G	636+69.45	37.94' RT	793.92
H	636+69.07	40.27' RT	793.87
I	636+67.55	49.50' RT	793.68
J	636+61.28	57.16' RT	793.48
K	636+60.75	57.80' RT	793.45
L	636+60.00	58.58' RT	(793.41)
M	636+54.20	35.00' RT	(793.84)
N	636+74.45	35.00' RT	(794.03)
O	636+49.19	48.13' RT	(793.50)
P	636+63.59	62.06' RT	(793.39)

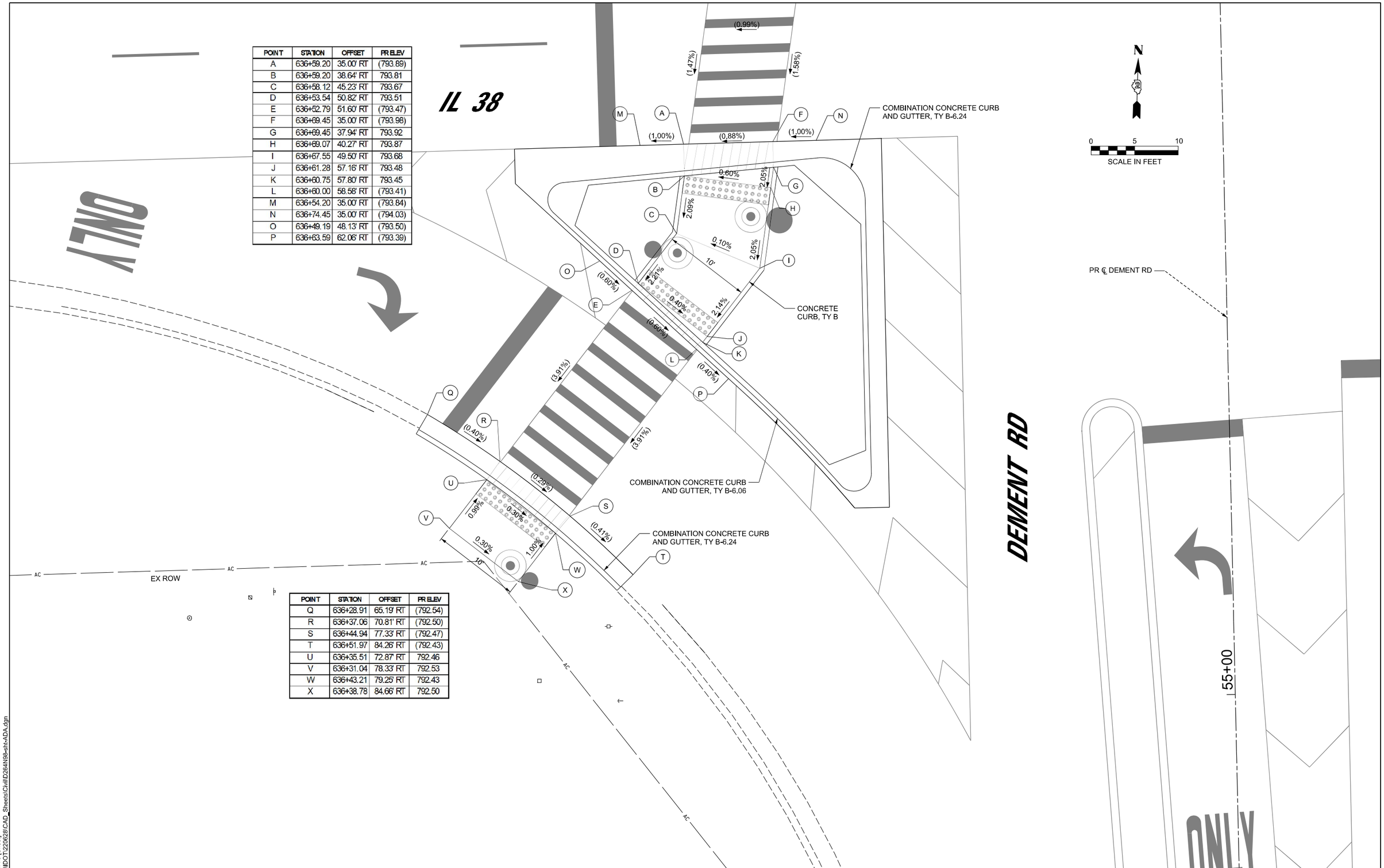

POINT	STATION	OFFSET	PR ELEV
Q	636+28.91	65.19' RT	(792.54)
R	636+37.06	70.81' RT	(792.50)
S	636+44.94	77.33' RT	(792.47)
T	636+51.97	84.26' RT	(792.43)
U	636+35.51	72.87' RT	792.46
V	636+31.04	78.33' RT	792.53
W	636+43.21	79.25' RT	792.43
X	636+38.78	84.66' RT	792.50

MODEL: sht-ADA-3 [Sheet]
FILE NAME: N:\DOT\220628\CAD_Sheets\Civil\D264N98-sht-ADA.dgn

CHRISTOPHER B. BURKE ENGINEERING, LTD.
9575 W. Higgins Road, Suite 600
Rosemont, Illinois 60018
(847) 823-0500

USER NAME = nhowelllindgren	DESIGNED -	REVISED -	
	DRAWN -	REVISED -	
	CHECKED -	REVISED -	
PLOT DATE = 2/6/2025	DATE -	REVISED -	

STATE OF ILLINOIS
DEPARTMENT OF TRANSPORTATION

IL 38/I-39 INTERCHANGE IMPROVEMENTS
SIDEWALK RAMP GRADING DETAILS

SCALE: 1"=5' | SHEET 3 OF 7 SHEETS | STA. TO STA.

F.A.* RTE.	SECTION	COUNTY	TOTAL SHEETS	SHEET NO.
*	141-1HBR-3 & (9, 10) R-3	OGLE	508	93
		CONTRACT NO. 64N98		
	ILLINOIS	FED. AID PROJECT		

*FAI ROUTE 39 (I-39) & FAP 567 (IL 38)

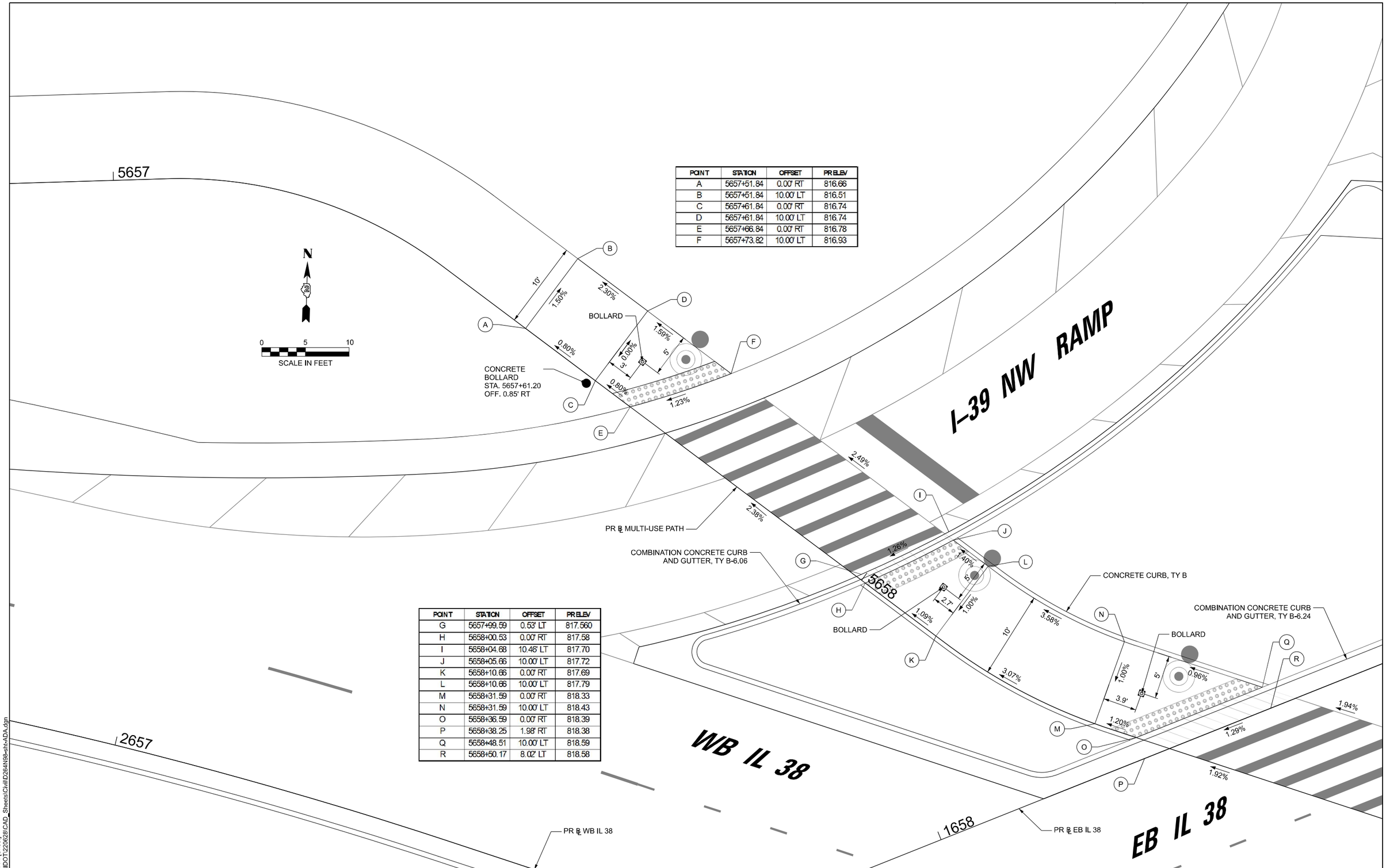

POINT	STATION	OFFSET	PR ELEV
A	5657+51.84	0.00' RT	816.66
B	5657+51.84	10.00' LT	816.51
C	5657+61.84	0.00' RT	816.74
D	5657+61.84	10.00' LT	816.74
E	5657+66.84	0.00' RT	816.78
F	5657+73.82	10.00' LT	816.93

POINT	STATION	OFFSET	PR ELEV
G	5657+99.59	0.53' LT	817.560
H	5658+00.53	0.00' RT	817.58
I	5658+04.68	10.46' LT	817.70
J	5658+05.66	10.00' LT	817.72
K	5658+10.66	0.00' RT	817.69
L	5658+10.66	10.00' LT	817.79
M	5658+31.59	0.00' RT	818.33
N	5658+31.59	10.00' LT	818.43
O	5658+36.59	0.00' RT	818.39
P	5658+38.25	1.98' RT	818.38
Q	5658+48.51	10.00' LT	818.59
R	5658+50.17	8.02' LT	818.58

MODEL: sht-ADA-4 [Sheet]
FILE NAME: N:\IDOT220628\CAD_Sheets\Civil\D264N98-sht-ADA.dgn

CHRISTOPHER B. BURKE ENGINEERING, LTD.
9575 W. Higgins Road, Suite 600
Rosemont, Illinois 60018
(847) 823-0500

USER NAME = nhowelllindgren	DESIGNED -	REVISED -	
	DRAWN -	REVISED -	
	CHECKED -	REVISED -	
PLOT DATE = 2/6/2025	DATE -	REVISED -	

STATE OF ILLINOIS
DEPARTMENT OF TRANSPORTATION

IL 38/I-39 INTERCHANGE IMPROVEMENTS
SIDEWALK RAMP GRADING DETAILS

SCALE: 1"=5' | SHEET 4 OF 7 SHEETS | STA. TO STA.

F.A.* RTE.	SECTION	COUNTY	TOTAL SHEETS	SHEET NO.
*	141-1HBR-3 & (9, 10) R-3	OGLE	508	94

CONTRACT NO. 64N98

ILLINOIS | FED. AID PROJECT

*FAI ROUTE 39 (I-39) & FAP 567 (IL 38)

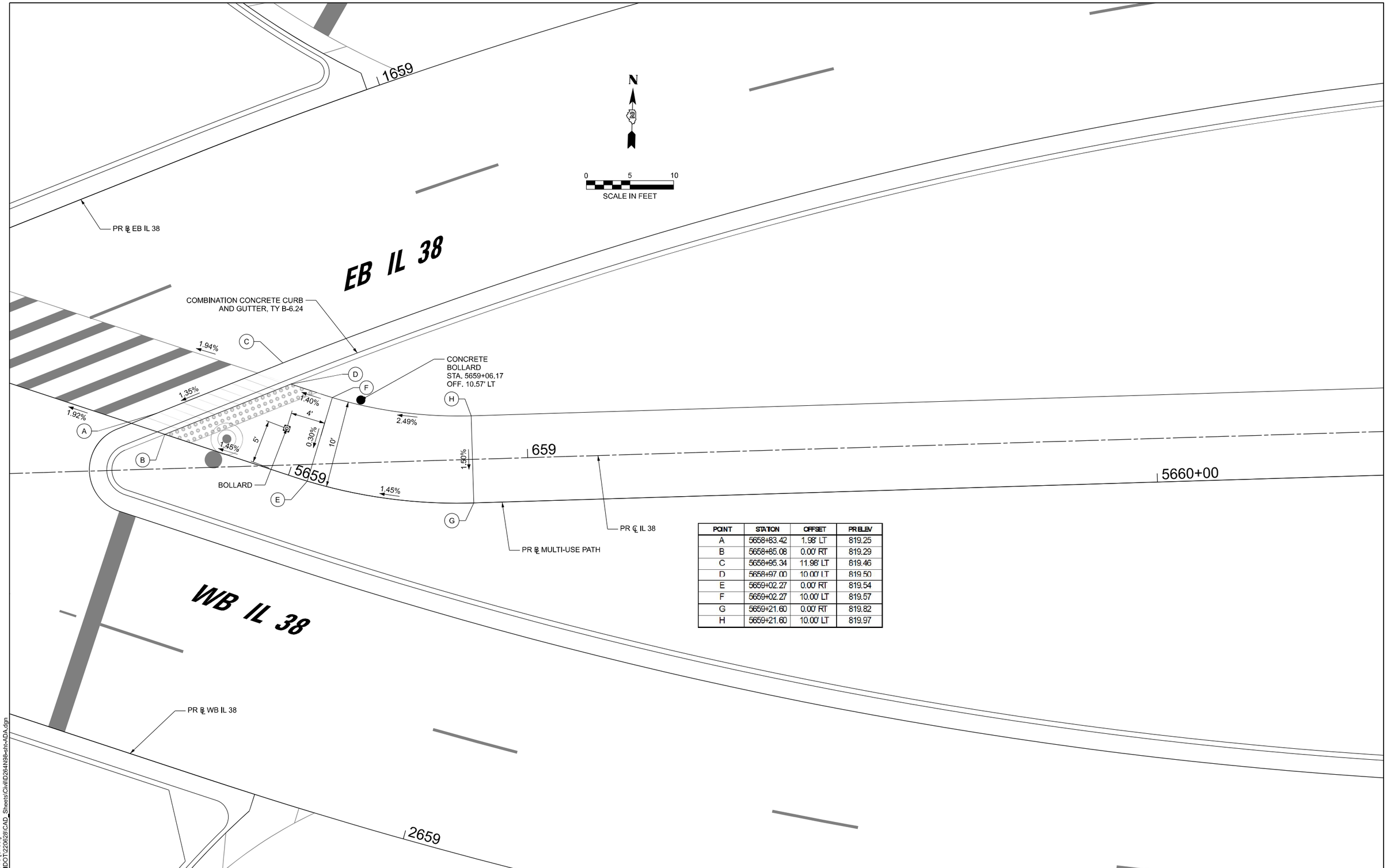

POINT	STATION	OFFSET	PR ELEV
A	5658+83.42	1.98' LT	819.25
B	5658+85.08	0.00' RT	819.29
C	5658+95.34	11.98' LT	819.46
D	5658+97.00	10.00' LT	819.50
E	5659+02.27	0.00' RT	819.54
F	5659+02.27	10.00' LT	819.57
G	5659+21.60	0.00' RT	819.82
H	5659+21.60	10.00' LT	819.97

MODEL: sht-ADA-5 [Sheet]
FILE NAME: N:\IDOT220628\CAD_Sheets\Civil\D264N98-sht-ADA.dgn

CHRISTOPHER B. BURKE ENGINEERING, LTD.
9575 W. Higgins Road, Suite 600
Rosemont, Illinois 60018
(847) 823-0500

USER NAME = nhowelllindgren	DESIGNED -	REVISED -	
	DRAWN -	REVISED -	
	CHECKED -	REVISED -	
PLOT DATE = 2/6/2025	DATE -	REVISED -	

STATE OF ILLINOIS
DEPARTMENT OF TRANSPORTATION

IL 38/I-39 INTERCHANGE IMPROVEMENTS
SIDEWALK RAMP GRADING DETAILS

SCALE: | SHEET 5 OF 7 SHEETS | STA. | TO STA.

F.A.* RTE.	SECTION	COUNTY	TOTAL SHEETS	SHEET NO.
*	141-1HBR-3 & (9, 10) R-3	OGLE	508	95
		CONTRACT NO. 64N98		
	ILLINOIS	FED. AID PROJECT		

*FAI ROUTE 39 (I-39) & FAP 567 (IL 38)

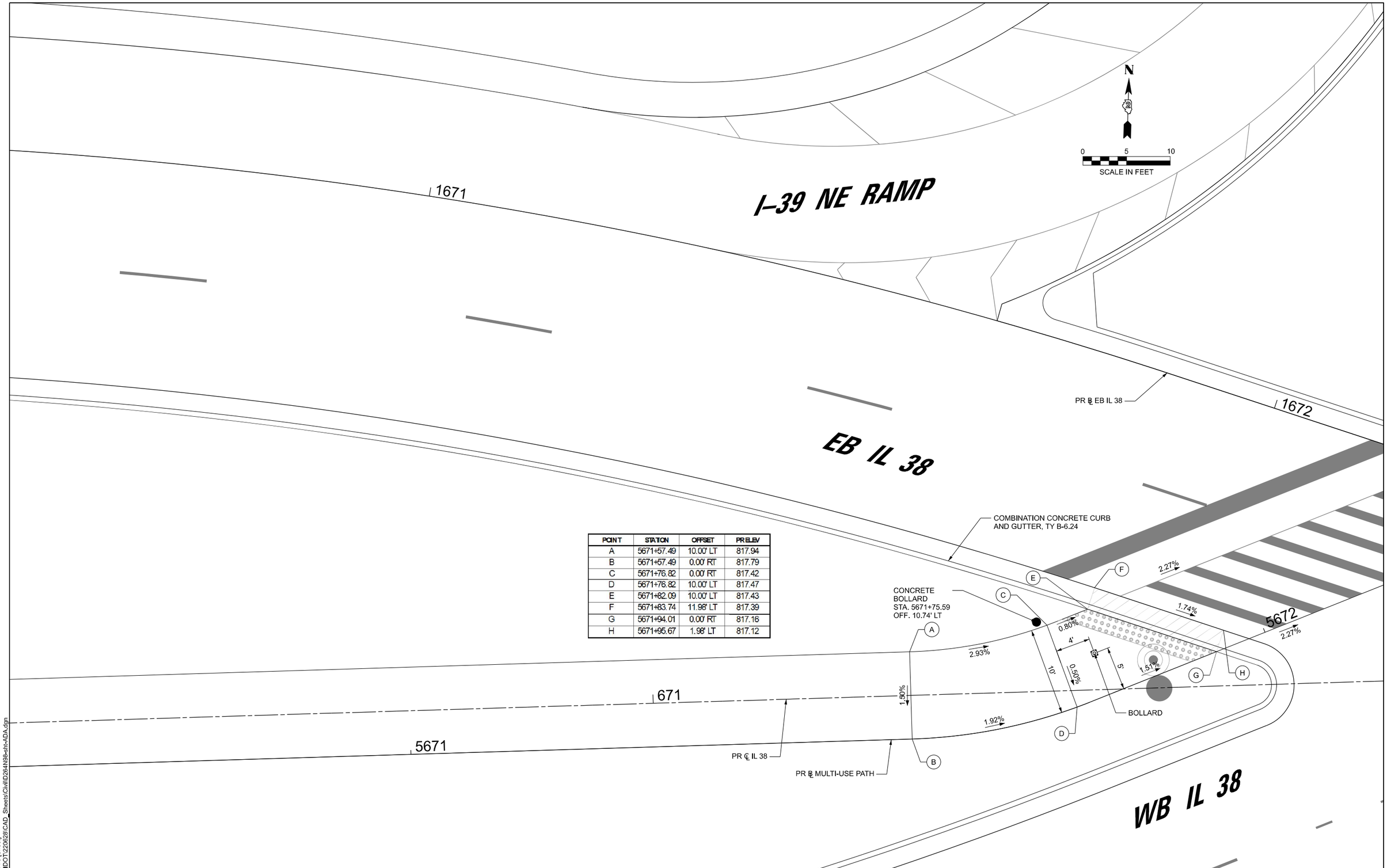

POINT	STATION	OFFSET	PR ELEV
A	5671+57.49	10.00' LT	817.94
B	5671+57.49	0.00' RT	817.79
C	5671+76.82	0.00' RT	817.42
D	5671+76.82	10.00' LT	817.47
E	5671+82.09	10.00' LT	817.43
F	5671+83.74	11.98' LT	817.39
G	5671+94.01	0.00' RT	817.16
H	5671+95.67	1.98' LT	817.12

MODEL: sht-ADA-6 [Sheet]
FILE NAME: N:\IDOT\220628\CAD_Sheets\Civil\D264N98-sht-ADA.dgn

CHRISTOPHER B. BURKE ENGINEERING, LTD.
5575 W. Higgins Road, Suite 600
Rosemont, Illinois 60018
(847) 823-0500

USER NAME = nhowelllindgren	DESIGNED -	REVISED -	
	DRAWN -	REVISED -	
	CHECKED -	REVISED -	
PLOT DATE = 2/6/2025	DATE -	REVISED -	

STATE OF ILLINOIS
DEPARTMENT OF TRANSPORTATION

IL 38/I-39 INTERCHANGE IMPROVEMENTS
SIDEWALK RAMP GRADING DETAILS

SCALE: | SHEET 6 OF 7 SHEETS | STA. | TO STA.

F.A.* RTE.	SECTION	COUNTY	TOTAL SHEETS	SHEET NO.
*	141-1HBR-3 & (9, 10) R-3	OGLE	508	96
		CONTRACT NO. 64N98		
	ILLINOIS	FED. AID PROJECT		

*FAI ROUTE 39 (I-39) & FAP 567 (IL 38)

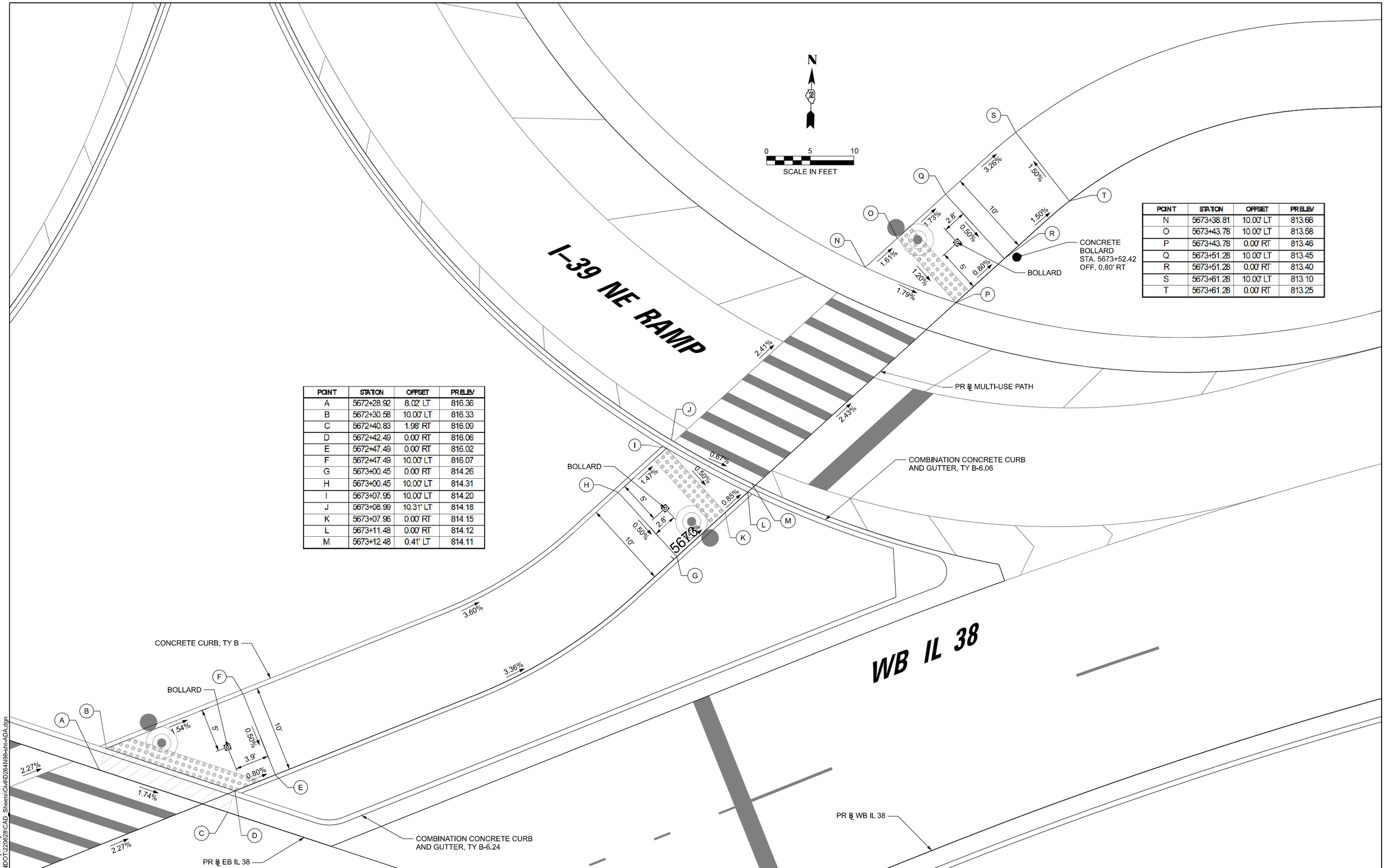

POINT	STATION	OFFSET	PR ELEV
N	5673+38.81	10.00' LT	813.66
O	5673+43.78	10.00' LT	813.58
P	5673+43.78	0.00' RT	813.46
Q	5673+51.28	10.00' LT	813.45
R	5673+51.28	0.00' RT	813.40
S	5673+61.28	10.00' LT	813.10
T	5673+61.28	0.00' RT	813.25

POINT	STATION	OFFSET	PR ELEV
A	5672+28.92	8.02' LT	816.36
B	5672+30.58	10.00' LT	816.33
C	5672+40.83	1.98' RT	816.09
D	5672+42.49	0.00' RT	816.06
E	5672+47.49	0.00' RT	816.02
F	5672+47.49	10.00' LT	816.07
G	5673+00.45	0.00' RT	814.26
H	5673+00.45	10.00' LT	814.31
I	5673+07.95	10.00' LT	814.20
J	5673+08.99	10.31' LT	814.18
K	5673+07.96	0.00' RT	814.15
L	5673+11.48	0.00' RT	814.12
M	5673+12.48	0.41' LT	814.11

MODEL: sht-ADA-7 [Sheet]
FILE NAME: N:\IDOT\220628\CAD_Sheets\Civil\D264N98-sht-ADA.dgn

CHRISTOPHER B. BURKE ENGINEERING, LTD.
8575 W. Higgins Road, Suite 600
Rosemont, Illinois 60018
(847) 823-0500

USER NAME = nhowellindgren	DESIGNED -	REVISED -	
	DRAWN -	REVISED -	
	CHECKED -	REVISED -	
PLOT DATE = 2/6/2025	DATE -	REVISED -	

STATE OF ILLINOIS
DEPARTMENT OF TRANSPORTATION

IL 38/I-39 INTERCHANGE IMPROVEMENTS
SIDEWALK RAMP GRADING DETAILS

SCALE: SHEET 7 OF 7 SHEETS STA. TO STA.

F.A.* RTE.	SECTION	COUNTY	TOTAL SHEETS	SHEET NO.
*	141-1HBR-3 & (9, 10) R-3	OGLE	508	97

CONTRACT NO. 64N98

ILLINOIS FED. AID PROJECT

*FAI ROUTE 39 (I-39) & FAP 567 (IL 38)

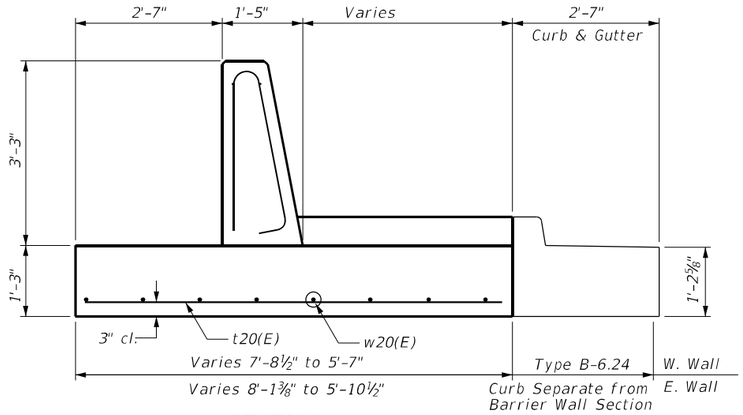

SECTION A-A

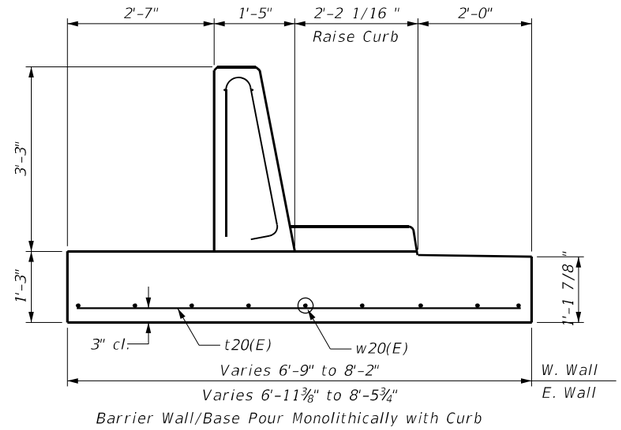

SECTION B-B

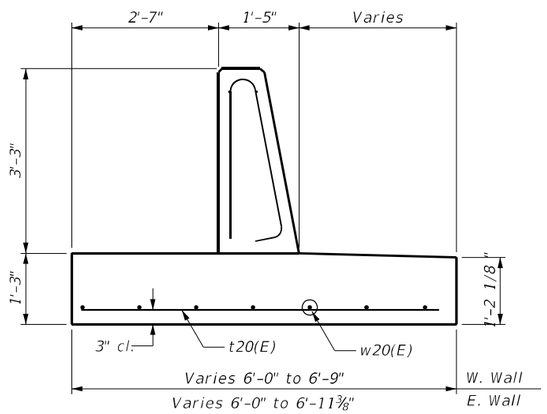

SECTION C-C

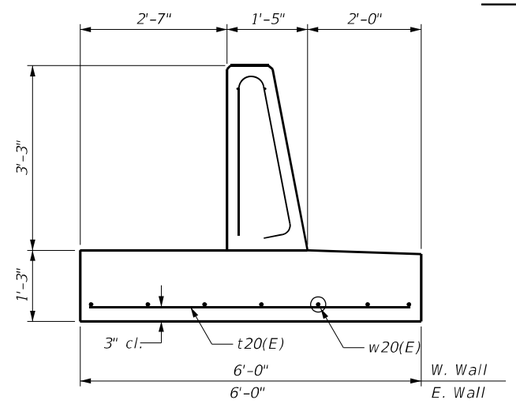

SECTION D-D

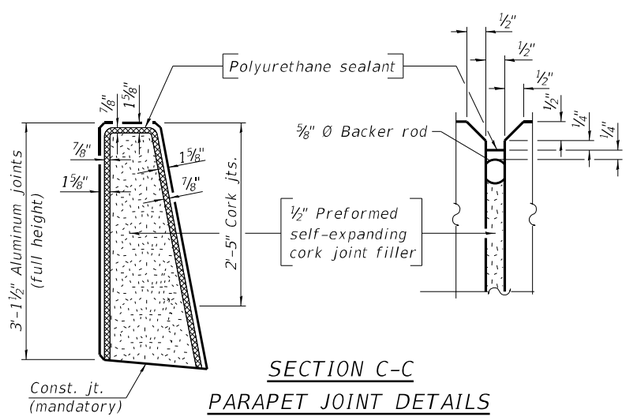

SECTION C-C

PARAPET JOINT DETAILS

The Polyurethane Sealant shall be according to Article 10150.04 of the Standard Specifications.

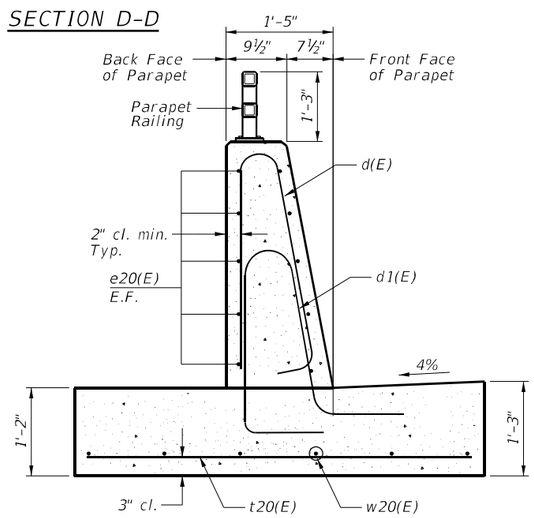

TYPICAL CROSS SECTION

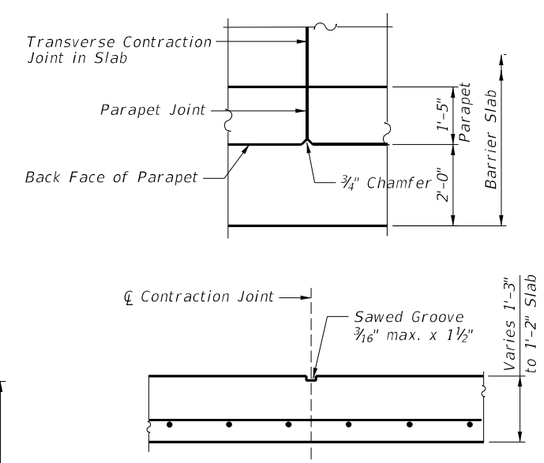

SECTION

TRANSVERSE CONTRACTION JOINT AT 39'-0"

See Art. 420.05(C) of Standard Specifications

MINIMUM BAR LAP

#5 bar = 3'-2"

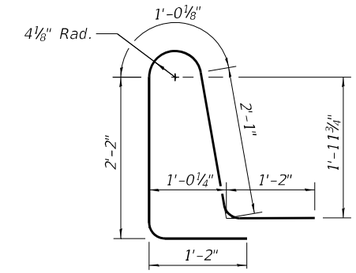

BAR d1(E)

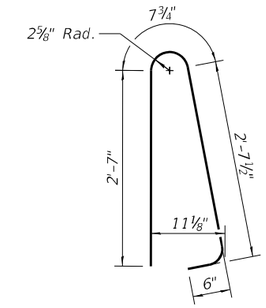

BAR d(E)

SUPERSTRUCTURE

BILL OF MATERIAL FOR EAST

Bar	No.	Size	Length	Shape
d(E)	586	#5	6'-5"	
d1(E)	586	#5	8'-9"	
e20(E)	200	#4	19'-2"	
t20(E)	254	#5	5'-8"	
t21(E)	86	#5	6'-5"	
t22(E)	88	#5	7'-10"	
w25(E)	84	#5	31'-0"	
w21(E)	12	#5	20'-0"	
Concrete Structures			Cu. Yds.	
Reinforcement Bars, Epoxy Coated			Lbs.	17,590
Protective Coat			Foot	
Parapet Railing			Foot	
Concrete Barrier Base (Special)			Foot	
Concrete Barrier Wall (Special)			Foot	
Joint Sealer			Foot	

SUPERSTRUCTURE

BILL OF MATERIAL FOR WEST

Bar	No.	Size	Length	Shape
d(E)	644	#5	6'-5"	
d1(E)	644	#5	8'-9"	
e20(E)	220	#4	19'-2"	
t20(E)	298	#5	5'-8"	
t21(E)	86	#5	6'-5"	
t22(E)	88	#5	7'-10"	
w20(E)	96	#5	30'-0"	
w21(E)	12	#5	20'-0"	
Concrete Structures			Cu. Yds.	
Reinforcement Bars, Epoxy Coated			Lbs.	19,310
Protective Coat			Foot	
Parapet Railing			Foot	
Concrete Barrier Base (Special)			Foot	
Concrete Barrier Wall (Special)			Foot	
Joint Sealer			Foot	

MODEL: Default
FILE NAME: N:\DOT\220628\CAD Sheets\Structures\220628-Barrier-Wall_Section.sht

CHRISTOPHER B. BURKE ENGINEERING, LTD.
9575 W. Higgins Road, Suite 600
Rosemont, Illinois 60018
(847) 823-0500

USER NAME = nhowelllindgren	DESIGNED -	REVISED -	
	DRAWN -	REVISED -	
	CHECKED -	REVISED -	
PLOT DATE = 2/6/2025	DATE -	REVISED -	

STATE OF ILLINOIS
DEPARTMENT OF TRANSPORTATION

OFF-BRIDGE CONCRETE BARRIER WALL SECTIONS AND DETAILS
STRUCTURE NO. 071-0058

SCALE: SHEET OF SHEETS STA. TO STA.

F.A.* RTE.	SECTION	COUNTY	TOTAL SHEETS	SHEET NO.
*	141-1HBR-3 & (9,10) R-3	OGLE	508	98
		CONTRACT NO. 64N98		
		ILLINOIS	FED. AID PROJECT	

*FAI ROUTE 39 (I-39) & FAP 567 (IL 38)

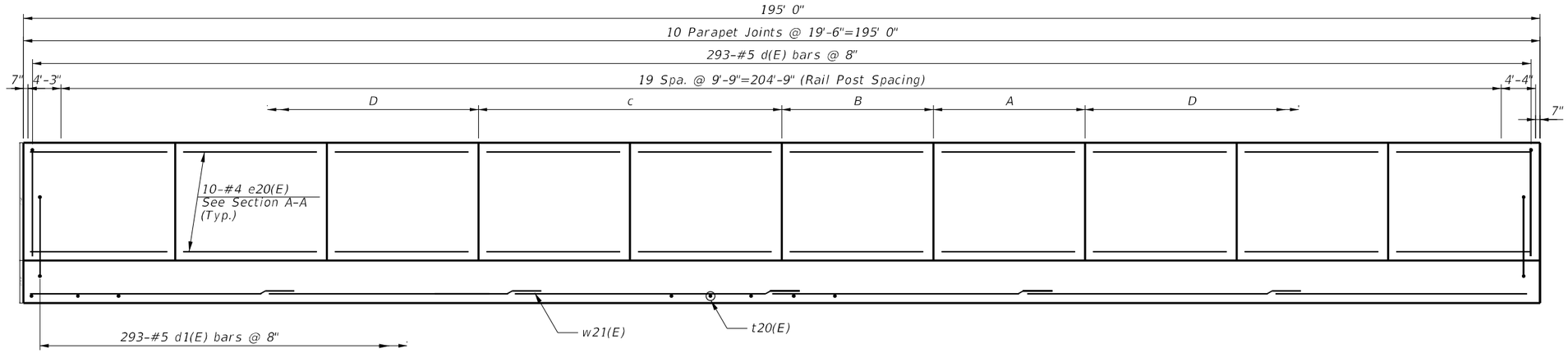

INSIDE ELEVATION - EAST BARRIER WALL

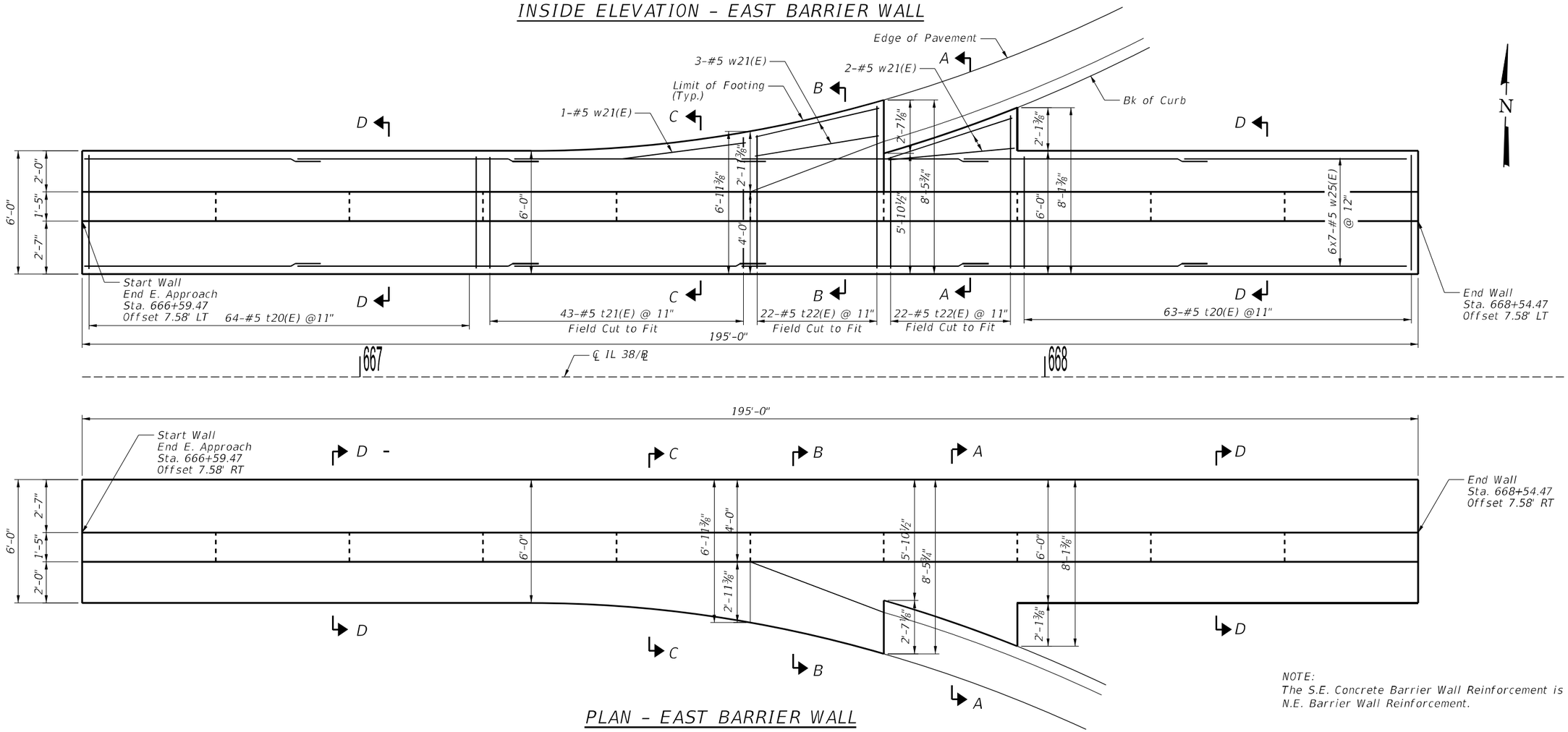

PLAN - EAST BARRIER WALL

NOTE:
The S.E. Concrete Barrier Wall Reinforcement is the same as N.E. Barrier Wall Reinforcement.

MODEL: Default
FILE NAME: N:\IDOT\220628\CAD_Sheets\Structures\220628-East-Barrier-Wall_Detail.sht

CHRISTOPHER B. BURKE ENGINEERING, LTD.
9575 W. Higgins Road, Suite 600
Rosemont, Illinois 60018
(847) 823-0500

USER NAME = nhowelllindgren	DESIGNED -	REVISED -	
	DRAWN -	REVISED -	
	CHECKED -	REVISED -	
PLOT DATE = 2/6/2025	DATE -	REVISED -	

STATE OF ILLINOIS
DEPARTMENT OF TRANSPORTATION

EAST OFF-BRIDGE CONCRETE BARRIER WALL
STRUCTURE NO. 071-0058

SCALE: | SHEET OF SHEETS | STA. TO STA.

F.A.* RTE.	SECTION	COUNTY	TOTAL SHEETS	SHEET NO.
*	141-1HBR-3 & (9,10) R-3	OGLE	508	99
		CONTRACT NO. 64N98		
	ILLINOIS	FED. AID PROJECT		

*FAI ROUTE 39 (I-39) & FAP 567 (IL 38)

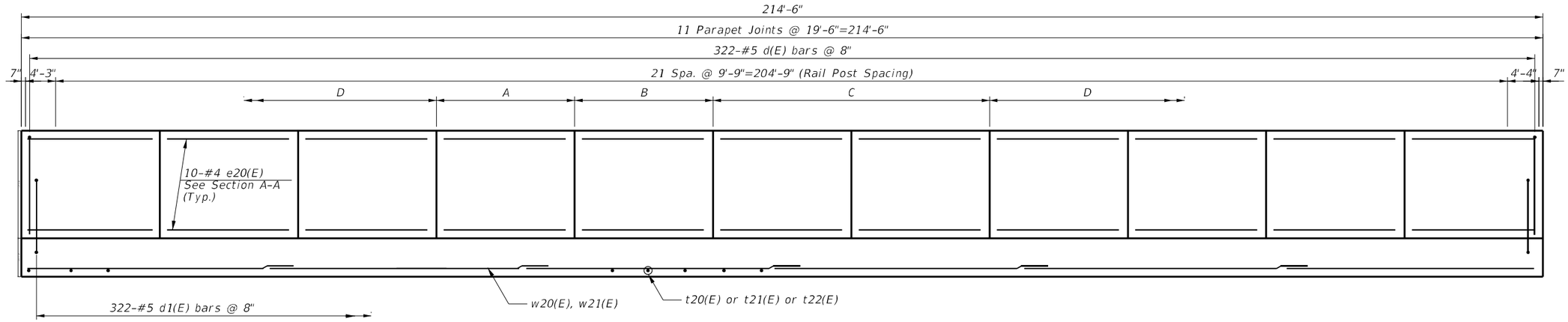

INSIDE ELEVATION - WEST BARRIER WALL

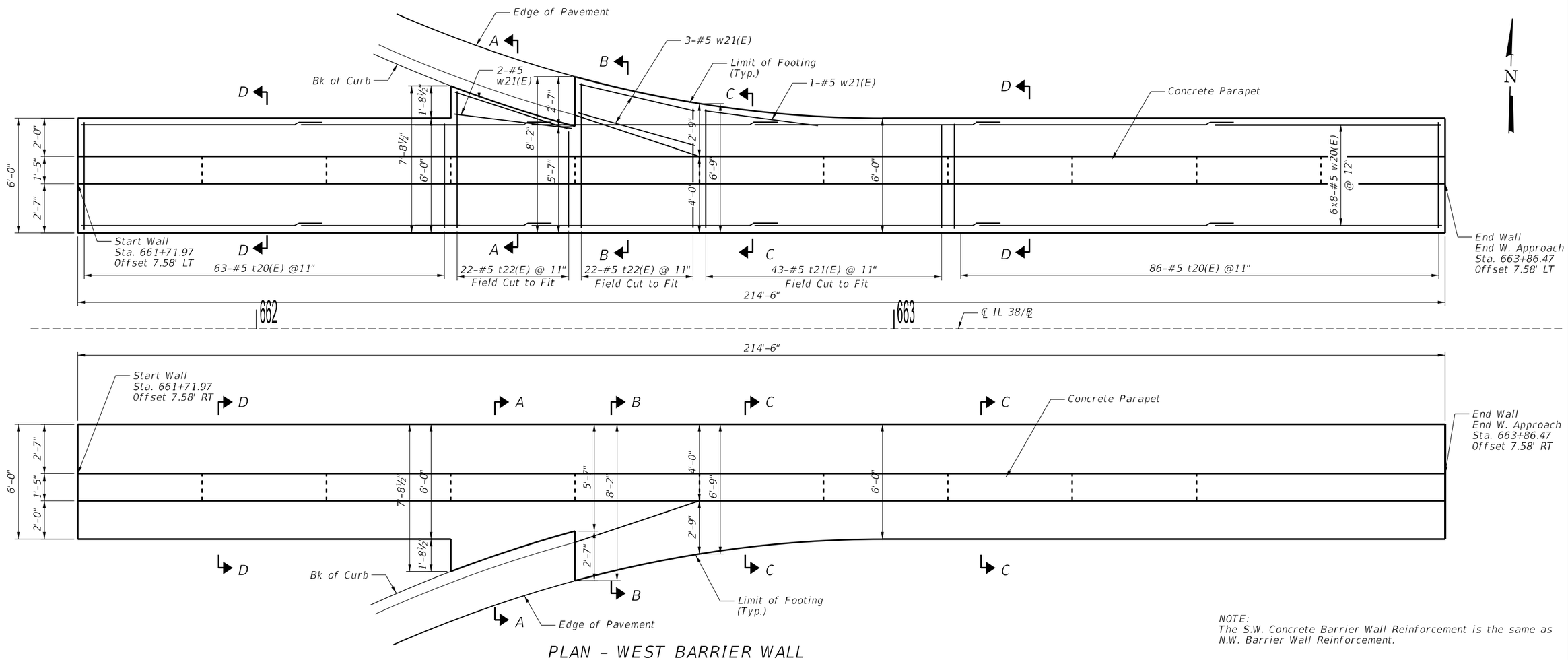

PLAN - WEST BARRIER WALL

NOTE:
The S.W. Concrete Barrier Wall Reinforcement is the same as N.W. Barrier Wall Reinforcement.

MODEL: Default
FILE NAME: N:\DOT\220628\CAD_Sheets\Structures\220628-West-Barrier-Wall_Detail.sht

CHRISTOPHER B. BURKE ENGINEERING, LTD. 8575 W. Higgins Road, Suite 600 Rosemont, Illinois 60018 (847) 823-0500	USER NAME = nhowelllindgren	DESIGNED -	REVISED -	STATE OF ILLINOIS DEPARTMENT OF TRANSPORTATION	WEST OFF-BRIDGE CONCRETE BARRIER WALL STRUCTURE NO. 071-0058	F.A.* RTE.	SECTION	COUNTY	TOTAL SHEETS	SHEET NO.
		DRAWN -	REVISED -			*	141-1HBR-3 & (9,10) R-3	OGLE	508	100
		CHECKED -	REVISED -			CONTRACT NO. 64N98				
	PLOT DATE = 2/6/2025	DATE -	REVISED -		SCALE: SHEET OF SHEETS STA. TO STA.	ILLINOIS FED. AID PROJECT				

*FAI ROUTE 39 (I-39) & FAP 567 (IL 38)