NOTES:

1. THE CONTRACT UNIT PRICE OF EACH FOR INLET, (SPECIAL) TYPE E SHALL INCLUDE ALL LABOR AND MATERIALS NECESSARY TO CONSTRUCT THE INLET IN ACCORDANCE WITH ARTICLE 602 OF THE STANDARD SPECIFICATIONS AND AND AS SHOWN HEREIN.

2. CLASS SI CONCRETE SHALL BE USED THROUGHOUT.

3. THE FRONT EDGE OF THE TOP SLAB SHALL BE EITHER STRAIGHT OR RADIUSED AS NEEDED TO CONFORM WITH THE SHAPE OF THE ADJACENT CURB AND GUTTER.

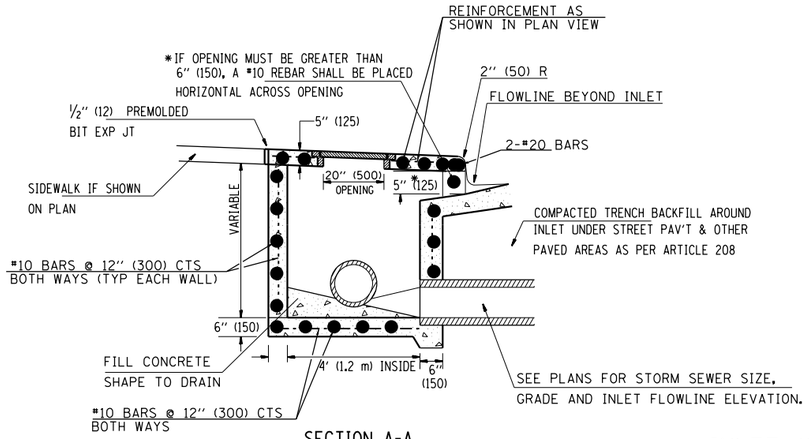

SECTION A-A

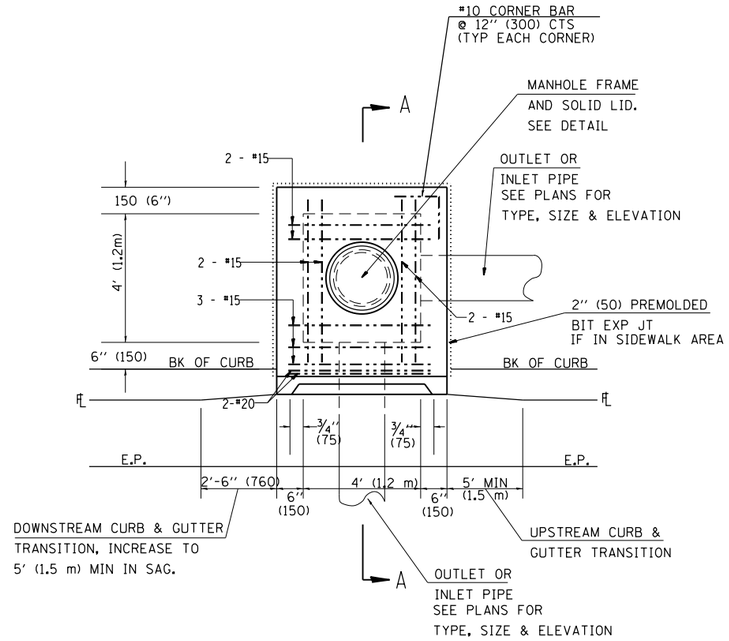

PLAN

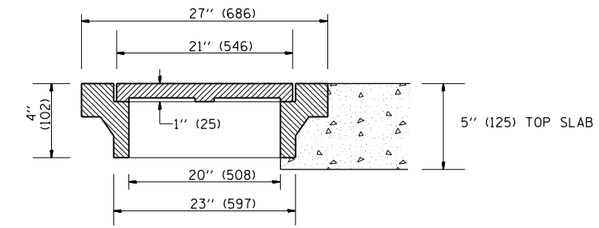

TYPICAL DETAIL OF MANHOLE FRAME AND SOLID LID

NEENAH R-6020 OR APPROVED EQUAL

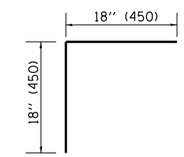

CORNER BAR

INLET (SPECIAL) TYPE E

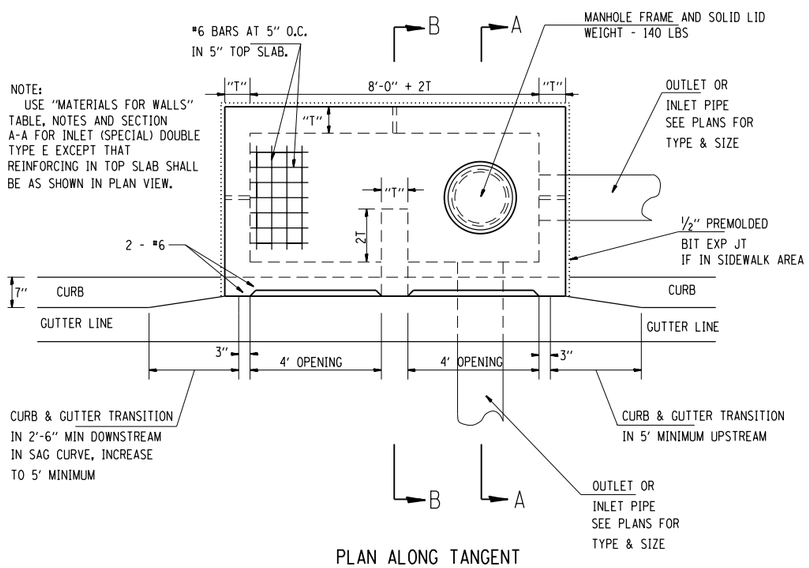

PLAN ALONG TANGENT

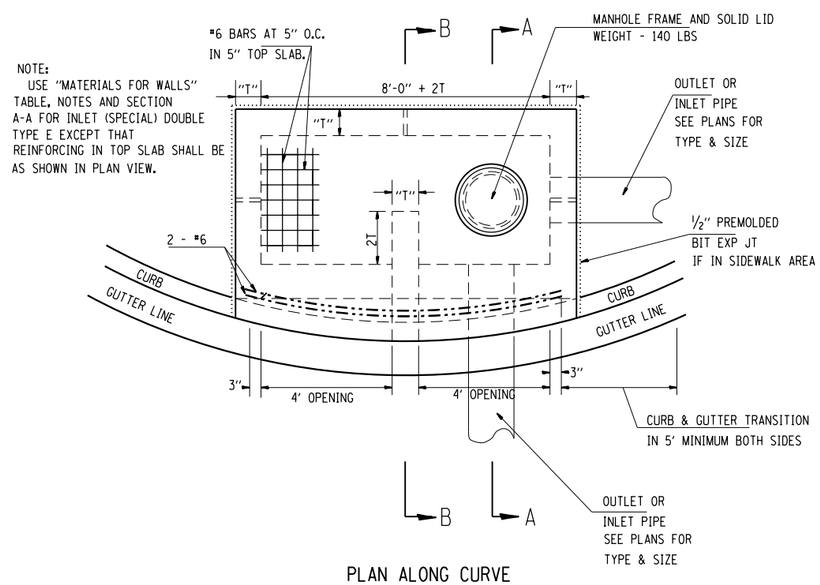

PLAN ALONG CURVE

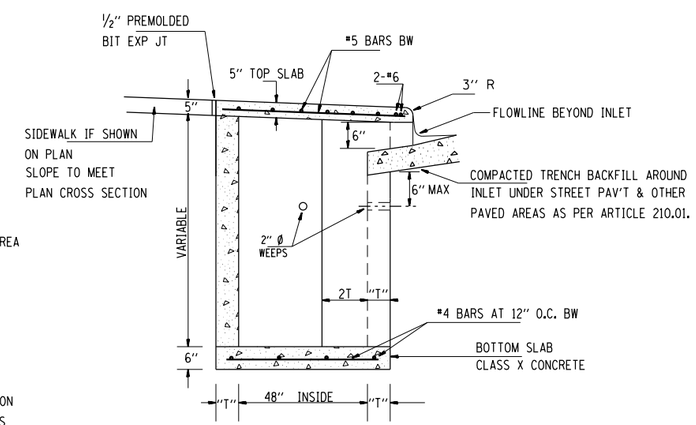

SECTION B-B

FOR 1, 2 & 3, SEE ABOVE

4. BRICKS, CONCRETE BLOCKS AND REINFORCED CONCRETE BLOCKS TO BE LAID IN FULL MORTAR BEDS WITH FLUSH JOINTS.

5. WHEN CONSTRUCTED OF MONOLITHIC CONCRETE, USE #4 REINFORCING BARS SPACED AT 12" CENTERS BOTH WAYS IN FLOOR SLAB AND WALLS.

6. FOR SECTION A-A, SEE ABOVE

INLET (SPECIAL) DOUBLE TYPE E

FILE NAME = c:\pw_work\pwidot\sparksgw\d0373645\D672890-sht-district_details.dgn	USER NAME = sparksgw	DESIGNED -	REVISED - CAD 10/20/97	STATE OF ILLINOIS DEPARTMENT OF TRANSPORTATION	DRAINAGE DETAILS INLET (SPECIAL) TYPE E	F.A.U. RTE.	SECTION	COUNTY	TOTAL SHEETS	SHEET NO.
TYPE E.DGN	PLOT SCALE = 40.0000 ' / in.	DRAWN - CAD	REVISED -			8012	21(W-3, TS-1, RS-7)	SANGAMON	679	452
D6TypeE	PLOT DATE = Feb-04-2014 01:49:46PM	CHECKED -	REVISED -			CONTRACT NO. 72890				
		DATE - 4/18/91	REVISED -		SCALE: SHEET OF SHEETS STA. TO STA.	ILLINOIS FED. AID PROJECT				