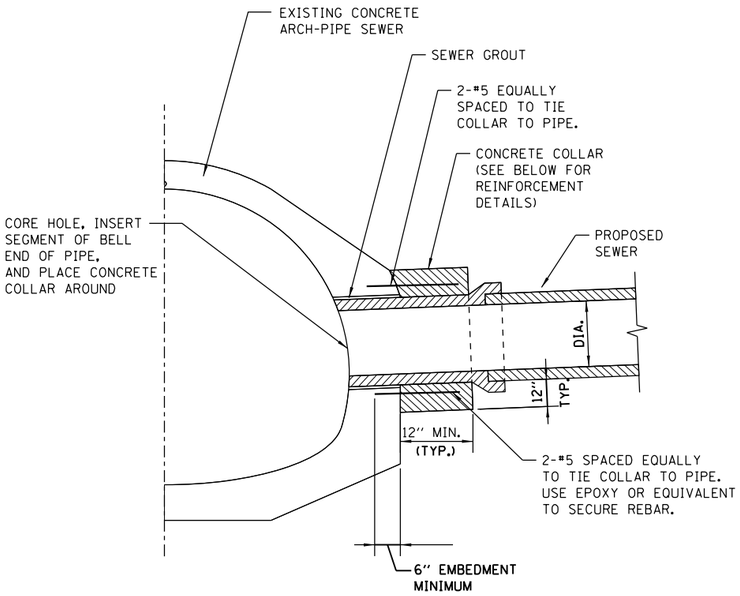

EXAMPLE TYPICAL CONNECTION DETAIL

(NOT TO SCALE)

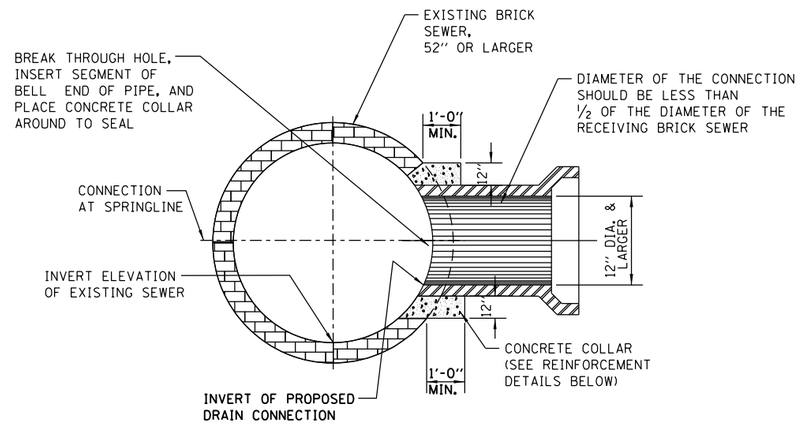

EXAMPLE TYPICAL BRICK SEWER CONNECTION FOR CONNECTING PIPE SIZES GREATER THAN 12" DIA.

(NOT TO SCALE)

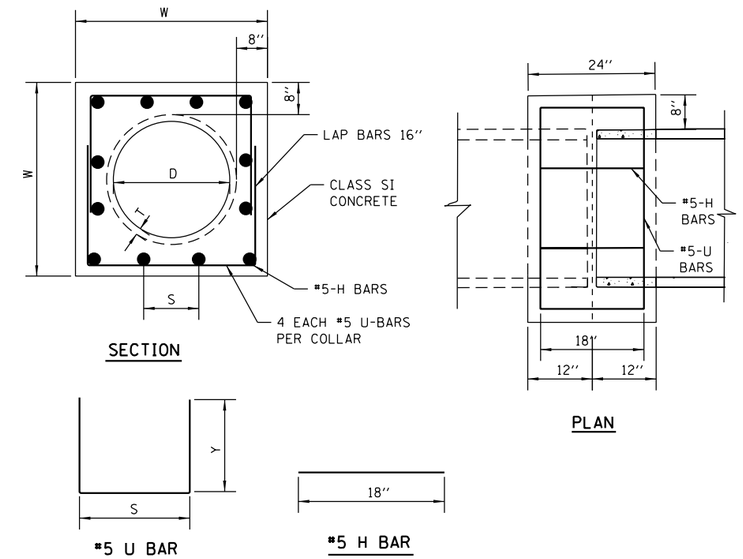

PIPE TO PIPE REINFORCED CONCRETE COLLAR DETAIL

SCALE: N.T.S.

CONRETE COLLAR NOTES:

1. ALL ITEMS AND MATERIALS SHALL CONFORM TO THE LATEST IDOT SSRBC SPECIFICATIONS, UNLESS OTHERWISE NOTED IN SUPPLEMENTAL SPECIFICATIONS FOR THE SPECIFIC PROJECT BEING CONSTRUCTED.
2. ALL CONCRETE SHALL CONFORM TO IDOT SSRBC ARTICLE 1020.04, CLASS SI, WITH A COMPRESSIVE STRENGTH OF 3500 PSI.
3. ALL EPOXY COATED REINFORCEMENT BARS SHALL CONFORM TO IDOT SSRBC SECTION 508, AND ARTICLE 1006.10.
4. UNLESS OTHERWISE SHOWN, THE COVER FOR REINFORCING STEEL SHALL BE AS FOLLOWS: A.) CONCRETE CAST AGAINST PERMANENTLY EXPOSE EARTH: 3" B.) ALL OTHER REINFORCING BARS: 2"
5. CONCRETE COLLARS SHALL BE USED AT ALL EXISTING/PROPOSED PIPE CONNECTIONS. TRIM EXISTING PIPE END TO PROVIDE FLUSH BUTT JOINT, INSTALL REBAR, AND PLACE CONCRETE COLLAR.
6. THE CONTRACTOR SHALL PROVIDE ALL MEASURES AND PRECAUTIONS NECESSARY TO PREVENT DAMAGE TO THE EXISTING SEWER DURING CONSTRUCTION. CONTRACTOR SHALL ADEQUATELY BRACE OR SHORE EXISTING SEWER IF REQUIRED TO MAINTAIN INTEGRITY OF SEWER DURING CONSTRUCTION. SUBMIT DESIGN AND DETAILS, SEALED AND SIGNED BY AN ILLINOIS LICENSED STRUCTURAL ENGINEER, SHOWING TEMPORARY BRACING FOR THE EXISTING SEWER DURING CONSTRUCTION FOR REVIEW PRIOR TO CONSTRUCTION. ANY DAMAGE TO EXISTING STRUCTURE IS RESPONSIBILITY OF THE CONTRACTOR.
7. CONTRACTOR SHALL DIVERT ALL FLOW FROM THE EXISTING SEWER PRIOR TO CONSTRUCTION SO THAT THE WORK CAN BE PERFORMED IN THE DRY CONDITION. SEWER MUST BE MAINTAINED IN SERVICE AT ALL TIMES. SUBMIT MEANS OF FLOW DIVERSION FOR REVIEW PRIOR BREAKING INTO EXISTING BRICK SEWER. ALL EXCAVATION SHALL BE KEPT DEWATERED DURING CONSTRUCTION OPERATIONS UNTIL BACKFILL IN PLACE. PROVISIONS SHALL BE MADE TO PREVENT THE BOTTOM OF ALL EXCAVATIONS FROM FREEZING OR FLOODING AT ALL TIMES. PLAN DIMENSIONS AND DETAILS RELATIVE TO EXISTING STRUCTURE SHALL BE SUBJECT TO NOMINAL CONSTRUCTION VARIATIONS. IT SHALL BE CONTRACTOR'S RESPONSIBILITY TO VERIFY SUCH DIMENSIONS AND DETAILS IN THE FIELD AND MAKE NECESSARY APPROVED ADJUSTMENTS PRIOR TO CONSTRUCTION OR ORDERING MATERIALS. SUCH VARIATIONS SHALL NOT BE CAUSE FOR ADDITIONAL COMPENSATION FOR A CHANGE IN THE SCOPE OF THE WORK, HOWEVER, CONTRACTOR WILL BE PAID FOR THE QUANTITY ACTUALLY FURNISHED AT THE UNIT PRICE OF THE WORK.

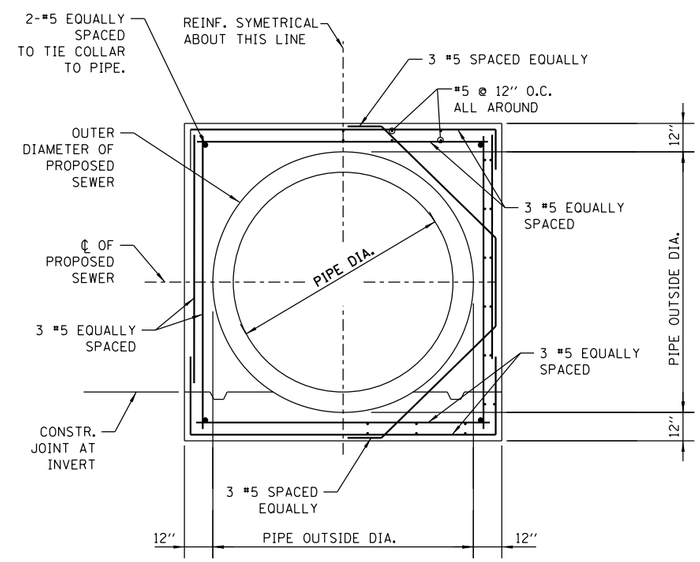

EXAMPLE CONCRETE COLLAR REINFORCEMENT - SECTION

(NOT TO SCALE)

			U BAR				H BAR				
D	T	W				TOTAL			TOTAL	Class SI	
RCP DIA.	PIPE THICKNESS	WIDTH	x	Y	QTY	LENGTH	S	QTY	LENGTH	Concrete	#5 Epoxy Rebar
(IN)	(IN)	(IN)	(IN)	(IN)	(EACH)	(FT)	(IN)	(EACH)	(FT)	(CU YD)	(LBS)
12*	2.00	32.0	26.00	21.00	4	22.7	8 1/8	12.0	18.0	0.42	42.5
15*	2.25	35.5	29.50	22.75	4	25.0	9 3/8	12.0	18.0	0.49	44.8
18*	2.50	39.0	33.00	24.50	4	27.3	10 1/2	12.0	18.0	0.57	47.2
21*	2.75	42.5	36.50	26.25	4	29.7	8 3/4	16.0	24.0	0.65	56.0
24	3.00	46.0	40.00	28.00	4	32.0	9 5/8	16.0	24.0	0.72	58.4
27	3.25	49.5	43.50	29.75	4	34.3	10 1/2	16.0	24.0	0.81	60.8
30	3.50	53.0	47.00	31.50	4	36.7	11 3/8	16.0	24.0	0.89	63.3
33	3.75	56.5	50.50	33.25	4	39.0	9 4/5	20.0	30.0	0.98	72.0
36	4.00	60.0	54.00	35.00	4	41.3	10 1/2	20.0	30.0	1.07	74.4
42	4.50	67.0	61.00	38.50	4	46.0	9 7/8	24.0	36.0	1.26	85.5
48	5.00	74.0	68.00	42.00	4	50.7	11 1/8	24.0	36.0	1.46	90.4

*Note: Option to use without Rebar

STANDARD REVISIONS	
DATE	DESCRIPTION
1/22/14	APPROVED PLAN

PERCENT COMPLETE	DATE
30	
60	
75	
90	
100	
BULLETIN	

CITY OF CHICAGO
DEPARTMENT OF WATER MANAGEMENT
BUREAU OF ENGINEERING SERVICES

CONCRETE COLLAR / CONNECTION DETAILS

DRAWN: SBW
DESIGNED:
CHECKED:
REVIEWED:

A.14

OF

PN

AECOM
303 EAST WACKER DRIVE, SUITE 1400
CHICAGO, IL 60601-5276
PHONE: (312) 373-7700 FAX: (312) 373-6800

D160W71-sht-CDWM-Detail-08B.dgn	DESIGNED -	REVISED -
USER NAME = chiua	DRAWN -	REVISED -
PLOT SCALE = 2.0000 ' / in.	CHECKED -	REVISED -
PLOT DATE = 2/18/2014	DATE - 02/19/14	REVISED -

STATE OF ILLINOIS
DEPARTMENT OF TRANSPORTATION

CHICAGO DEPARTMENT OF WATER MANAGEMENT
STANDARD DETAILS

SCALE: NTS | SHEET 10 OF 12 SHEETS | STA. TO STA.

F.A.I. RTE.	SECTION	COUNTY	TOTAL SHEETS	SHEET NO.
90/94/290	2013-036R	COOK	256	250B

CONTRACT NO. 60W71

ILLINOIS FED. AID PROJECT

FILE PATH = C:\Users\Chua\Desktop\60W71\D160W71-sht-CDWM-Detail-08B.dgn