CONTRACT NO. 93450

F.A.U. RTE.	SECTION	COUNTY	TOTAL SHEETS	SHEET NO.
7982	*	SANGAMON	114	85
STA.		TO STA.		
FED. ROAD DIST. NO.	ILLINOIS	FED. AID PROJECT		

* 05-00447-01-PV CITY OF SPRINGFIELD

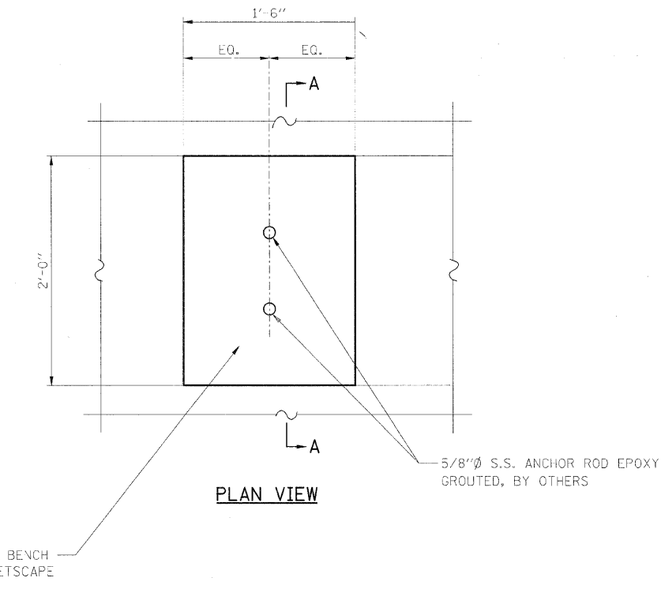

PLAN VIEW

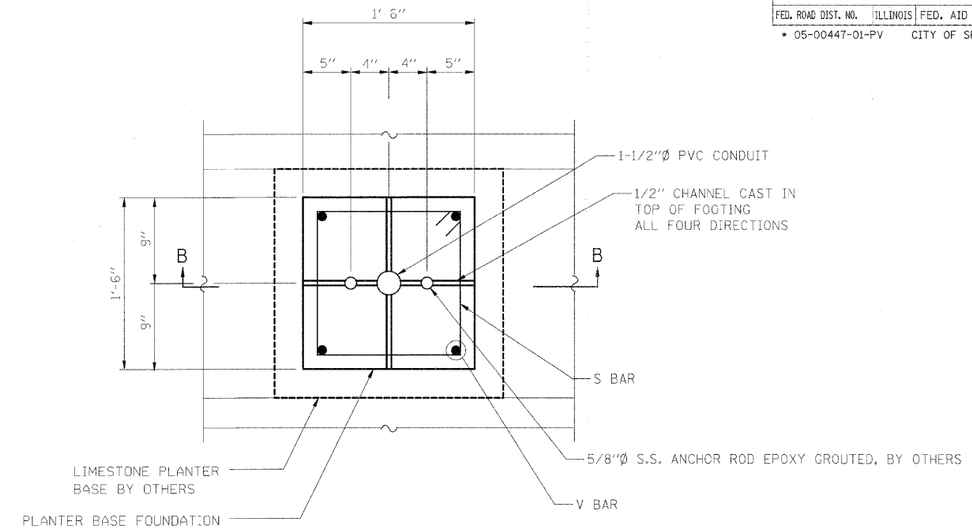

PLAN VIEW

NOTES:
STAINLESS STEEL ANCHOR RODS SHALL MEET THE REQUIREMENTS OF ASTM F593 (AISI 304/316). COST OF S.S. ANCHOR ROD SHALL BE INCLUDED WITH THE LIMESTONE PLANTER. THIS WORK SHALL BE COMPLETED BY OTHERS.

THE DETAILS ON THIS PAGE MAY NOT REPRESENT ACTUAL CONDITIONS. SEE PLAN SHEETS FOR SURROUNDING FEATURES.

COST OF PVC CONDUIT SHALL BE INCLUDED WITH CONCRETE STRUCTURES.

SEE STREETSCAPE PLANS FOR LOCATIONS.

NOTES:
STAINLESS STEEL ANCHOR RODS SHALL MEET THE REQUIREMENTS OF ASTM F593 (AISI 304/316). COST OF S.S. ANCHOR ROD SHALL BE INCLUDED WITH THE LIMESTONE BENCH. THIS WORK SHALL BE COMPLETED BY OTHERS.

ADDITIONAL CONCRETE FOR THE PCC SIDEWALK UNDER THE PLANTER BASE SHALL BE INCLUDED IN THE COST OF PCC SIDEWALK 4".

THE DETAILS ON THIS PAGE MAY NOT REPRESENT ACTUAL CONDITIONS. SEE PLAN SHEETS FOR SURROUNDING FEATURES.

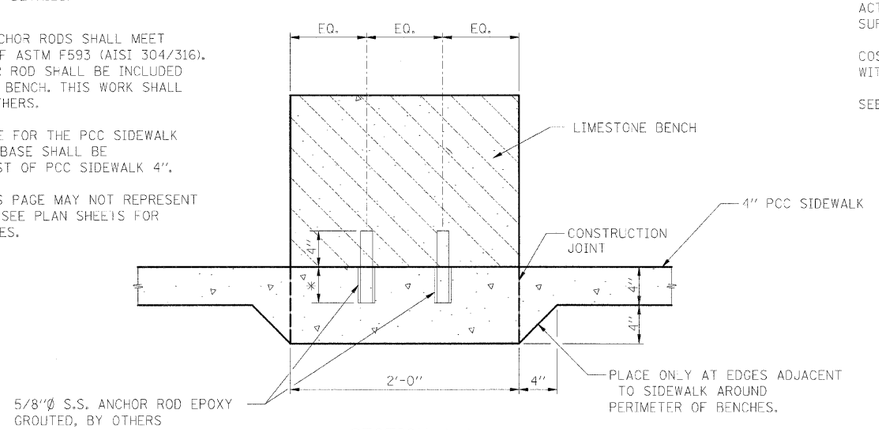

SECTION A-A

* ANCHOR ROD SHALL HAVE AN EMBEDMENT SUFFICIENT TO OBTAIN 1.25 X THE YIELD STRENGTH OF THE ANCHOR ROD.

LIMESTONE BENCH ANCHORAGE DETAILS

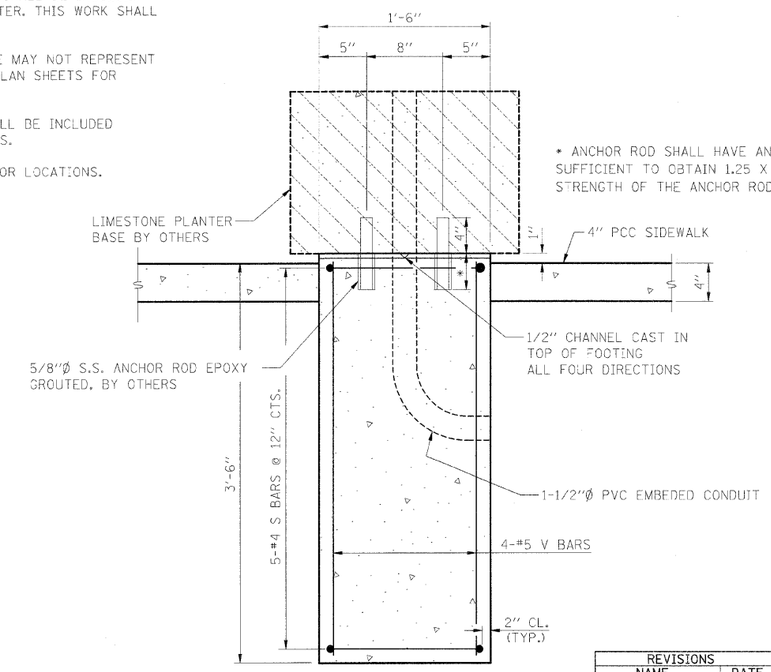

* ANCHOR ROD SHALL HAVE AN EMBEDMENT SUFFICIENT TO OBTAIN 1.25 X THE YIELD STRENGTH OF THE ANCHOR ROD.

SECTION B-B

LIMESTONE PLANTER BASE ANCHORAGE DETAILS

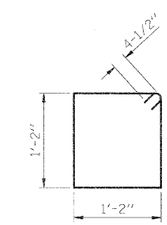

BAR S

BILL OF MATERIAL
ONE PLANTER FOUNDATION ONLY

BAR	NO.	SIZE	LENGTH	SHAPE
S	5	#4	5'-5"	□
V	4	#5	3'-3"	——
Structure Excavation			Cu. Yd.	3.9
Concrete Structures			Cu. Yd.	0.3
Reinforcement Bars			Pound	30

REVISIONS NAME	DATE

ILLINOIS DEPARTMENT OF TRANSPORTATION

MISCELLANEOUS ANCHORAGE DETAILS

FAU RTE 7982 CAPITOL AVE
SEC NO. 05-00447-01-PV
SANGAMON COUNTY, ILLINOIS

SCALE: VERT. HORIZ. DRAWN BY DAB
DATE 09/19/07 CHECKED BY MNM

© Copyright Hanson Professional Services Inc. 2008

HANSON

LAYOUT	DAB	11/27/07
DRAWN	DAB	11/27/07
REVIEWED	MNM	11/27/07

PLOT DATE = 9\13\2008 10:23 AM
FILE NAME = u:\82_projects\82694\enbd\road\microstation\sheet\section_1_74b-118\NC-808_PLANTER BED_BENCH_DET.dgn
PLOT SCALE = 5.68 '/' IN.
USER NAME = Pop08836