F.A.U. RTE.	SECTION	COUNTY	TOTAL SHEETS	SHEET NO.
2744	06-00183-00-CH	COOK	73	73
STA.		TO STA.		
FED. ROAD DIST. NO.	ILLINOIS	FED. AID PROJECT		

CONTRACT NO. 83999

STATE OF ILLINOIS
DEPARTMENT OF TRANSPORTATION

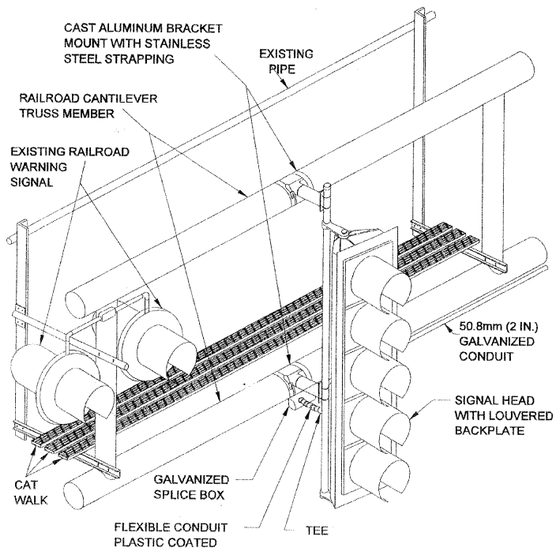

RAILROAD CANTILEVER SIGNAL HEAD MOUNTING

USE NONCONDUCTIVE SPACERS BETWEEN THE TRAFFIC SIGNAL EQUIPMENT AND THE RAILROAD CANTILEVER TO PREVENT DISSIMILAR METAL CORROSION.

N.T.S.

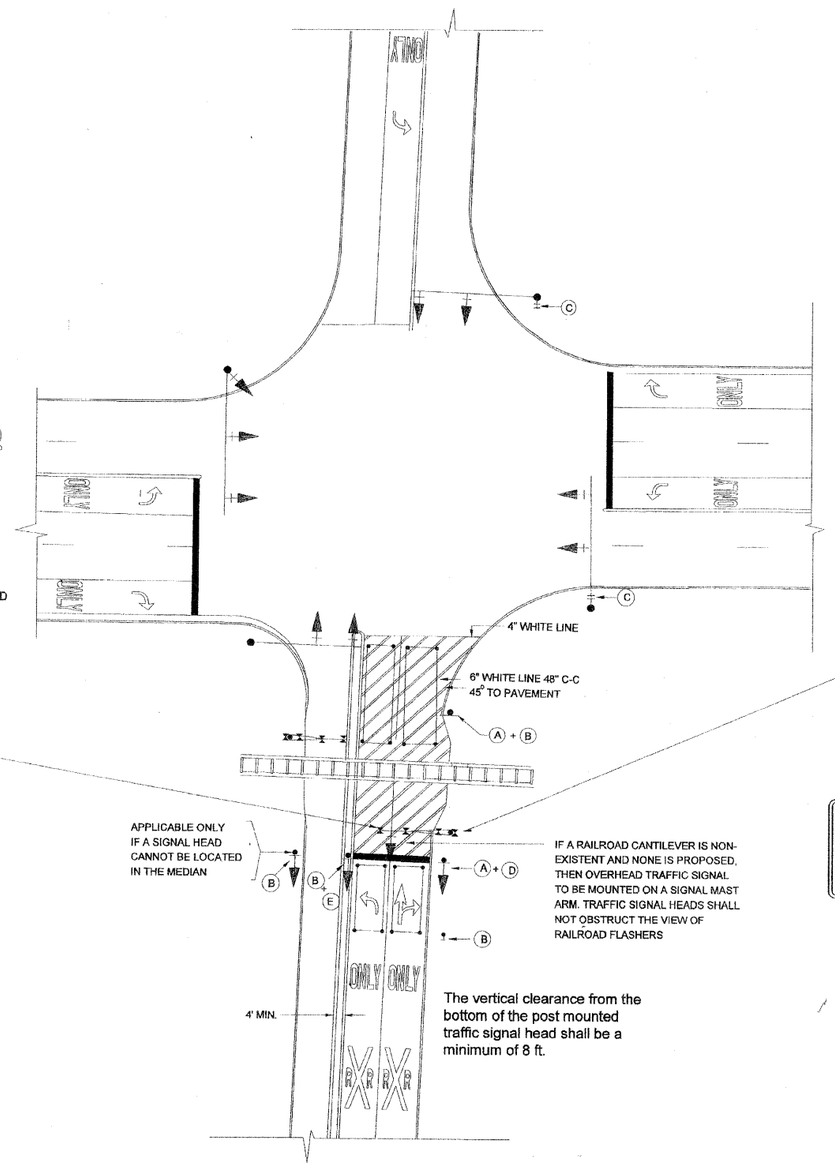

IF A RAILROAD CANTILEVER IS NON-EXISTENT AND NONE IS PROPOSED, THEN OVERHEAD TRAFFIC SIGNAL TO BE MOUNTED ON A SIGNAL MAST ARM. TRAFFIC SIGNAL HEADS SHALL NOT OBSTRUCT THE VIEW OF RAILROAD FLASHERS

The vertical clearance from the bottom of the post mounted traffic signal head shall be a minimum of 8 ft.

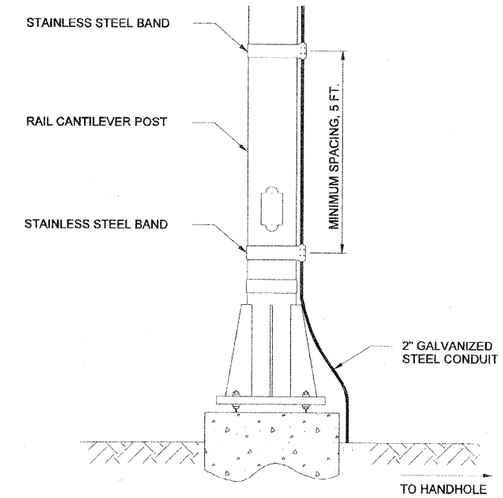

SIGNAL CONDUIT CONNECTION TO RAIL CANTILEVER DETAIL

USE NON-CONDUCTIVE SPACERS BETWEEN THE TRAFFIC SIGNAL EQUIPMENT AND THE RAILROAD CANTILEVER TO PREVENT DISSIMILAR METAL CORROSION.

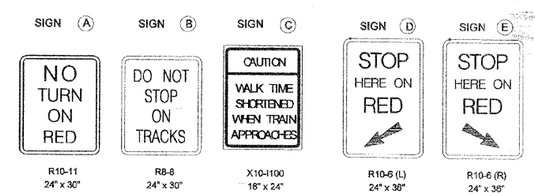

TYPICAL TRAFFIC PRE-SIGNALS AT RAILROAD GRADE CROSSING

BDE PROCUDURE MEMORANDUM 44-05
ATTACHMENT

06/01/05

REVISIONS	
NAME	DATE

BDE PROCEDURE MEMORANDUM 45-05

TYPICAL TRAFFIC PRE-SIGNALS AT RAILROAD GRADE CROSSING

CONSULTANT
TYLIN INTERNATIONAL

VILLAGE OF WILMETTE
GREEN BAY ROAD
INTERSECTION IMPROVEMENTS

DRAWN:	SHEET NO.
CHECKED:	
APPROVED:	
DATE: 02-14-2008	
SCALE: NONE	
JOB NO.:	PROJECT NO.:

PLAN
SURVEYED
PLOTTED
DRAWN BY
CHECKED BY
R.O.W. CHECKED
ALL OF R.O.W. CHECKED
CADD FILE NAME
NOTE BOOK
NO.
BY
DATE

PROFILE
SURVEYED
PLOTTED
DRAWN BY
CHECKED BY
B.M. NOTED
STRUCTURE NOTAT'NS CH'KD
NOTE BOOK
NO.
BY
DATE