CONTRACT NO. 76267

| FAP ROUTE | SECTION | COUNTY | TOTAL SHEETS | SHEET NO |
|---|---|---|---|---|
| 592 | 121-1R, 121HVB | ST. CLAIR | 239 | 121 |
| CURB REFLECTOR AND MARKING DETAILS | | | | |

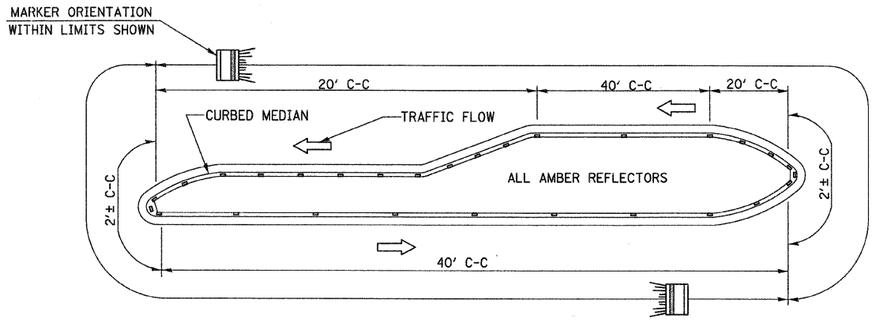


NOTES
1. PRISMATIC REFLECTORS SHALL BE MONO-DIRECTIONAL AND POSITIONED SO THAT THE REFLECTIVE FACE IS FACING THE APPROACHING TRAFFIC.
2. PRISMATIC REFLECTORS SHALL BE SECURED IN PLACE WITH AN EPOXY ADHESIVE.
3. PRISMATIC REFLECTORS SHALL BE EITHER AMBER OR CRYSTAL IN COLOR.

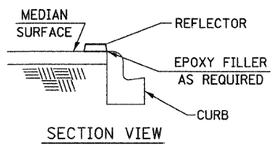


SECTION VIEW

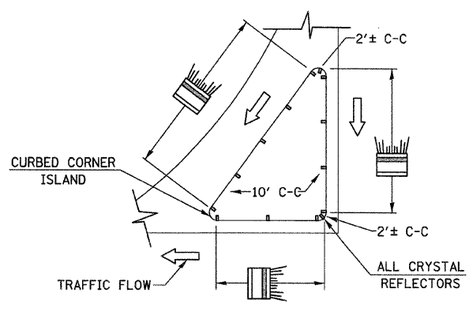


TYPICAL PLACEMENT OF PRISMATIC REFLECTORS ON CURBS

(NO SCALE)

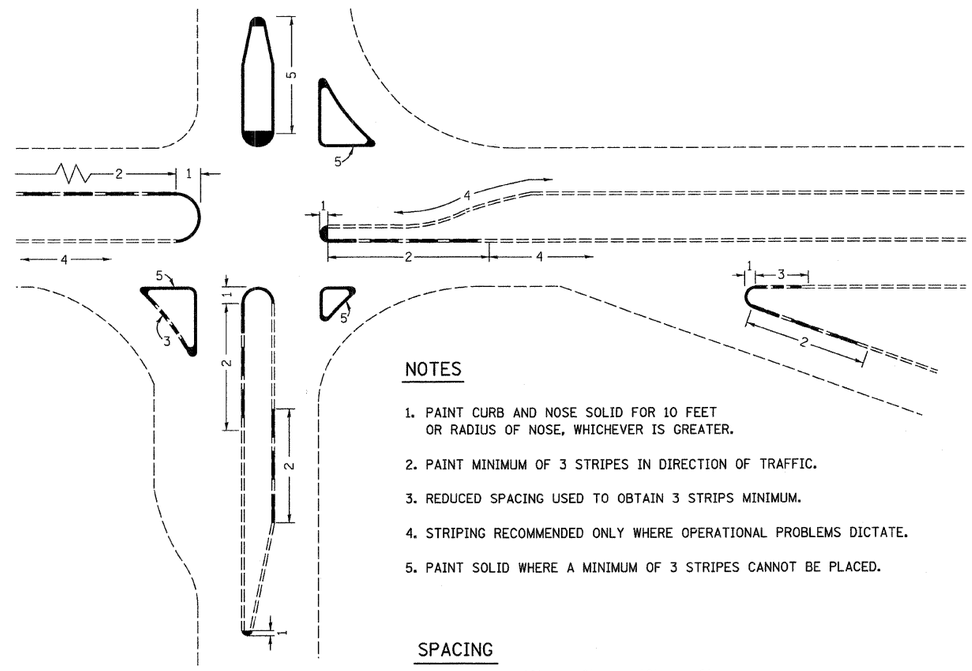


NOTES

1. PAINT CURB AND NOSE SOLID FOR 10 FEET OR RADIUS OF NOSE, WHICHEVER IS GREATER.
2. PAINT MINIMUM OF 3 STRIPES IN DIRECTION OF TRAFFIC.
3. REDUCED SPACING USED TO OBTAIN 3 STRIPS MINIMUM.
4. STRIPING RECOMMENDED ONLY WHERE OPERATIONAL PROBLEMS DICTATE.
5. PAINT SOLID WHERE A MINIMUM OF 3 STRIPES CANNOT BE PLACED.

SPACING

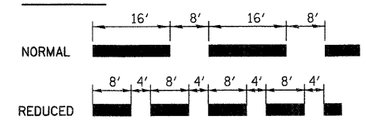


CURB MARKING

| REVISIONS | |
|---|---|
| NAME | DATE |
| | |
| | |
| | |
| | |
| | |
| | |
| | |

ILLINOIS DEPARTMENT OF TRANSPORTATION

PRISMATIC REFLECTORS ON CURBS & CURB MARKING DETAILS

FAP ROUTE 592
SECTION 121-1R, 121HVB
ST. CLAIR COUNTY

DRAWN BY:

| PLAN | | BY | DATE |
|---|---|---|---|
| | SURVEYED | | |
| | PLOTTED | | |
| | ALIGNMENT CHECKED | | |
| | RT. OF WAY CHECKED | | |
| NOTE BOOK NO. | CADD FILE NAME | | |

PLOT DATE = 8/21/2007
FILE NAME = N:\0592B05\Microstat\Design\psk0811a.dgn
PLOT SCALE = 50.0000 ' / IN.
USER NAME = $USER$