ROUTE NO.	SECTION	COUNTY	TOTAL SHEETS	SHEET NO.
FAI 74	★	VERMILION	71	44
FED. ROAD DIST. NO. 7		ILLINOIS	FED. AID PROJECT-	

★ (10-92-8HB-4)BR

SHEET NO. 15
17 SHEETS

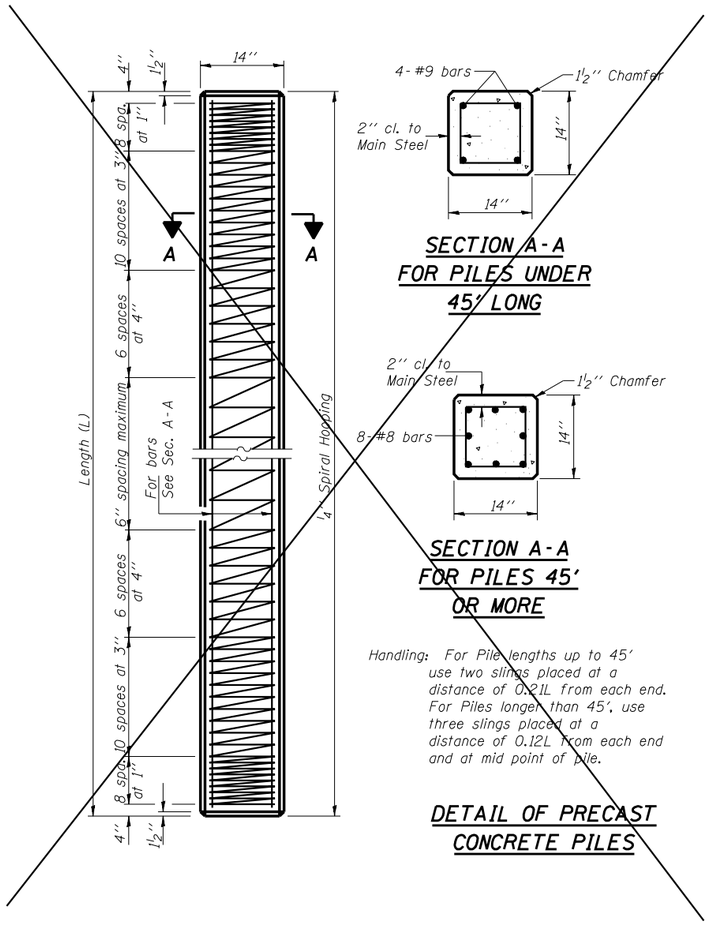

Handling: For Pile lengths up to 45' use two slings placed at a distance of 0.21L from each end. For Piles longer than 45', use three slings placed at a distance of 0.12L from each end and at mid point of pile.

DETAIL OF PRECAST CONCRETE PILES

Notes: Driving and bearing ends of pipe shall be cut square. The thickness of the shell shall be 0.250 inches with a tolerance of 5 % . The shell shall be according to Article 1006.05(a) of the Standard Specifications.

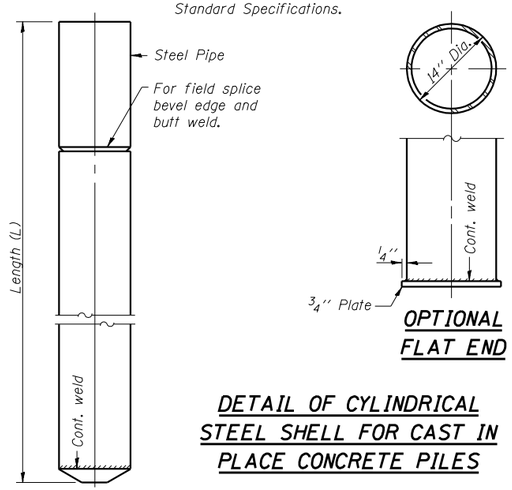

OPTIONAL FLAT END

DETAIL OF CYLINDRICAL STEEL SHELL FOR CAST IN PLACE CONCRETE PILES

Note: Metal Shell Piles shall be according to ASTM A 252 Grade 3.

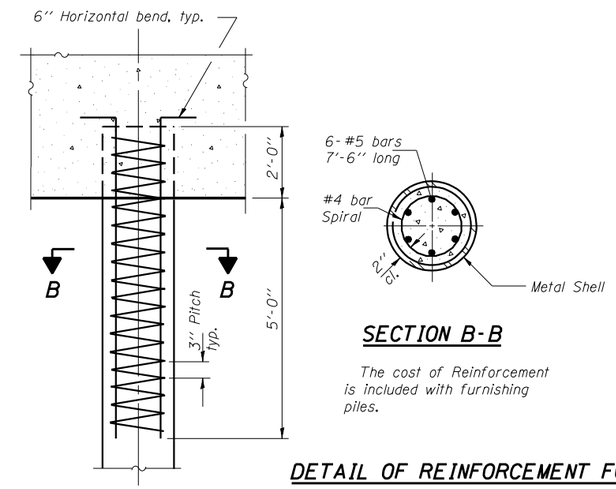

SECTION B-B

The cost of Reinforcement is included with furnishing piles.

DETAIL OF REINFORCEMENT FOR METAL SHELLS AT ABUTMENTS

X-PB 4-30-97

LIN ENGINEERING, LTD.
210 W. Chestnut (217) 483-468
Chatham, Illinois 62629 FAX (217) 483-4706
Designed By: MTH | Checked By: STD | Drawn By: JMD
Date: 11/02 | File: 092020 3.DGN

REVISIONS	
NAME	DATE

ILLINOIS DEPARTMENT OF TRANSPORTATION

PILE DETAIL
FAP ROUTE 840 (IL 49N)
OVER FAI RTE 74 (I-74)
SECTION (10-92-8HB-4) BR
VERMILION COUNTY
STA. 1160+20.53 (I-74)
STA. 50+00.00 (IL 49N)
STRUCTURE NO. 092-0203