CONTRACT NO. 68692

F.A.P. RTE.	SECTION	COUNTY	TOTAL SHEETS	SHEET NO.
310	(39B)1	McDONOUGH	38	21
STA.		TO STA.		
FED. ROAD DIST. NO.	ILLINOIS	FED. AID PROJECT		

SHEET 12 OF 12 SHEETS

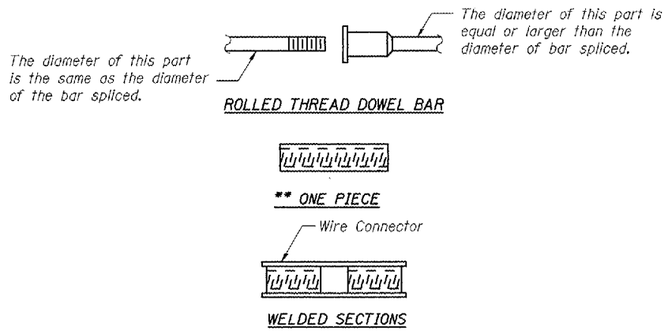

BAR SPLICER ASSEMBLY ALTERNATIVES

** Heavy Hex Nuts conforming to ASTM A 563, Grade C, D or DH may be used.

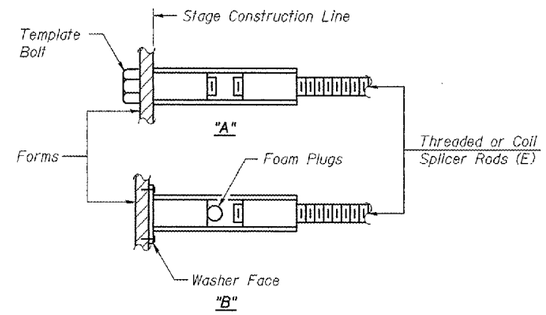

INSTALLATION AND SETTING METHODS

"A" : Set bar splicer assembly by means of a template bolt.
"B" : Set bar splicer assembly by nailing to wood forms or cementing to steel forms.
(E) : Indicates epoxy coating.

NOTES

Bar splicer assemblies shall be of an approved type and shall develop in tension at least 125 percent of the yield strength of the lapped reinforcement bars.

Splicer rods shall be of minimum 60 ksi yield strength, threaded or coiled full length.

All reinforcement bars shall be lapped and tied to the splicer rods or dowel bars.

Bar splicer assemblies shall be epoxy coated according to the requirements for reinforcement bars.

Other systems of similar design may be submitted to the Engineer for approval. Approval shall be based on certified test results from an approved testing laboratory that the proposed bar splicer assembly satisfies the following requirements:

1. Minimum Capacity (Tension in kips) = $1.25 \times fy \times A_t$
2. Minimum *Pull-out Strength (Tension in kips) = $0.66 \times fy \times A_t$

Where fy = Yield strength of lapped reinforcement bars in ksi.
A_t = Tensile stress area of lapped reinforcement bars.
* = 28 day concrete

BAR SPLICER ASSEMBLIES			
Bar Size to be Spliced	Splicer Rod or Dowel Bar Length	Strength Requirements	
		Min. Capacity kips - tension	Min. Pull-Out Strength kips - tension
#4	1'-8"	14.7	7.9
#5	2'-0"	23.0	12.3
#6	2'-7"	33.1	17.4
#7	3'-5"	45.1	23.8
#8	4'-6"	58.9	31.3
#9	5'-9"	75.0	39.6
#10	7'-3"	95.0	50.3
#11	9'-0"	117.4	61.8

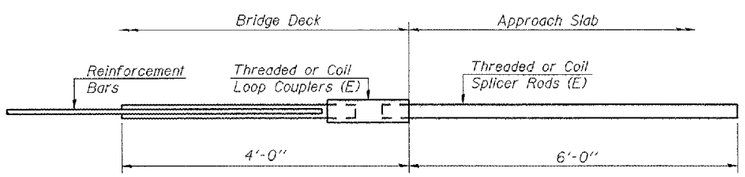

FOR INTEGRAL OR SEMI-INTEGRAL ABUTMENTS

Bar Splicer for #5 bar
Min. Capacity = 23.0 kips - tension
Min. Pull-out Strength = 12.3 kips - tension
No. Required =

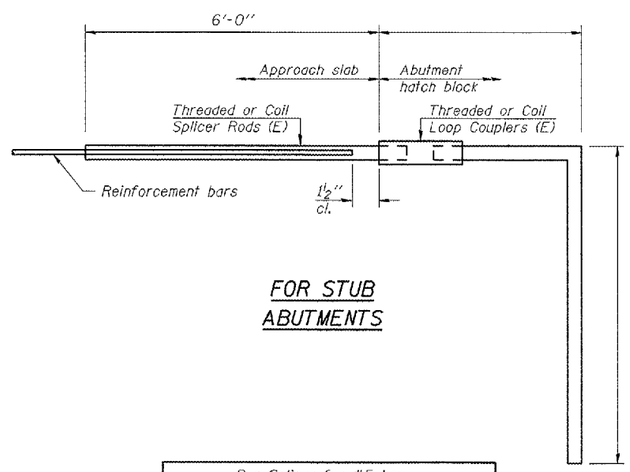

FOR STUB ABUTMENTS

Bar Splicer for #5 bar
Min. Capacity = 23.0 kips - tension
Min. Pull-out Strength = 12.3 kips - tension
No. Required =

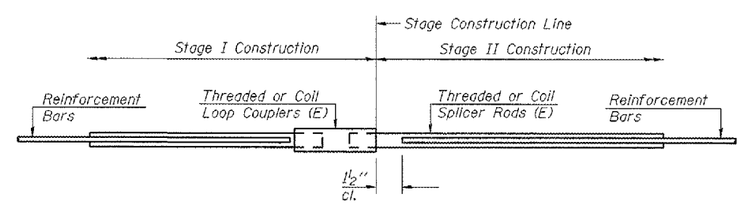

STANDARD

Bar Size	No. Assemblies Required	Location Concrete
#4	117	Wearing Surface

REVISIONS	
NAME	DATE

ILLINOIS DEPARTMENT OF TRANSPORTATION

BAR SPLICER ASSEMBLY DETAILS
US 67 OVER TROUBLESOME CREEK
FAP 310 SECTION (39B)1
McDONOUGH COUNTY STR. 055-0005

SCALE: N.T.S. DRAWN BY GEW
DATE DEC 2007 CHECKED BY MJS

TUG PROJ.# 3187B12-01
PLOT DATE = 1/18/2008 10:14:21 AM
FILE NAME = P:\MDOT\Stewart\Troublesome Creek\CADD\Upchurch working Files\Bridge\BarSplicerDetail.dgn

THE UPCHURCH GROUP, INC.