CONTRACT NO. 68115

F.A.S. RTE.	SECTION	COUNTY	TOTAL SHEETS	SHEET NO.
2244	(107B)BR	STARK	39	30
STA.		TO STA.		
FED. ROAD DIST. NO.	ILLINOIS	FED. AID PROJECT		

DESIGNER NOTE:
1. Use EROSION CONTROL CURB at guardrail installations where grades are equal to or greater than 1% and at inlets. (Include District Special Provision)
2. Use GUARDRAIL AGGREGATE EROSION CONTROL at guardrail installations where grades are less than 1% (Include District Special Provision)
3. Include State Standards 609001, 609006 or 610001 if applicable.
4. Include the following District Cadd Standards as needed: Slope Drains for Exposed Pipes; Slope Drains for Buried Pipes; Seepage Collars for Exposed Pipes; Concrete Thrust Blocks and Pipe Elbow.
5. Include District Special Provision -"Aggregate Quality" for projects located in the Western Area of the District - approx. dividing line is IL 97.

1/21/2008

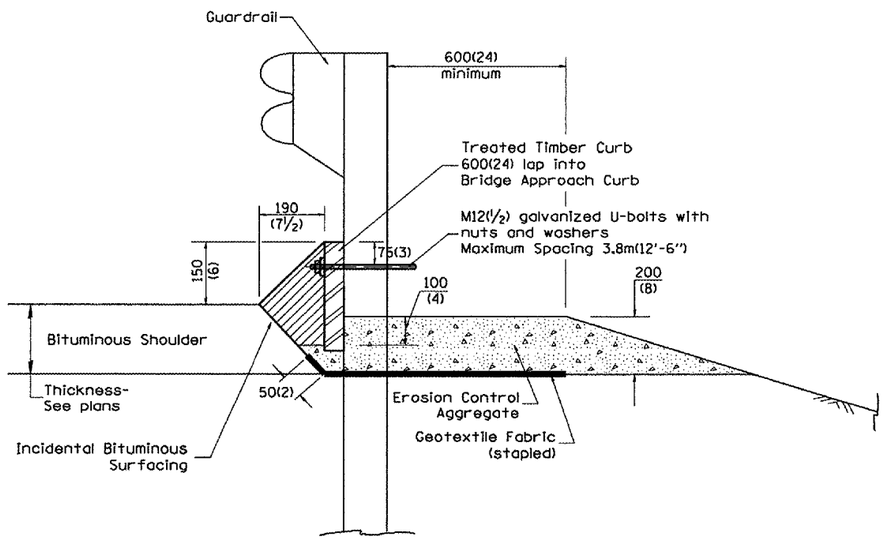

TYPICAL SECTION WITH EROSION CONTROL CURB

NOT APPLICABLE

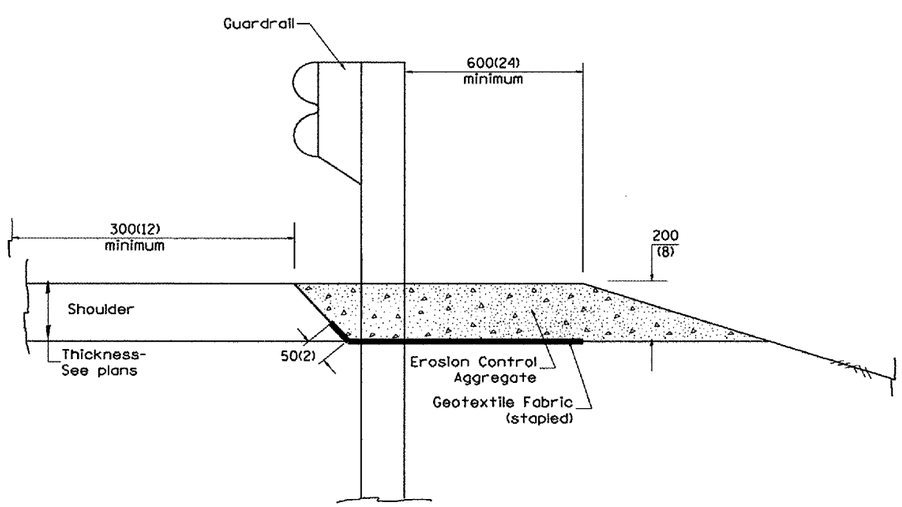

TYPICAL SECTION WITHOUT EROSION CONTROL CURB

GENERAL NOTES: EROSION CONTROL CURB

1. This work shall consist of grading as needed, installing hardware and treated timber boards, furnishing and placing mastic material and incidental bituminous surfacing in front of Steel Plate Beam Guardrail in accordance with Plan Details.

2. Timber shall be treated in accordance with Article 1007.12. All preservatives specified in the article will be allowed. Waterborne preservatives "asa" and "cca" shall have a minimum retention of 6.4 kg/m^3 (0.40 lbs./cu. ft.)

GENERAL NOTES: GUARDRAIL AGGREGATE EROSION CONTROL

1. This work shall consist of grading as needed, furnishing and installing geotextile fabric and staples, and furnishing, placing and shaping crushed aggregate around and behind Steel Plate Beam Guardrail posts in accordance with Plan Details.

2. Before placing the aggregate and the Geotextile Fabric, weeds and grass shall be removed from the area to be covered.

3. After the area has been prepared, and in a dry condition, the Geotextile fabric shall be placed with a 300(12) minimum overlap. A knife cut for guardrail post installation is necessary.

4. The aggregate shall be deposited, compacted and shaped by either mechanical or hand methods, in a manner reasonably true to line and grade.

5. The Contractor shall have the option of placing the guardrail before or after the Geotextile Fabric and Aggregate are in place. If the guardrail is placed after the Geotextile Fabric and Aggregate, then any voids must be filled and the aggregate returned to line and grade.

6. Materials shall meet the following requirements:

A. The crushed aggregate shall be CA1 gradation in accordance with Article 1004.01(c) of the Standard Specifications.

B. The Geotextile Fabric shall be nonwoven fabric in accordance with Article 1080.02 of the Standard Specifications.

All dimensions are in millimeters (inches) unless otherwise noted.

DATE	REVISIONS	BY
1-1-97	RENUM. C-22.D1, NEW REVISION BOX	T.P.
3-1-97	CORRECT STD. NUMBERS IN NOTES PG. 2	J.A.
11-3-00	CORRECTION TO NOTES	M.A.

ILLINOIS DEPARTMENT OF TRANSPORTATION

DISTRICT CADD STANDARD

GUARDRAIL EROSION CONTROL TREATMENTS

CADD STD NO. 630101-D4(1)
SCALE: NOT DRAWN TO SCALE
DATE 1/21/2008

SHEET 1 OF 2
DRAWN BY CADD
CHECKED BY

630101-D4(1)

DGN-ONLY

.../Dwa/D4 Details.dgn 1/21/2008 1:15:36 PM