STATE OF ILLINOIS
DEPARTMENT OF TRANSPORTATION

ROUTE NO.	SECTION	COUNTY	TOTAL SHEETS	SHEET NO.
FAP 634	138T	HENRY	42	16A
FED. ROAD DIST. NO. 7	ILLINOIS	FED. AID PROJECT-		

SHEET NO. 2
2 SHEETS

Contract #64A77

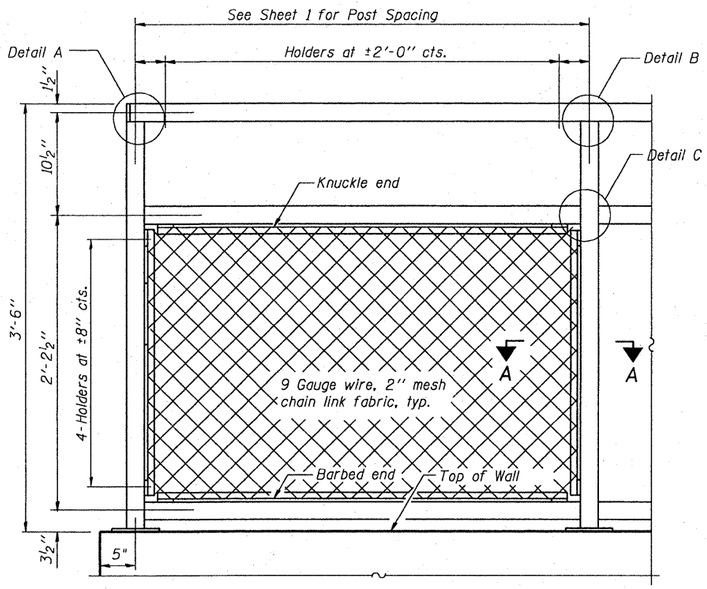

RAILING

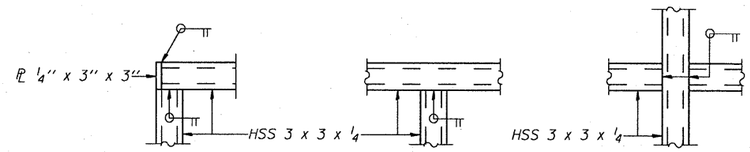

DETAIL A DETAIL B DETAIL C

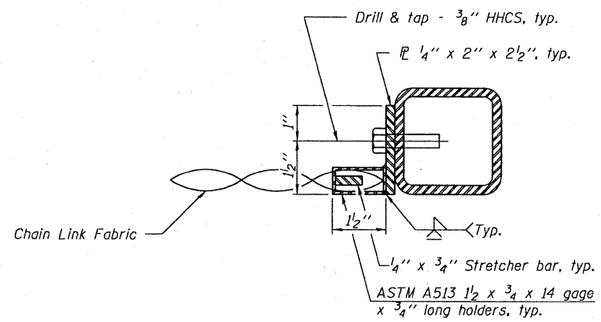

SECTION A-A

NOTES:

1. All steel rail elements shall be galvanized according to Article 509.05 of the Standard Specifications.
2. All handrail dimensions shall be verified by Contractor prior to fabrication, based upon final location of mounting bolts.
3. Handrail shall conform to Section 509 with the exception that all tubes and connections shall be welded galvanized or aluminum according to Article 1006.27, 1006.30, or 1006.34.
4. Hand and safety rails shall not rotate within their fittings.
5. The contract unit price for Steel Railing shall include railing, chain link fence, anchor rods, anchor bolts, bolts, nuts, washers, and steel base plates.

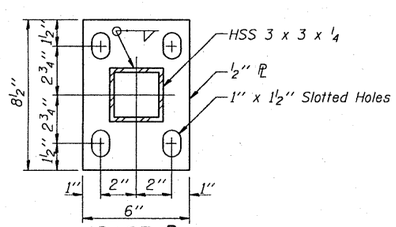

BASE PL

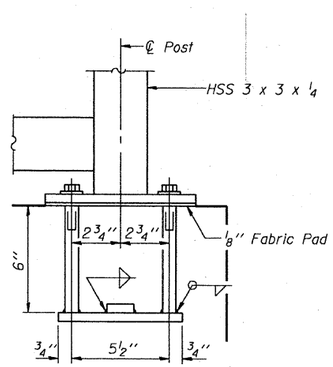

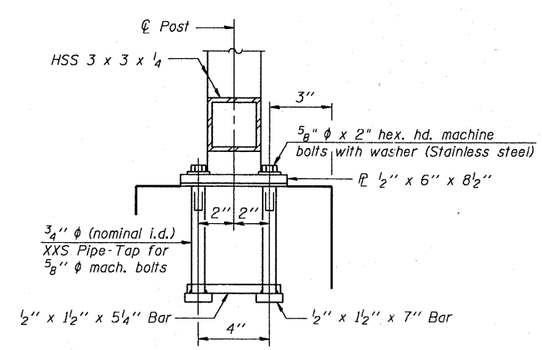

ANCHOR BOLT DETAILS

In lieu of the cast-in-place anchor device shown, the Contractor has the option of drilling and setting ⅝" ϕ anchor rods according to Article 509.06 of the Standard Specifications. Embedment shall be according to the manufacturer's specifications.

9-3-07 (10'-0" Maximum Post Spacing)

DESIGNED	- EKM
CHECKED	- SCD
DRAWN	- AL
CHECKED	- EKM

R-29

Ciorba Group, Inc.
CONSULTING ENGINEERS
5507 North Cumberland Avenue, Suite 402 Chicago, Illinois 60656
Tel. 773.775.4009 Fax 773.775.4014 Email chicago@ciorba.com

RAILING
F.A.P. 634 (ILLINOIS 82)
SECTION 138T
HENRY COUNTY
STATION 432+94.78
S.N. 037-1182

1/18/2008 rdenley
N:\PROJ\3317\3317.05\Design\Structural\CAD\d03317spltrail.dgn