F.A.I.	SECTION	COUNTY	TOTAL SHEETS	SHEET NO.
94/90	*	COOK	37	17
STA.		TO STA.		
FED. ROAD DIST. NO.	ILLINOIS	FED. AID PROJECT		

62992 * (2323.6-2P&2324.6-1P)I

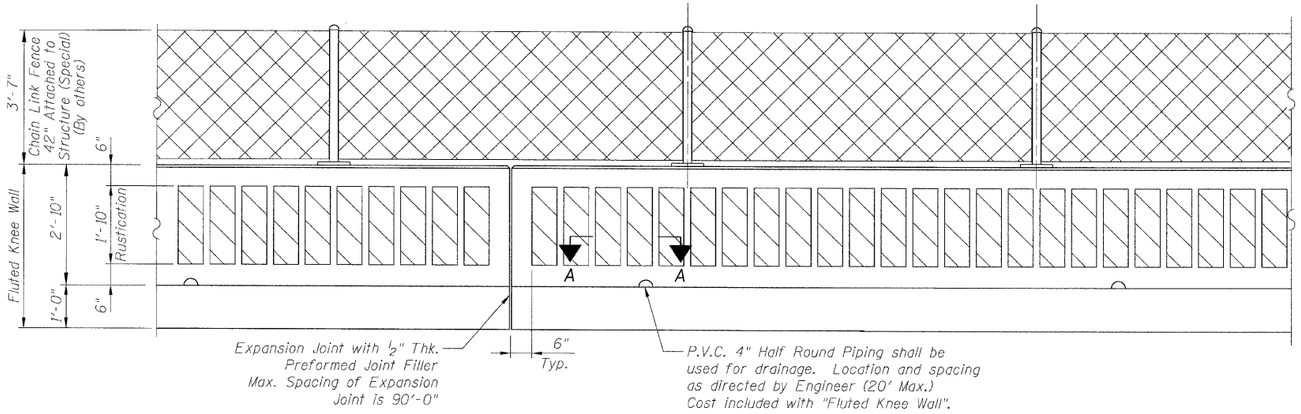

BACK FACE ELEVATION - FLUTED KNEE WALL

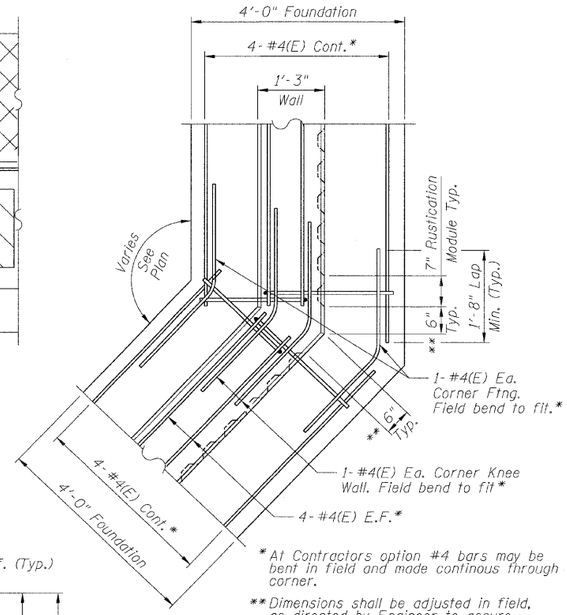

* At Contractors option #4 bars may be bent in field and made continous through corner.

** Dimensions shall be adjusted in field, as directed by Engineer to assure rustication is not provided at corner.

TYPICAL FLUTED KNEE WALL CORNER DETAIL

BILL OF MATERIAL

Item	Unit	Qty.*
Concrete Structures	Cu. Yd.	0.15
Concrete Superstructure	Cu. Yd.	0.13
Reinforcement Bars, Epoxy Coated	Pound	22.69
Rustication Finish	Sq. Ft.	1.83
Protective Coat	Sq. Yd.	0.62

* Quantities are per foot of Fluted Knee Wall and are provided for estimating purposes only. See Note 5.

NOTES:

1. Back Face is face adjacent to Frontage Rd. and Front Face is face adjacent to Expressway.
2. Concrete: f'c = 3500 psi
3. Provide California Finish on top of foundation between stem and Frontage Road. See Roadway Details. Cost included with "Fluted Knee Wall".
4. At locations where Fluted Knee Wall abuts a rigid Structure, a 1" thick Preformed Expansion Joint Filler conforming to the shape of the Structure shall be installed between the Wall and the Structure.
5. "Fluted Knee Wall" shall include Concrete Superstructure stem, Concrete Structures foundation, Reinforcement Bars, Epoxy Coated, all form liners for Rustication Finish, Protective Coat and Preformed Joint Filler (P.J.F.).
6. Apply Protective Coat to top and front face of stem and top of Frontage Road side of foundation.
7. Cost included with "Fluted Knee Wall."
8. Chain Link Fence 42" Attached to Structure (Special) will not be paid for in this Contract, but shall be furnished and installed in a future Contract by others.
9. See Roadway Plans for limits of excavation for Fluted Knee Wall.

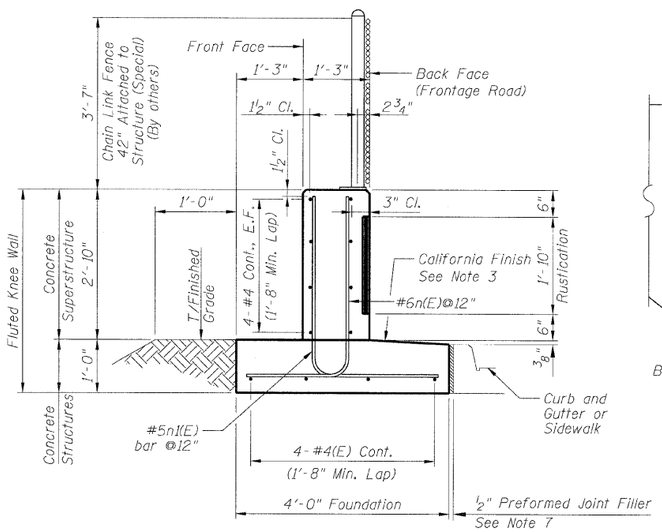

TYPICAL SECTION FLUTED KNEE WALL

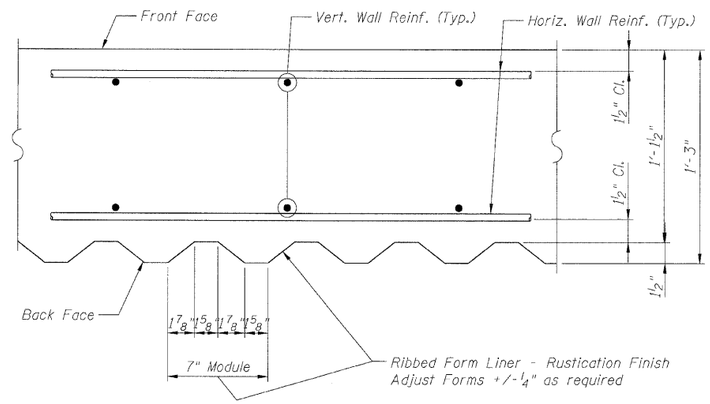

SECTION A-A

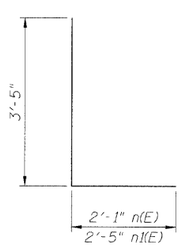

BARS n(E) & n1(E)

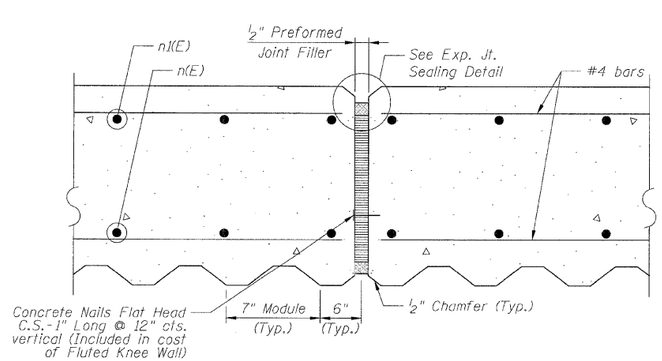

EXPANSION JOINT DETAIL

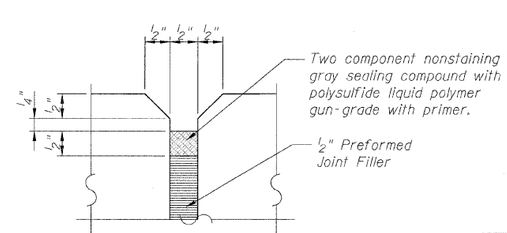

EXPANSION JOINT SEALING DETAIL

LEGEND:

Chain Link Fabric

Rustication Finish

E.F. = Each Face

BOWMAN, BARRETT & ASSOCIATES INC.
CONSULTING ENGINEERS
Chicago, Illinois
312.228.0100
www.bbandainc.com

SHEET SD-1

REVISIONS	
NAME	DATE
REVISED	3-6-08

ILLINOIS DEPARTMENT OF TRANSPORTATION

F.A.I. 94/90 (DAN RYAN EXPRESSWAY)

NORTHBOUND KNEE WALLS (PERSHING RD TO 35TH ST)

FLUTED KNEE WALL

SCALE: N.T.S. DRAWN BY: LAM

DATE: 03/06/08 CHECKED BY: BLU

3/6/2008 7:16:33 PM

N:\660\cadd\dwh3\ESHEETS\660_3\ESw50.dgn