F.A.P. RTE.	SECTION	COUNTY	TOTAL SHEETS	SHEET NO.
374	3268F-R-1	COOK	279	173
STA.		TO STA.		
FED. ROAD DIST. NO.	ILLINOIS	FED. AID PROJECT		

CONTRACT NO. 62387

TEMPORARY CABLE PLAN LEGEND

- TEMPORARY TRAFFIC SIGNAL SECTION OR PEDESTRIAN SIGNAL SECTION 12" (300mm)
- 12" (300mm) PEDESTRIAN SIGNAL SECTION
- TEMPORARY CONTROLLER CABINET
- TEMPORARY UNINTERRUPTIBLE POWER SUPPLY
- TEMPORARY SERVICE INSTALLATION
- EMERGENCY VEHICLE LIGHT DETECTOR
- CONFIRMATION BEACON
- PUSH-BUTTON DETECTOR
- VIDEO VEHICLE DETECTOR
- (2) DENOTES NUMBER OF CONDUCTORS ALL CABLE NO. 14 EXCEPT AS INDICATED ALL LOOP DETECTOR CABLE TO BE SHIELDED
- (24) FIBER OPTIC CABLE NO. 62.5/125 MMI2F SMI2F
- (V) VIDEO DETECTOR CABLE PER VIDEO SYSTEM MANUFACTURER'S RECOMMENDATION
- GROUND ROD

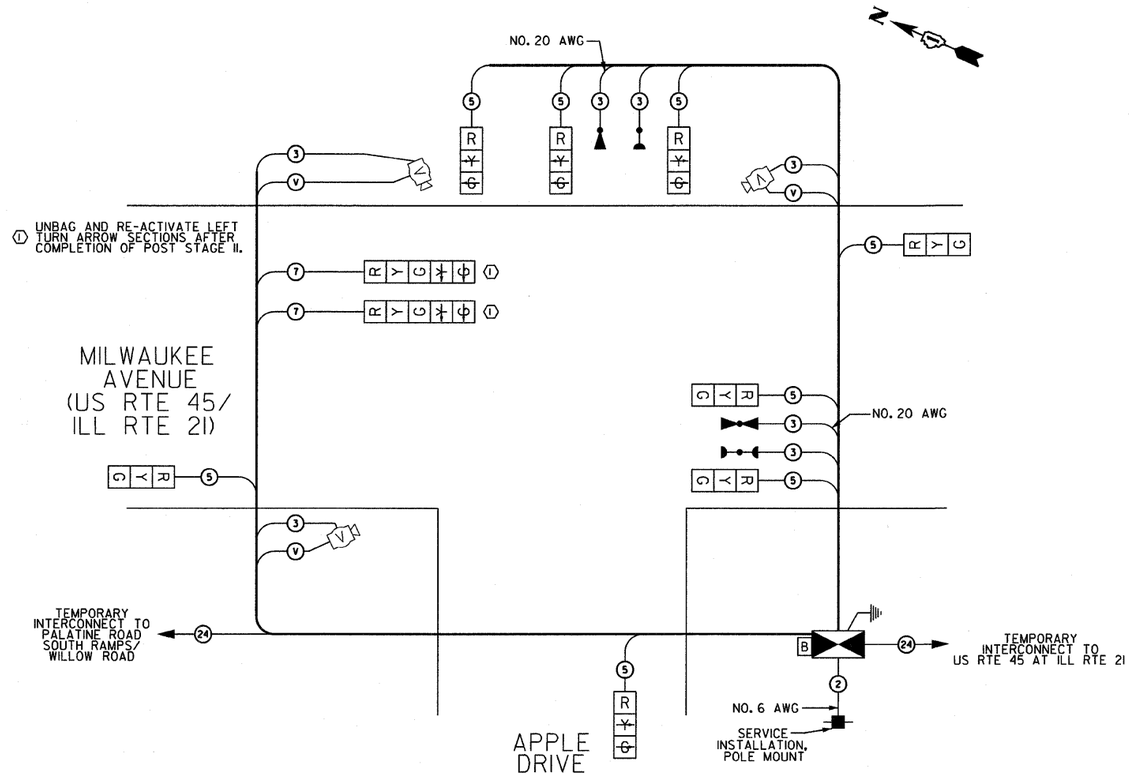

TEMPORARY CABLE PLAN

CONTROLLER SEQUENCE

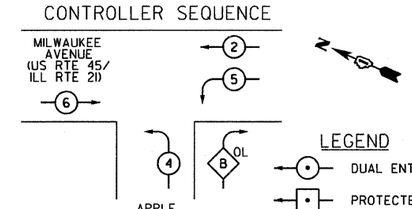

TEMPORARY PHASE DESIGNATION DIAGRAM

LEGEND

- DUAL ENTRY PHASE
- PROTECTED LEFT TURN PHASE
- OVERLAP
- PEDESTRIAN PHASE
- • NUMBER REFERS TO ASSOCIATED PHASE

OVERLAP LETTER		PERMISSIVE PHASE		PROTECTED PHASE
B	=	4	+	5

EMERGENCY VEHICLE PRIORITY SEQUENCE

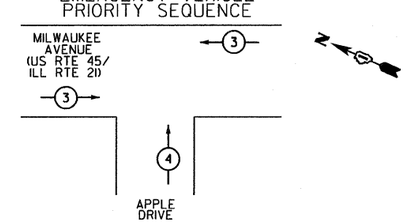

EMERGENCY VEHICLE PREEMPTORS		
EMERGENCY VEHICLE PREEMPTOR	3	4
MOVEMENT	←→	↑

I.D.O.T. TRAFFIC SIGNAL INSTALLATION ELECTRICAL SERVICE REQUIREMENTS					TOTAL WATTAGE
TYPE	NO. OF LAMPS	WATTAGE INCAND.	WATTAGE LED	% OPERATION	
SIGNAL (RED)	10	135	17	0.50	85
(YELLOW)	10	135	25	0.25	62.5
(GREEN)	10	135	15	0.25	37.5
ARROW	4	135	12	0.10	4.8
PED. SIGNAL		90	25	1.00	
CONTROLLER	1	100	100	1.00	100
ILLUM. SIGN		252		0.05	
FLASHER				0.50	
ENERGY COSTS TO:				TOTAL =	289.8

CITY OF PROSPECT HEIGHTS
8 NORTH ELMHURST ROAD
PROSPECT HEIGHTS, ILLINOIS 60070

ENERGY SUPPLY: CONTACT: MS. JUDY SCHOMER
PHONE: (847) 870-2056
COMPANY: COMED

FOUNDATION (DEPTH)	FT.	(m)	CABLE SLACK	FT.	(m)	VERTICAL	FT.	(m)
TYPE A - POST	4	(1.2)	HANDHOLE	6.5	(2.0)	ALL FOUNDATIONS	3.5	(1.0)
D - CONTROLLER	4	(1.2)	DOUBLE HANDHOLE	13	(4.0)	MAST ARM (L) POLE	20'+L-2=	
E - M. ARM POLE			SIGNAL POST	2	(1.0)		(6m+L-0.6m)=	
24" (600 mm)	10	(3.0)	CONTROLLER CAB.	1	(0.5)	BRACKET MOUNTED	13	(4.0)
30" (750 mm)	15	(4.6)	FIBER OPTIC	13	(4.0)	PED PUSHBUTTON	4	(1.2)
			ELECTRIC SERVICE	1	(0.5)	ELECTRIC SERVICE	13.5	(4.1)
			GROUND CABLE	1	(0.5)	SERVICE TO GROUND	13.5	(4.1)
						POST MOUNTED	6	(1.8)

NOTE:
THE TEMPORARY TRAFFIC SIGNAL CONTROL EQUIPMENT FOR THIS INTERSECTION SHALL BE "ECONOLITE" BRAND TO MATCH THE EXISTING SYSTEM.

NOTE:
THE POST-CONSTRUCTION STAGE IS THE PERIOD AFTER ALL LANES HAVE BEEN CONSTRUCTED AND OPENED TO TRAFFIC, BUT BEFORE THE NEW PERMANENT TRAFFIC SIGNAL HAS BEEN ACTIVATED.

TS-13 OF 39

SPAAN Tech, Inc.
311 S. Wacker Drive, Suite 2400
Chicago, Illinois 60606
phone: 312.277.8800
fax: 312.277.8808
web: www.SpaanTech.com

REVISIONS	
NAME	DATE

ILLINOIS DEPARTMENT OF TRANSPORTATION

TEMPORARY CABLE PLAN AND
TEMPORARY PHASE DESIGNATION DIAGRAM
MILWAUKEE AVENUE (US RTE 45/ILL RTE 21)
AT APPLE DRIVE
POST-CONSTRUCTION

SCALE: NONE
DATE: 02/05/08
DRAWN BY: RAS
DESIGN BY: RAS
CHECKED BY: ADO

default
untitled
07617.000
p:\76200 - ILL Rte 21 IDOT Dist 1\Working Files\Drawing Files\Sht\FindTS\TS-13.dgn
1/30/2008 9:36:44 AM
20.0000 ft / IN.