ROUTE	SECTION	COUNTY	TOTAL SHEETS	SHEET NO.
TR 265	04-01183-00-BR	UNION	10	6
PROJECT NO. BROS-181(30)		CONTRACT NO. 99252		

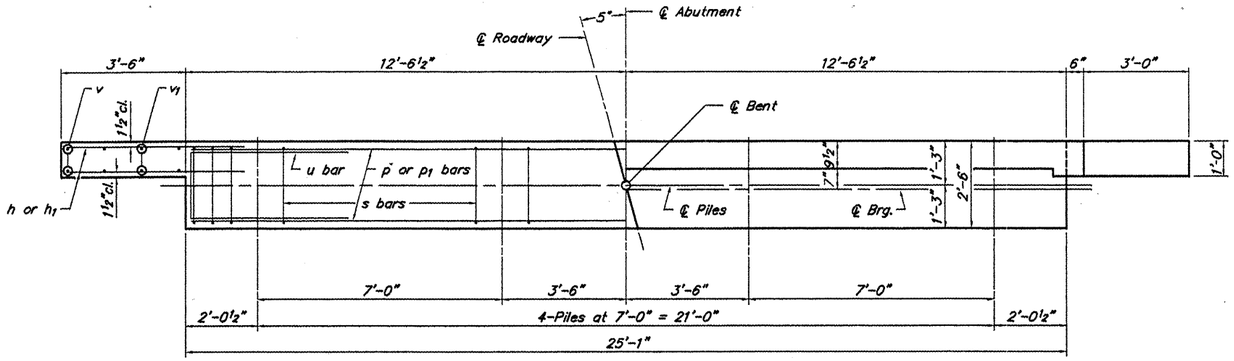

PLAN

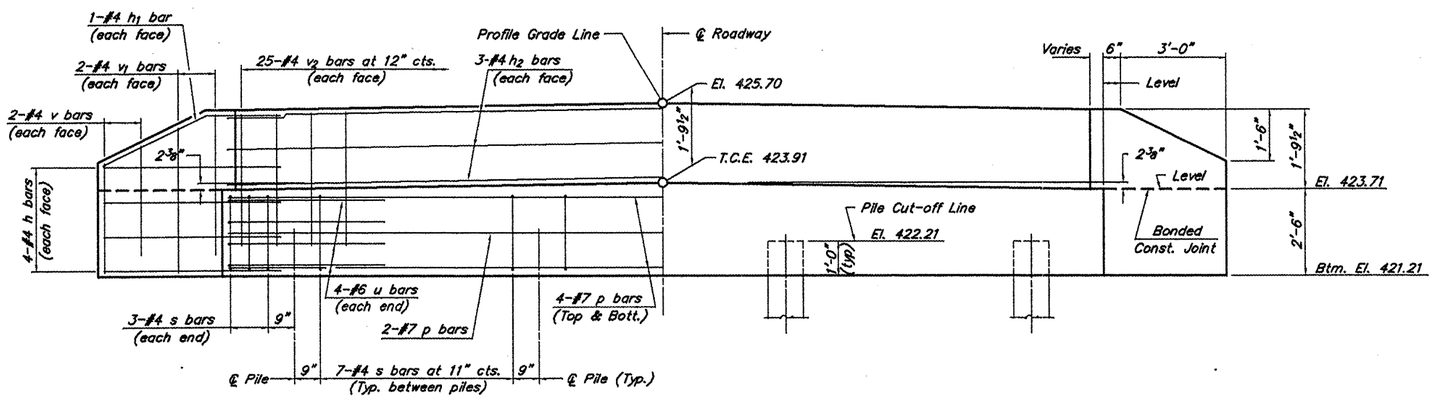

ELEVATION

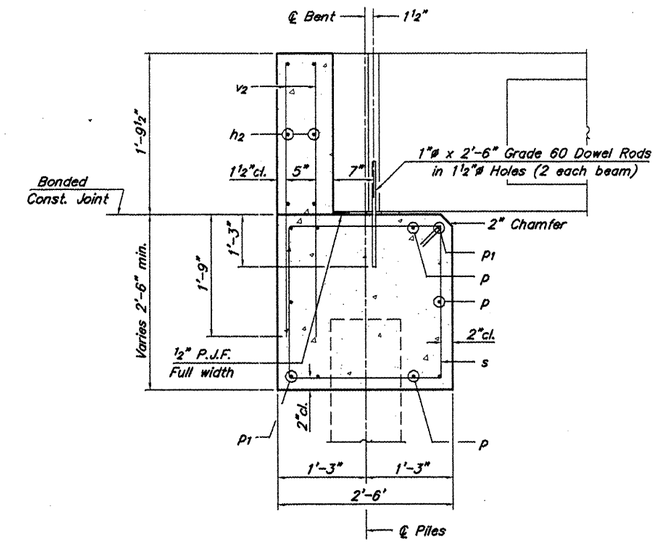

SECTION THRU ABUT.
(At Right Angles)

NOTES

1. The Backwall and the portion of the Wingwalls above the bonded construction joint shall be cast against the in-place beam.
2. Reinforcement bars shall conform to A.A.S.H.T.O. M-31, M-42 or M-53, Grade 60.

DESIGN STRESSES

f'c = 3,500 psi
fy = 60,000 psi

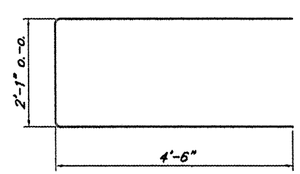

Bar u

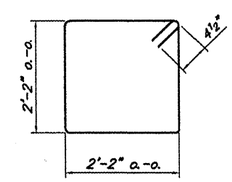

Bar s

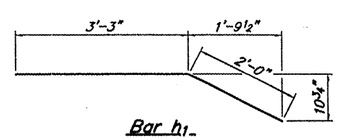

Bar h1

BILL OF MATERIAL FOR ONE ABUTMENT

Bar	No.	Size	Length	Shape
h	16	#4	5'-0"	
h1	4	#4	5'-3"	
h2	6	#4	24'-9"	
p	10	#7	24'-9"	
s	27	#4	9'-5"	
u	8	#6	11'-1"	
v	8	#4	2'-8"	
v1	8	#4	3'-8"	
v2	50	#4	3'-5"	
Concrete Structures			8.3	Cu. Yds.
Reinforcement Bars			1120	Lbs.

ABUTMENTS
LINGLE CREEK
SECTION 04-01183-00-BR
UNION COUNTY