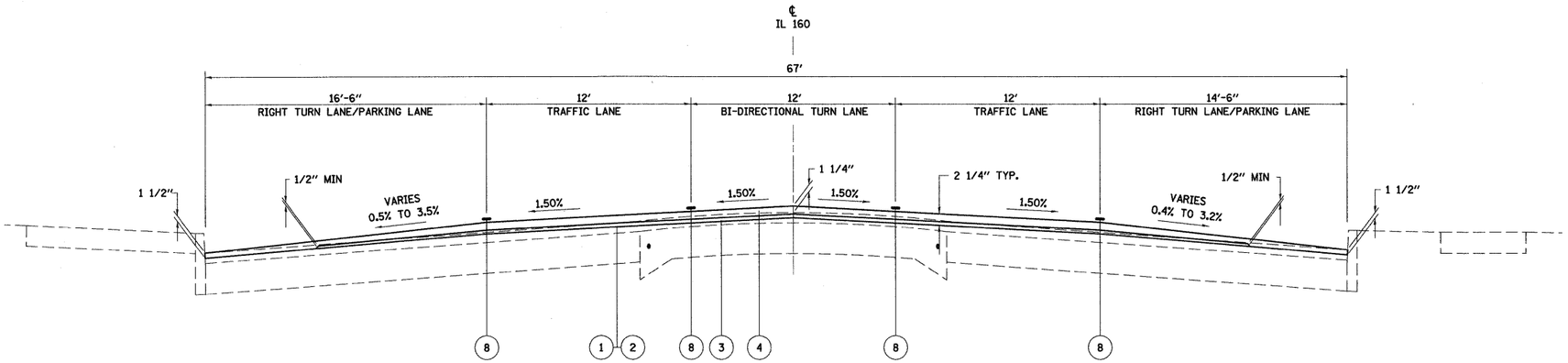

IL 160
TYPICAL SECTION
STA 867+53 TO STA 871+12

PROPOSED LEGEND

1. PROPOSED BITUMINOUS MATERIALS (PRIME COAT)
2. PROPOSED AGGREGATE PRIME COAT
3. PROPOSED LEVELING BINDER (MACHINE METHOD) N70, 3/4" AND VARIES (1/2" TO 2 1/2")
4. PROPOSED HOT-MIX ASPHALT SURFACE COURSE N70, 1 1/2" AND VARIES
5. PROPOSED HOT-MIX ASPHALT BASE COURSE, IL-19.0, N70, 11"
6. PROPOSED CURB AND GUTTER, TYPE B-6.24
7. PROPOSED SUB-BASE GRANULAR MATERIAL, TYPE A 12"
8. PROPOSED PAVEMENT MARKING, LINE 4"
9. PROPOSED STRIP REFLECTIVE CRACK CONTROL TREATMENT
10. PROPOSED LEVELING BINDER (MACHINE METHOD) N70, 1"

FILE NAME = $FILEL$	USER NAME = paul	DESIGNED - JWS	REVISED -	STATE OF ILLINOIS DEPARTMENT OF TRANSPORTATION	PROPOSED TYPICAL SECTIONS, IL ROUTE 160	F.A.P RTE.	SECTION	COUNTY	TOTAL SHEETS	SHEET NO.
		DRAWN - WJS	REVISED -			690	41X-RS-1	MADISON	58	14
	PLOT SCALE = 20.0000 ' / IN.	CHECKED - BRM	REVISED -					CONTRACT NO. 76C35		
	PLOT DATE = 1/13/2009	DATE - 9-30-08	REVISED -		SCALE: SHEET NO. 5 OF 6 SHEETS STA. TO STA.	FED. ROAD DIST. NO.	ILLINOIS	FED. AID PROJECT		