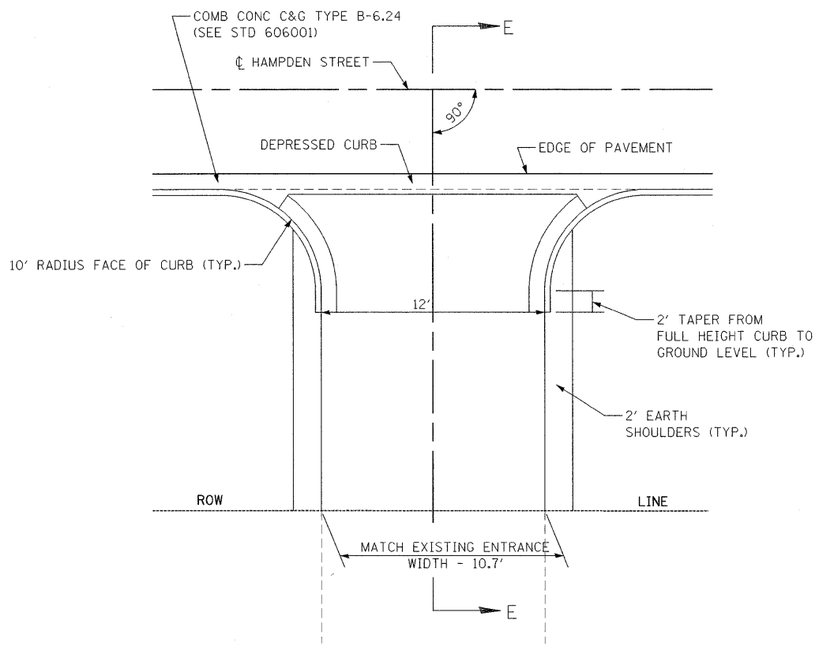

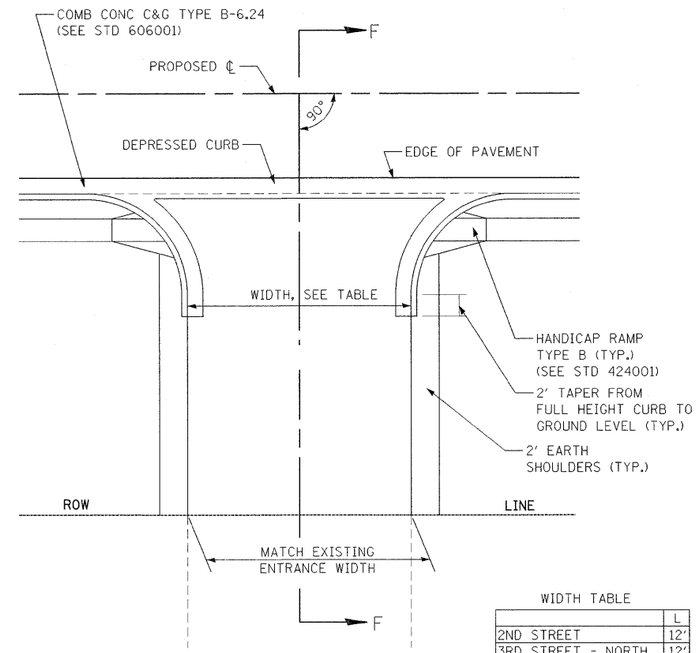

WIDTH TABLE

	L
2ND STREET	12'
3RD STREET - NORTH	12'
3RD STREET - SOUTH	10'

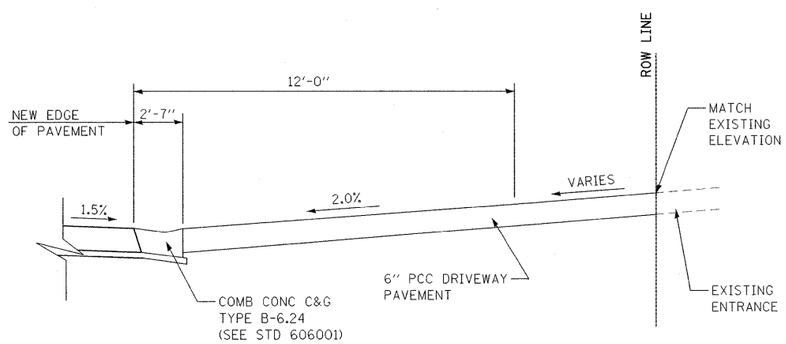

SECTION E-E

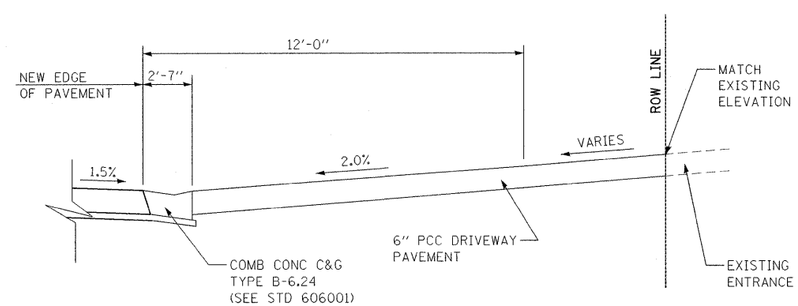

SECTION F-F

PRIVATE ENTRANCE DETAIL #1

NOT TO SCALE

PRIVATE ENTRANCE ON HAMPDEN AVENUE
STA. 6+85, LT.

PRIVATE ENTRANCE DETAIL #2

NOT TO SCALE

PRIVATE ENTRANCES ON 2ND AND 3RD STREETS

NOTE: GRADE SIDE SLOPES TO MEET
EXISTING GRADE, MAXIMUM OF 5'

FILE NAME = r3ment_detail_new.dgn	USER NAME = weaverlg	DESIGNED - M. MIEZIO	REVISED -
		DRAWN - M. MIEZIO	REVISED -
	PLOT SCALE = $SCALE$	CHECKED - A. FREY	REVISED -
	PLOT DATE = 02/02/2009	DATE - 02/06/2009	REVISED -

STATE OF ILLINOIS
DEPARTMENT OF TRANSPORTATION

ENTRANCE DETAILS
SHEET 1 OF 2

SCALE: | SHEET NO. 1 OF 7 SHEETS | STA. | TO STA.

F.A. RTE.	SECTION	COUNTY	TOTAL SHEETS	SHEET NO.
788	520-2-2	MADISON	173	131

CONTRACT NO. 76633

FED. ROAD DIST. NO. | ILLINOIS | FED. AID PROJECT