STATE OF ILLINOIS
DEPARTMENT OF TRANSPORTATION

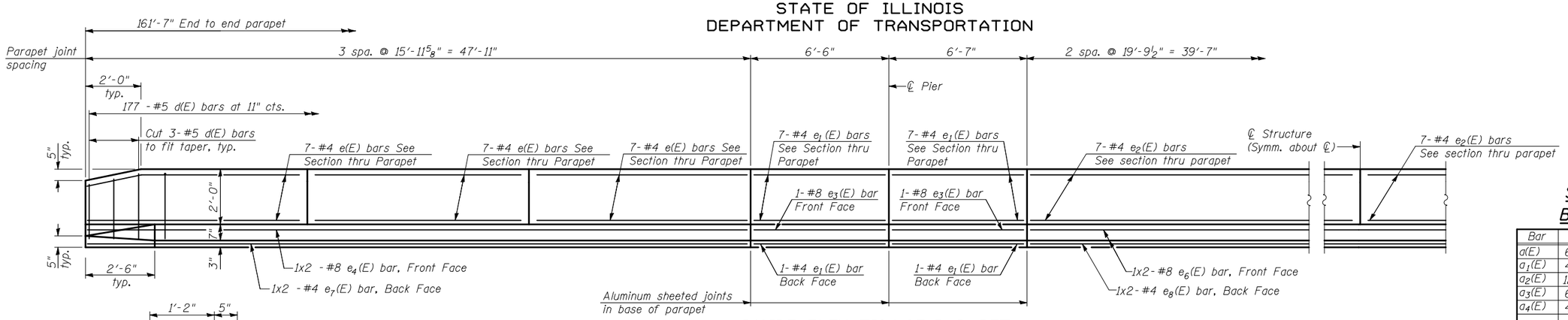


## INSIDE ELEVATION OF PARAPET

Symm. about ℄ Structure

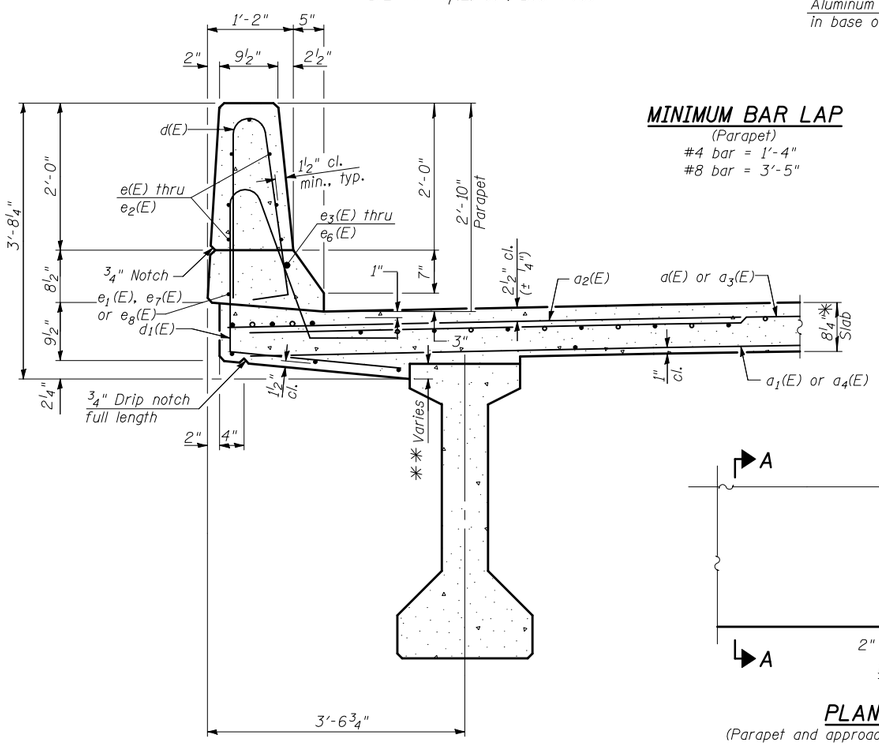


## SECTION THRU PARAPET

* Prior to grinding

** See sheet 5 of 27 for Fillet Detail.

## MINIMUM BAR LAP

(Parapet)
#4 bar = 1'-4"
#8 bar = 3'-5"

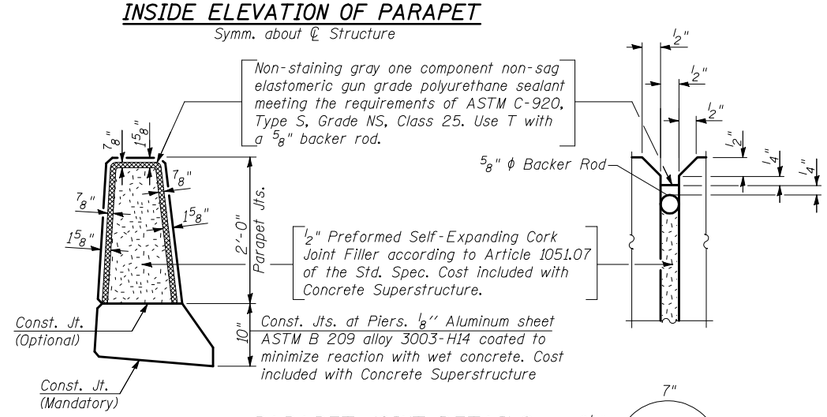


## PARAPET JOINT DETAILS

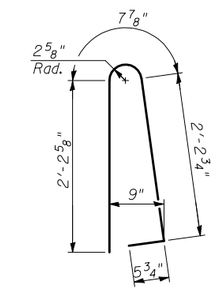


## BAR d(E)

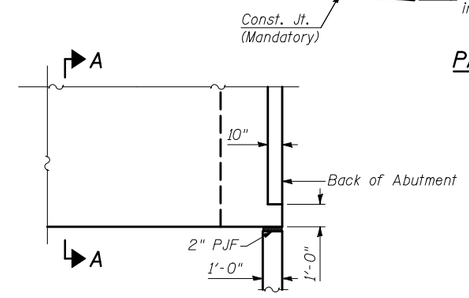


## PLAN

(Parapet and approach not included)

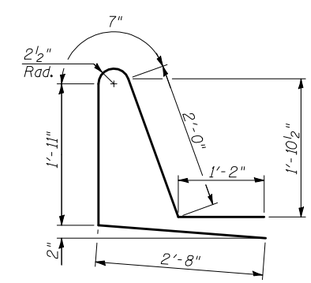


## BAR d1(E)

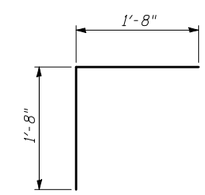


## BAR v(E)

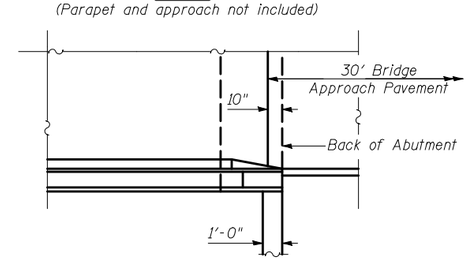


## PLAN

(Parapet and approach included)

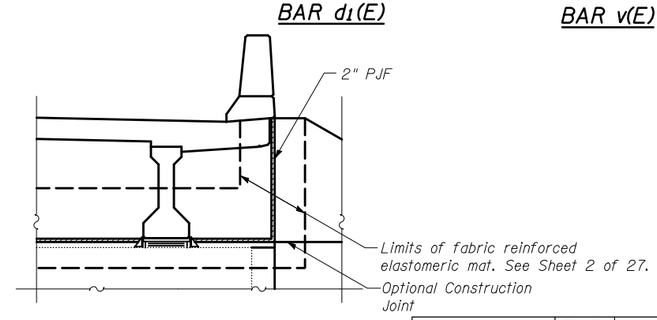


## SECTION A-A

## SUPERSTRUCTURE BILL OF MATERIAL

| Bar | No. | Size | Length | Shape |
|---|---|---|---|---|
| d(E) | 640 | #5 | 19'-1" | |
| d1(E) | 426 | #5 | 19'-1" | |
| d2(E) | 1280 | #6 | 6'-6" | |
| d3(E) | 640 | #5 | 23'-2" | |
| d4(E) | 426 | #5 | 23'-2" | |
| | | | | |
| b(E) | 504 | #5 | 28'-1" | |
| b1(E) | 176 | #7 | 28'-9" | |
| b2(E) | 504 | #5 | 24'-3" | |
| | | | | |
| d(E) | 708 | #5 | 5'-7" | |
| d1(E) | 708 | #5 | 8'-4" | |
| | | | | |
| e(E) | 168 | #4 | 15'-7" | |
| e1(E) | 128 | #4 | 6'-2" | |
| e2(E) | 56 | #4 | 19'-5" | |
| e3(E) | 16 | #8 | 6'-2" | |
| e4(E) | 16 | #8 | 27'-2" | |
| e6(E) | 8 | #8 | 23'-0" | |
| e7(E) | 16 | #4 | 27'-2" | |
| e8(E) | 8 | #4 | 23'-0" | |
| | | | | |
| m(E) | 32 | #6 | 19'-5" | |
| m1(E) | 32 | #6 | 23'-4" | |
| m2(E) | 40 | #6 | 5'-4" | |
| m3(E) | 16 | #6 | 2'-6" | |
| m4(E) | 48 | #6 | 9'-4" | |
| m5(E) | 80 | #4 | 6'-4" | |
| m6(E) | 40 | #6 | 5'-4" | |
| m7(E) | 24 | #8 | 5'-6" | |
| | | | | |
| s(E) | 164 | #5 | 8'-10" | |
| s1(E) | 164 | #4 | 9'-8" | |
| s2(E) | 70 | #4 | 10'-2" | |
| s3(E) | 70 | #4 | 10'-4" | |
| | | | | |
| u(E) | 176 | #5 | 4'-8" | |
| | | | | |
| v(E) | 172 | #5 | 3'-4" | |
| | | | | |
| Reinforcement Bars, Epoxy Coated | | | POUND | 122,040 |
| Concrete Superstructure | | | CU YD | 543 |

Bars indicated thus 1x2 - #5 etc. indicates 1 line of bars with 2 lengths per line.

## SUPERSTRUCTURE DETAILS
## I-74 OVER LITTLE KICKAPOO CREEK
## STRUCTURE NO. 057-0120
## AND 057-0121

STRAND ASSOCIATES, INC.

| | |
|---|---|
| DESIGNED | RRD |
| CHECKED | AJS |
| DRAWN | KAS |
| CHECKED | JAR |

| SHEET NO. 12 | F.A.I. RTE. | SECTION | COUNTY | TOTAL SHEETS | SHEET NO. |
|---|---|---|---|---|---|
| | 74 | (57-21B)BR | MCLEAN | 61 | 24 |
| 27 SHEETS | SUPERSTRUCTURE DETAILS (3 OF 3) | | CONTRACT NO. 70641 | | |
| | FED. ROAD DIST. NO. | ILLINOIS | FED. AID PROJECT | | |