## WITH INTERSECTION TRAFFIC SIGNALS

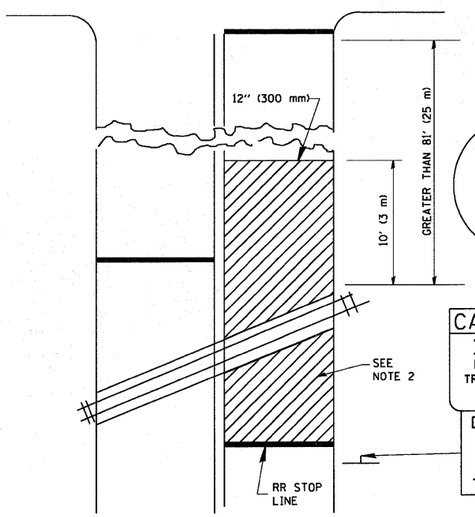


## WITH NEAR-SIDE TRAFFIC SIGNALS

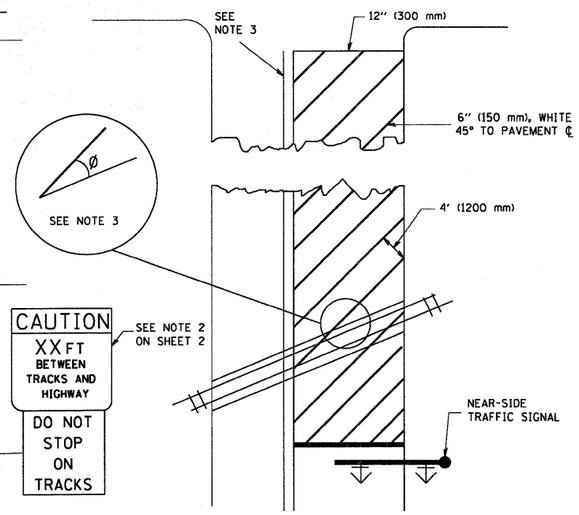


NOTES:

1. PAVEMENT MARKINGS TO BE INSTALLED ONLY ON APPROACHES TO INTERSECTIONS CONTROLLED BY TRAFFIC SIGNALS WHICH ARE INTERCONNECTED WITH THE RAILROAD WARNING SIGNALS.
2. WHERE NEAR-SIDE TRAFFIC SIGNALS ARE USED, THE PAVEMENT MARKINGS EXTENDS TO THE INTERSECTION.
3. WHERE THE ANGLE BETWEEN THE DIAGONAL STRIPES AND THE TRACK (Ø) WOULD BE LESS THAN APPROXIMATELY 20°, THE STRIPES SHOULD BE SLOPED IN THE OPPOSITE DIRECTION FROM THAT SHOWN.

## WITH NONSIGNALIZED INTERSECTION

81' (25 m) OR LESS TO CLOSEST RAIL

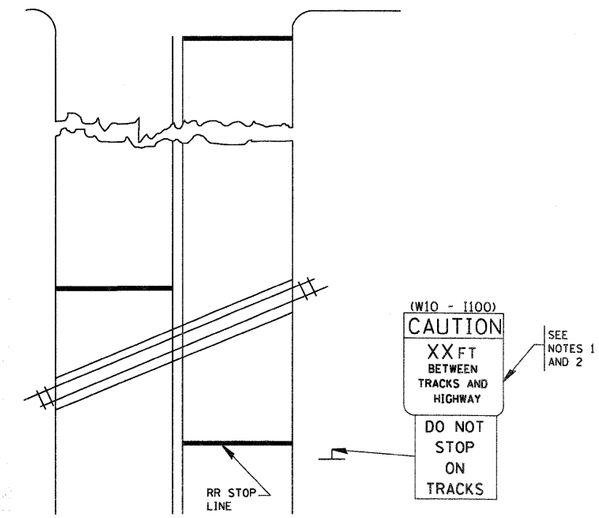


NOTE :

1. DISTANCE TO BE SHOWN ON SIGN MEASURED FROM A POINT 6 FEET (1.8 m) FROM THE RAIL CLOSEST TO THE INTERSECTION TO THE STOP LINE OR CROSSWALK, WHICHEVER IS CLOSEST, ROUNDED DOWN TO THE NEAREST 5 FEET (1.5 m). WHERE THERE IS NO STOP LINE, MEASURE TO POINT WHERE THE DRIVER HAS A VIEW OF APPROACHING TRAFFIC.
2. THE CLEARANCE SIGN IS ALSO TO BE USED AS AN INTERIM MEASURE AT LOCATIONS WITH INTERCONNECTED INTERSECTION TRAFFIC SIGNALS WHERE IT IS PLANNED TO CHANGE THEM TO NEAR-SIDE SIGNALS AT A FUTURE TIME. IN THIS CASE, THE DISTANCE TO BE SHOWN ON THE SIGN IS MEASURED FROM THE EDGE OF THE STRIPED-OUT AREA INSTEAD OF 6-FEET FROM THE RAIL. THE SIGN IS TO BE REMOVED WHEN THE NEAR-SIDE SIGNALS ARE INSTALLED AND THE PAVEMENT MARKINGS EXTEND TO THE INTERSECTION.

ALL DIMENSIONS ARE IN INCHES (MILLIMETERS) UNLESS OTHERWISE SHOWN.

| | | | | | | | | | | |
|---|---|---|---|---|---|---|---|---|---|---|
| FILE NAME = W:\distatd\22x34\tc23.dgn | USER NAME = gaglionobt | DESIGNED - | REVISED - 01-01-07 | STATE OF ILLINOIS DEPARTMENT OF TRANSPORTATION | TYPICAL SUPPLEMENTAL SIGNING AND PAVEMENT MARKING TREATMENT FOR RAILROAD CROSSINGS | F.A.U. RTE. | SECTION | COUNTY | TOTAL SHEETS | SHEET NO. |
| | | DRAWN - | REVISED - | | | 1332 | (3071,3071A & 3072) RS-3 | COOK | 38 | 33 |
| | PLOT SCALE = 50.000 ' / IN. | CHECKED - | REVISED - | | | TC-23 | | CONTRACT NO. 62755 | | |
| | PLOT DATE = 1/4/2008 | DATE - | REVISED - | | SCALE: NONE / SHEET NO. 1 OF 1 SHEETS / STA. / TO STA. | FED. ROAD DIST. NO. 1 | ILLINOIS | FED. AID PROJECT | | |