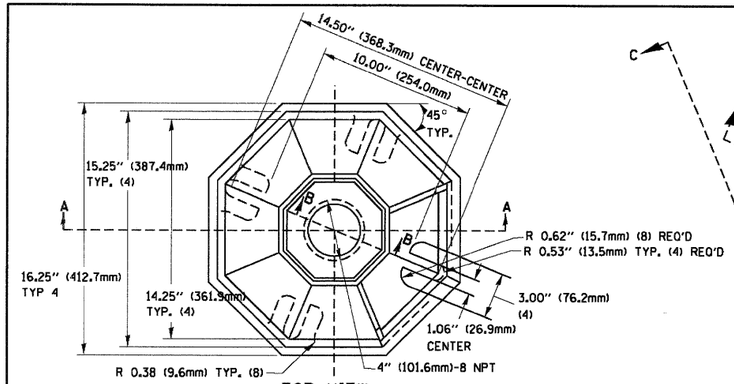


TOP VIEW

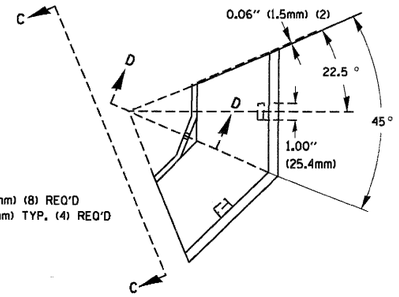


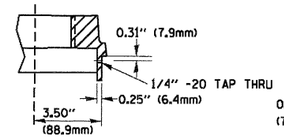


SECTION B-B

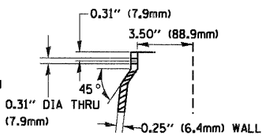


SECTION D-D

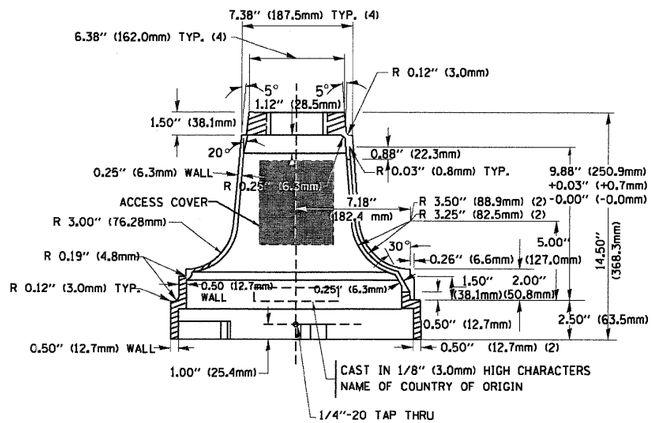


SECTION A-A

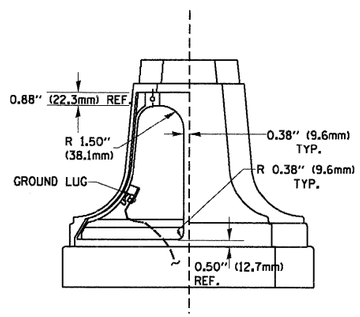


VIEW C-C

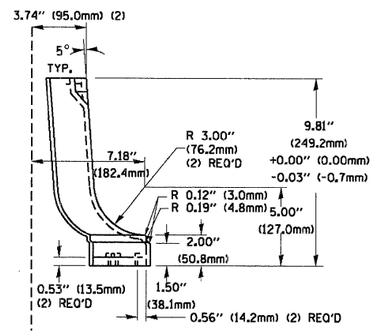


## TRAFFIC SIGNAL POST - MOUNTING BASE - TYPE A

MATERIAL:
- ASTM A48 CLASS 30 GREY IRON
- ASTM A123 HOT DIPPED GALVANIZED

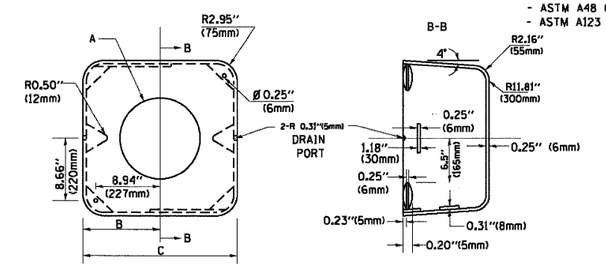


| TYPE | A | B | C | HEIGHT | WEIGHT |
|---|---|---|---|---|---|
| I | Ø 10.125" (257mm) | 9.5" (241mm) | 19" (483mm) | 12" (300mm) | 24kg |
| II | Ø 11.125" (283mm) | 10.75" (273mm) | 21.5" (546mm) | 12" (300mm) | 26kg |

## SHROUD DETAIL

NOTE:
SUPPORT EXISTING CABINET AND CONTROL EQUIPMENT ABOVE FOUNDATION TO KEEP TRAFFIC SIGNAL FUNCTIONING WHILE FOUNDATION MODIFICATION WORK IS PROCEEDING.

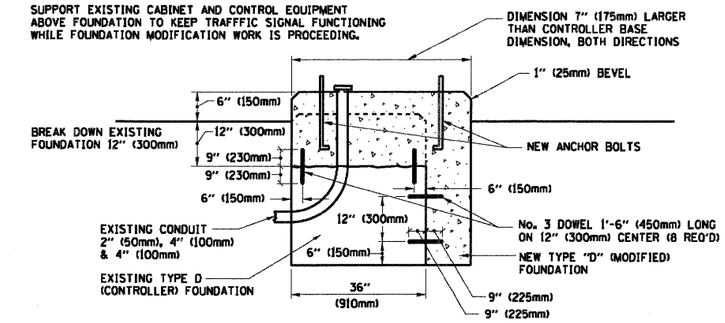


## MODIFY EXISTING TYPE "D" FOUNDATION

(NOT TO SCALE)

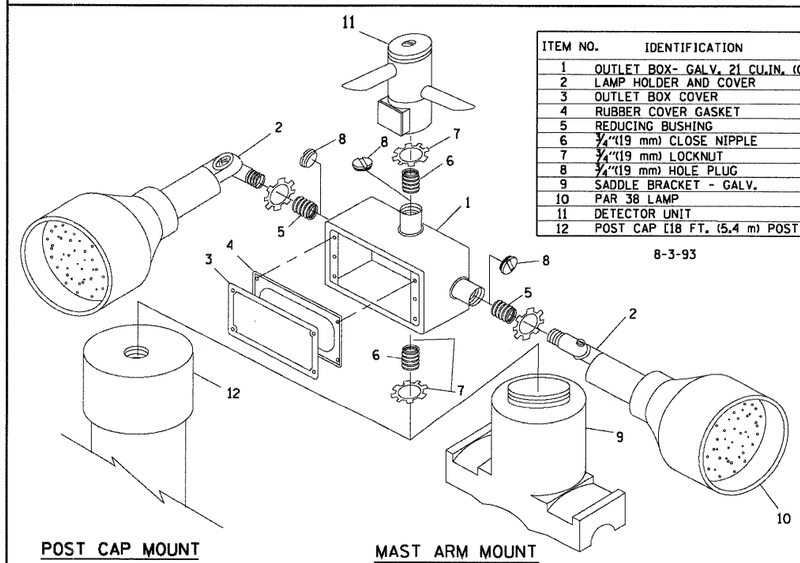


| ITEM NO. | IDENTIFICATION |
|---|---|
| 1 | OUTLET BOX- GALV. 21 CU.IN. (0.000344 CU-M) |
| 2 | LAMP HOLDER AND COVER |
| 3 | OUTLET BOX COVER |
| 4 | RUBBER COVER GASKET |
| 5 | REDUCING BUSHING |
| 6 | 3/4"(19 mm) CLOSE NIPPLE |
| 7 | 3/4"(19 mm) LOCKNUT |
| 8 | 3/4"(19 mm) HOLE PLUG |
| 9 | SADDLE BRACKET - GALV. |
| 10 | PAR 38 LAMP |
| 11 | DETECTOR UNIT |
| 12 | POST CAP [18 FT. (5.4 m) POST MIN.] |

8-3-93

POST CAP MOUNT

MAST ARM MOUNT

## EMERGENCY VEHICLE DETECTOR WITH CONFIRMATION BEACON MOUNTING DETAIL

NOTES:

1. ALL ELECTRICAL ITEMS, EXCEPT ITEMS #2 AND #11 SHALL BE ALUMINUM OR GALVANIZED
2. ITEM #1- OZ/GEDNEY FSX-1-50 OR EQUIVALENT
   ITEM #2- MULBERRY CON-O-SHADE LAMP SHIELD OR EQUIVALENT
   ITEM #9- "BAND-IT" SADDLE BRACKET OR EQUIVALENT
3. WHEN POST MOUNTING IS SPECIFIED, ITEM #9 SHALL NOT BE REQUIRED. THE DETECTION UNIT SHALL BE MOUNTED DIRECTLY ON TOP OF THE CAP BY DRILLING AND TAPPING A 3/4"(19 mm) HOLE WITH PIPE THREADS. THE POST CAP SHALL EITHER BE SCREWED TO THE TOP OF THE POST OR A MINIMUM OF 3 TIGHTENING SCREWS SHALL BE REQUIRED ON EACH CAP.

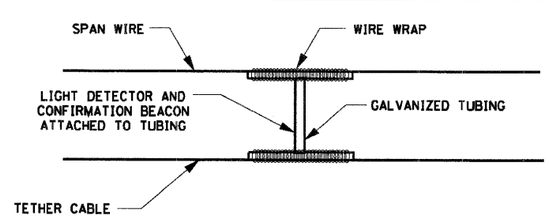


## LIGHT DETECTOR AND CONFIRMATION BEACON MOUNTING FOR TEMPORARY TRAFFIC SIGNALS

(NOT TO SCALE)

NOTES:
1. REMOVAL OF EXISTING CONDUIT FROM THE HANDHOLE AND THE INSTALLATION OF THE CONDUIT BUSHING SHALL BE INCIDENTAL TO THE HANDHOLE.

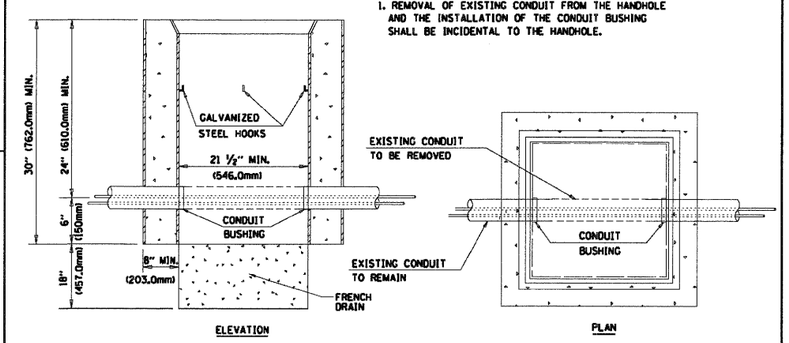


ELEVATION

PLAN

## DETAIL
## HANDHOLE TO INTERCEPT EXISTING CONDUIT

N.T.S.

| | | | |
|---|---|---|---|
| FILE NAME = W:\diststd\22x34\ts05.dgn | USER NAME = gaglianobt | DESIGNED - D.A.D. | REVISED - BUR.TRAFFIC 03-15-01 |
| | | DRAWN - R.W.P. | REVISED - BUR.TRAFFIC 11-12-01 |
| | PLOT SCALE = 50.0000 ' / IN. | CHECKED - D.A.Z. | REVISED - BUR.TRAFFIC 01-01-02 |
| | PLOT DATE = 1/4/2000 | DATE - 05-30-00 | REVISED - |

**STATE OF ILLINOIS**
**DEPARTMENT OF TRANSPORTATION**

**DISTRICT ONE**
**STANDARD TRAFFIC SIGNAL DESIGN DETAILS**

SCALE: NONE | SHEET NO. 4 OF 4 SHEETS | STA. | TO STA.

| F.A.P. RTE. | SECTION | COUNTY | TOTAL SHEETS | SHEET NO. |
|---|---|---|---|---|
| VAR | 2009-008-TS | COOK | 41 | 39 |
| | TS-05 | CONTRACT NO. 60G04 | | |

FED. ROAD DIST. NO. 1 | ILLINOIS | FED. AID PROJECT