TEMPORARY CONTROLLER SEQUENCE

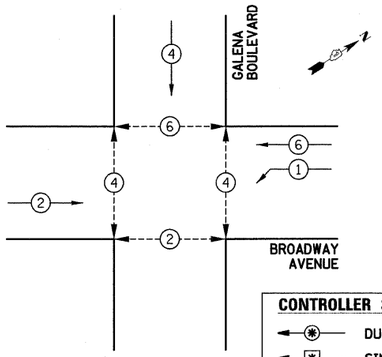

CONTROLLER SEQUENCE LEGEND

- DUAL ENTRY PHASE
- SINGLE ENTRY PHASE
- OVERLAP
- * NUMBER REFERRING TO ASSOCIATED PHASE
- PEDESTRIAN PHASE

TEMPORARY PHASE DESIGNATION DIAGRAM

PUSHBUTTONS "A" SHALL PLACE A CALL IN PHASES 2 AND 4

PUSHBUTTONS "B" SHALL PLACE A CALL IN PHASES 4 AND 6

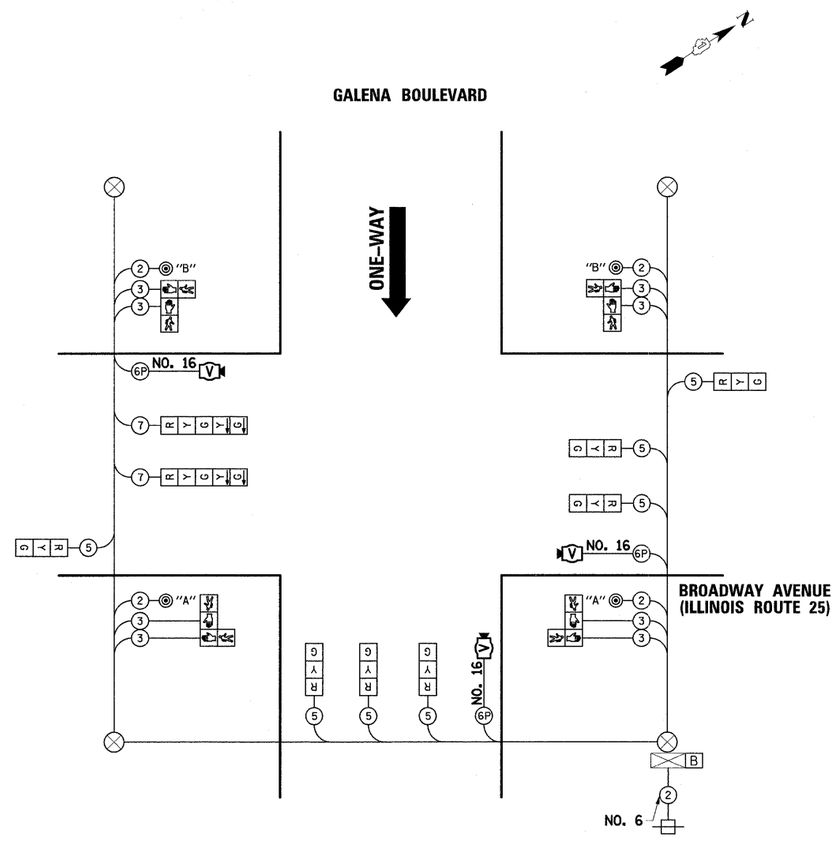

TEMPORARY CABLE DIAGRAM LEGEND

- R — TEMPORARY TRAFFIC SIGNAL SECTION OR PEDESTRIAN SIGNAL SECTION 12" (300mm)
- TEMPORARY CONTROLLER CABINET
- TEMPORARY SERVICE INSTALLATION
- (5) — INDICATES NUMBER OF CONDUCTORS IN CABLE. ALL CONDUCTORS TO BE NO. 14 AWG WIRE UNLESS OTHERWISE NOTED.
- EMERGENCY VEHICLE LIGHT DETECTOR
- CONFIRMATION BEACON
- VEHICLE DETECTOR, INDUCTION LOOP
- PEDESTRIAN PUSHBUTTON DETECTOR
- 12" (300mm) PEDESTRIAN SIGNAL SECTION
- V — VIDEO DETECTION CAMERA
- B — UNINTERRUPTABLE POWER SUPPLY

I.D.O.T TRAFFIC SIGNAL INSTALLATION ELECTRICAL SERVICE REQUIREMENTS					TOTAL WATTAGE
TYPE	NO. LAMPS	WATTAGE		% OPERATION	
		INCAND.	LED		
SIGNAL (RED)	9		17	0.50	76.5
(YELLOW)	9		25	0.25	56.3
(GREEN)	9		15	0.25	33.8
ARROW	4		12	0.10	4.8
PED. SIGNAL	8		25	1.00	200
CONTROLLER	1		100	1.00	100
VIDEO SYSTEM	1		15	1.00	15
UPS	1		25	1.00	25
				TOTAL =	511.4

ENERGY COSTS TO: CITY OF AURORA
44 E. DOWNER PLACE
AURORA, ILLINOIS 60507-2067

ENERGY SUPPLY CONTACT: MARK SCHERIBEL
PHONE: (630) 723-2128
COMPANY: COMMONWEALTH EDISON

CONTROLLER CABINET TYPE AND DIMENSIONS VARY. THE CONTRACTOR SHALL BE RESPONSIBLE FOR CORRECT CABINET DIMENSIONS PRIOR TO THE CONSTRUCTION OF THE CABINET MOUNTING PLATFORM SHOWN BELOW.

CABINET PLATFORM LEGS AND RAILS SHALL BE CONSTRUCTED OF 2" X 6" TREATED WOOD TO RESIST WEATHERING.

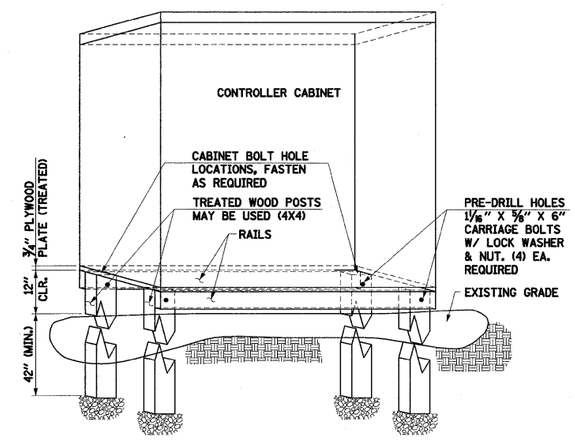

TEMPORARY SIGNAL CONTROLLER WOOD SUPPORT PLATFORM DETAIL

(NOT TO SCALE)

FILE NAME = ...\690_3_tsig04c_galena_IDOT.dgn	USER NAME = _USER_	DESIGNED -	REVISED -
		DRAWN BAH	REVISED -
	PLOT SCALE = $SCALE$	CHECKED APS	REVISED -
	PLOT DATE = 2/11/2009	DATE JAN 23 2009	REVISED -

STATE OF ILLINOIS
DEPARTMENT OF TRANSPORTATION

TEMPORARY TRAFFIC SIGNAL
CABLE PLAN AND PHASE DESIGNATION DIAGRAM
IL ROUTE 25 AT GALENA BOULEVARD

SCALE: | SHEET NO. OF SHEETS | STA. TO STA.

F.A.U. RTE.	SECTION	COUNTY	TOTAL SHEETS	SHEET NO.
2503	2009-002 TS	KANE	34	17
		CONTRACT NO. 60F99		

FED. ROAD DIST. NO. | ILLINOIS | FED. AID PROJECT

PLAN — NOTE BOOK NO. — SURVEYED — PLOTTED — ALIGNMENT CHECKED — R.O.W. MAP CHECKED — PLAN FILE NAME — BY — DATE

PROFILE — NOTE BOOK NO. — SURVEYED — PLOTTED — GRADES CHECKED — B.M. NOTED — STRUCTURE NOTATNS CHKKD — BY — DATE