NOTES

Bar splicer assemblies shall be of an approved type and shall develop in tension at least 125 percent of the yield strength of the lapped reinforcement bars.

Splicer rods shall be of minimum 60 ksi yield strength, threaded or coiled full length.

All reinforcement bars shall be lapped and tied to the splicer rods or dowel bars.

Bar splicer assemblies shall be epoxy coated according to the requirements for reinforcement bars.

Other systems of similar design may be submitted to the Engineer for approval. Approval shall be based on certified test results from an approved testing laboratory that the proposed bar splicer assembly satisfies the following requirements:

1. Minimum Capacity (Tension in kips) = $1.25 \times f_y \times A_t$
2. Minimum *Pull-out Strength (Tension in kips) = $0.66 \times f_y \times A_t$

Where f_y = Yield strength of lapped reinforcement bars in ksi.
A_t = Tensile stress area of lapped reinforcement bars.
* = 28 day concrete

BAR SPLICER ASSEMBLIES			
Bar Size to be Spliced	Splicer Rod or Dowel Bar Length	Strength Requirements	
		Min. Capacity kips - tension	Min. Pull-Out Strength kips - tension
#4	1'-8"	14.7	7.9
#5	2'-2"	23.0	12.3
#6	2'-7"	33.1	17.4
#7	3'-5"	45.1	23.8
#8	4'-6"	58.9	31.3
#9	5'-9"	75.0	39.6
#10	7'-3"	95.0	50.3
#11	9'-0"	117.4	61.8

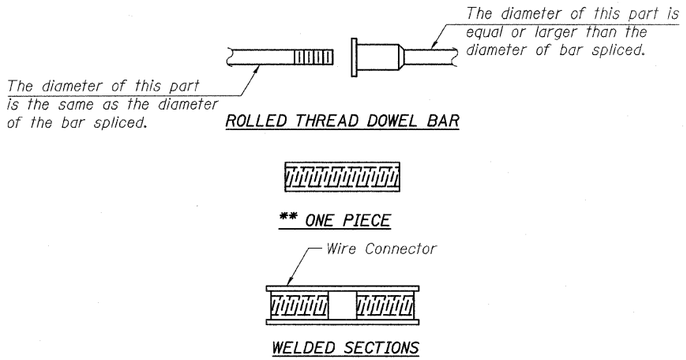

BAR SPLICER ASSEMBLY ALTERNATIVES

**Heavy Hex Nuts conforming to ASTM A 563, Grade C, D or DH may be used.

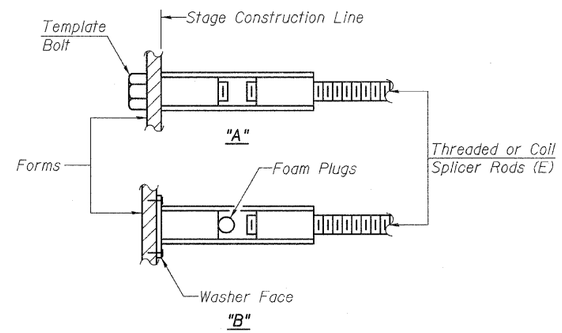

INSTALLATION AND SETTING METHODS

"A" : Set bar splicer assembly by means of a template bolt.
"B" : Set bar splicer assembly by nailing to wood forms or cementing to steel forms.
(E) : Indicates epoxy coating.

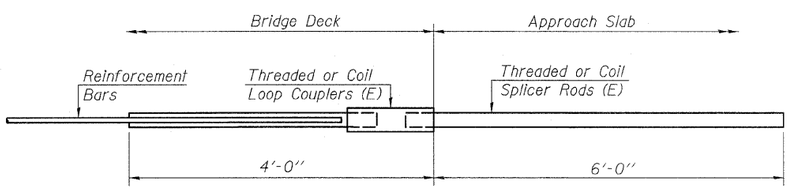

FOR INTEGRAL OR SEMI-INTEGRAL ABUTMENTS

Bar Splicer for #5 bar
Min. Capacity = 23.0 kips - tension
Min. Pull-out Strength = 12.3 kips - tension
No. Required = -

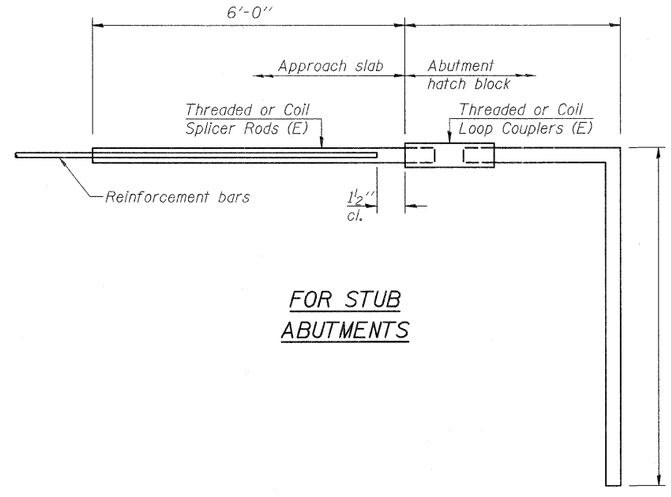

FOR STUB ABUTMENTS

Bar Splicer for #5 bar
Min. Capacity = 23.0 kips - tension
Min. Pull-out Strength = 12.3 kips - tension
No. Required = -

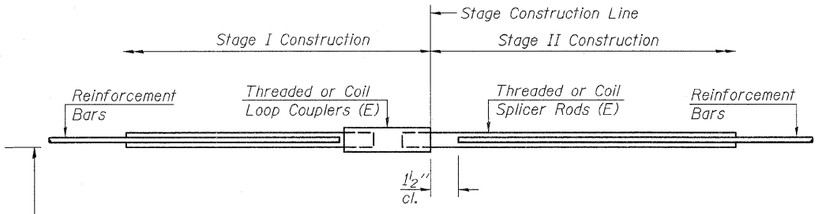

STANDARD

Bar Size	No. Assemblies Required	Location
#6	8	East Abutment
#7	8	
#6	2	West Abutment
#7	4	

BAR SPLICER ASSEMBLY DETAILS
STRUCTURE NO. 045-2005

CHRISTIAN-ROGE & ASSOCIATES, INC.
ENGINEERS / PLANNERS / SURVEYORS
211 W. WACKER DRIVE CHICAGO, IL. 60606
PHONE: (312)372-2023 FAX: (312)372-5274

BSD-1 10-1-08

FILE NAME = bar_splicer.dgn	USER NAME = IDOT	DESIGNED - B.N.S.	REVISED -	STATE OF ILLINOIS DEPARTMENT OF TRANSPORTATION	BAR SPLICER ASSEMBLY DETAILS U.S. 30 OVER WEST BRANCH BIG ROCK CREEK S.N. 045-2005	F.A.P. RTE.	SECTION	COUNTY	TOTAL SHEETS	SHEET NO.
		DRAWN - F.M.	REVISED -			573	117 R-2B-R	KANE	40	25
	PLOT SCALE = 50.0000 ' / IN.	CHECKED - B.N.S./J.C.N.	REVISED -					CONTRACT NO. 60E63		
	PLOT DATE = 1/26/2009	DATE - JANUARY 27, 2009	REVISED -		SCALE: SHEET NO. 58 OF 518 SHEETS STA. TO STA.	FED. ROAD DIST. NO. 1	ILLINOIS	FED. AID PROJECT		