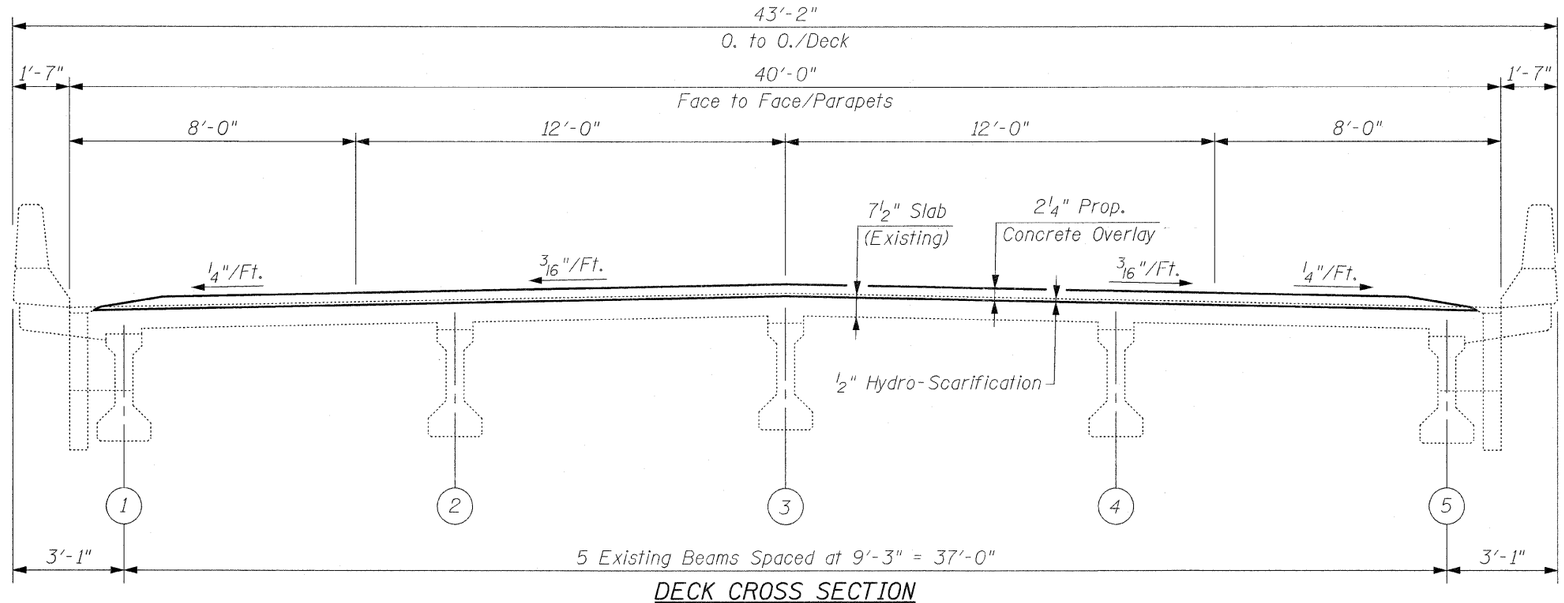

DECK CROSS SECTION

(Looking East)

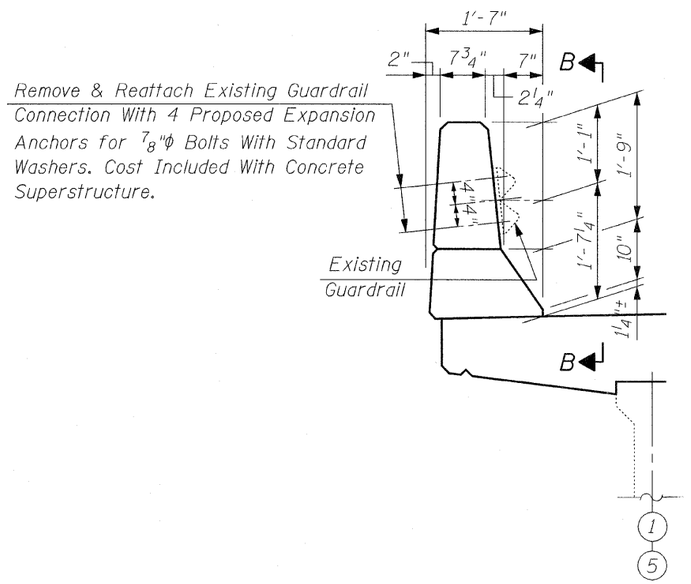

SECTION A-A

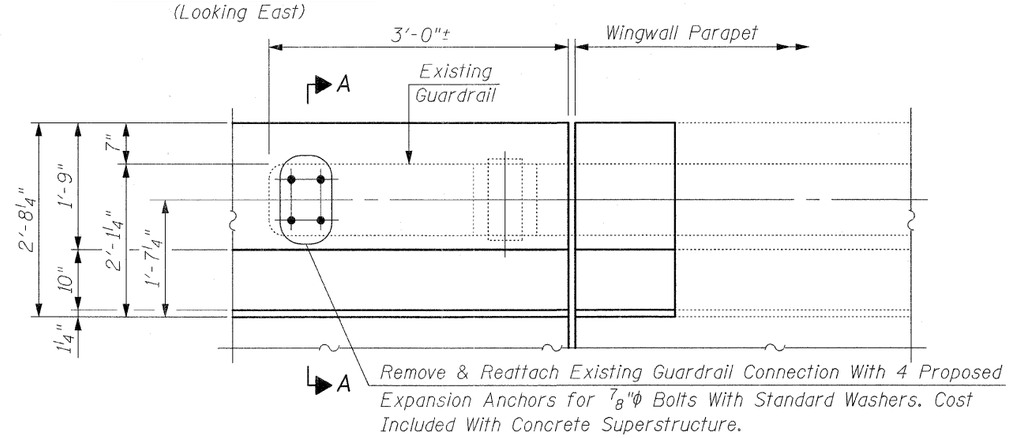

VIEW B-B

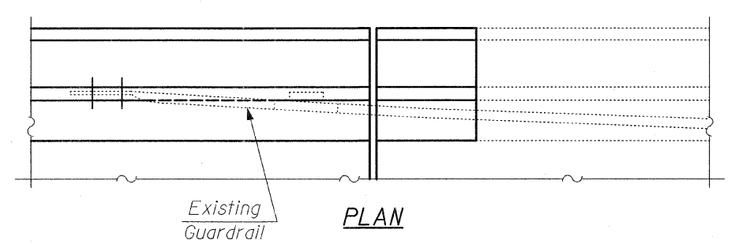

PLAN

DETAIL "A"

(Showing Guardrail Connection to Parapet)

CHRISTIAN-ROGE & ASSOCIATES, INC.
ENGINEERS / PLANNERS / SURVEYORS
211 W. WACKER DRIVE CHICAGO, IL. 60606
PHONE: (312)372-2023 FAX: (312)372-5274

FILE NAME = deck_cross_section.dgn	USER NAME = IDOT	DESIGNED - B.N.S.	REVISED -
		DRAWN - F.M.	REVISED -
	PLOT SCALE = 50.0000 ' / IN.	CHECKED - B.N.S./J.C.N.	REVISED -
	PLOT DATE = 1/26/2009	DATE - JANUARY 27, 2009	REVISED -

STATE OF ILLINOIS
DEPARTMENT OF TRANSPORTATION

EXISTING DECK CROSS SECTION & GUARDRAIL CONNECTION TO PARAPET
U.S. 30 OVER WEST BRANCH BIG ROCK CREEK S.N. 045-2005

SCALE: | SHEET NO. S3 OF S18 SHEETS | STA. TO STA.

F.A.P. RTE.	SECTION	COUNTY	TOTAL SHEETS	SHEET NO.
573	117 R-2B-R	KANE	40	20
		CONTRACT NO. 60E63		

FED. ROAD DIST. NO. 1 | ILLINOIS | FED. AID PROJECT