STATE OF ILLINOIS
DEPARTMENT OF TRANSPORTATION

ROUTE NO.	SECTION	COUNTY	TOTAL SHEETS	SHEET NO.
F.A.I. 24	*	JOHNSON	150	149
FED. ROAD DIST. NO. 7	ILLINOIS	FED. AID PROJECT-		

*BSMART FY 04-3
98836

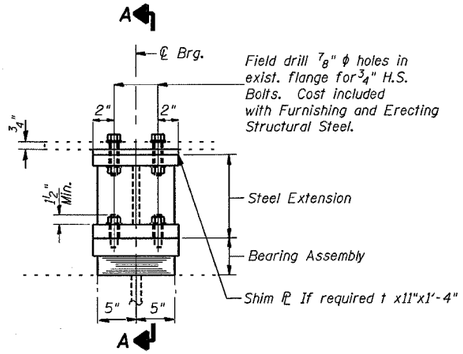

ELEVATION AT PIER 1

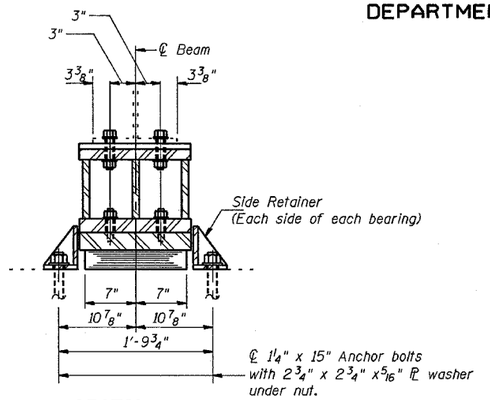

SECTION A-A

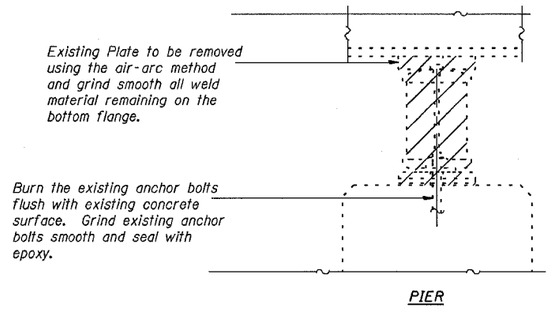

EXISTING BEARING REMOVAL DETAILS

Cost is included with Jack and Remove Existing Bearings

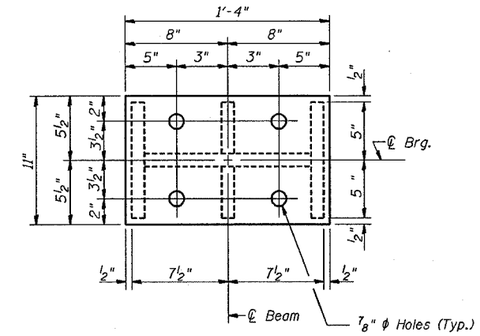

PLAN-TOP & BOTTOM PLATE

TYPE I ELASTOMERIC EXP. BRG.

Notes: See sheet 150 for Anchor Bolt installation.

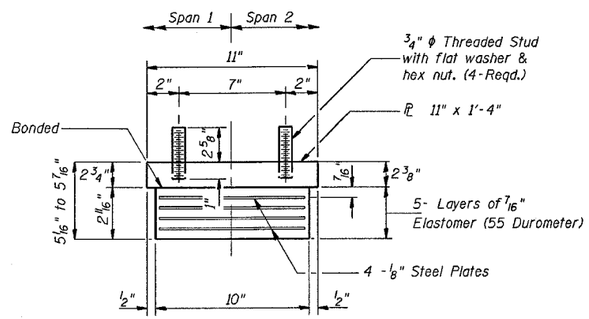

BEARING ASSEMBLY

Note: Shim plates shall not be placed under Bearing Assembly.

GIRDER REACTIONS

		SN 044-0049	SN 044-0050
Rℓ	(K)	54.9	57.3
R℄	(K)	44.8	45.4
Imp.	(K)	13.4	13.6
R (Total)	(K)	113.1	116.3

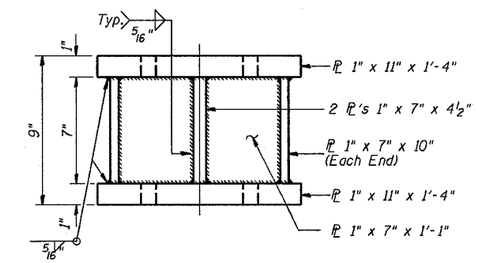

STEEL EXTENSION AT PIER 1

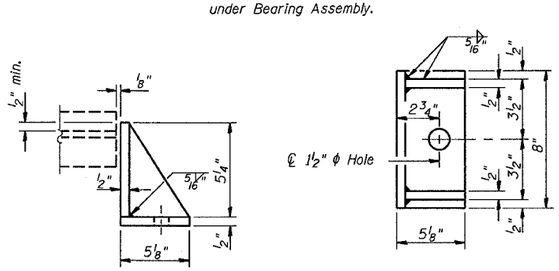

SIDE RETAINER

Equivalent rolled angle with stiffeners will be allowed in lieu of welded plates. Weight included with Furnishing and Erecting Structural Steel.

Notes: Prior to ordering any material, the Contractor shall verify in the field all bearing height and shim thickness dimensions.

The minimum jack capacity required is 65 Tons.

New steel extensions, side retainers, connection bolts, anchor bolts, and shim plates are included in "Furnishing and Erecting Structural Steel".

Hatched areas indicate Jack and Remove Existing Bearings.

Existing diaphragm removal may be required to provide clearance for the drill during drilling holes in the bottom flange for new bearing attachment. Cost shall be included in the cost of "Furnishing and Erecting Structural Steel".

BILL OF MATERIAL

Item	Unit	Total
Elastomeric Bearing Assembly Type I	Each	12
Jack and Remove Existing Bearings	Each	12

DESIGNED:	MAS
CHECKED:	MAS
DRAWN:	JMB
CHECKED:	MAS

PIER 1
TYPE I ELASTOMERIC BEARING
JOHNSON COUNTY
S.N. 044-0049 (E.B.)
S.N. 044-0050 (W.B.)