CONTRACT NO. 64647

ROUTE NO.	SECTION	COUNTY	TOTAL SHEETS	SHEET NO.
F.A.P. 595	1-3-K	Rock Island	476	282
FED. ROAD DIST. NO. 7	ILLINOIS	FED. AID PROJECT-		

SHEET NO. 2
5 SHEETS

STATE OF ILLINOIS
DEPARTMENT OF TRANSPORTATION

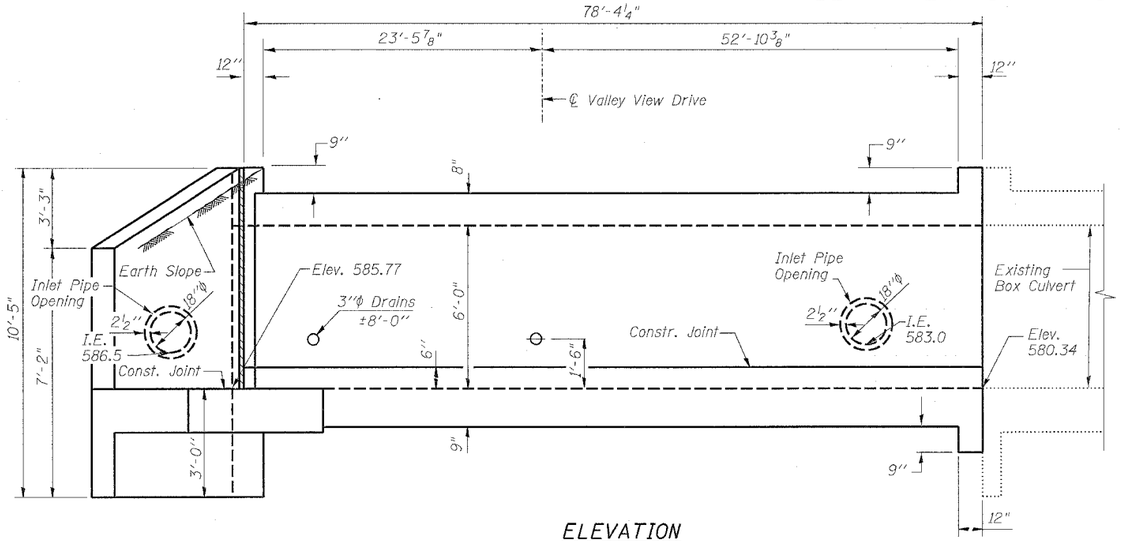

ELEVATION

Dimensions at Rt. L's to Tangent to Valley View Drive at ℄ Culvert

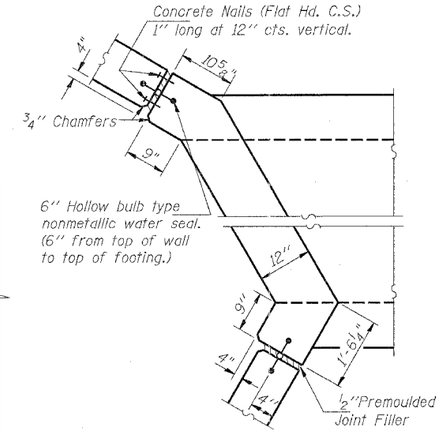

CORNER DETAIL

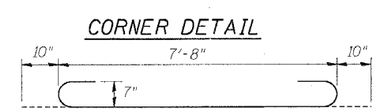

BAR a_{31}

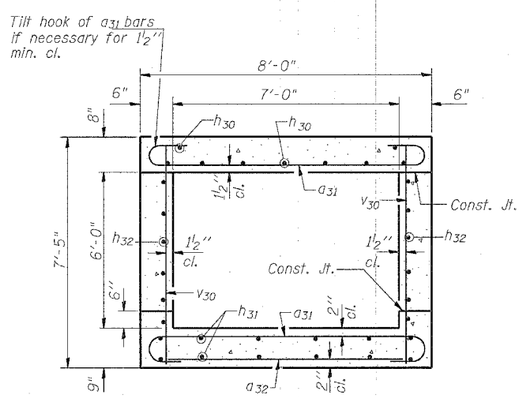

SECTION THRU BARREL

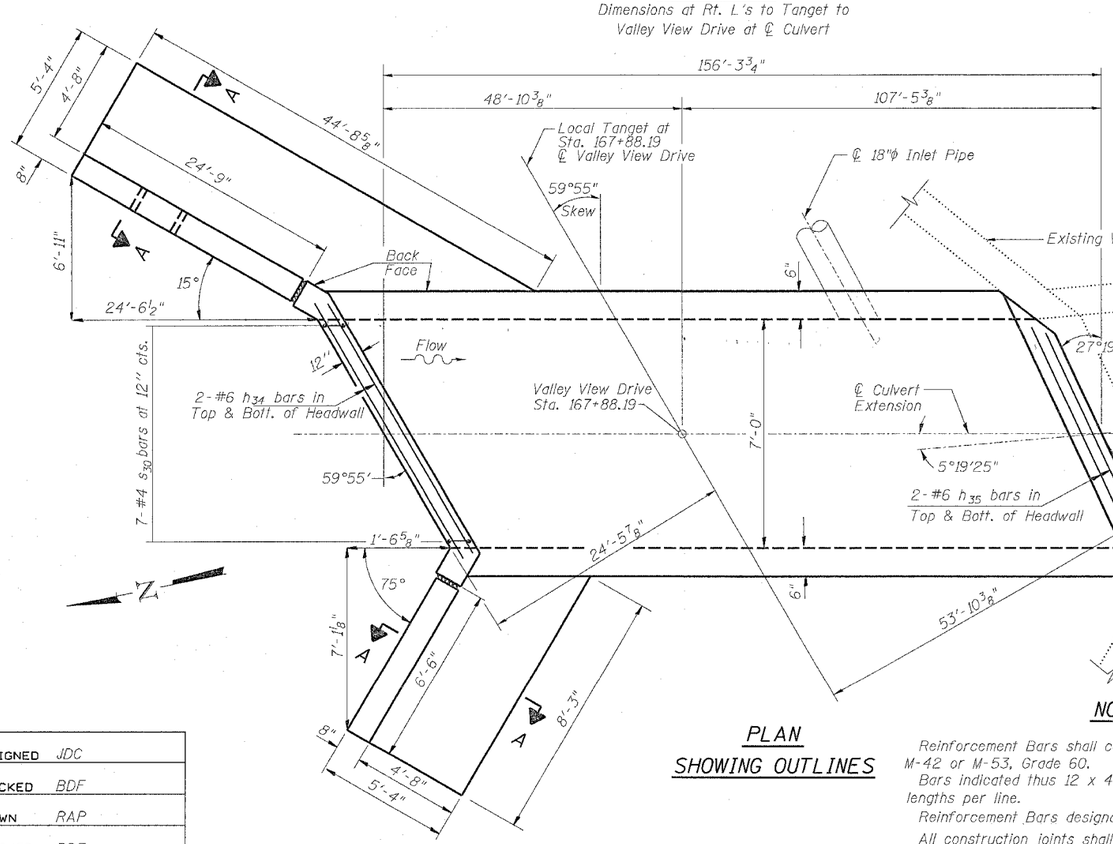

PLAN SHOWING OUTLINES

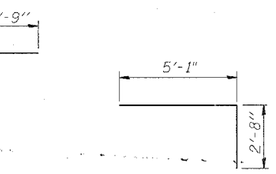

BAR d_{30}

BAR z_{30}

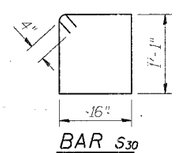

BAR s_{30}

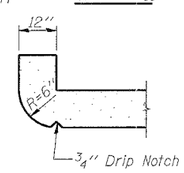

SECTION THRU HEADWALL

(Up Stream End Only)

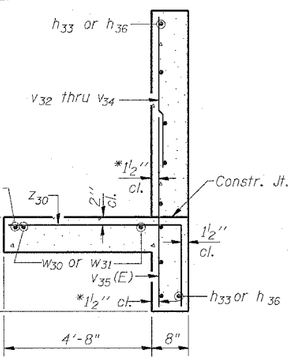

SECTION A-A

*v bars shall not be placed more than 1½" cl. from back face of wingwall.

DESIGN STRESSES

fy = 60,000 psi
f'c = 3,500 psi

Max. Soil Pressure under footing = 2800 psf

LOADING HS 20-44 & ALT.

BILL OF MATERIAL

Bar	No.	Size	Length	Shape
a_{31}	590	#7	9'-4"	
a_{32}	81	#4	7'-3"	
d_{30}	7	#4	4'-6"	
h_{30}	45	#6	33'-10"	
h_{31}	60	#5	33'-6"	
h_{32}	60	#5	33'-6"	
h_{33}	11	#4	24'-4"	
h_{34}	6	#6	15'-3"	
h_{35}	8	#6	8'-8"	
h_{36}	11	#4	6'-1"	
s_{30}	7	#4	5'-6"	
v_{30}	419	#4	7'-0"	
v_{31}	4	#4	10'-0"	
v_{32}	15	#4	3'-11"	
v_{33}	14	#4	5'-6"	
v_{34}	11	#4	6'-3"	
v_{35}(E)	40	#4	6'-0"	
v_{36}	16	#4	4'-0"	
w_{30}	7	#5	30'-9"	
w_{31}	7	#5	9'-9"	
z_{30}	51	#6	7'-9"	
Concrete Box Culverts			Cu. Yd.	115.5
Reinforcement Bars, Epoxy Coated			Pound	160
Reinforcement Bars			Pound	21,690
Expansion Bolts ¾"φ			Each	16

NOTES

Reinforcement Bars shall conform to the requirements of AASHTO M-31, M-42 or M-53, Grade 60.

Bars indicated thus 12 x 4-#5 etc. indicates 12 lines of bars with 4 lengths per line.

Reinforcement Bars designated (E) shall be epoxy coated

All construction joints shall be bonded.

Precast Culvert alternate is not allowed.

DESIGNED	JDC
CHECKED	BDF
DRAWN	RAP
CHECKED	BDF

UPSTREAM EXTENSION DETAILS
FA ROUTE 595 SECTION 1-3-K
ROCK ISLAND COUNTY
STATION 410+21.25 (JOHN DEERE ROAD)
STATION 167+88.19 (VALLEY VIEW DRIVE)