CONTRACT NO. 64647

F.A.P. RTE.	SECTION	COUNTY	TOTAL SHEETS	SHEET NO.
595	1-3-K	ROCK ISLAND	476	240C
STA.	TO STA.			
FED. ROAD DIST. NO.	ILLINOIS	FED. AID PROJECT		

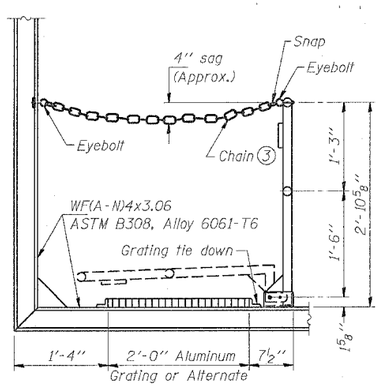

SIDE ELEVATION

(Showing safety chain w/o sign)

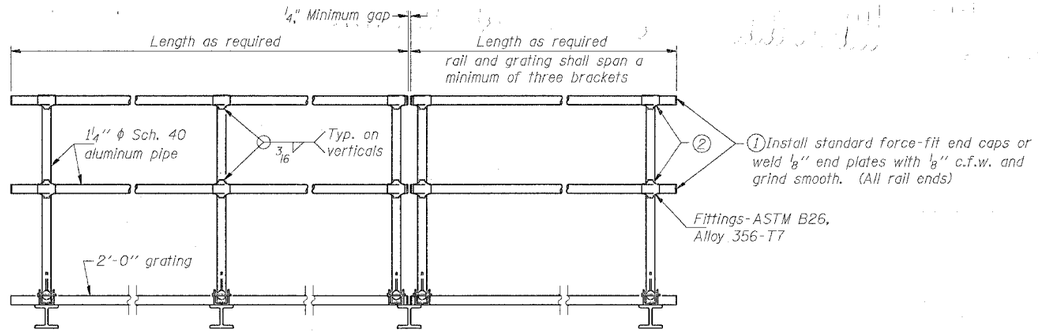

FRONT ELEVATION

(2) Horizontal handrail member shall be continuous thru fitting. Provide 7/16" ϕ hole in fitting for 3/8" ϕ bolt. Field drill 7/16" ϕ hole in horizontal rail member. Provide locknut and two stainless steel washers for bolt. (Use 5/16" eyebolts in 7/16"ϕ holes on top rail at ends only.)

HANDRAIL DETAILS

Handrail pipe shall be ASTM B241, Alloy 6063-T6 or Alloy 6061-T6.

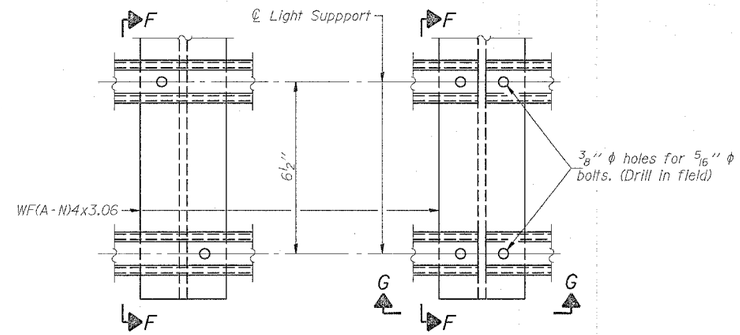

DETAIL F

DETAIL G

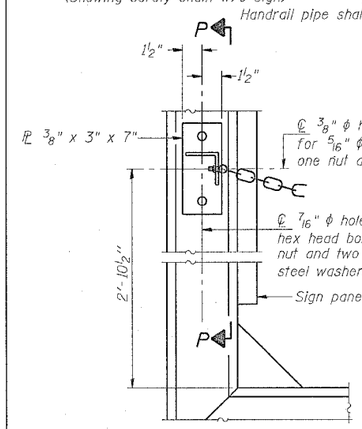

ALTERNATE SAFETY CHAIN ATTACHMENT

(With Sign Present)

Items not shown same as "Side Elevation" of "Handrail Details"

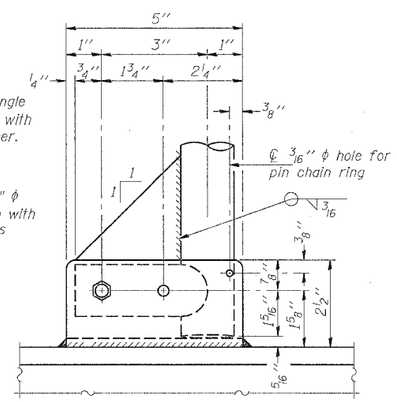

SIDE ELEVATION

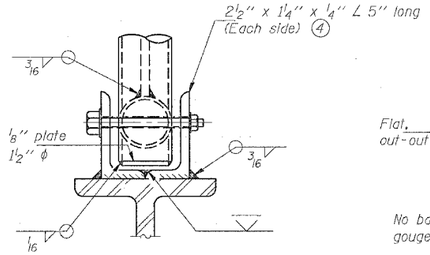

FRONT ELEVATION

See "ELEVATION" at right for dimensions.

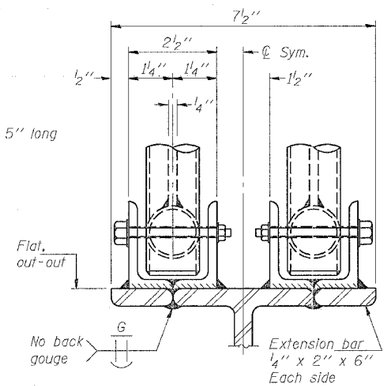

ELEVATION AT HANDRAIL JOINT (4)

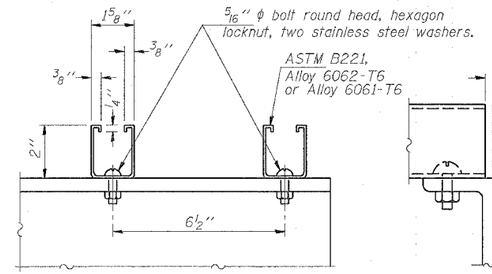

SECTION F-F

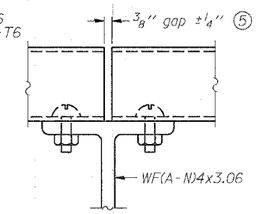

SECTION G-G

LIGHTING FIXTURE MOUNTS (IF REQUIRED)

(5) Field cut ends of light support channels shall be free of burrs or hazardous projections and coated with zinc-rich primer or equivalent.

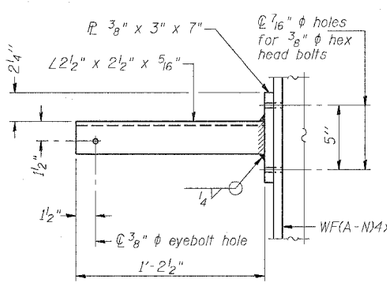

SECTION P-P

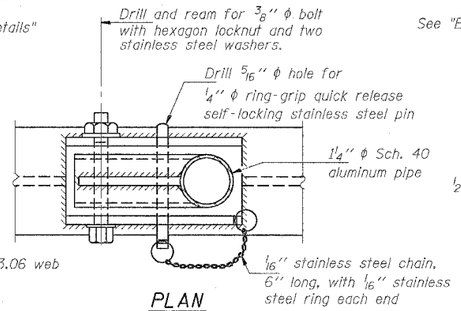

PLAN

DETAIL E HANDRAIL HINGE

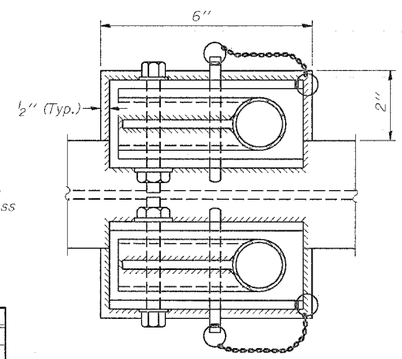

PLAN AT HANDRAIL JOINT

Details not shown same as "PLAN"

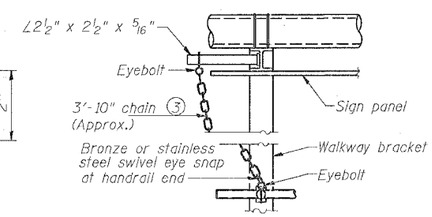

ALTERNATE SAFETY CHAIN ATTACHMENT

Details not shown similar to "Safety Chain" Details (Walkway omitted for clarity)

(3) 3/16" galvanized steel chain, approximately 12 links per foot. Chain to be hot dip galvanized after manufacture and suitable for prolonged exterior exposure. Alternate materials may be substituted with the Engineer's approval.

(4) Extrusions may be used in lieu of the details shown, with approval of the Engineer.

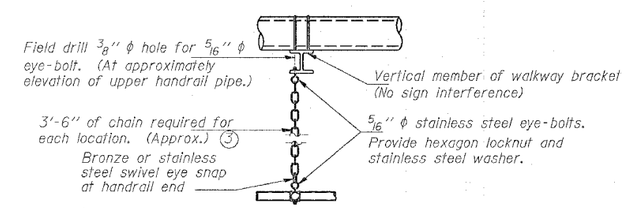

SAFETY CHAIN

One required for each end of each walkway.

NUMBER	REVISION	DATE

OVERHEAD SIGN STRUCTURES
ALUMINUM HANDRAIL DETAILS

REVISIONS NAME	DATE

ILLINOIS DEPARTMENT OF TRANSPORTATION

SCALE: VERT. HORIZ.

DATE

DRAWN BY

CHECKED BY

OS-A-11 11/1/2002

PLOT DATE = Wed Dec 22 13:57:05 2004
FILE NAME = C:\Documents and Settings\houtch.org\Desktop\bailway northbound\7590\sign sheets.dgn
PLOT SCALE = 20.0000 ' / IN.
REFERENCE = REF