F.A.P. RTE.	SECTION	COUNTY	TOTAL SHEETS	SHEET NO.
310	43RS-3;87-1RS-2	SCHUYLER	39	25
FED. ROAD DIST. NO.	ILLINOIS	FED. AID PROJECT		

CONTRACT 72772

• (87-1)I-1, TS-2

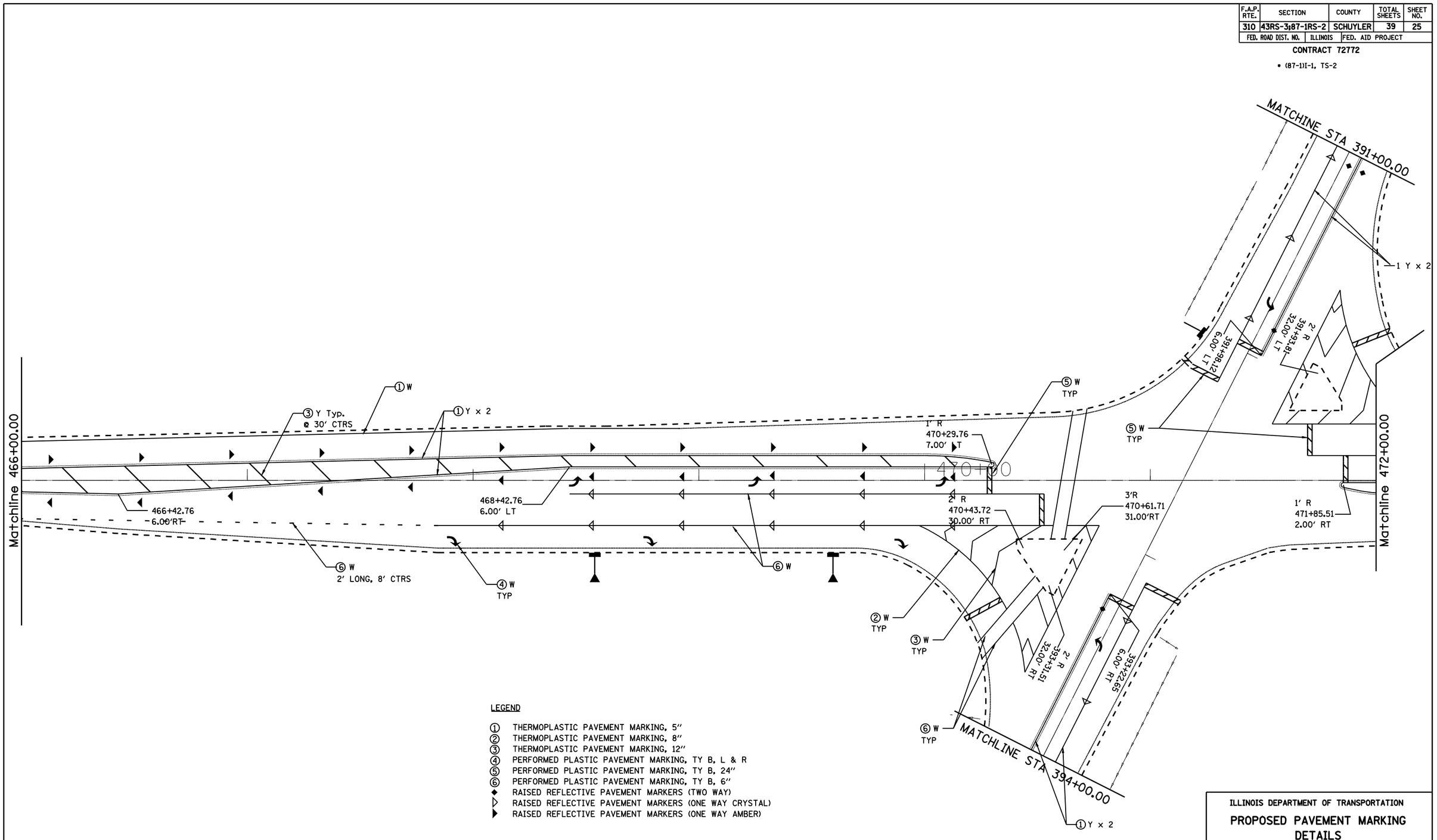

LEGEND

① THERMOPLASTIC PAVEMENT MARKING, 5"
② THERMOPLASTIC PAVEMENT MARKING, 8"
③ THERMOPLASTIC PAVEMENT MARKING, 12"
④ PERFORMED PLASTIC PAVEMENT MARKING, TY B, L & R
⑤ PERFORMED PLASTIC PAVEMENT MARKING, TY B, 24"
⑥ PERFORMED PLASTIC PAVEMENT MARKING, TY B, 6"
◆ RAISED REFLECTIVE PAVEMENT MARKERS (TWO WAY)
▷ RAISED REFLECTIVE PAVEMENT MARKERS (ONE WAY CRYSTAL)
▶ RAISED REFLECTIVE PAVEMENT MARKERS (ONE WAY AMBER)

ILLINOIS DEPARTMENT OF TRANSPORTATION

PROPOSED PAVEMENT MARKING DETAILS

F.A.P. ROUTE 310 (U.S. 67)
SECTION 43RS-3; 87-1RS-2
SCHUYLER COUNTY

c:\pw_work\PWIDOT\LAUGHLINRL\dms23072\sht_pavtelev_e0038.dgn
Feb-06-2009 02:20:35PM
•REF-CAMB
•REF-CAMC
•REF-
•REF-